MOUNTING AND
OPERATING INSTRUCTIONS

EB 8340 EN

Translation of original instructions



Type 3274 Electrohydraulic Actuator

Edition December 2021

Note on these mounting and operating instructions

These mounting and operating instructions assist you in mounting and operating the device safely. The instructions are binding for handling SAMSON devices. The images shown in these instructions are for illustration purposes only. The actual product may vary.

➔ For the safe and proper use of these instructions, read them carefully and keep them for later reference.

➔ If you have any questions about these instructions, contact SAMSON's After-sales Service (aftersalesservice@samsongroup.com).

Documents relating to the device, such as the mounting and operating instructions, are available on our website at ***www.samsongroup.com*** **>** ***DOWNLOADS*** **>** ***Documentation***.

Definition of signal words

⚠ DANGER

Hazardous situations which, if not avoided, will result in death or serious injury

⚠ WARNING

Hazardous situations which, if not avoided, could result in death or serious injury

NOTICE

Property damage message or malfunction

Note

Additional information

Tip

Recommended action

1 Safety instructions and measures 1-1
1.1 Notes on possible severe personal injury 1-4
1.2 Notes on possible personal injury 1-5
1.3 Notes on possible property damage 1-6

2 Markings on the device 2-1
2.1 Nameplate 2-1

3 Design and principle of operation 3-1
3.1 Fail-safe action 3-1
3.2 Versions 3-3
3.3 Additional equipment 3-3
3.3.1 Combination of options 3-4
3.4 Priority circuit (version with positioner) 3-5
3.5 Direction of action (version with positioner) 3-5
3.6 Position feedback signal (version with positioner) 3-5
3.7 Using the positioner as a position transmitter 3-5
3.8 Technical data 3-6
3.9 Dimensions 3-8

4 Shipment and on-site transport 4-1
4.1 Accepting the delivered goods 4-1
4.2 Removing the packaging from the actuator 4-1
4.3 Transporting the actuator 4-1
4.4 Lifting the actuator 4-1
4.5 Storing the actuator 4-2

5 Installation 5-1
5.1 Installation conditions 5-1
5.2 Preparation for installation 5-3
5.3 Mounting the actuator 5-3
5.4 Retrofitting limit contacts 5-5
5.5 Installing the resistance transmitters 5-8
5.6 Using the positioner as a position transmitter 5-8
5.7 Electrical connection 5-9

6 Operation 6-1
6.1 Device overview and operating controls 6-1
6.2 Manual override 6-2
6.3 Adjusters and slider switches 6-3

Contents

7	**Start-up**	**7-1**
7.1	Version with three-step signal	7-1
7.2	Calibrating the positioner	7-1
7.3	Calibrating the position transmitter	7-6
7.4	Adjusting the limit contacts	7-7
7.5	Adjusting the resistance transmitter	7-8
8	**Operation**	**8-1**
8.1	Three-step control	8-1
8.2	Positioner	8-1
8.3	Manual mode	8-1
9	**Malfunctions**	**9-1**
9.1	Emergency action	9-1
10	**Servicing**	**10-1**
11	**Decommissioning**	**11-1**
12	**Removal**	**12-1**
13	**Repairs**	**13-1**
13.1	Returning the actuator to SAMSON	13-1
14	**Disposal**	**14-1**
15	**Certificates**	**15-1**
16	**Appendix**	**16-1**
16.1	Parts for retrofitting and accessories	16-1
16.2	After-sales service	16-2

1 Safety instructions and measures

Intended use

The Type 3274 Electrohydraulic Actuator is designed to operate a mounted globe valve used in industrial applications as well as in heating, ventilation and air-conditioning systems. Three-step control or the positioner ensures a predetermined assignment of the valve position to the input signal. The actuator is designed to operate under exactly defined conditions (e.g. thrust, travel). Therefore, operators must ensure that the actuator is only used in operating conditions that meet the specifications used for sizing the actuator at the ordering stage. In case operators intend to use the actuator in applications or conditions other than those specified, contact SAMSON.

SAMSON does not assume any liability for damage resulting from the failure to use the device for its intended purpose or for damage caused by external forces or any other external factors.

➔ Refer to the technical data for limits and fields of application as well as possible uses. See the 'Design and principle of operation' chapter.

Reasonably foreseeable misuse

The actuator is not suitable for the following applications:

- Use outside the limits defined during sizing and by the technical data

Furthermore, the following activities do not comply with the intended use:

- Use of non-original spare parts
- Performing service and repair work not described

Qualifications of operating personnel

The actuator must be mounted, started up, serviced and repaired by fully trained and qualified personnel only; the accepted industry codes and practices must be observed. According to these mounting and operating instructions, trained personnel refers to individuals who are able to judge the work they are assigned to and recognize possible hazards due to their specialized training, their knowledge and experience as well as their knowledge of the applicable standards.

Personal protective equipment

No personal protective equipment is required for the direct handling of the electrohydraulic actuator. Work on the control valve may be necessary when mounting or removing the device.

➔ Observe the requirements for personal protective equipment specified in the valve documentation.

➔ Check with the plant operator for details on further protective equipment.

Revisions and other modifications

Revisions, conversions or other modifications of the product are not authorized by SAMSON. They are performed at the user's own risk and may lead to safety hazards, for example. Furthermore, the product may no longer meet the requirements for its intended use.

Safety devices

The limit switches automatically switch off the motor in the end positions (depending on the actuator version). In actuators with fail-safe action, the actuator stem moves to a defined end position upon supply voltage failure. The direction of the fail-safe action is specified on the nameplate of SAMSON actuators.

Warning against residual hazards

To avoid personal injury or property damage, plant operators and operating personnel must prevent hazards that could be caused in the control valve by the process medium, the operating pressure, the signal pressure or by moving parts by taking appropriate precautions. Plant operators and operating personnel must observe all hazard statements, warnings and caution notes in these mounting and operating instructions, especially for installation, start-up and service work.

Responsibilities of the operator

Operators are responsible for proper use and compliance with the safety regulations. Operators are obliged to provide these mounting and operating instructions to the operating personnel and to instruct them in proper operation. Furthermore, operators must ensure that operating personnel or third parties are not exposed to any danger.

Responsibilities of operating personnel

Operating personnel must read and understand these mounting and operating instructions as well as the specified hazard statements, warnings and caution notes. Furthermore, operating personnel must be familiar with the applicable health, safety and accident prevention regulations and comply with them.

Referenced standards, directives and regulations

The Type 3274 Electrohydraulic Actuator with a CE marking fulfills the requirements of the Directives 2014/30/EU and 2014/35/EU.

The declaration of conformity is included in the 'Certificates' chapter of these mounting and operating instructions.

The Type 3274 Electrohydraulic Actuator is designed for use in low voltage installations.

➔ For wiring, maintenance and repair, observe the relevant safety regulations.

Referenced documents

The following documents apply in addition to these mounting and operating instructions:

- Mounting and operating instructions of the valve (e.g. for SAMSON valves) on which the electrohydraulic actuator is mounted
  - EB 5861 for Type 3260 Three-way Valve
  - EB 5868-1 for Type 3214 Globe Valve balanced by a diaphragm
  - EB 8012 for Type 3241 Globe Valve, ANSI and JIS version
  - EB 8015 for Type 3241 Globe Valve, DIN version
  - EB 8026 for Type 3244 Three-way Valve
  - EB 8051 for Type 3251 Globe Valve, DIN version
  - EB 8052 for Type 3251 Globe Valve, ANSI version

1.1 Notes on possible severe personal injury

⚠ DANGER

Risk of fatal injury due to electric shock.

➔ Before connecting wiring, performing any work on the device or opening the device, disconnect the supply voltage and protect it against unintentional reconnection.

➔ Only use power interruption devices that can be protected against unintentional reconnection of the power supply.

➔ Do not remove any covers to perform adjustment work on live parts.

Risk of bursting in pressure equipment.

Control valves and pipelines are pressure equipment. Improper opening can lead to valve components bursting.

➔ Before starting any work on the control valve, depressurize all plant sections affected as well as the valve.

➔ Drain the process medium from all the plant sections affected and from the valve.

➔ Wear recommended personal protective equipment (see associated valve documentation).

1.2 Notes on possible personal injury

⚠ WARNING

Crush hazard arising from moving parts.

The electrohydraulic actuator contains moving parts (actuator and plug stems), which can injure hands or fingers if inserted into the actuator.

➔ Do not insert hands or fingers into the yoke while the valve is in operation.

➔ Disconnect the supply voltage and protect it against unintentional reconnection before performing any work on the control valve.

➔ Do not impede the movement of the actuator or plug stem by inserting objects into their path.

Risk of personal injury due to incorrect operation, use or installation as a result of information on the actuator being illegible.

Over time, markings, labels and nameplates on the actuator may become covered with dirt or become illegible in some other way. As a result, hazards may go unnoticed and the necessary instructions not followed. There is a risk of personal injury.

➔ Keep all relevant markings and inscriptions on the device in a constantly legible state.

➔ Immediately renew damaged, missing or incorrect nameplates or labels.

1.3 Notes on possible property damage

NOTICE

Risk of damage to the electrohydraulic actuator due to the supply voltage exceeding the permissible tolerances.

The Type 3274 Electrohydraulic Actuator is designed for use according to regulations for low-voltage installations.

➔ Observe the permissible tolerances of the supply voltage.

Risk of damage to the electrohydraulic actuator due to over-torquing.

Observe the specified torques when tightening the mounting parts of Type 3274 Electrohydraulic Actuators. Excessive tightening torques lead to parts wearing out more quickly.

➔ Observe the specified tightening torques.

Risk of damage to the electrohydraulic actuator due to incorrect operation of the mechanical override.

The actuator stem of the electrohydraulic actuator can be moved manually in the version with mechanical override.

➔ Do not operate the manual override while the actuator is in operation or while the voltage supply is still connected.

Unauthorized activation of the electric override will affect the control process while the process is running.

The actuator stem of the electrohydraulic actuator can be moved manually in the version with electric override.

➔ Only activate the manual override after consulting the plant operator.

➔ Isolate the valve, if necessary.

Risk of damage to the electrohydraulic actuator due to unauthorized opening of the top housing cover.

Do not open the top housing cover. It is part of the pressure-tight actuator housing, which also serves as the oil reservoir. Once the cover has been opened, the proper functioning of the electrohydraulic actuator is no longer guaranteed.

➔ Do not open the top housing cover.

2 Markings on the device

2.1 Nameplate

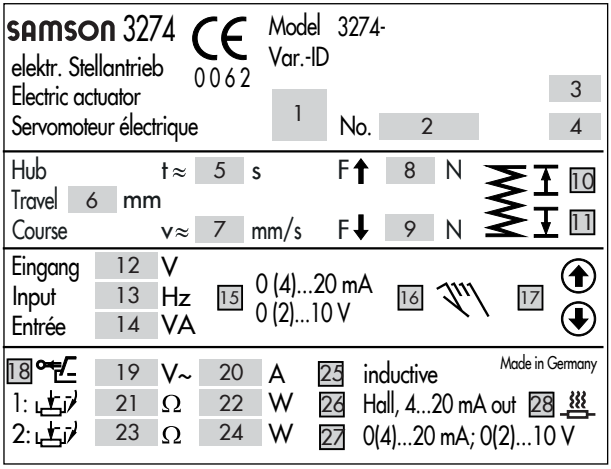

1 Test mark
2 Serial number
3 Month of manufacture
4 Year of manufacture
5 Transit time for rated travel
6 Rated travel
7 Stroking speed
8 Thrust (actuator stem retracts)
9 Thrust (actuator stem extends)
10 Fail-safe action symbol: stem retracts
11 Fail-safe action symbol: stem extends
12 Supply voltage
13 Power line frequency
14 Power consumption at rated voltage
15 Positioner information
16 Mechanical override symbol
17 Electric override symbol
18 Number of mechanical limit contacts
19 Perm. voltage (mechanical limit contacts)
20 Perm. current (mechanical limit contacts)
21 Resistance transmitter 1: resistance
22 Resistance transmitter 1: rated capacity
23 Resistance transmitter 2: resistance
24 Resistance transmitter 2: rated capacity
25 Number of inductive limit contacts
26 Hall sensor information
27 Position transmitter information
28 Heating symbol

3 Design and principle of operation

The electrohydraulic actuator is used to position Series 240, 250 and 280 Control Valves.

The actuator is fastened to the valve bonnet with a ring nut. The actuator and plug stems are fastened together by a stem connector. The actuator mainly consists of the actuator housing, motor with oil pump and cylinder housing with piston.

To control switching and indicating components, the actuator travel is converted into a rotary motion by a rack-and-pinion gear and transferred to an actuator shaft.

Principle of operation

➔ See Fig. 3-1 on page 3-2.

Pilot valves regulate the flow of oil to and from the piston. The actuator is equipped with compression springs which determine the positioning forces. Actuator versions with spring mechanism also serve to move valve to the fail-safe position "actuator stem retracts" or "actuator stem extends" in the event of a supply voltage failure.

The pressure-tight actuator housing (1), which also serves as the oil reservoir, contains the cylinder housing (2), cylinder (5.1) and piston (5.2), motor (6.1), pump (6.2) and solenoid pilot valves (6.4).

The oil pump (6.2) driven by the motor (6.1) feeds compressed oil to the corresponding cylinder chamber over the check valve (6.3) and pilot valve (6.4). The solenoid valves are closed in the de-energized state and open when a controller output signal is applied. When an end position is reached or when the thrust is too high due to external forces, the motor is switched off.

Actuators with fail-safe action only have one force-dependent switch since these actuators are only moved in the other direction by the force of the springs.

Depending on the version, the actuators have no compression springs or are equipped with one or two compression springs (5.7 and 5.8 in Fig. 3-1). The motor in Types 3274-11, -12, -15, -16 as well as -21 to -23 can only move the stem in one direction. The stem is moved by spring force in the other direction.

3.1 Fail-safe action

Versions with fail-safe action have a spring-return mechanism and an additional safety solenoid valve which opens when the voltage supply is interrupted, reducing the pressure on the cylinder chamber. The spring assembly moves the valve plug to the fail-safe position. The direction of action (actuator stem extends or retracts) depends on how the springs are arranged in the actuator.

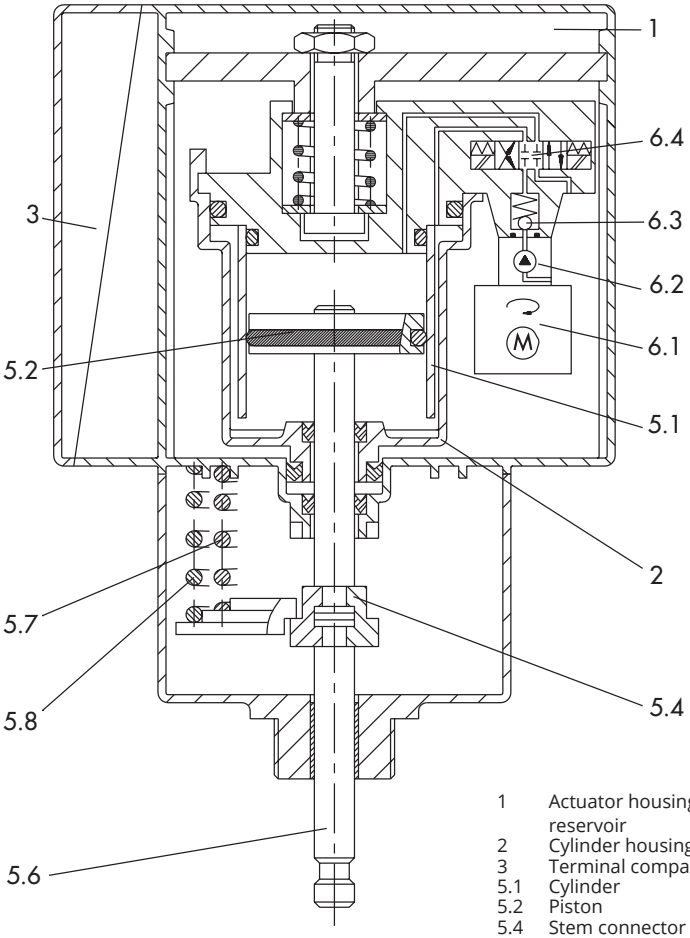

1	Actuator housing with oil reservoir
2	Cylinder housing
3	Terminal compartment
5.1	Cylinder
5.2	Piston
5.4	Stem connector
5.6	Actuator stem
5.7	Compression spring
5.8	Compression spring
6.1	Motor
6.2	Gear pump
6.3	Check valve
6.4	Pilot valve

Fig. 3-1: *Design and principle of operation*

Testing according to DIN EN 14597

The Type 3274-21 and Type 3274-23 Actuators are tested by the German technical surveillance association (TÜV) according to DIN EN 14597 in combination with various SAMSON valves (registration number on request).

3.2 Versions

Depending on the application, the following versions are available (see Chapter 3.8 on page 3-6)

With electric override:

Manual override with two pushbuttons

- Type 3274-14

With mechanical override:

Mechanical override implemented using an Allen key (A/F 24) at the additional gear housing

- Type 3274-18

Versions with fail-safe action and with electric override:

- Type 3274-21
- Type 3274-22
- Type 3274-23

3.3 Additional equipment

Positioner

The positioner compares the 0/4 to 20 mA or 0/2 to 10 V control signal issued by the controller with the position of a potentiometer which is proportional to the travel. The actuator stem is moved to the position determined by the positioner.

The input signal results in an output signal of 0/4 to 20 mA or 0/2 to 10 V.

Priority circuit

The version with positioner is fitted with a priority circuit, which is activated at terminals 82 and 83 (see the 'Installation' chapter).

Position transmitter

The version with three-step control can be fitted with a position transmitter. A potentiometer (0 to 1000 Ω) is used to issue a 0/4 to 20 mA or 0/2 to 10 V output signal, which is proportional to the travel.

Mechanical limit contacts

The actuator can be fitted with a maximum of three mechanical changeover switches. They are actuated by continuously adjustable cam disks. The floating contacts can be used as either make or break contacts to influence the tasks of control equipment.
The installation and adjustment of the mechanical limit contacts is described in the 'Installation' chapter.

Inductive limit contacts

Optionally, the actuator can be equipped with a maximum of two inductive contacts. They are no-wear NC contacts, which are used to influence the tasks of control equipment. Isolating switch amplifiers according to EN 50227 must be installed in the output circuit for the operation of inductive limit contacts.

The inductive limit contacts are not suitable for retrofitting.

Resistance transmitters

The actuator version with three-step control can optionally be equipped with one or two resistance transmitters. They are linked to the gear of the actuator. They consist of one potentiometer, which produces a resistance signal between approx. 0 and 1000 Ω (usable range 0 to 900 Ω) proportional to the travel. It can be used to assess the process of the actuator stem. The resistance transmitters are suitable for retrofitting. The installation and adjustment is described in the 'Installation' chapter.

3.3.1 Combination of options

The actuator can be fitted with the following options:

Table 3-1: *Combination of options*

Accessories									
Positioner	•	•							
Position transmitter			•	•					
Resistance transmitter 1 [1)]	•	•	•	•	•	•	•		
Resistance transmitter 2	•	•	•	•	•	•			
Mechanical limit contact 1								•	•
Mechanical limit contact 2	•		•		•		•		•	
Mechanical limit contact 3	•		•		•		•		•	
Inductive limit contact 1		•		•		•		•		•
Inductive limit contact 2		•		•		•		•		•

[1)] Internal use (with positioner and position transmitter)

3.4 Priority circuit (version with positioner)

The actuator stem moves to a defined end position after the terminals 82 and 83 in the priority circuit are switched. After the connection is interrupted, the actuator stem follows the control signal. The fail-safe action has priority (in actuators with fail-safe action).

3.5 Direction of action (version with positioner)

➔ See Fig. 3-2

Direction of action: increasing/increasing (>>)

The actuator stem moves towards the top end position (stem retracts) as the input signal increases.

Direction of action: increasing/decreasing (<>)

The actuator stem moves towards the lower end position (stem extends) as the input signal increases.

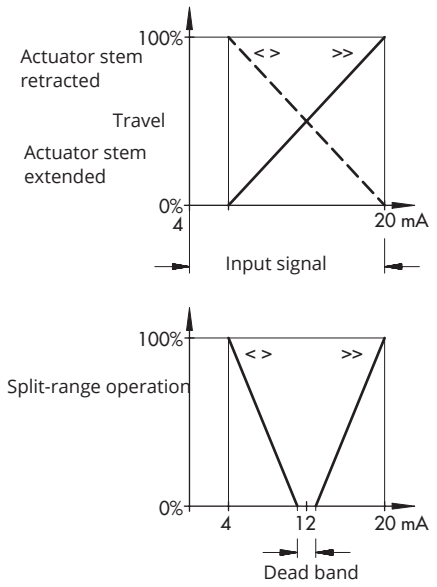

Fig. 3-2: *Characteristics*

3.6 Position feedback signal (version with positioner)

The position feedback signal issues the position as a current or voltage signal proportional to the actuator travel.

3.7 Using the positioner as a position transmitter

The positioner can be used as a position transmitter with three-step control.

3.8 Technical data

Actuator Type 3274		-14	-18	-21	-22	-23
Manual override		Electrical	Mechanical	Electrical		
Fail-safe action		Without		With		
Direction of action: stem retracts		–	–	–	•	–
Direction of action: stem extends				•	–	•
Rated travel		15 or 30 mm				
Transit time for rated travel		60 s with 15 mm travel · 120 s with 30 mm travel				
Stroking speed in mm/s		0.25				
Stroking speed for fail-safe action in mm/s						
	Standard	–	–	1	1	1.3
	Optional			–	3.3	–
Weight		12 kg	15 kg	12 kg		
Supply voltage		230 V and 24 V, 50 Hz (±10 %)				
Power consumption with supply voltage		24 V, 230 V/50 Hz: 90 VA Positioner: 3 VA				
Permissible temperature ranges						
	Ambient	–10 to +60 °C				
	Storage	–25 to +70 °C				
Degree of protection		IP65 according to EN 60529				
Electromagnetic compatibility		According to EN 61326-1, EN 61000-6-2 and EN 61000-6-3				
Conformity		CE				
Thrust in N						
Travel: 15 mm	Retracts	500	500	2100	1800	500
	Extends	7700	7700	2000	2300	3400
Travel: 30 mm	Retracts	500	500	2100	1800	500
	Extends	7300	7300	1800	2100	3000

[1] Not for actuators with 24 V supply voltage

Accessories	
Positioner	Same supply voltage as actuator
Input signal	0/4 to 20 mA, (R_i = 50 Ω) · 0/2 to 10 V DC (R_i = 10 Ω)
Zero shift	0 to 100 %
Change of range	30 to 100 %
Position feedback	0/4 to 20 mA, R_B ≤ 200 Ω · 0/2 to 10 V DC, R_B ≤ 2 kΩ
Hysteresis	Approx. 3 %
Resistance transmitters	0 to 1000 Ω (useable range approx. 80 % of nominal value) perm. load 0.5 W [1]
Mechanical limit contacts	Maximum three separately adjustable changeover switches, max. 250 V AC, 5 A
Inductive limit contacts	SJ2-N proximity switch (NC contact only)
Control circuit	Values corresponding to isolating switch amplifier used
Materials	
Housing and cover	Die-cast aluminum
Cylinder	Hydraulic cylinder tube
Piston	Steel/NBR combination
Piston stem	C45, hard chrome-plated
Actuator stem	1.4104
Hydraulic oil	Special HLP, silicone-free

[1] Further versions for retrofitting on request

Fine-wire fuse

➔ Contact SAMSON's after-sales service (aftersalesservice@samsongroup.com) if you require them.

Actuators with 120 s transit time at 30 mm travel	
Supply voltage	**Fine-wire fuse**
230 V, 50/60 Hz	T1L (1 A slow-acting)
Actuators with 60 s transit time at 30 mm travel (with faster motor)	
Supply voltage	**Fine-wire fuse**
230 V, 50/60 Hz	T1.25 (1.25 A slow-acting)
24 V, 50/60 Hz	T6.3 (6.3 A slow-acting)

3.9 Dimensions

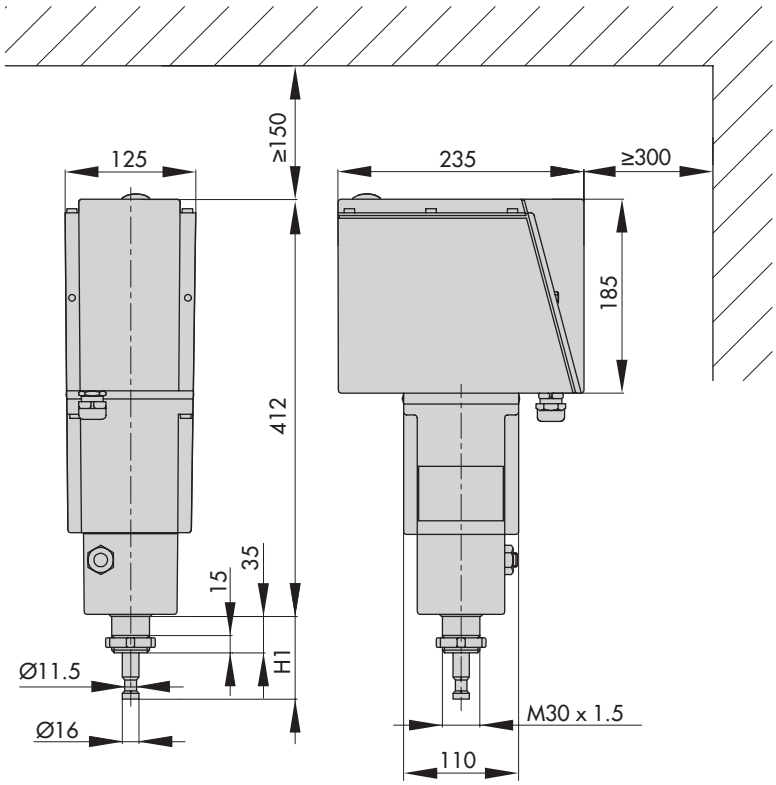

Fig. 3-3: *Dimensions in mm · Actuator with mechanical override*

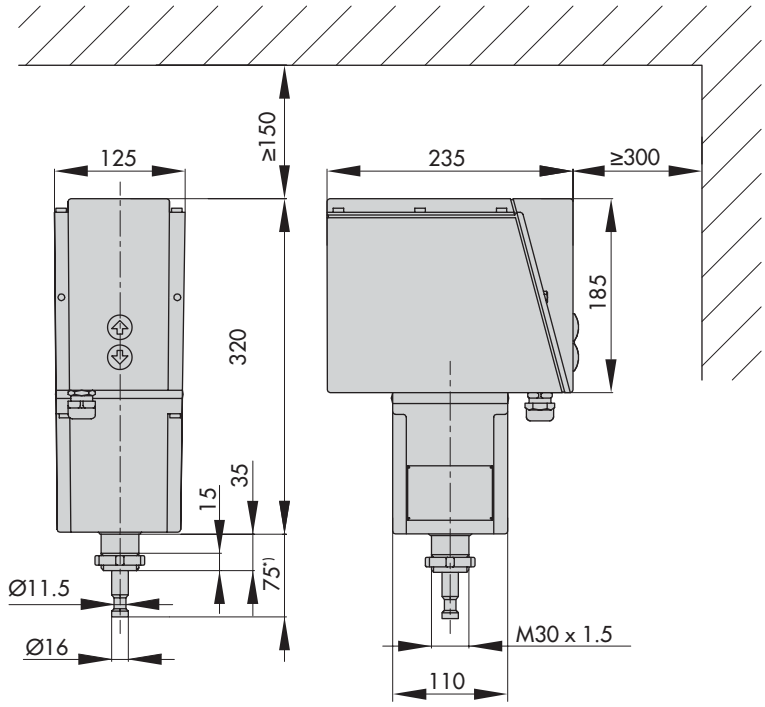

Fig. 3-4: *Dimensions in mm · Actuator with electric override*

4 Shipment and on-site transport

The work described in this chapter is to be performed only by personnel appropriately qualified to carry out such tasks.

4.1 Accepting the delivered goods

After receiving the shipment, proceed as follows:

1. Compare the shipment received with the delivery note.
2. Check the shipment for transportation damage. Report any damage to SAMSON and the forwarding agent (refer to delivery note).

4.2 Removing the packaging from the actuator

i ***Note***

Do not remove the packaging until immediately before mounting and start-up.

1. Removing the packaging from the electrohydraulic actuator
2. Check scope of delivery (see Fig. 4-1).
3. Dispose of the packaging in accordance with the valid regulations.

1x Type 3274 Electrohydraulic Actuator
1x Document IP 8340 (Important Product Information)
1x Accessory 0900-2679, consisting of
- 2x Stem connector for Ø 16 mm stem
- 2x M6 screw
- 1x M30x1.5 ring nut

Fig. 4-1: Scope of delivery

4.3 Transporting the actuator

- Protect the actuator against external influences (e.g. impact).
- Protect the actuator against moisture and dirt.
- Observe the permissible transportation temperature of –25 to +70 °C.

4.4 Lifting the actuator

- Use suitable equipment to lift the actuator.

4.5 Storing the actuator

NOTICE

Risk of electrohydraulic actuator damage due to improper storage.

➔ *Observe the storage instructions.*

➔ *Avoid longer storage periods.*

➔ *Contact SAMSON in case of different storage conditions or longer storage times.*

Note

SAMSON recommends to regularly check the electrohydraulic actuator and the prevailing storage conditions during long storage periods.

Storage instructions

- Protect the electrohydraulic actuator against external influences (e.g. impact).
- Protect the electrohydraulic actuator against moisture and dirt.
- Make sure that the ambient air is free of acids or other corrosive media.
- Observe the permissible storage temperature from –25 to +70 °C.
- Do not place any objects on the electrohydraulic actuator.

5 Installation

The work described in this chapter is to be performed only by personnel appropriately qualified to carry out such tasks.

5.1 Installation conditions

Work position

If not described otherwise in the valve documentation, the work position for the control valve is the front view looking onto the operating controls.

Mounting position

The actuator can be installed in any position. Restriction apply to actuators with mechanical override: see Fig. 5-1.

Note

The mounting position of the valve determines how the actuator is mounted (see associated control valve documentation).

NOTICE

Risk of actuator damage due to adverse weather conditions.

➔ *Do not use the actuator outdoors.*

Tip

SAMSON recommends installing valves in sizes larger than DN 100 upright with the actuator on top of the valve to facilitate valve maintenance.

➔ **Observe the clearance required to remove the cover or entire actuator (see dimensional drawings in the 'Design and principle of operation' chapter).**

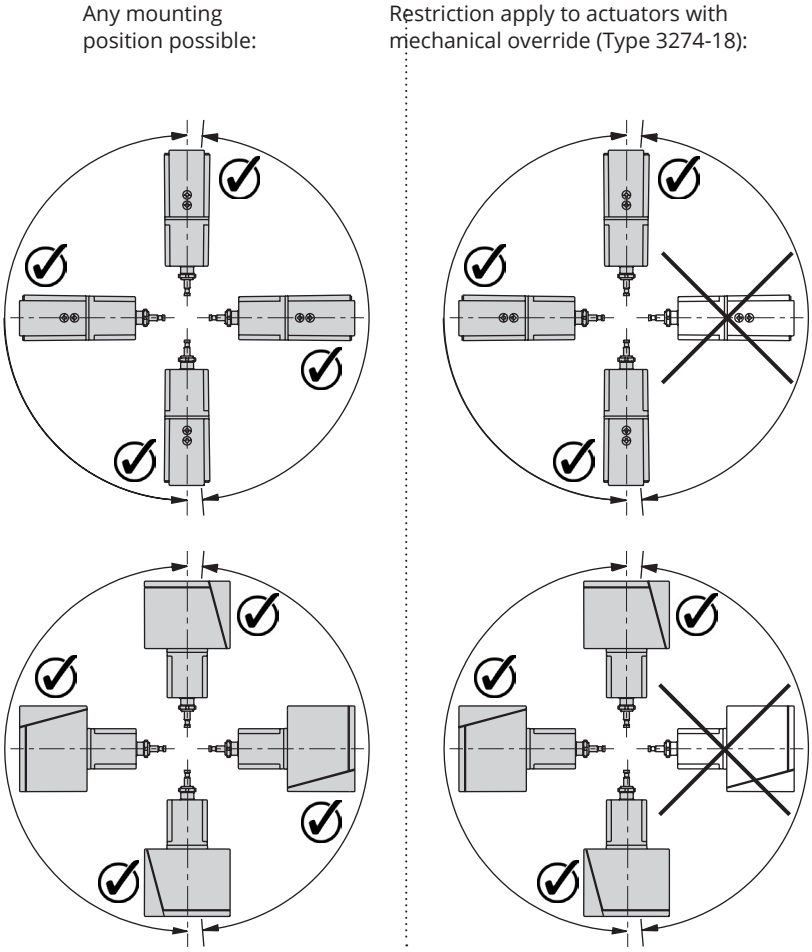

Fig. 5-1: *Permissible/impermissible mounting positions of Type 3274 Actuator*

5.2 Preparation for installation

Before installation, make sure that the following conditions are met:

– The actuator is not damaged.

Proceed as follows:

Lay out the necessary material and tools to have them ready during installation work.

NOTICE

Risk of actuator damage through opening the device.

➔ *Do not unscrew screws on the top housing cover.*

➔ *Do not open the top housing cover.*

5.3 Mounting the actuator

Proceed as follows if the valve and actuator have not been assembled by SAMSON, proceed as follows (Fig. 5-2):

➔ Check whether the actuator stem is retracted.

➔ Perform electrical connections of actuator with electric override (see Chapter 5.7). Disconnect isolating terminal 81 and retract the actuator stem electrically (see the 'Operation' chapter).

➔ For versions with mechanical override, press the button on the top of the housing. Use an Allen key to operate the rack-and-pinion gear to retract the actuator stem.

Note

For versions with "actuator stem extends" fail-safe action, the supply voltage must remain connected to L and N while mounting the actuator to keep the actuator stem in the top end position.

DN 15 to 80 (Series 240)

4. Replace the stem connector nut (9.3) on the valve plug stem (9.5) with an external Ø10 mm with a Ø16 mm nut (order no. 0250-0674).
5. Turn the stem connector nut (9.3) and adjust the dimension x to 75 mm with a closed valve and tighten lock nut (9.4).

Tightening torque	150 Nm

6. Place the actuator onto the valve bonnet and secure using the ring nut (8.1).

Tightening torque	150 Nm

7. Push the plug stem (9.5) upward. Connect the stem connector nut (9.3) and actuator stem (5.6) using the stem connector clamps (8.2) and fasten together using the screws.
8. Move the valve to the end position and align the travel indicator scale (9.2) with the tip of the stem connector.

DN 100 to 150 (Series 240, 250 and 280, K_{VS} 40 to 160)

1. Check dimension x = 90 mm. If necessary, readjust by turning the stem connector nut (9.3).
2. Place actuator onto the valve bonnet and secure using the ring nut (8.1).

Tightening torque	150 Nm

3. Fasten the stem connector nut (9.3) and actuator stem (5.6) to the stem connector clamps (8.2).
4. Move the actuator stem to the lower end position. Align the travel indicator scale (9.2) with the middle of the stem connector (8.2) and screw tight.

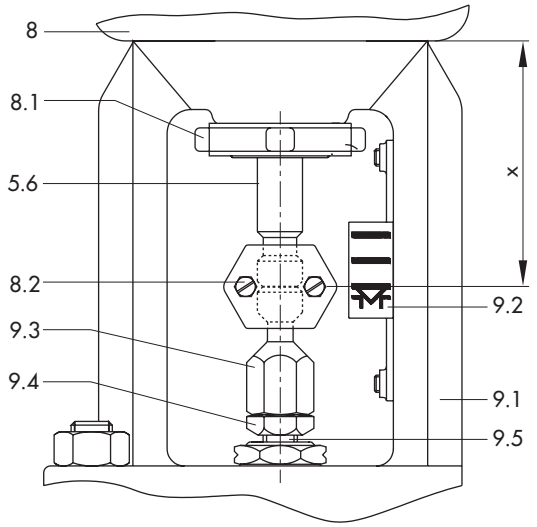

8 Actuator
8.1 Ring nut
5.6 Actuator stem
8.2 Stem connector
9.1 Valve bonnet
9.2 Travel indicator scale
9.3 Stem connector nut
9.4 Lock nut
9.5 Plug stem

Fig. 5-2: Attachment to the valve

5.4 Retrofitting limit contacts

To install the limit contacts, the following retrofit parts are required depending on the equipment:

- Basic unit: order no. 1690-1201
- Mechanical limit contacts: order no. 1690-1206

Note

The basic unit is only required when the actuator does not yet contain limit contacts, resistance transmitters, positioner or position transmitter.

Depending on the version, a maximum of three limit contacts can be installed (see the 'Design and principle of operation' chapter). When only one or two contacts are used, we recommend mounting a switch carrier first and leave the bottom mounting space free. This facilitates connection of the single wires.

Installing the basic unit

1. Open the side housing cover.
2. Place the gear rack on the control rod in the actuator and secure it against displacement with the retaining washer (3).
3. Align the gear rack.
4. For retrofitting positioners, position transmitters and resistance transmitters, mount the required potentiometer on the potentiometer carrier. Mount the potentiometer carrier together with the plugged-on shaft.

Mounting the mechanical limit contact

1. Install the switch carrier.
2. Mount the contact cam and fasten with the hexagonal wrench included in the delivery.
3. Insert the switch unit.
4. Install the switch carrier above the switch.

Tip

When a positioner or position transmitter is installed, we recommend unfastening them to make sufficient space for mounting the switch carrier.

5. Refasten the positioner or position transmitter.
6. Connect the wiring as shown in Chapter 5.7.
7. Refasten the side housing cover.

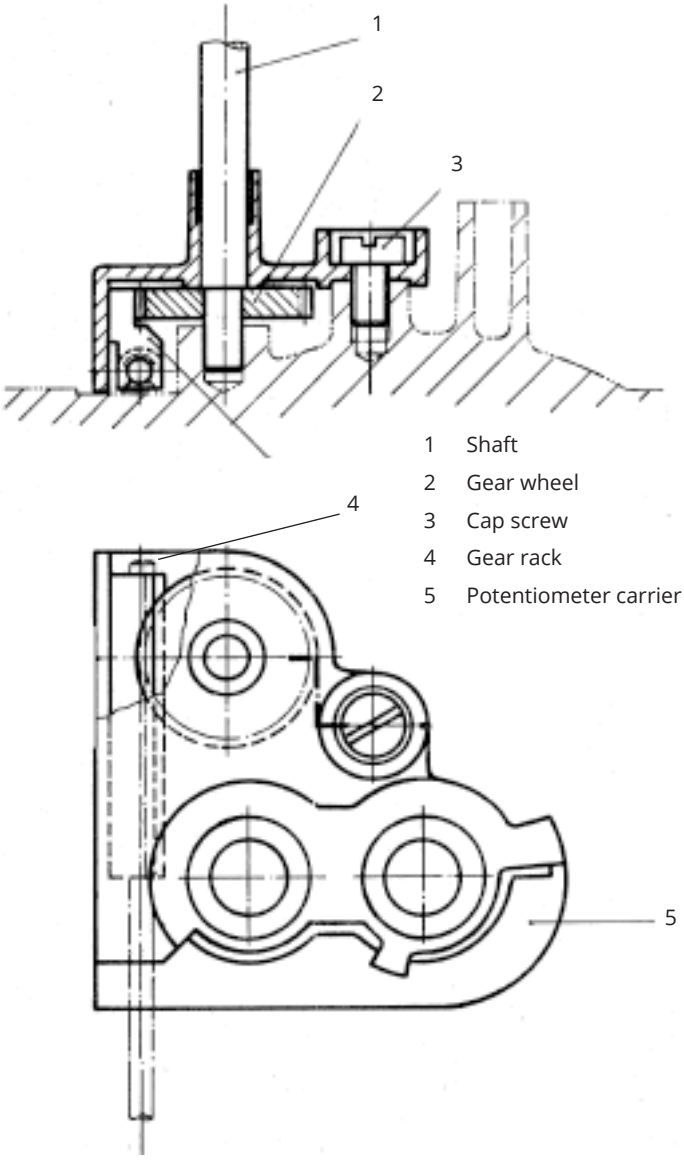

Fig. 5-3: *Basic unit (1690-1201)*

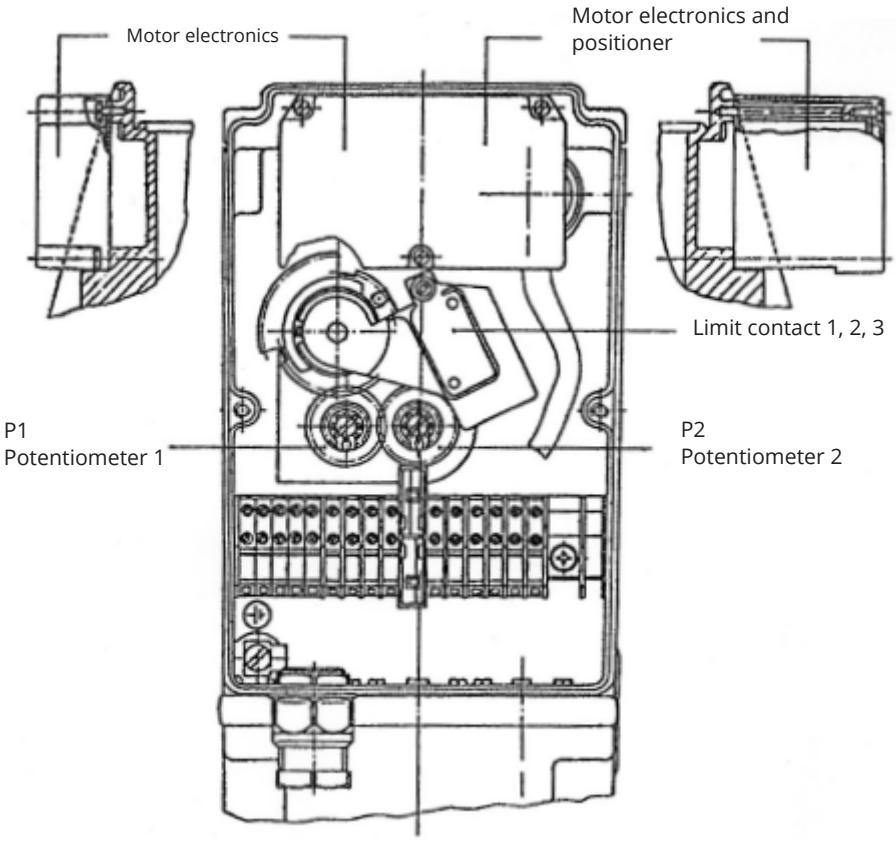

Fig. 5-4: *Terminal compartment with the housing cover removed*

5.5 Installing the resistance transmitters

To install a resistance transmitter, the following retrofit parts are required depending on the equipment:

- Basic unit: order no. 1690-1201
- Resistance transmitter 1: order no. 1690-1204
- Resistance transmitter 2: order no. 1690-1205
- Gear segment: order no. 1690-1202

➔ Install the basic unit (see Chapter 5.4).

1. Open the side housing cover.
2. Install the potentiometer into the potentiometer carrier (5).

Tip

We recommend installing the potentiometer into the potentiometer carrier before mounting it.

Note

The fastening of the resistance transmitter also serves as a sliding clutch. Therefore, the fastening nut must not be tightened too far and must be secured with locking lacquer.

3. Plug the stranded wires on the contacts of the potentiometer.
4. Secure the potentiometer carrier.
5. Slide the potentiometer pinion onto the potentiometer.
6. Slide the segment gear onto the shaft (4).
7. Adjust potentiometer as described in the 'Start-up' chapter.
8. Mount the locking spring of the potentiometer.
9. Refasten the side housing cover.

5.6 Using the positioner as a position transmitter

1. Disconnect the wires leading to the terminals aL and eL.

➔ Make sure that the disconnected wires are properly insulated (e.g. by using installation clamps).

2. Wire the conductors of the external three-step control signal (controller) to the terminals aL, eL and 81.

Note

The terminals 11, 12 and 13 as well as the priority circuit at terminals 82 and 83 do not function when a positioner is used as a position transmitter.

5.7 Electrical connection

⚠ DANGER

Risk of fatal injury due to electric shock.

➔ *Upon installation of the electric cables, you are required to observe the regulations concerning low-voltage installations according to DIN VDE 0100 as well as the regulations of your local power supplier.*

➔ *Use a suitable voltage supply which guarantees that no dangerous voltages reach the device in normal operation or in the event of a fault in the system or any other system parts.*

➔ *Only perform the electrical connection after disconnecting the supply voltage. Make sure the supply voltage cannot be reconnected unintentionally.*

i *Note*

Special motor electronics ensures that the contacts of the controller's output relay (e.g. for three-step control) are protected and only loaded with relatively low control capacities when the actuator is wired according to the circuit diagrams.
The power switching is performed by a TRIAC and a relay in the motor electronics.

How to proceed:

➔ Unscrew and remove the side housing cover. Guide the cables through the cable glands on the housing to the terminals and connect them (see Fig. 5-5 to Fig. 5-7 or circuit diagram stuck inside the housing cover).

If required, two additional cable glands can be mounted after carefully knocking out the blanking plugs.

➔ Connect the grounding conductor to the separate PE terminal on the inside housing wall.

Accessories

The wiring diagrams apply to the accessories (Fig. 5-5 to Fig. 5-7) as well.

➔ Do not connect the limit contacts to the terminal block, but to a separate screw terminal.

For the version with positioner (see Fig. 5-6) and position transmitter (Fig. 5-7), output signals, which are proportional to the valve travel, can be provided at the terminals 31, 32, 33 to be used for position feedback (signal increases as the actuator stem retracts).

➔ Jumper the terminals 31 and 32 when the voltage output is used for position feedback.

Fuse

A holder with a fine-wire fuse (see the 'Design and principle of operation' chapter) on the motor electronics board protects the actuator and contacts of the external controller.

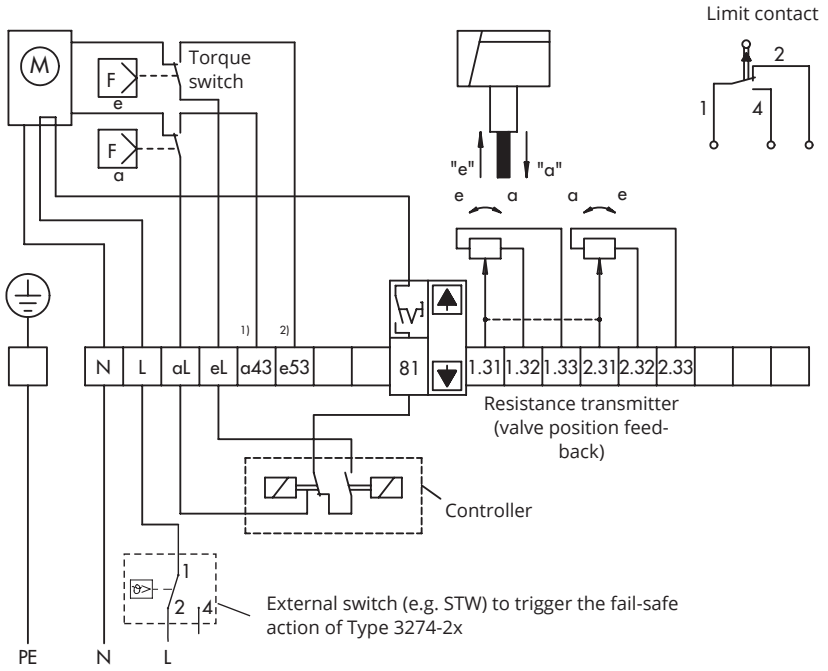

1) 3274-14, -18, -22
2) 3274-14, -18, -21, -23

➔ The controller output which issues the **eL** and **aL** signals must only be supplied over **terminal 81** (internal supply voltage of the actuator).

Fig. 5-5: *Electrical connection for three-step control*

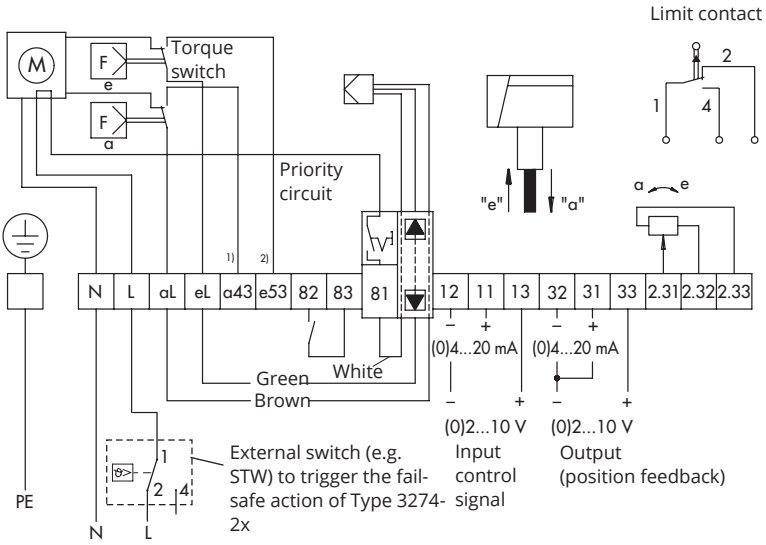

1) 3274-14, -18, -22
2) 3274-14, -18, -21, -23

➔ Jumper the terminals 31 and 32 when 0/2 to 10 V is used for position feedback.

Fig. 5-6: *Electrical connection for version with positioner*

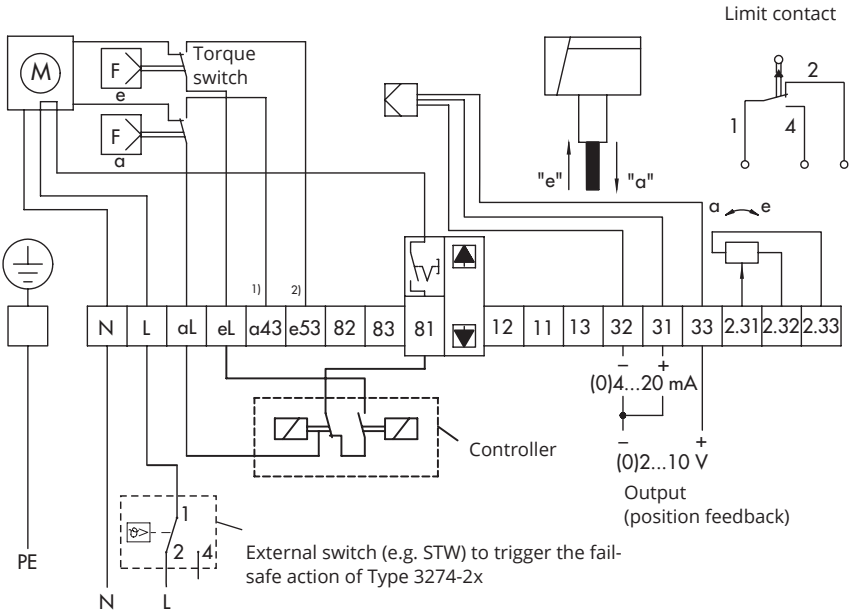

1) 3274-14, -18, -22
2) 3274-14, -18, -21, -23

➔ Jumper the terminals 31 and 32 when 0/2 to 10 V is used for position feedback.

Fig. 5-7: *Electrical connection for three-step version with position transmitter*

6 Operation

6.1 Device overview and operating controls

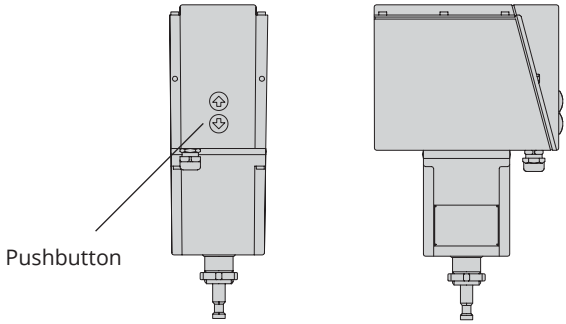

Fig. 6-8: *Operating controls of the electric override*

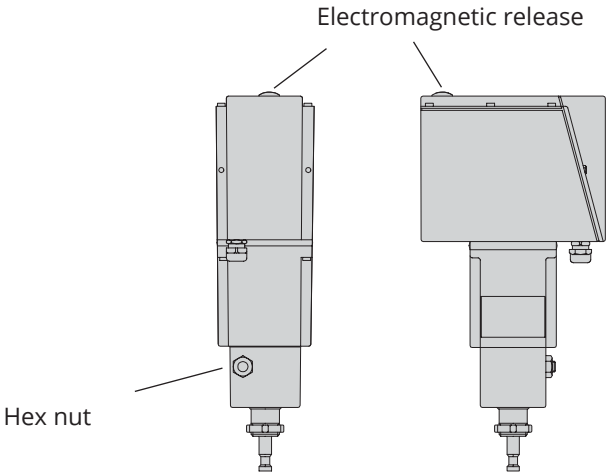

Fig. 6-9: *Operating controls of the mechanical override*

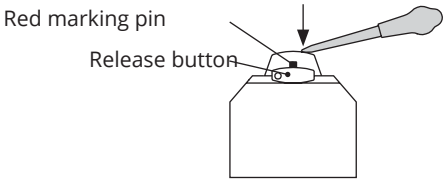

Fig. 6-10: *Isolating terminal 81*

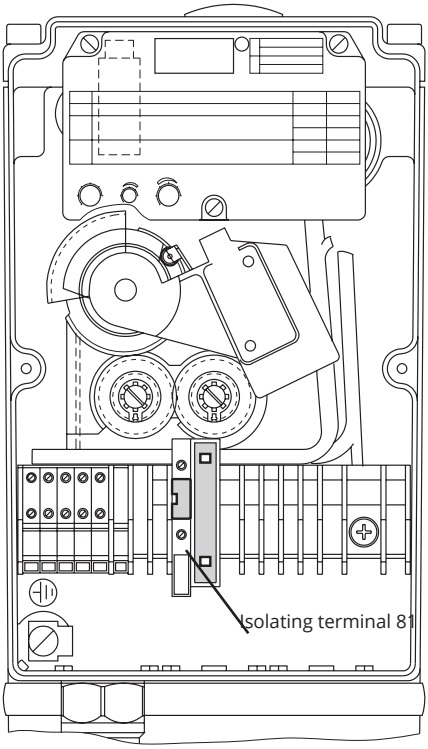

Fig. 6-11: *Terminal compartment with the side housing cover removed*

6.2 Manual override

Disconnect the isolating terminal 81 to make the actuator remain in the adjusted position after the manual override is activated.

Version with electric override

The actuator stem in the actuator version with electric override can be moved by pressing the keys on the housing cover (see the 'Operation' chapter).

Version with mechanical override

The actuator stem in the actuator version with mechanical override can be moved using a wrench (see the 'Operation' chapter).

6.3 Adjusters and slider switches

Adjusters and slider switches are located underneath the side housing cover in the actuator version with positioner.

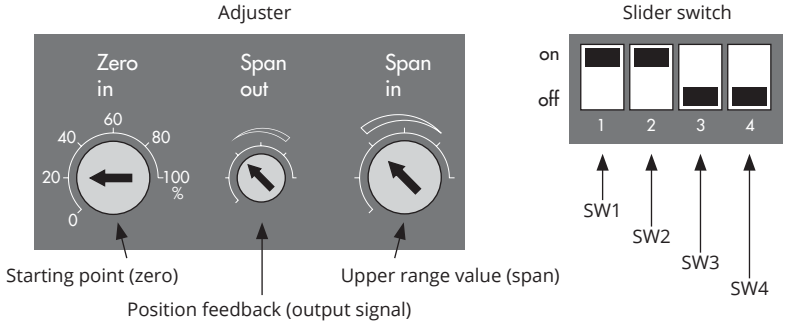

Fig. 6-12: *Adjusters and slider switches*

NOTICE

Risk of actuator damage through opening the device.

➔ *Do not unscrew screws on the top housing cover.*

➔ *Do not remove the top housing cover.*

7 Start-up

The work described in this chapter is to be performed only by personnel appropriately qualified to carry out such tasks.

7.1 Version with three-step signal

No measures are required to start up actuator versions with three-step control.

7.2 Calibrating the positioner

Set the adjusters and slider switches.

⚠ DANGER

Risk of electric shock from exposed live parts.

Do not touch live parts on operating the adjusters and slider switches.

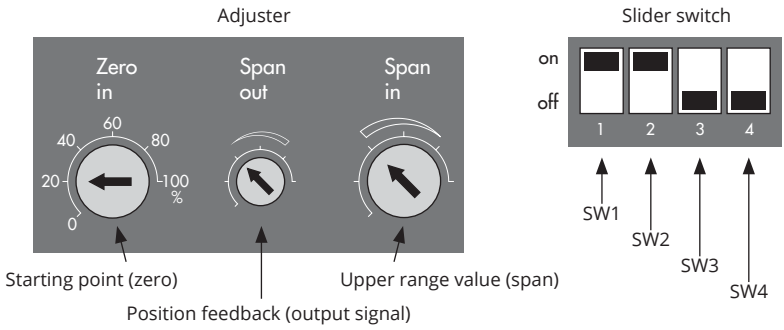

Fig. 7-13: *Adjusters and slider switches*

The following functions can be adjusted with the slider switches SW1 to SW4:

Table 7-1: *Switch positions and their meaning*

	SW1	SW2	SW3	SW4
Priority operation for actuator stem retracts	ON			
Priority operation for actuator stem extends	OFF			
Direction of action increasing/decreasing (<>)		ON		
Direction of action increasing/increasing (>>)		OFF		
Position feedback signal 4 to 20 mA/2 to 10 V			ON	ON
Position feedback signal 0 to 20 mA/0 to 10 V			OFF	OFF

SW1: Priority circuit

The slider switch **SW1** is used to set the direction of the priority circuit to increasing/increasing (>>) or increasing/decreasing (<>).

SW2: Direction of action

The slider switch **SW2** is used to set the direction of action of the actuator.

SW3 and SW4: Position feedback signal

The slider switches **SW3** and **SW4** are used to determine the position feedback signal.

The position feedback signal can be used for the following ranges:

- 4 to 20 mA or 2 to 10 V
- 0 to 20 mA or 0 to 10 V

Settings for direction of action increasing/increasing (>>) and increasing/decreasing (<>):

1. Disconnect isolating terminal 81:

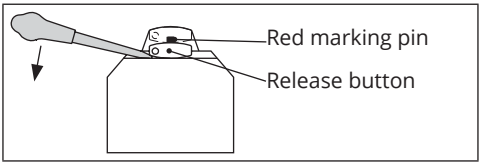

2. Move the actuator stem to the lower end position.
   Actuators with electric override: press button (arrow symbol).
   Actuators with mechanical override: use a wrench.
3. Position the segment gear S1 with the corresponding arrow tip depending on the valve rated travel (15 or 30 mm) pointing towards the axis of the potentiometer P1:

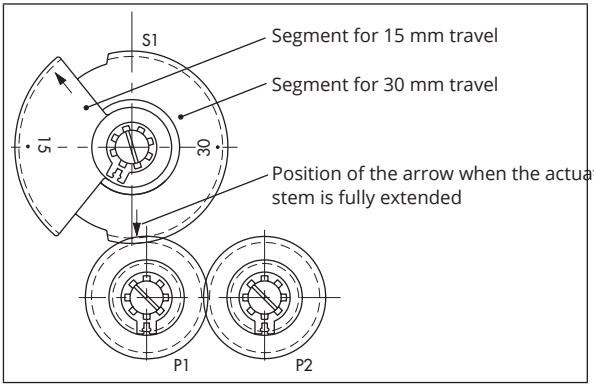

4. Hold the segment gear S1 and turn the axis of potentiometer P1 clockwise using a suitable screwdriver as far as it will go.
5. Connect a suitable current or voltage source to the input signal terminals (11 to 13) according to the wiring diagram. Connect an ammeter to terminals 31 (+) and 32 (–).

Calibration for direction of action increasing/increasing (>>):

1. Set slider switch SW2 to OFF.
2. Turn 'Zero in' adjuster counterclockwise as far as it will go. Turn the 'Span in' adjuster to the middle marking:

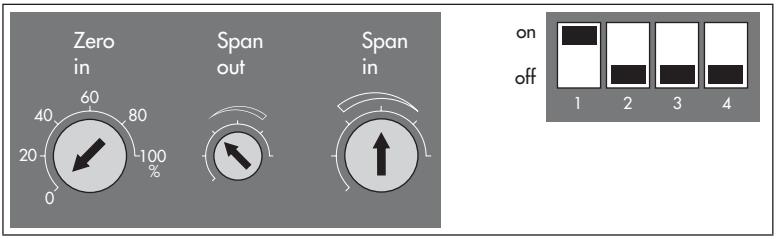

3. Slowly turn the 'Zero in' adjuster clockwise until the LED turns off. Turn it slightly further until the LED lights up again.
4. Use the override to move the valve to the top end position (retract the actuator stem).
5. Set the voltage or current source to 10 V or 20 mA.
6. Turn the 'Span out' adjuster until the output signal is 20 mA.
7. Turn the 'Span in' adjuster counterclockwise until it will go no further, slowly turn it clockwise until the LED blanks out and turn it minimally further until the LED just flashes again
8. Connect isolating terminal 81 or perform further settings for direction of action increasing/decreasing:

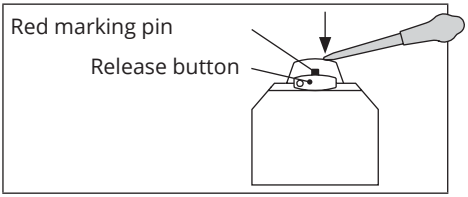

Calibration for direction of action increasing/decreasing (<>):

1. Set slider switch SW2 to ON.
2. Turn 'Zero in' adjuster clockwise as far as it will go:

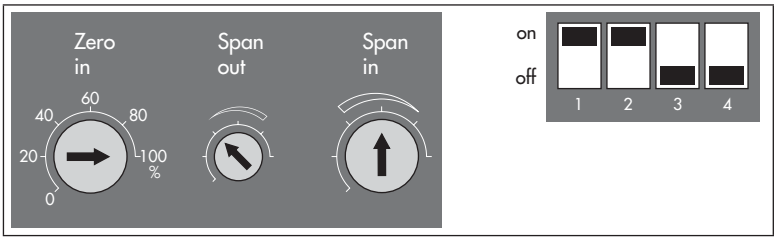

3. Set the input signal to 0 V or 0 mA.
4. Slowly turn the 'Zero in' adjuster clockwise until the LED turns off. Turn it slightly further until the LED lights up again.
5. Connect isolating terminal 81:

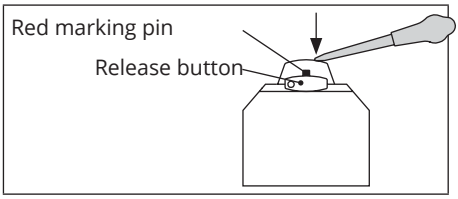

7.3 Calibrating the position transmitter

1. Set the slider switches SW3 and SW4 depending on the required position feedback signal (see Table 7-1):
   SW3 and SW4 to ON: 4 to 20 mA/2 to 10 V
   SW3 and SW4 to OFF: 0 to 20 mA/0 to 10 V
2. Connect an ammeter to terminals 31 (+) and 32 (–) or a voltmeter to terminals 32 (–) and 33 (+) (in this case, after jumpering the terminals 31 and 32).
3. Move the actuator stem to the lower end position (manually or by entering an input signal).
4. Position the segment gear S1 with the corresponding arrow tip depending on the valve rated travel (15 or 30 mm) pointing towards the axis of the potentiometer P1.

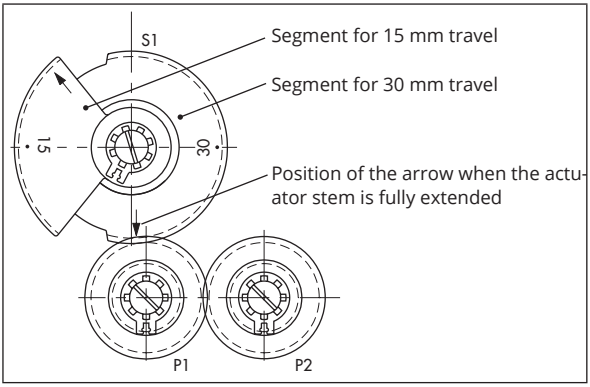

5. Hold the segment gear S1 and turn the axis of potentiometer P1 clockwise using a suitable screwdriver as far as it will go.
6. Turn axis of potentiometer P1 counterclockwise until the required value for the lower end position is measured.
7. Move the actuator stem to the top end position (manually or by entering an input signal).
8. The value for the top end position should be indicated on the measuring instrument. It can be adjusted with the 'Span out' adjuster.

i ***Note***

To reverse the characteristic, swap over the connecting wires (green and white) at the terminals eL and aL.

7.4 Adjusting the limit contacts

A limit contact consists of a changeover switch, which changes its switching position when a contact cam presses the switch downward. Turning the contact cam to continuously adjust the switching range over the travel range as required.

Mechanical limit contact:

1. Move the actuator stem to the position at which the limit contact is to switch.
2. Make fine adjustment by turning the adjustment screw at the contact cam.
3. Check the switching point by stroking the actuator.

Inductive limit contact:

1. Move the valve to the position at which the switching point is to be activated.
2. Turn the adjustment screw until the tag triggers the contact.
3. Check the switching point by stroking the actuator.

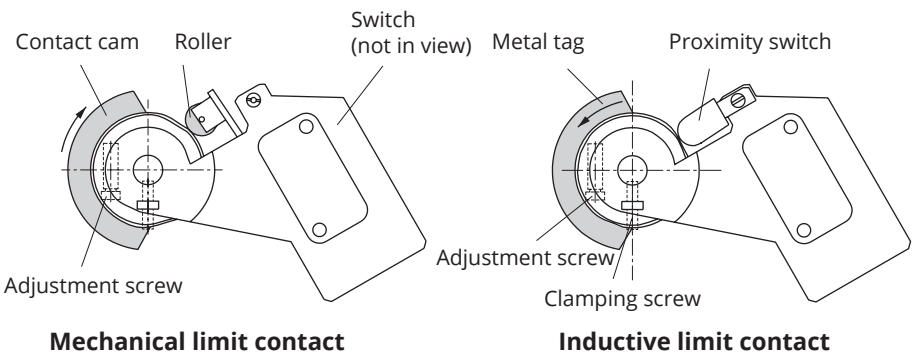

Fig. 7-14: *Limit contacts*

7.5 Adjusting the resistance transmitter

The actuator can be equipped with two resistance transmitters at the maximum. Potentiometer P1 is required for internal position feedback in actuators with positioner or position transmitter. Therefore, external position feedback cannot be used in this case.

Potentiometer P1:

1. Move the actuator stem to the lower end position.
2. Position the segment gear S1 with the corresponding arrow tip depending on the valve rated travel (15 mm or 30 mm) pointing towards the axis of the potentiometer P1.

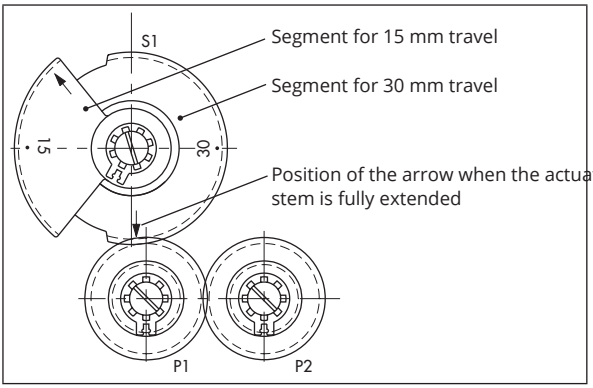

3. Hold the segment gear S1 and turn the axis of potentiometer P1 clockwise using a suitable screwdriver as far as it will go.

Potentiometer P2:

Potentiometer P2 is driven by the pinion of potentiometer P1. Opposed resistance values arise as a result.

➔ Set as described for P1.

➔ Turn potentiometer P2 counterclockwise as far as it will go.

8 Operation

8.1 Three-step control

The actuator stem of the version with three-step signal is moved in the corresponding direction by applying a signal to the terminal eL or aL.

A constant supply voltage must also be applied to the actuator to allow it to operate (see the 'Installation' chapter).

8.2 Positioner

The positioner ensures a predetermined assignment of the valve position to the input signal. The position feedback is provided as a current signal at terminals 31 and 32 and as a voltage signal at terminals 32 and 33 (see the 'Installation' chapter).

i ***Note***

The following applies to split-range operation: to prevent that the valves overlap, a dead band of e.g. ±0.5 mA must be added (see the 'Design and principle of operation' chapter). In this case, valve 1 must be adjusted from 11.5 to 4 mA and valve 2 from 12.5 to 20 mA (corresponding values apply to voltage input signals).

8.3 Manual mode

Electric override

(Types 3274-11 to -14, -22 and -23)

The actuator stem can be retracted or extended by pressing one of the two pushbuttons located on the side housing cover. In this way, the attached valve can be brought into the required position.

After releasing the button, the actuator follows the control signal of the controller again.

i ***Note***

If the priority of the control signal (e.g. upon start-up of the plant) is to be interrupted and the control valve is to remain in a certain position, disconnect the isolating terminal 81 (see Fig. 8-1).

➔ To do this, proceed as follows:

1. Switch off the supply voltage.
2. Unscrew the two fastening screws and remove the side housing cover.
3. Position a screwdriver at the isolating terminal 81 underneath the release button and lever up the button until it engages (the red marking pin is hidden).
4. Refasten the side housing cover.
5. Reconnect the supply voltage.

The control signal is disconnected from the actuator and the valve can be moved to the desired position by using the two **IN** and **OUT** pushbuttons. The valve remains in this position.

If the controller signal is to have priority again, proceed as follow:

1. Switch off the supply voltage and remove the cover.
2. Firmly press down the release button until it engages (the red marking pin reappears).
3. Refasten the side housing cover and reconnect the supply voltage.

Mechanical override

1. Press the black release button at the front of the housing.
2. Insert a hex wrench (A/F 24) into the shaft end protruding from the housing to move the rack-and-pinion gear until the require actuator stem position has been reached.

As soon as the button is released, the actuator reacts again according to the controller signal.

If the valve is to remain in the manually defined position, disconnect the isolating terminal 81.

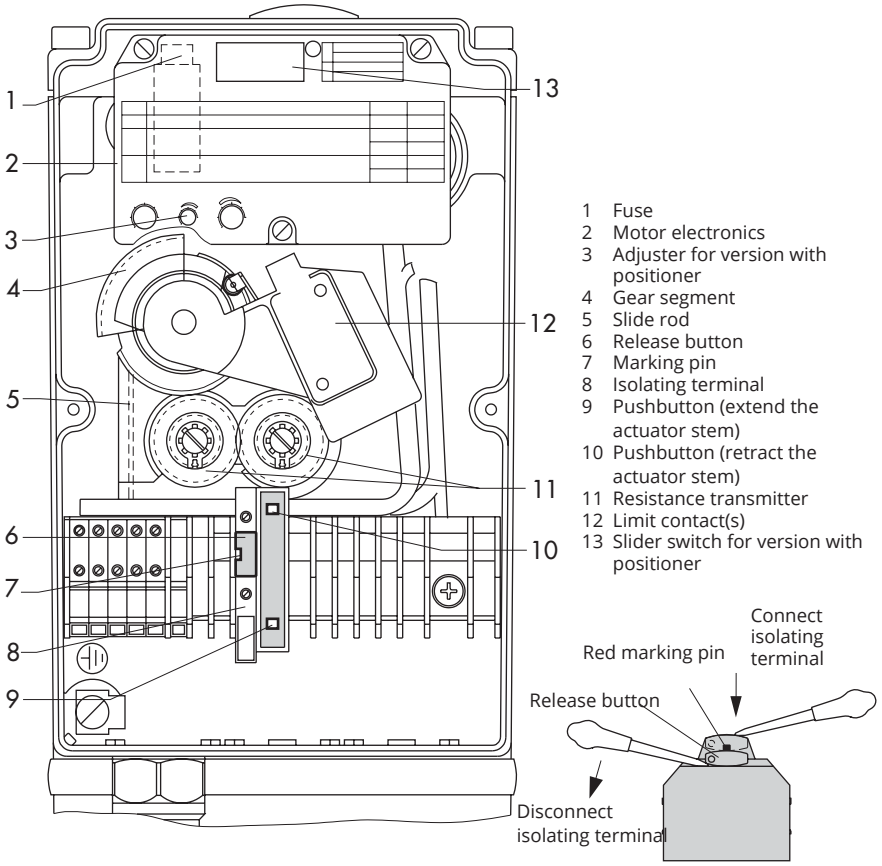

Fig. 8-1: *Terminal compartment with the side housing cover removed*

9 Malfunctions

➔ Troubleshooting (see Table 9-1).

Note

Contact SAMSON's After-sales Service for malfunctions not listed in the table.

Table 9-1: *Troubleshooting*

Malfunction	Possible reasons	Recommended action
Actuator stem does not move.	Actuator is blocked.	➔ Check attachment. ➔ Remove the blockage.
	No or incorrect supply voltage connected.	➔ Check the supply voltage and connections.
Actuator stem does not move through its full range.	No or incorrect supply voltage connected.	➔ Check the supply voltage and connections.

9.1 Emergency action

The valve, on which the actuator with fail-safe action is mounted, is moved to its fail-safe position upon failure of the supply voltage (see the 'Design and principle of operation' chapter).

Plant operators are responsible for emergency action to be taken in the plant.

Tip

Emergency action in the event of valve failure is described in the associated valve documentation.

10 Servicing

i ***Note***

The electrohydraulic actuator was checked by SAMSON before it left the factory.

- *The product warranty becomes void if service or repair work not described in these instructions is performed without prior agreement by SAMSON's After-sales Service.*
- *Only use original spare parts by SAMSON, which comply with the original specifications.*

The actuator requires no maintenance.

11 Decommissioning

The work described in this chapter is to be performed only by personnel appropriately qualified to carry out such tasks.

⚠ DANGER

Risk of fatal injury due to electric shock.

➔ *Before disconnecting live wires at the actuator, switch off the supply voltage and protect it against unintentional reconnection.*

⚠ WARNING

Risk of personal injury due to residual process medium in the valve.

While working on the valve, residual medium can flow out of the valve and, depending on its properties, cause personal injury, e.g. (chemical) burns.

➔ *Wear protective clothing, safety gloves and eye protection.*

⚠ WARNING

Risk of burn injuries due to hot or cold components and pipeline.

Valve components and the pipeline may become very hot or cold. Risk of burn injuries.

➔ *Allow components and pipelines to cool down or warm up to the ambient temperature.*

➔ *Wear protective clothing and safety gloves.*

To put the electrohydraulic actuator out of operation for repair work or disassembly, proceed as follows:

➔ Put the control valve out of operation (see associated valve documentation).

➔ Retract actuator stem.

➔ Disconnect the supply voltage and protect it against unintentional reconnection.

➔ Make sure that a signal from the controller cannot act upon the actuator.

i *Note*

For versions with "actuator stem extends" fail-safe action, the supply voltage must remain connected to prevent the actuator stem extending by itself.

12 Removal

The work described in this chapter is to be performed only by personnel appropriately qualified to carry out such tasks.

⚠ DANGER

Risk of fatal injury due to electric shock.

➔ *Before disconnecting live wires at the actuator, switch off the supply voltage and protect it against unintentional reconnection.*

Actuator without fail-safe action

1. Disconnect the supply voltage and protect it against unintentional reconnection.
2. Make sure that a signal from the controller cannot act upon the actuator. If necessary, disconnect the wires connecting the controller.
3. Disconnect the conductors of the connecting cables at the actuator.
4. Remove the connecting cables.
5. Retract the actuator stem as described in the 'Operation' chapter.
6. Undo the stem connector parts between the plug and actuator stems.
7. Unscrew the ring nut on the valve bonnet.
8. Lift the actuator off the valve.

Actuator with fail-safe action

1. Make sure that a signal from the controller cannot act upon the actuator. If necessary, disconnect the wires connecting the controller.
2. Retract the actuator stem electrically (eL terminal) as described in the 'Operation' chapter.
3. Undo the stem connector parts between the plug and actuator stems.
4. Unscrew the ring nut on the valve bonnet.
5. Lift the actuator off the valve.
6. Disconnect the supply voltage and protect it against unintentional reconnection.

➔ The actuator stem moves to the fail-safe position.

7. Disconnect the conductors of the connecting cables.
8. Remove the connecting cables.

13 Repairs

If the actuator does not function properly according to how it was originally configured or does not function at all, it is defective and must be exchanged.

NOTICE

Risk of actuator damage due to incorrect service or repair work.

➔ *Do not perform any repair work on your own.*

➔ *Contact SAMSON's After-sales Service.*

13.1 Returning the actuator to SAMSON

Defective actuators can be returned to SAMSON for examination.

Proceed as follows to return devices:

1. Remove the electrohydraulic actuator from the valve (see the 'Removal' chapter).
2. Continue as described on our website at ▶ www.samsongroup.com > Service & Support > After-sales Service > Returning goods .

14 Disposal



SAMSON is a producer registered in Europe.
▶ www.samsongroup.com > About SAMSON > Environment, Social & Governance > Material Compliance > Waste electrical and electronic equipment (WEEE)
WEEE reg. no.: DE 62194439

Information on substances listed as substances of very high concern (SVHC) on the candidate list of the REACH regulation can be found in the document "Additional Information on Your Inquiry/Order", which is added to the order documents, if applicable. This document includes the SCIP number assigned to the devices concerned. This number can be entered into the database on the European Chemicals Agency (ECHA) website (▶ https://www.echa.europa.eu/scip-database) to find out more information on the SVHC contained in the device.

Note

SAMSON can provide you with a recycling passport according to PAS 1049 on request. Simply e-mail us at aftersalesservice@samsongroup.com giving details of your company address.

Tip

On request, SAMSON can appoint a service provider to dismantle and recycle the product as part of a distributor take-back scheme.

➔ Observe local, national and international refuse regulations.

➔ Do not dispose of components, lubricants and hazardous substances together with your other household waste.

15 Certificates

The following certificates are included on the next pages:

- EU declaration of conformity
- Declaration of incorporation

The certificates shown were up to date at the time of publishing. The latest certificates can be found on our website:

▶ www.samsongroup.com > Products > Actuators > 3274

EU declaration of conformity

SMART IN FLOW CONTROL.

SAMSON

EU Konformitätserklärung / EU Declaration of Conformity

Für das folgende Produkt / For the following product

Elektrohydraulischer Stellantrieb / Electrohydraulic Actuator

Typ / Type 3274

wird die Konformität mit den nachfolgenden EU-Richtlinien bestätigt / signifies compliance with following EU Directives:

EMC 2004/108/EC (bis/to 2016-04-19) EMC 2014/30/EU (ab/from 2016-04-20)	EN 61000-6-2:2005, EN 61000-6-3:2010, EN 61326-1:2006
LVD 2006/95/EC (bis/to 2016-04-19) LVD 2014/35/EU (ab/from 2016-04-20)	EN 60730-1:2011, EN 61010-1:2010

Hersteller / Manufacturer:

SAMSON AKTIENGESELLSCHAFT
Weismüllerstraße 3
D-60314 Frankfurt am Main
Deutschland/Germany

Frankfurt, 2016-04-06

i.V. Gert Nahler

Gert Nahler
Zentralabteilungsleiter/Head of Department
Entwicklung Automation und Integrationstechnologien/
Development Automation and Integration Technologies

ppa. Scherer

ppa. Günther Scherer
Qualitätssicherung/Quality Managment

ce_3274-0_de_en_rev05.pdf

Declaration of incorporation

DECLARATION OF INCORPORATION
TRANSLATION

Declaration of Incorporation in Compliance with Machinery Directive 2006/42/EC

For the following product:
Type 3274 Actuator

We certify that the Type 3274 Electric Actuator is partly completed machinery as defined in the Machinery Directive 2006/42/EC and that the safety requirements stipulated in Annex I, 1.1.2, 1.1.3, 1.1.5, 1.2.1, 1.2.2, 1.2.3, 1.2.5, 1.2.6, 1.3.1, 1.3.2, 1.3.3, 1.3.4, 1.3.7, 1.3.9, 1.4.1, 1.5.1, 1.5.3, 1.5.4 and 1.5.8 are observed. The relevant technical documentation described in Annex VII, part B has been compiled.

Products we supply must not be put into service until the final machinery into which it is to be incorporated has been declared in conformity with the provisions of the Machinery Directive 2006/42/EC.

Operators are obliged to install the products observing the accepted industry codes and practices (good engineering practice) as well as the mounting and operating instructions. Operators must take appropriate precautions to prevent hazards that could be caused by the process medium and operating pressure in the valve as well as by the signal pressure and moving parts.

The permissible limits of application and mounting instructions for the products are specified in the associated mounting and operating instructions; the documents are available in electronic form on the Internet at www.samsongroup.com.

For product descriptions refer to:
- Type 3274 Electric Actuator: Mounting and Operating Instructions EB 8340

Referenced technical standards and/or specifications:
- VCI, VDMA, VGB: "Leitfaden Maschinenrichtlinie (2006/42/EG) – Bedeutung für Armaturen, Mai 2018" [German only]
- VCI, VDMA, VGB: "Zusatzdokument zum Leitfaden Maschinenrichtlinie (2006/42/EG) – Bedeutung für Armaturen vom Mai 2018" [German only], based on DIN EN ISO 12100:2011-03

Comments:
- See mounting and operating instructions for residual hazards.
- Also observe the referenced documents listed in the mounting and operating instructions.

Persons authorized to compile the technical file:

SAMSON AG, Weismüllerstraße 3, 60314 Frankfurt am Main, Germany
Frankfurt am Main, 10 February 2022

i.V.
Stephan Giesen
Director
Product Management

i.V.
Sebastian Krause
Director
Strategic R&D, Valves and Actuators

Revision no. 01

16 Appendix

16.1 Parts for retrofitting and accessories

Parts for retrofitting	
Basic unit for position feedback	Order no. 1690-1201
Gear segment	Order no. 1690-1202
Resistance transmitter 1	Order no. 1690-1204
Resistance transmitter 2	Order no. 1690-1205
Limit contact	Order no. 1690-1206
Switch carrier	Order no. 1690-1203
Positioner	On request
Position transmitter	On request
Accessories	
Stem connector nut (for valve DN 15 to 80)	Order no. 0250-0674
Fine-wire fuse	On request

16.2 After-sales service

Contact SAMSON's After-sales Service for support concerning service or repair work or when malfunctions or defects arise.

E-mail contact

You can reach our after-sales service at aftersalesservice@samsongroup.com.

Addresses of SAMSON AG and its subsidiaries

The addresses of SAMSON AG, its subsidiaries, representatives and service facilities worldwide can be found on our website (▶ **www.samsongroup.com**) or in all SAMSON product catalogs.

Required specifications

Please submit the following details:

- Type
- Configuration ID
- Serial number

EB 8340 EN

SAMSON AKTIENGESELLSCHAFT
Weismüllerstraße 3 · 60314 Frankfurt am Main, Germany
Phone: +49 69 4009-0 · Fax: +49 69 4009-1507
samson@samsongroup.com · www.samsongroup.com

2026-03-02 · English