Operating Instructions
CUC101

Optoelectronic measuring system for separation zone and sludge level detection

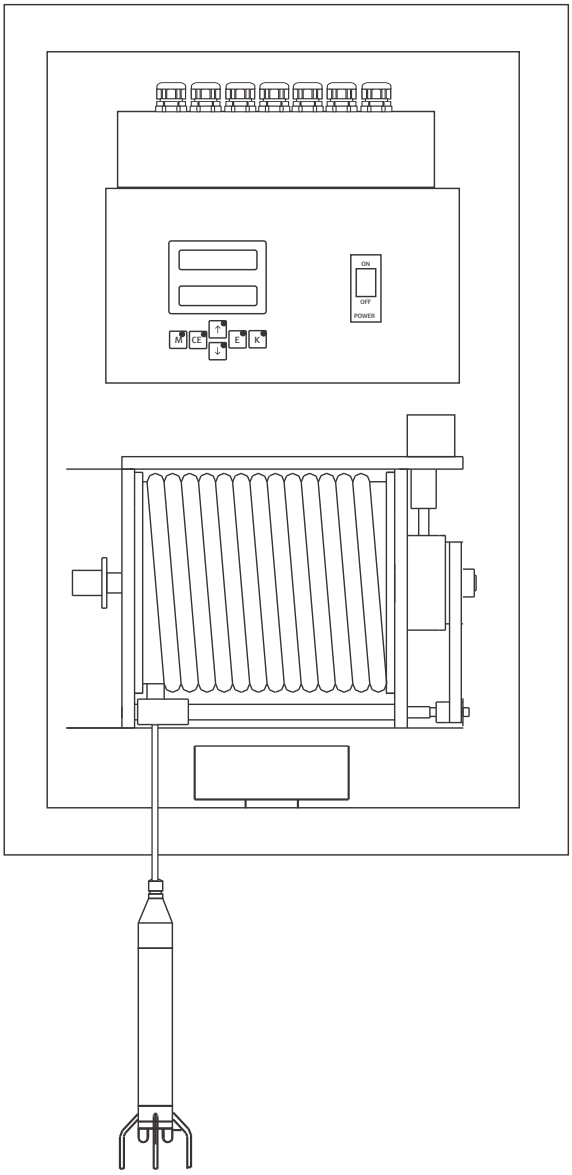

Endress+Hauser
People for Process Automation

Table of contents

1 Document information 4
1.1 Safety warnings 4
1.2 Symbols used 4

2 Basic safety instructions 5
2.1 Requirements for the personnel 5
2.2 Designated use 5
2.3 Occupational safety 5
2.4 Operational safety 5
2.5 Product safety 5

3 Device description 7
3.1 Device design 7
3.2 Function 8

4 Incoming acceptance and product identification 9
4.1 Incoming acceptance 9
4.2 Product identification 9
4.3 Scope of delivery 10
4.4 Certificates and approvals 10

5 Installation 11
5.1 Installation conditions 11
5.2 Mounting the measuring device 13
5.3 Post-installation check 14

6 Electrical connection 15
6.1 Special connection instructions 15
6.2 Terminal assignment 15
6.3 Internal hardware wiring 17
6.4 Inputs and outputs 18
6.5 Ensuring the degree of protection 22
6.6 Post-connection check 23

7 Operation options 24
7.1 Overview of operation options 24
7.2 Operating menu structure and navigation 25

8 Commissioning 28
8.1 Function check 28
8.2 Initial commissioning 28

9 Operation 35
9.1 Menu overview 35

10 Diagnostics and troubleshooting . . . 48
10.1 Troubleshooting instructions 48
10.2 Error messages 48

11 Maintenance 49
11.1 Maintenance schedule 49
11.2 Maintenance tasks 49

12 Repair 53
12.1 Spare parts 53
12.2 Return 53
12.3 Disposal 53

13 Accessories 54

14 Technical data 55

15 CUC101 parameter list 57

Index 58

1 Document information

1.1 Safety warnings

Structure of information	Meaning
DANGER **Causes (/consequences)** Consequences of non-compliance (if applicable) ▶ Corrective action	This symbol alerts you to a dangerous situation. Failure to avoid the dangerous situation **will** result in a fatal or serious injury.
WARNING **Causes (/consequences)** Consequences of non-compliance (if applicable) ▶ Corrective action	This symbol alerts you to a dangerous situation. Failure to avoid the dangerous situation **can** result in a fatal or serious injury.
CAUTION **Causes (/consequences)** Consequences of non-compliance (if applicable) ▶ Corrective action	This symbol alerts you to a dangerous situation. Failure to avoid this situation can result in minor or more serious injuries.
NOTICE **Cause/situation** Consequences of non-compliance (if applicable) ▶ Action/note	This symbol alerts you to situations which may result in damage to property.

1.2 Symbols used

- Additional information, tips
- Permitted or recommended
- Forbidden or not recommended

2 Basic safety instructions

2.1 Requirements for the personnel

- Installation, commissioning, operation and maintenance of the measuring system may be carried out only by specially trained technical personnel.
- The technical personnel must be authorized by the plant operator to carry out the specified activities.
- The electrical connection may be performed only by an electrical technician.
- The technical personnel must have read and understood these Operating Instructions and must follow the instructions contained therein.
- Measuring point faults may be repaired only by authorized and specially trained personnel.

Repairs not described in the Operating Instructions provided may only be carried out directly by the manufacturer or by the service organization.

2.2 Designated use

The CUC101 sludge level measuring system is designed to determine the separation zones in sludge/water mixtures in sedimentation tanks and thickeners. The transmitter may not be used in hazardous areas. Sensors may only be used in hazardous areas if they are explicitly labeled as Ex sensors.
Use of the device for any purpose other than that described, poses a threat to the safety of people and of the entire measuring system and is therefore not permitted.

The manufacturer is not liable for damage caused by improper or non-designated use.

2.3 Occupational safety

As the user, you are responsible for complying with the following safety conditions:
- Installation guidelines
- Local standards and regulations

Electromagnetic compatibility
- The product has been tested for electromagnetic compatibility in accordance with the applicable European standards for industrial applications.
- The electromagnetic compatibility indicated applies only to a product that has been connected in accordance with these Operating Instructions.

2.4 Operational safety

1. Before commissioning the entire measuring point, verify that all connections are correct. Ensure that electrical cables and hose connections are undamaged.
2. Do not operate damaged products, and safeguard them to ensure that they are not operated inadvertently. Label the damaged product as defective.
3. If faults cannot be rectified:
   Take the products out of operation and safeguard them to ensure that they are not operated inadvertently.

2.5 Product safety

2.5.1 State of the art

The product is designed to meet state-of-the-art safety requirements, has been tested, and left the factory in a condition in which it is safe to operate. The relevant regulations and European standards have been observed.

2.5.2 IT security

We only provide a warranty if the device is installed and used as described in the Operating Instructions. The device is equipped with security mechanisms to protect it against any inadvertent changes to the device settings.

IT security measures in line with operators' security standards and designed to provide additional protection for the device and device data transfer must be implemented by the operators themselves.

3 Device description

3.1 Device design

The CUC101 measuring system consists of the following components:

- Transmitter
- Tracking unit (motor, cable drum, signal transmission)
- Sensor

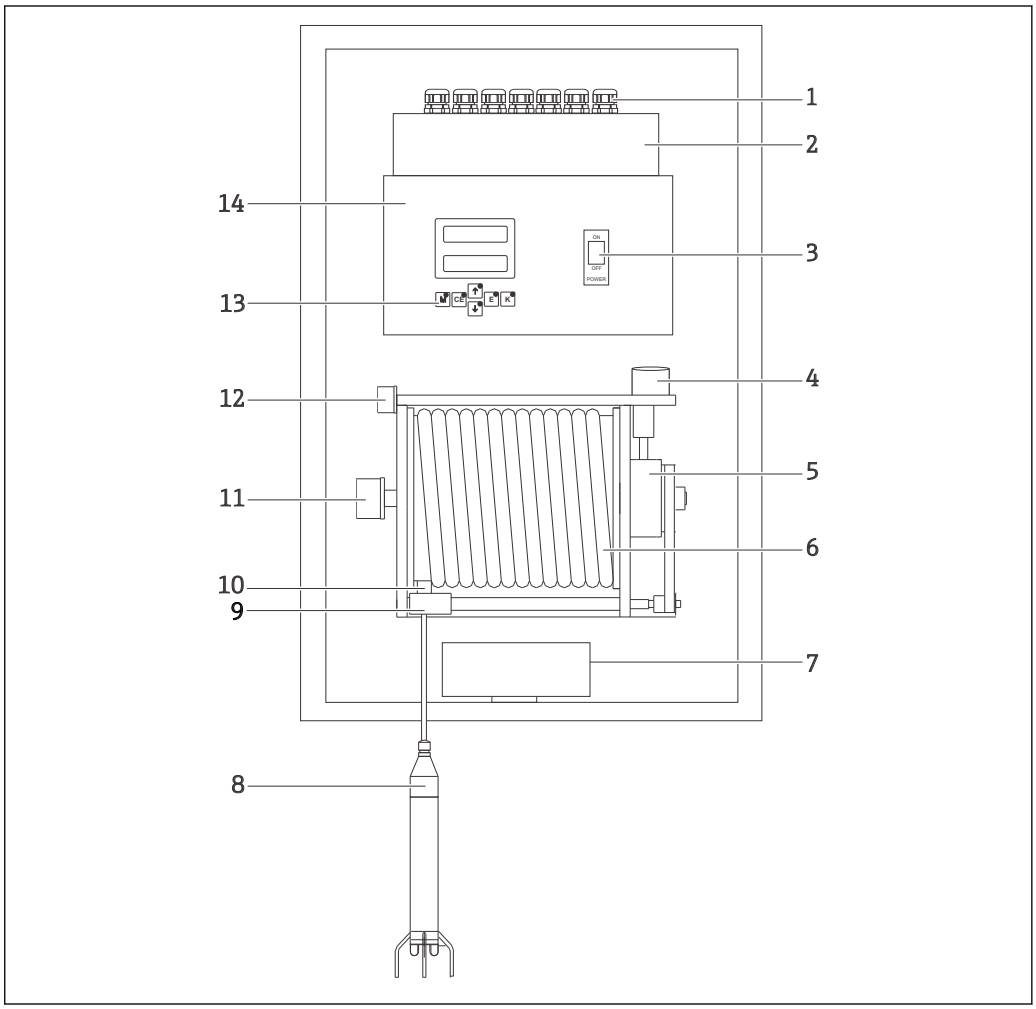

1 *Components of CUC101*

1	*Cable entries*	8	*Turbidity sensor with protective guard*
2	*Terminal compartment*	9	*Proximity switch (zero position, upper and lower limit value)*
3	*Transmitter mains switch*	10	*Cable conduit*
4	*Stepper motor*	11	*Slip ring*
5	*Gearbox*	12	*Connector*
6	*Cable drum*	13	*Operating keys*
7	*Heater, electronically controlled*	14	*Electronics housing*

3.2 Function

The transmitter is controlled by a microcontroller and carries out the following functions:

- Recording and processing of measured values
- Control of sensor position (depth) over the entire sludge concentration in relation to the set point. (Sludge concentration in the specified separation zone)
- Menu guidance on alphanumeric LCD display
- Saving and management of user parameters
- System and sensor monitoring

Entry of all user parameters, such as the measuring range, limits, cleaning interval and output signal settings is menu-guided and the user parameters are saved in a battery-backed memory.

4 Incoming acceptance and product identification

4.1 Incoming acceptance

1. Verify that the packaging is undamaged.
   ↳ Notify your supplier of any damage to the packaging.
   Keep the damaged packaging until the matter has been settled.
2. Verify that the contents are undamaged.
   ↳ Notify your supplier of any damage to the delivery contents.
   Keep the damaged products until the matter has been settled.
3. Check the delivery for completeness.
   ↳ Check it against the delivery papers and your order.
4. Pack the product for storage and transportation in such a way that it is protected against impact and moisture.
   ↳ The original packaging offers the best protection.
   The permitted ambient conditions must be observed (see "Technical data").

If you have any questions, please contact your supplier or your local sales center.

4.2 Product identification

4.2.1 Nameplate

Nameplates can be found:
- On the device
- On the packaging (adhesive label, portrait format)

The nameplate provides you with the following information on your device:
- Manufacturer identification
- Extended order code
- Serial number
- Ambient and process conditions
- Input and output values

Compare the data on the nameplate with your order.

4.2.2 Product page

www.endress.com/cuc101

4.2.3 Product identification

The order code and serial number of your device can be found in the following locations:
- on the nameplate
- in the delivery papers

Obtaining information on the device

1. Go to the product page for your device on the internet.
2. In the navigation area on the right-hand side, select "Check your device features" under "Device support".
   ↳ An additional window opens.
3. Enter the order code from the nameplate into the search field.
   ↳ You will receive information on each feature (selected option) of the order code.

4.3 Scope of delivery

The scope of delivery comprises:
- CUC101 measuring system
- Transportation lock (keep for any device returns)
- Allen screw to mount the tracking unit
- Elbowed Allen screw to set the proximity switches
- Corner covers (4 pcs)
- Fastening clips (4 pcs) with associated fastener
- Stainless steel sensor guard
- Transparent safety cover
- Operating Instructions

Operating Instructions in other languages can be downloaded on the product page.

4.4 Certificates and approvals

The product meets the requirements of the harmonized European standards. As such, it complies with the legal specifications of the EC directives. The manufacturer confirms successful testing of the product by affixing to it the CE mark.

5 Installation

5.1 Installation conditions

5.1.1 Dimensions

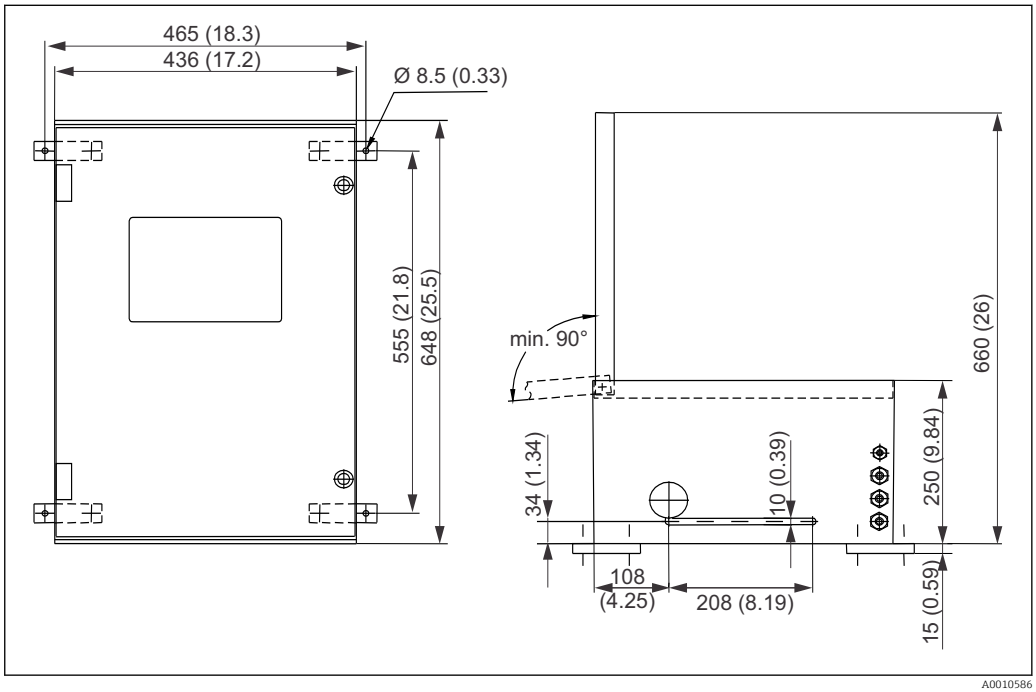

2 *CUC101: View of front side and view from below, door open. Dimensions in mm (inch),*

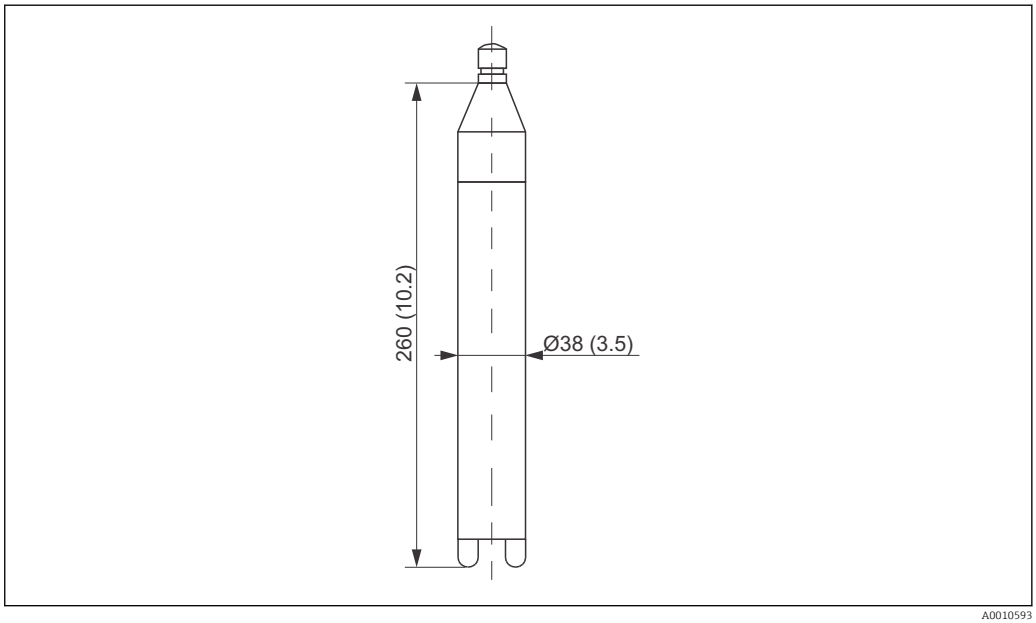

3 *Dimensions of standard sensor in mm (inch)*

5.1.2 Installation positions

The following are examples of possible installation positions for continuous *interface measurement*:
- On a mobile scraper bridge in the secondary clarifier.
- On a fixed scraper bridge in the sludge thickener.

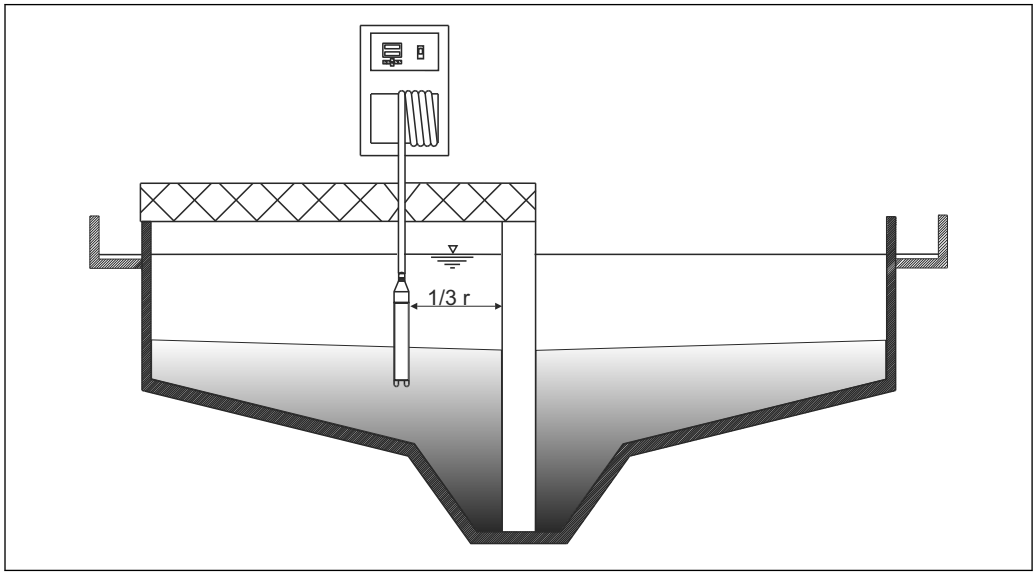

4 Mobile scraper bridge

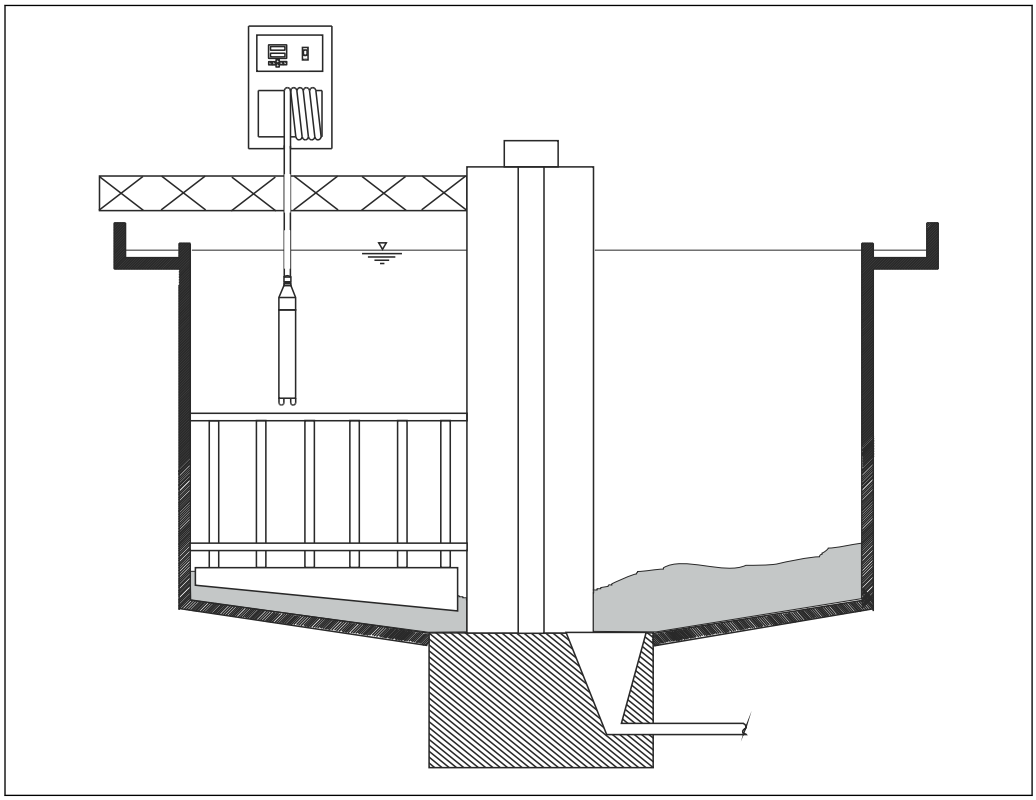

5 Fixed scraper bridge

5.2 Mounting the measuring device

⚠ CAUTION

Risk of injury!

The weight of the device can cause crushing or other injuries.

- Always have two people mount the device and always use the appropriate mounting tool.

5.2.1 Wall mounting

The device is supplied with fastening clips to mount the device on a wall.

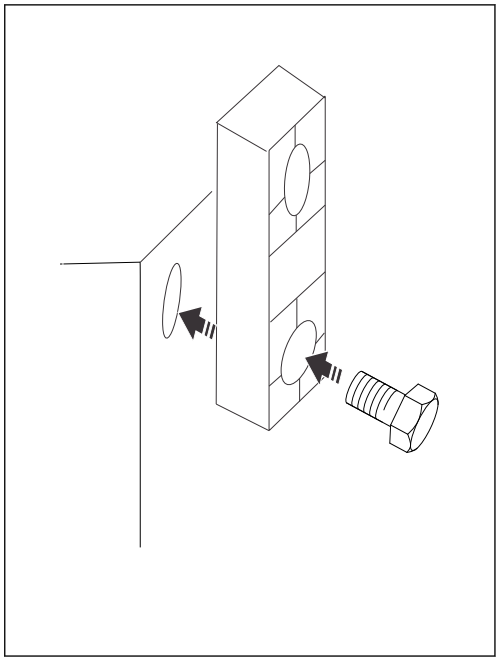

6 *Fastening kit*

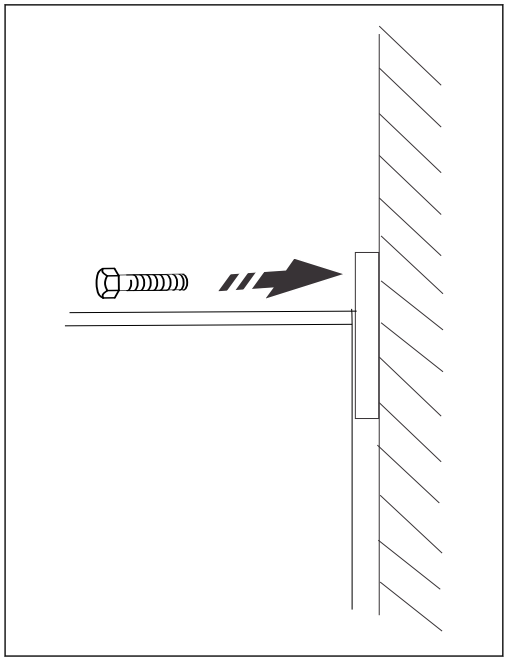

7 *Wall mounting*

1. Screw the four brackets onto the device.→ 6, 13
2. Drill four holes in the wall and insert a wall plug in either hole. → 7, 13
3. Screw the device along with the brackets onto the wall.

5.2.2 Mounting on bridge and basin rims

If mounting the device on the bridge or basin rim you can fit a railing bracket with a weather protection cover. See also the "Accessories" section:

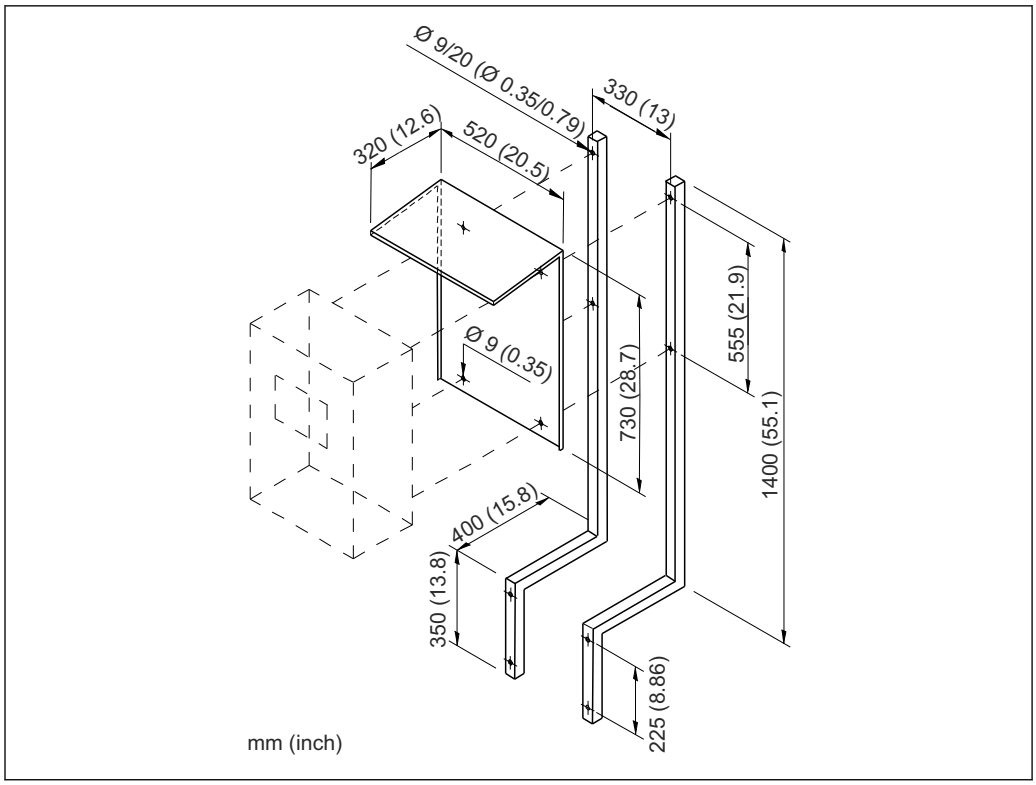

8 *Railing bracket with dimensions*

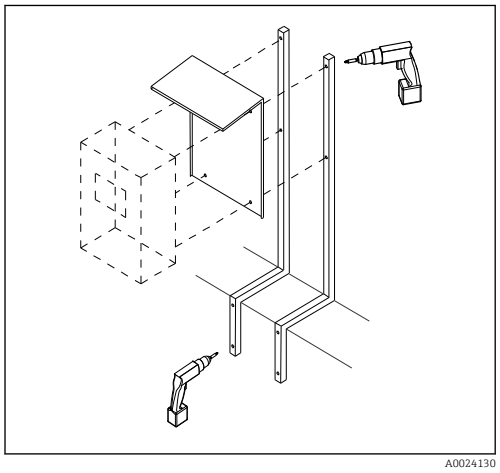

9 *Mounting the railing bracket*

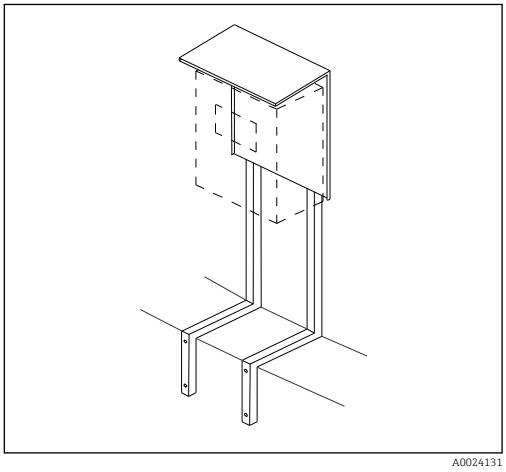

10 *Railing bracket with weather protection cover*

5.3 Post-installation check

- After mounting, check all the connections to ensure they are secure and leak-tight.
- Check whether all the cables are routed such that they are free from damage and the influence of electromagnetic interference.

6 Electrical connection

⚠ WARNING

Device is live

Incorrect connection may result in injury or death.

- ▶ The electrical connection may be performed only by an electrical technician.
- ▶ The electrical technician must have read and understood these Operating Instructions and must follow the instructions contained therein.
- ▶ **Prior** to commencing connection work, ensure that no voltage is present on any cable.

6.1 Special connection instructions

- A fuse with a maximum rating of 10 A must be provided by the customer. Observe the local regulations for installation.
- The circuit breaker must be a switch or power switch, and you must label it as the circuit breaker for the device.
- The protective ground connection must first be established. Danger may arise if the protective ground is disconnected.

6.2 Terminal assignment

NOTICE

The device is live!

An incorrect mains voltage can damage the device.

- ▶ Before connecting the device, make sure that the mains voltage matches the value indicated on the nameplate!
- ▶ A clearly labeled power circuit breaker must be installed in the vicinity of the device.
- ▶ Provide a suitable fuse for the transmitter at the place of installation.

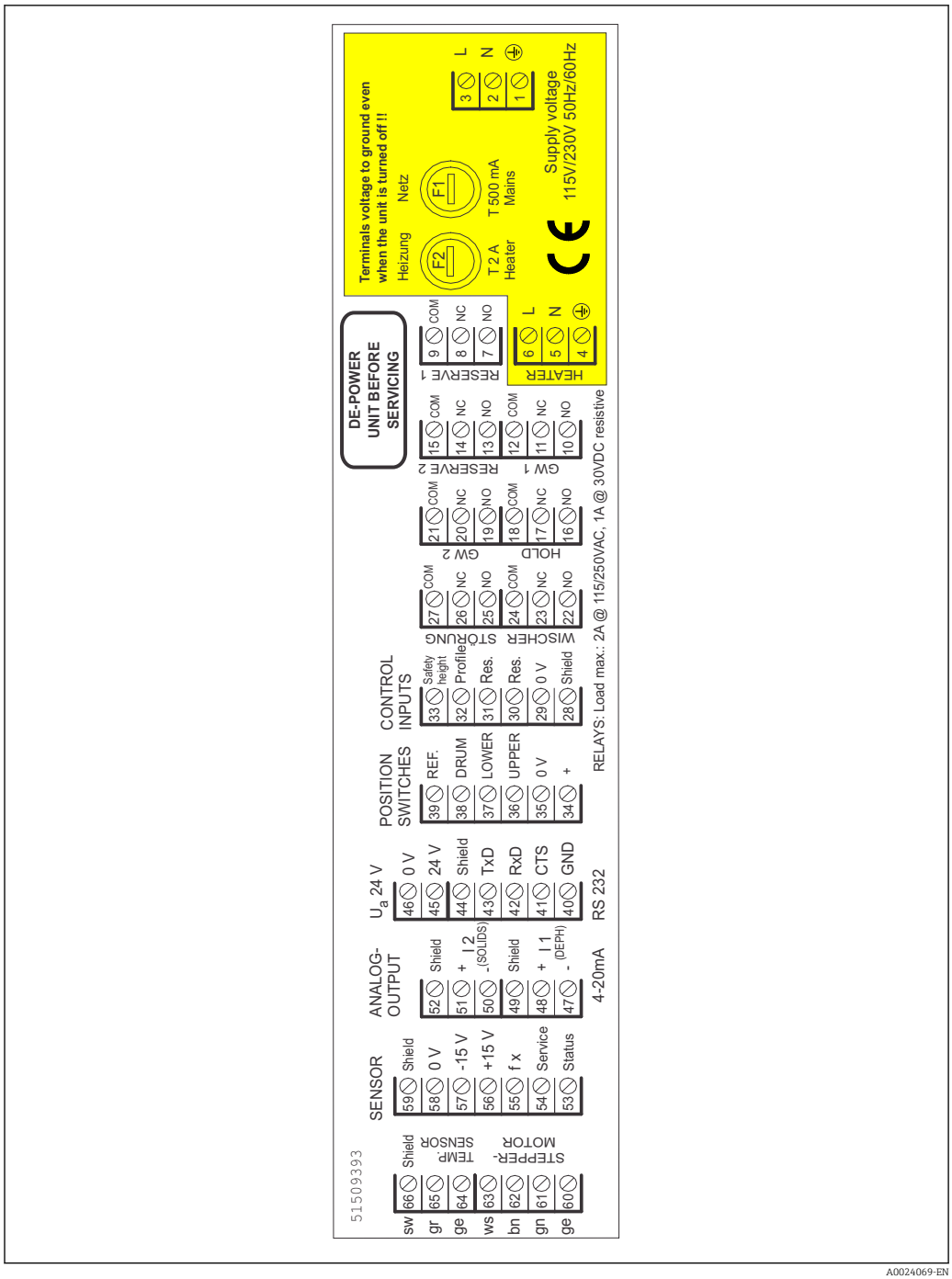
Terminals voltage to ground even when the unit is turned off !!
Heizung
Netz
F2
T 2 A
Heater
F1
T 500 mA
Mains
L
N
Supply voltage
115V/230V 50Hz/60Hz
DE-POWER UNIT BEFORE SERVICING
HEATER
RESERVE 1
RESERVE 2
GW 1
GW 2
HOLD
STÖRUNG
WISCHER
CONTROL INPUTS
POSITION SWITCHES
ANALOG-OUTPUT
SENSOR
STEPPER-MOTOR
TEMP. SENSOR
Shield
RELAYS: Load max.: 2A @ 115/250VAC, 1A @ 30VDC resistive
RS 232
4-20mA
51509393
A0024069-EN

6.3 Internal hardware wiring

Overview of device wiring

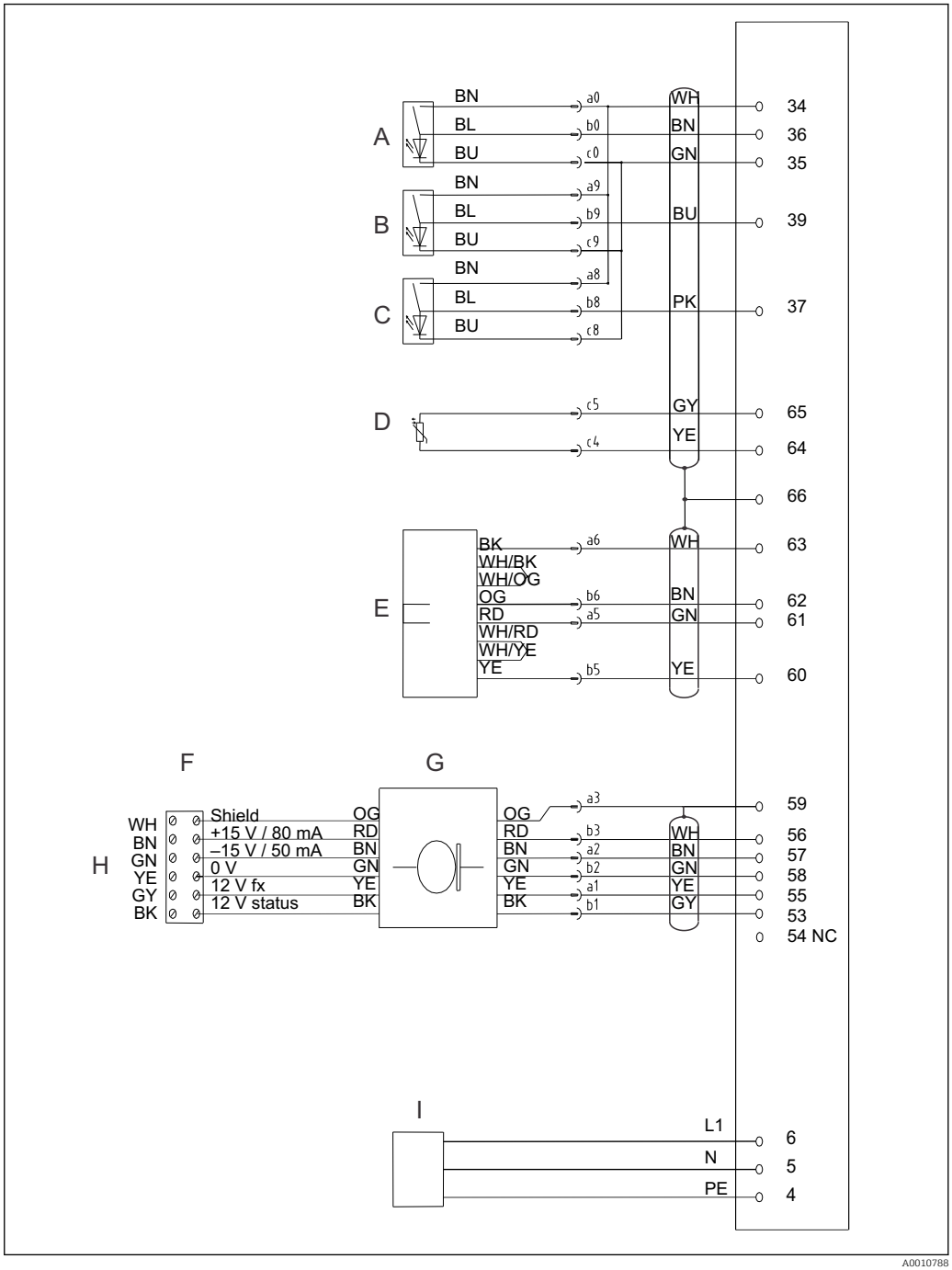

11 *Internal hardware wiring*

A Left limit switch (sensor TOP)
B Reference positioning switch (center)
C Right limit switch (sensor BOTTOM)
D Temperature sensor
E Stepper motor
F Terminal in drum
G Slip ring
H Sensor
I Heating

6.4 Inputs and outputs

Function	Designation	Terminal
Mains	L	3
	N	2
	PE	1
Alarm A	COM	12
	NC	11
	NO	10
Alarm B	COM	21
	NC	20
	NO	19
HOLD	COM	18
	NC	17
	NO	16
Cleaning	COM	24
	NC	23
	NO	22
Error	COM	27
	NC	26
	NO	25
Control inputs	Safety height	33
	Profile	32
	Res.	31
	Res.	30
	0 V	29
	Shield	28
RS 232	Shield	44
	TxD	43
	RxD	42
	CTS	41
	GND	40
U 24 V	0 V	46
	24 V	45
Analog output 2 0/4 to 20 mA	Shield	52
	+	51
	-	50
Analog output 1 0/4 to 20 mA	Shield	49
	+	48
	-	47
Reserve 1 / sensor at safety height	COM	9
	NC	8
	NO	7

Function	Designation	Terminal
Reserve 2	COM	15
	NC	14
	NO	13

6.4.1 Control inputs (+24 V)

Ua (+24 V, terminal 45) is used to control the "Scraper" input (terminal 33). Terminal 46 (0V) must be connected with terminal 29 (0V) for this purpose!

You can control the following functions via an external PLC using the control inputs:

- Move to safety height: apply 24 V to terminal 33
- Perform a profile run: apply 24 V to terminal 32

Scraper passage

The device is in the measuring mode. The sensor is at the safety height.

▶ Apply a voltage of 24 V at the "Scraper" input (terminal 33).

The two analog outputs are frozen and the sensor moves at maximum speed to the "safety height" entered in the "PARAMETER ENTRY" menu.

The sensor remains at the safety height until the end of the "safety period" set in the menu. It then returns to its measuring position and automatically starts measuring operation.

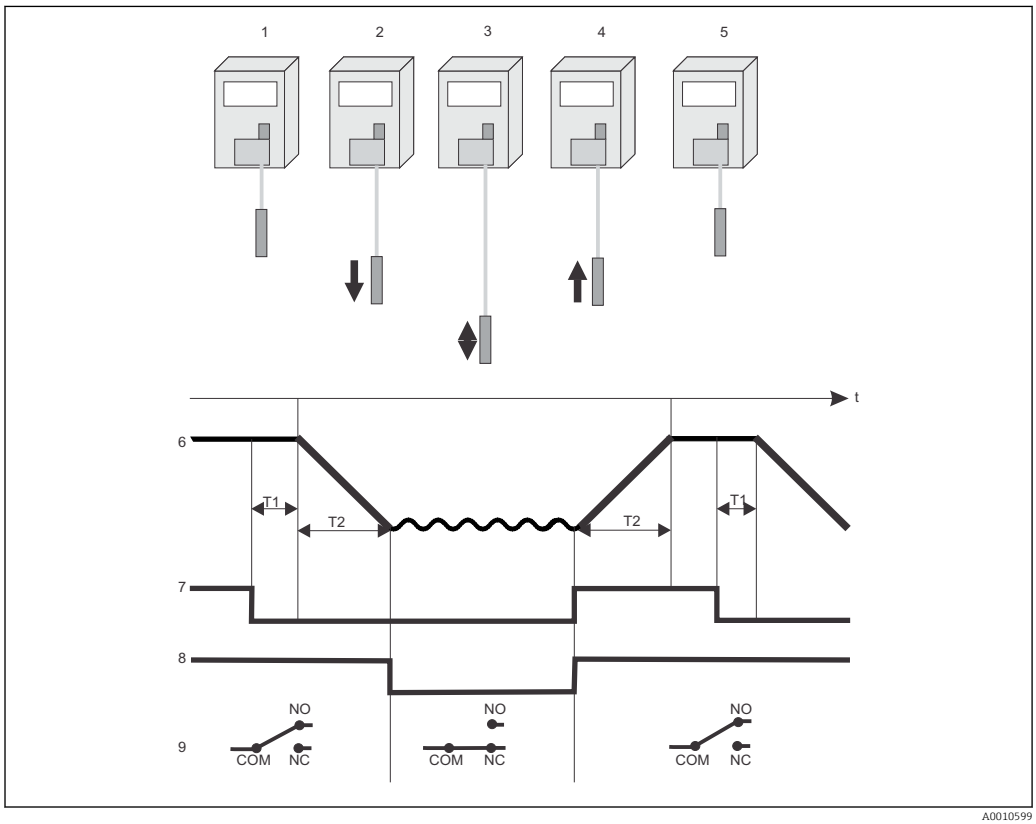

12 *Scraper passage*

1 *Safety height*
2 *Quick descent to old measuring position*
3 *Measure*
4 Quick ascension to safety height
5 *Safety height*
6 *Sensor position*
7 *Control for scraper, 24 V external contact*
8 *"Hold" relay*
9 *State of hold switching contact*
T1 *Duration of scraper passage*
T2 *Sensor downward and upward run time*

Profile run

- Ua (+24 V, terminal 45) can be used to control the "Profile" input (terminal 32). Terminal 46 (0V) must be connected with terminal 29 (0V) for this purpose!
- You can set the speed of the profile run between 3 mm/s and 100 mm/s in the Parameter Entry menu.

Trigger: 24V pulse (≥ 200 ms) at "Profile" input

The sensor takes a solids content profile from the surface (calibrated highest point) to the basin bottom (calibrated lowest point):

- Sensor travels quickly to the highest point.
- Profile is recorded at configurable speed: depth at current output 1 and solids content at current output 2.
- Sensor quickly adopts the measuring position before the start of the profile run.

Example for a 4-meter basin

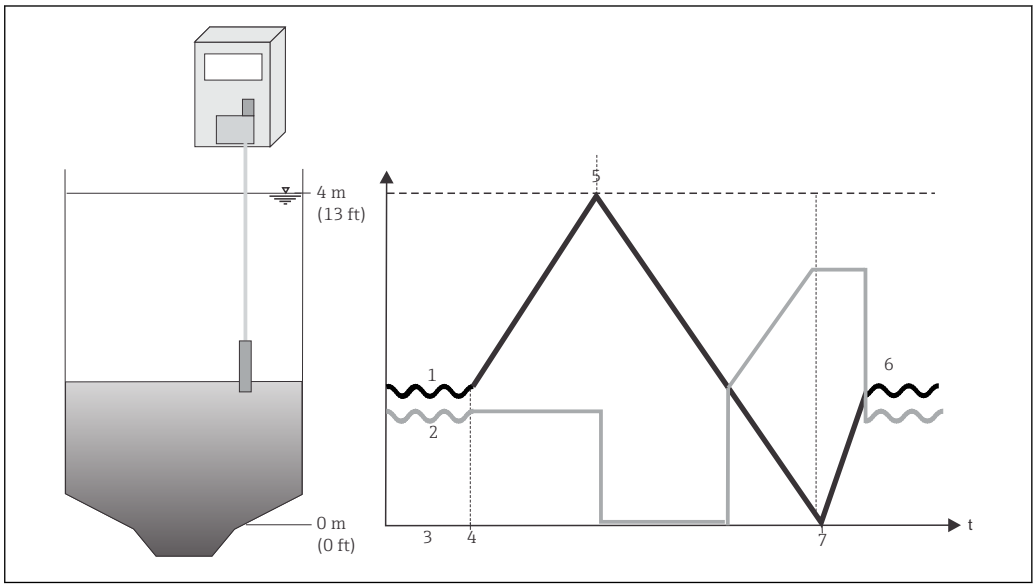

13 Profile run

1 Sensor position
2 Current output, solids, possible course
3 Measurement
4 Start profile run
5 Upper end point, start of profile run
6 Measurement is resumed
7 Lowest end point, end of profile run

6.4.2 Signal outputs (switching contacts)

The table below lists the switching states of the individual switch contacts:

"Condition met" means:

- Alarm A: Sensor position is above or below limit value 1
- Alarm B: Sensor position is above or below limit value 2
- Error: Error has occurred
- Hold: Measurement frozen
- Cleaning: Cleaning is active

	Condition met	Condition not met	Device switched off
Alarm A	A: 10 -12 R: 11-12	A: 11 - 12 R: 10 - 12	11 - 12
Alarm B	A: 19 -21 R: 20 - 21	A: 20 - 21 R: 19 - 21	20 - 21
Error	A: 25 - 27 R: 26 - 27	A: 26 - 27 R: 25 - 27	26 - 27
Hold	A: 16 -18	A: 17 - 18	17 - 18
Cleaning	A: 22 - 24	A: 23 - 24	23 - 24

A = NO contact (working current)

R = NC contact (quiescent current)

Device switched off = contacts closed in de-energized state

Hold and cleaning switching contacts: working current only (NO contact)

6.4.3 Analog outputs

Output	Current value
Current output I-1: (terminals 47 to 49) = depth	0 /4 mA to 20 mA
Current output I-2: (terminals 50 to 52) = sensor position	0 /4 mA to 20 mA

Load: max. 500 Ω

6.5 Ensuring the degree of protection

Only the mechanical and electrical connections which are described in these instructions and which are necessary for the required, designated use, may be carried out on the device delivered.

▶ Exercise care when carrying out the work.

Otherwise, the individual types of protection (Ingress Protection (IP), electrical safety, EMC interference immunity) agreed for this product can no longer be guaranteed due, for example, to covers being left off or cable (ends) which are loose or insufficiently secured.

6.6 Post-connection check

NOTICE

Connection errors

The manufacturer does not accept any responsibility for errors that result from failure to comply with the instructions in this manual.

▶ Put the device into operation only if you can answer **yes** to all the following questions.

Device condition and specifications

- Are the transmitter or cables free from damage on the outside?
- Does the line voltage match the specifications on the nameplate

Electrical connection

- Does the supply voltage match the specifications on the nameplate?
- Are the current outputs shielded and connected?
- Are the mounted cables strain-relieved?
  Route the power supply and signal lines separately over the entire distance. Separate cable ducts are ideal.
- Is the cable type route completely isolated?
- Is the cable run without loops and cross-overs?
- Are the power supply and signal cables correctly connected according to the wiring diagram?
- Are all the screw terminals properly tightened?
- Are all cable entries installed, tightened and sealed?
- Is the transmitter protected with a fuse?
- Is a power circuit breaker provided?

7 Operation options

7.1 Overview of operation options

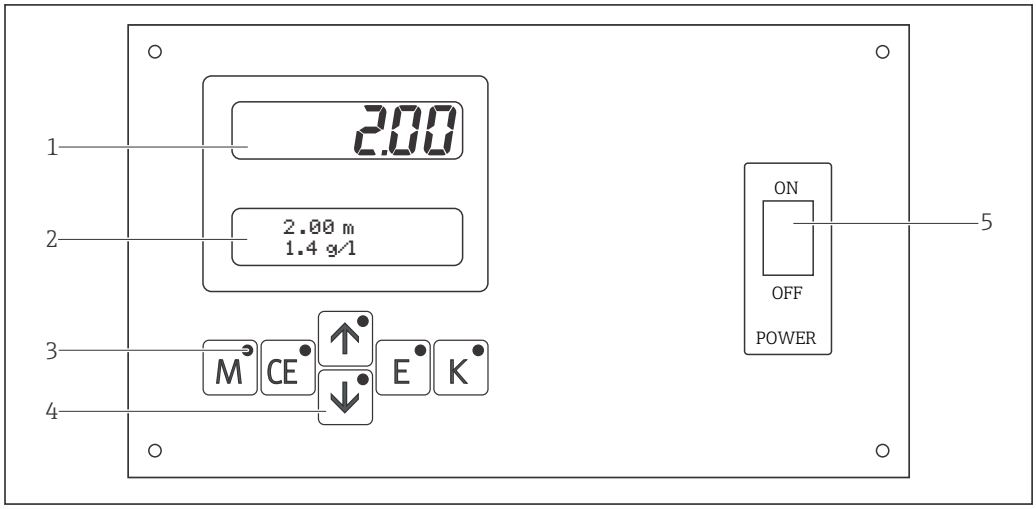

14 *Display and operating element*

1 *LED display (depth)*
2 *LCD display (depth+solids content)*
3 *Indicator LEDs*
4 *Operating keys*
5 *Transmitter mains switch*

7.2 Operating menu structure and navigation

7.2.1 Access to the operating menu via the local display

Key	Function	Function of the indicator LED
	▪ "Auto Measuring" menu ▪ Return to main menu from all the submenus	Alarm value A exceeded
	Backwards in submenu (horizontally), see Appendix.	Alarm value B exceeded
	▪ Backwards in main menu (vertically) ▪ Increase value	Solids measuring range exceeded
	▪ Forwards in main menu (vertically) ▪ Decrease value	Solids measuring range undershot
	▪ Select menu item ▪ Accept value, forwards in submenu (horizontally)[1)]	Error message called up
	▪ Selection in submenu ▪ Selection of +/- sign	Cleaning interval active

[1)] If the E and ↑ keys are pressed simultaneously, the second decimal place can be changed in some menus.

7.2.2 Menu functions

Call up the main menu by pressing and holding the M key until "MEASUREMENT" appears on the display. Please see the following table for the main menu items and information pertaining to these menu items.

Menu item	Info
MEASUREMENT	Record, analyze and display: ▪ Depth measured value ▪ Solids content measured value ▪ Depth analog output ▪ Solids content analog output ▪ Sensor signal frequency
PARAMETER ENTRY	Set the default values for: ▪ End of measuring range ▪ Concentration setpoint ▪ Alarm values A and B ▪ Signal filter ▪ Pause ▪ Function of return stroke ▪ Scraper passage ▪ Measuring interval and measuring duration for periodic measurement ▪ Cleaning ▪ Zero position run
CALIBRATION SOLIDS	Specify the number of measuring points Adopt measured sensor frequency
CALIBRATION DEPTH	Specify the direction of measurement and the zero point and end point
SOLIDS INPUT	Assign the solid content values to the sensor frequencies for solids calibration
FREQUENCY	Call up and manually change the sensor frequencies for solids calibration
CONFIGURATION	Basic settings: ▪ Type of sensor ▪ Unit of measure ▪ Correction factor ▪ Measuring type ▪ Speed profile ▪ Separation zone hysteresis ▪ Analog output ▪ Alarm values A and B ▪ Error message
LANGUAGE	Select the menu language
DIAGNOSTIC	Display the error messages
MANUAL	Move the sensor up and down manually

7.2.3 Navigation

Navigation in the main menu

1. Press M.
2. Go to the desired main menu.
3. Press the E key to confirm.
   ↳ You are taken to a submenu where you can display different values.

Code number

You must enter a code to enter the submenu.

1. Press the ↑ key to enter "**91**" as the code in order to enter the submenu.
2. Press the E key to confirm.
   ↳ You enter the submenu.

If an incorrect code is entered you exit the submenu.

Navigation in the submenu

Forwards:	
Backwards:	
Enter values:	 
Return to main menu:	

8 Commissioning

8.1 Function check

⚠ WARNING

Incorrect connection, incorrect supply voltage

Safety risks for staff and device malfunctions

- ▶ Make sure that all connections have been established correctly.
- ▶ Make sure that the line voltage matches the voltage specified on the nameplate!

8.2 Initial commissioning

Commissioning is necessary in order to set the proximity switches and calibrate the depth and the solids. You cannot expect definite measured values if these settings are not made.

8.2.1 Language selection

1. Go to the "LANGUAGE" menu.
2. Select the desired language.
3. Press E to confirm.

8.2.2 Preparing the sensor for measurement

The ready-wired sensor is located in the device housing for transportation reasons. The next section explains how to remove the cover of the CUC101 and introduce the sensor into the process.

⚠ CAUTION

Risk of injury!

When mounting, make sure to avoid injury or damage to the device.

- ▶ Use the tool supplied and work in pairs to mount the device.

Removing the transportation locks

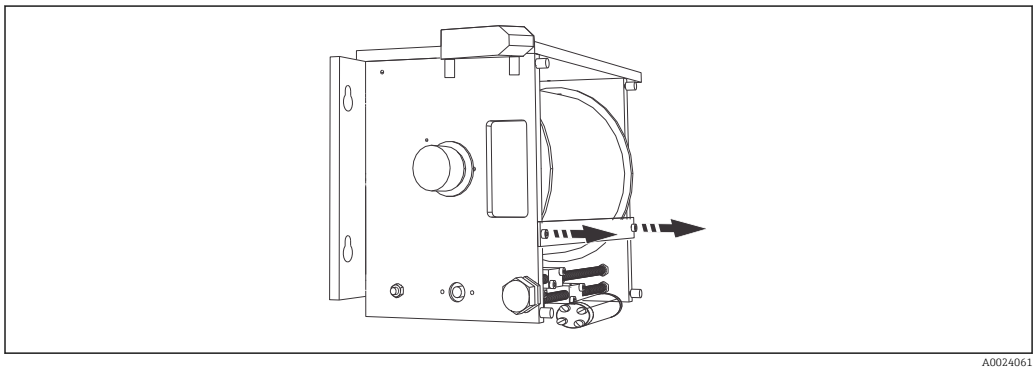

A0024061

15 *Transportation lock*

Proceed as follows to mount the sensor:

▶ Remove the transportation locks from the cable drum.→ 15, 28

Disassembling the tracking unit

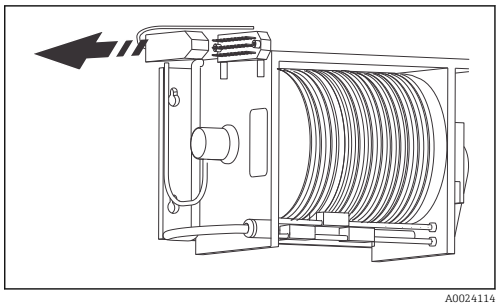

16 *Connector*

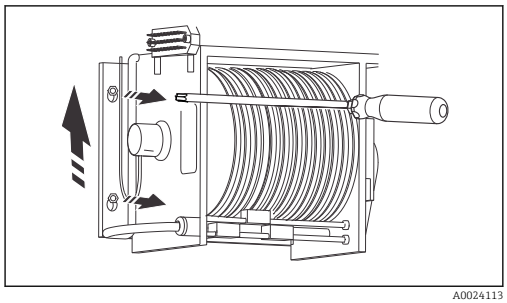

17 *Securing the tracking unit*

1. Remove the sensor from the housing.
2. Disconnect the connector on the tracking unit. → 16, 29
3. Release the screws on the tracking unit using the Allen screw supplied.→ 17, 29
4. Lift up the tracking unit and remove it.
5. Place the tracking unit on a clean surface.
   ↳ By removing the tracking unit, access to the sensor entry on the base of the housing is no longer blocked.

Sensor entry

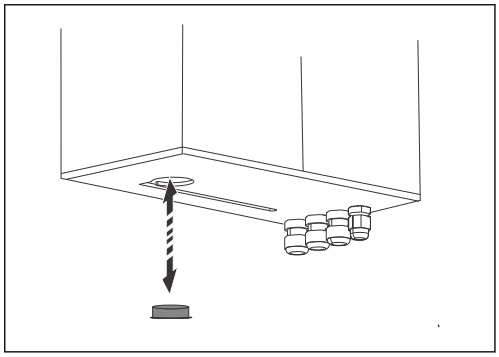

18 *Sensor cover*

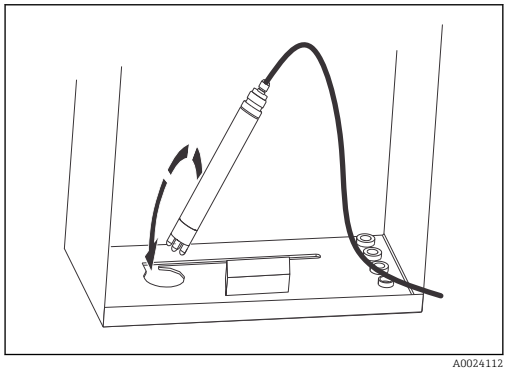

19 *Sensor entry*

1. Remove the cover of the sensor entry on the base of the housing.→ 18, 29
2. Guide the sensor through the sensor entry. In doing so, insert the cable through the slot.→ 19, 29
3. Hold the sensor in place until the tracking unit is securely mounted again.
4. Close the sensor entry by fitting the cover back on.
5. Fit the tracking unit back in.
6. Tighten the screws of the tracking unit again.
7. Plug the tracking unit connector back in.

Only mount the cover plate supplied once you have performed depth and solids calibration.

Sensor guard

A sensor guard with a 90 ° angle bracket is available to use the sensor in floating sludge. No tools are needed for the installation.

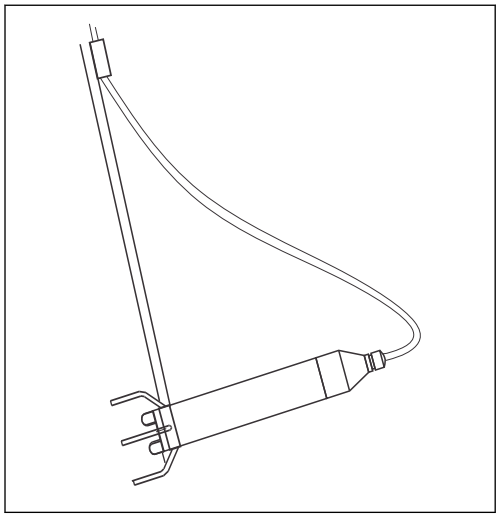

20 90 ° sensor guard

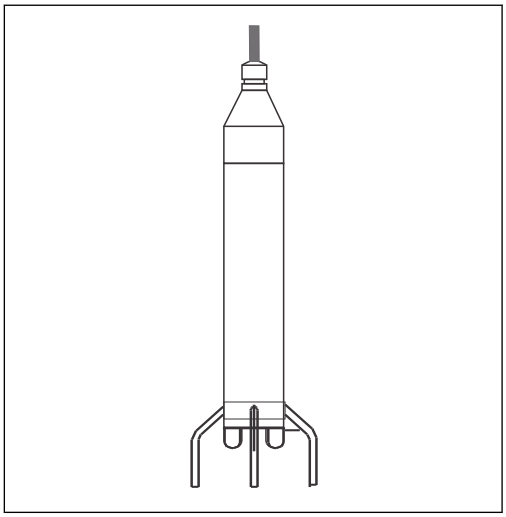

21 Straight sensor guard

8.2.3 Setting the proximity switches

Familiarize yourself with the operation of the transmitter before switching the system on for the first time.

Read the "Safety instructions" and "Operation" sections in particular.

When commissioning, only perform a depth calibration after you have worked through the entire "Configuration" menu.

NOTICE

Protection against damage.

The proximity switches are for safety purposes only. The actual operation takes place within the calibrated measuring range.

► Set the proximity switches before operation.

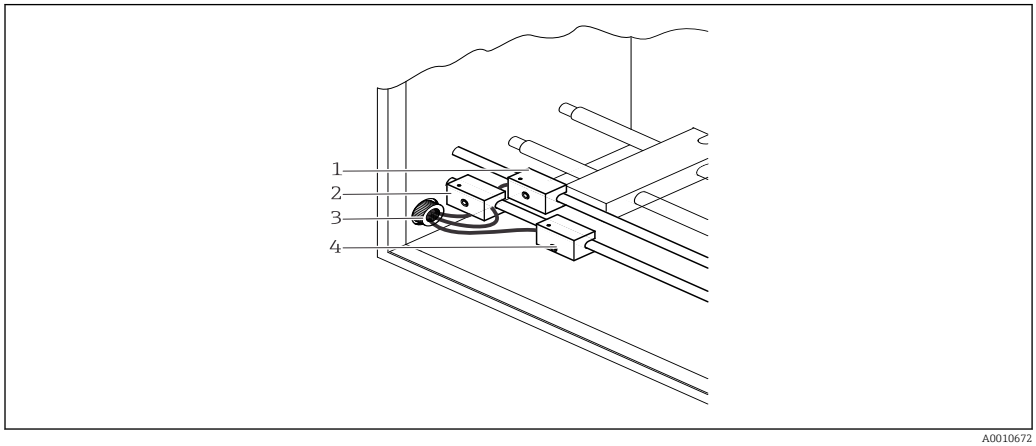

22 Proximity switches

1 Reference positioning switch
2 Proximity switch for upper limit
3 Cable gland
4 Proximity switch for lower limit

Setting the lower proximity switch

This proximity switch is needed to prevent the system from being operated outside the lower end point.

1. Switch off the transmitter and wait a few seconds.
2. Press the M and ↓ keys simultaneously and switch on the device.
   ↳ This prevents the zero position run.
3. Go to the "MANUAL" menu and press the E key to confirm.
4. Using the ↓ arrow key, move the sensor down to the floor of the basin. Proceed with care when moving to the desired position.
   ↳ Pay attention to the strain on the sensor cable. If the cable relaxes the sensor is at the basin floor.
5. Raise the sensor approx. 6 -10 cm.

Adjusting the lower proximity switch

1. Release the proximity switch for the lower limit **(4)**→ 🖼 22, 🖹 30 using a 2.5 mm Allen screw (included in the delivery).
2. Move the switch slowly from right to left until it is enabled.
   ↳ The LED lights up orange.
3. Fix the proximity switch in this position.
4. To check the exact position, raise the sensor until the LED goes out and lower it again until the LED lights up again.

Setting the upper proximity switch

This proximity switch is needed to prevent the system from being operated outside the upper end point.

▶ Using the ↑ arrow key, raise the sensor until the desired upper end point is reached and the sensor may not be raised any higher.

Adjusting the upper proximity switch

1. Loosen the proximity switch for the upper limit **(2)**.
2. Move the switch slowly to the right until it is enabled.
   ↳ The LED lights up orange.
3. Fix the proximity switch in this position.
4. Check the position in the same way as for the lower proximity switch.
5. Tighten the cables of the proximity switches and the cable gland **(3)**.
6. Press M.
   ↳ This completes the configuration of the proximity switches.

8.2.4 Depth calibration

NOTICE

The device performs a reference position run every 24 hours. The reference positioning switch (1) is used as a reference point.
If the position of the reference positioning switch (1) is changed, this shifts the entire measuring range. Despite correct on-screen display, the sensor can actually be in a completely different position.
► Do not change the position of the reference positioning switch after calibration.

Reference positioning switch

1. Position the reference positioning switch so that it is located between the upper and lower limit switch.
2. Switch off the transmitter, wait a few seconds and switch it back on again.
   ↳ The CUC101 performs zero positioning based on the factory settings. In doing so, it looks for the reference positioning switch as the point of reference.

   The CUC101 then moves to half the calibrated depth measuring range. (The depth calibrated at the factory.)
3. Press the M key.
4. Go to the "CALIBRATION DEPTH" menu and press the E key to confirm.
   ↳ This takes you to the "Code number" submenu.
5. Enter **91** as the code and then press E to confirm.
   ↳ You are now in the "Meas. direction" submenu.
6. Select one of the options "From surface" or "From bottom"

Moving to the proximity switches

Calibration example for the "From bottom" measuring direction.

1. Using the ↓ arrow key, move the sensor slowly down to the lower end point.
   ↳ The LED of the lower proximity switch lights up.
2. Raise the sensor approx. 6 - 10 cm.
3. Press the E key to confirm.
4. Using the ↑ arrow key, move the sensor slowly upwards to the desired end point. In this example this is equivalent to a 20 mA analog output.
5. Press the E key to confirm.
   ↳ This completes depth calibration.

8.2.5 Solids calibration

Solids calibration is only necessary for the profile run. See the control inputs section → 20. The factory values suffice for all other applications.

Example of a 3-point calibration
Place three dark buckets at the ready:
- Bucket one is filled with clear water.
- Bucket two is filled with sludge of average solids content.
- Bucket three is filled with sludge of high solids content.

1. In the laboratory, determine the solids content of the sludges in the second and third bucket.
2. Retract the sensor from the basin.

Number of measuring points

The various solids are now each given a measuring point which the sensor can record.

1. Press the M key on the transmitter.
2. Go to the "CALIBRATION SOLIDS" menu.
3. Press the E key to confirm.
   ↳ This takes you to the "Code number" submenu
4. Enter 91 as the code and then press E to confirm.
   ↳ You are now in the "Measuring points" submenu.
5. Using the ↓ key, set "3" as the number of measuring points for the three measuring samples.
6. Press the E key to confirm.
   ↳ You are now in the "1st measuring point" submenu.

Determining the measuring points

1. Place the sensor in the bucket containing clear water. There should not be any air bubbles on the sensor.
   ↳ The measuring frequency is displayed. It is around 4000 Hz.
2. Once the value displayed has stabilized press the E key to accept the value.
3. Place the sensor in the bucket containing sludge of average solids content and stir.
   ↳ The measuring frequency displayed is around 3000 Hz.
4. Once the value displayed has stabilized press the E key to accept the value.
5. Place the sensor in the bucket containing sludge of high solids content and stir.
   ↳ The measuring frequency displayed is around 2000 Hz.
6. Once the value displayed has stabilized press the E key to accept the value.

Assigning the measuring points

The measuring points determined must now be assigned to the laboratory values.

1. Press the M key.
2. Go to the "SOLIDS INPUT" menu.
3. Press the E key to confirm.
   ↳ This takes you to the "Code number" submenu.
4. Enter 91 as the code and then press E to confirm.
   ↳ You are now in the "1st measuring point" submenu.

Entering the laboratory values

1. Enter 0.00 g/l as the solids content (equivalent to clear water).
2. Press the E key to confirm.
   ↳ The value moves to the 2nd measuring point.
3. Enter the laboratory value for the sludge with average solids content, e.g. 3.5 g/l.
4. Press the E key to confirm.
   ↳ The value moves to the 3rd measuring point.
5. Enter the laboratory value for the sludge with high solids content, e.g. 6.3 g/l.
6. Press the E key to confirm.
7. Press M.
   ↳ This completes solids calibration.

8.2.6 Mounting the cover plate

The cover plate supplied is mounted at the end of initial commissioning.

You do not require any tools to mount the cover plate.

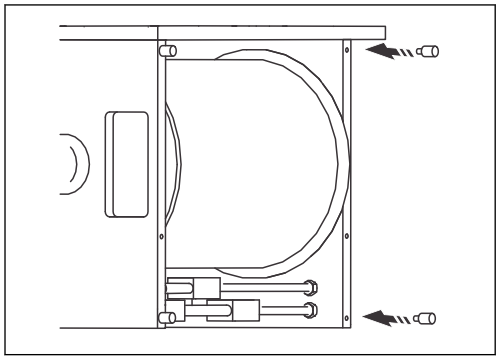

23 Spacer

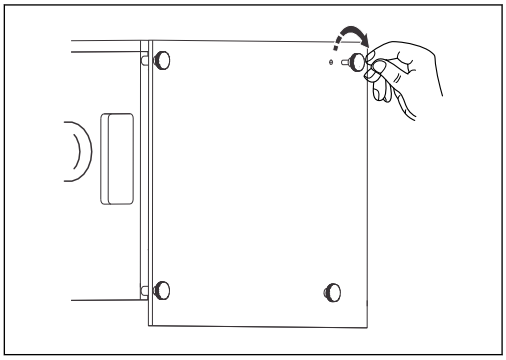

24 Cover plate

Proceed as follows:

1. Open the protective door of the housing.
2. Screw the spacers provided into the side panels. → 23, 34
3. Secure the cover plate with the knurled head screws. → 24, 34

9 Operation

9.1 Menu overview

9.1.1 Main menu "LANGUAGE"

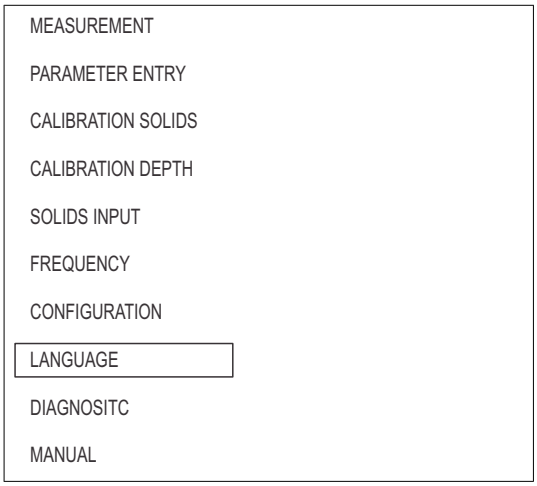

You can choose from the following languages:

- Deutsch
- English
- Français
- Svenska
- Italiano
- Espanol
- Polski

9.1.2 Main menu "Measurement"

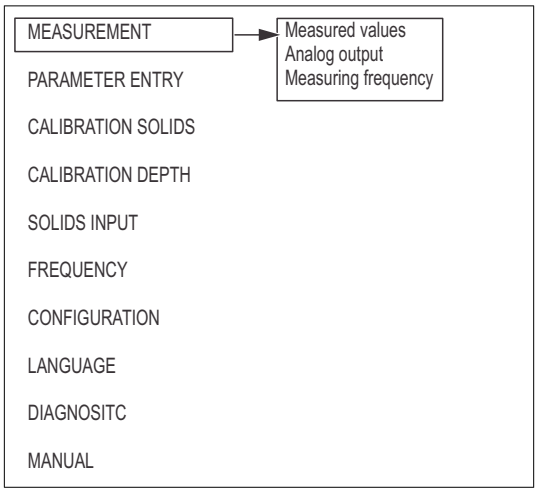

The following values are determined or recorded in the "MEASUREMENT" main menu:
- The sensor signal
- The sensor position
- The analog outputs

LED display and LCD display
During the first measurement two areas are displayed after power-up. The top display area is an LED display that is easier to read from afar, while the bottom is an LCD display containing additional information.

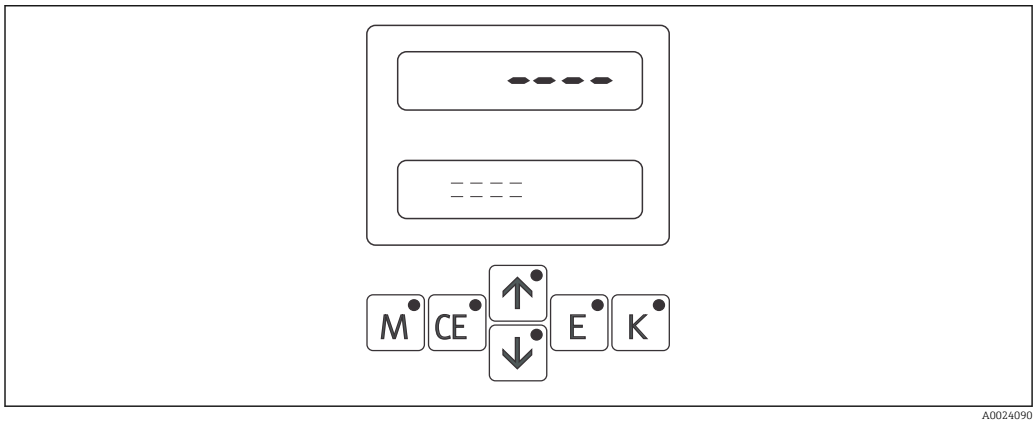

25 *LED and LCD display*

These display areas also appear if an error has occurred after previous normal operation. The LED on the E key is also lit in this case. Go to the "DIAGNOSTIC" main menu to read the error messages.

During measuring operation, you can toggle between the "Measured values", "Analog output" and "Measuring frequency" submenus using the E key.

Functions	Possible settings	Info
Measured values	g/l, %, ppm, mg/l, TEF, NTU, FNU m, ft (depending on the selected sensor)	Displays the depth and the solids content. Unit depending on the type of sensor selected in the "CONFIGURATION" menu.
Analog outputs	Current output	Displays the two analog output current values that correspond to the measured depth and the solids content.
Measuring frequency	Hz m, ft	Displays the depth and the frequency (raw signal for the solids content).

9.1.3 Main menu "CONFIGURATION"

When you configure the device, you define the default values to be used to populate the variables in the "PARAMETER ENTRY" menu.

During initial commissioning, first work through the entire "CONFIGURATION" menu. Some settings which you can make in this menu affect the values in the "PARAMETER ENTRY" menu.

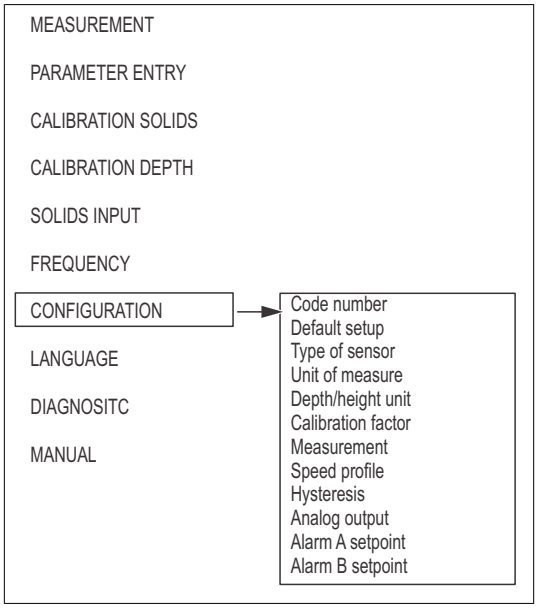

Factory settings for sensor types

CUS65-A/SAM

	Cal. point	Frequency (Hz)	Assign g/l
 A0024733	1	4250	0.0
	2	2650	5.0
	3	2150	10.0
	4	1000	15.0

CUS65-C / SAV

	Cal. point	Frequency (Hz)	Assign %	Assign g/l
 A0024734	1	6500	0.000	0.00
	2	6000	1.00	10.0
	3	5750	2.00	20.0
	4	5470	3.00	30.0
	5	5150	4.00	40.0
	6	4900	5.00	50.0

CUS65-D / SSN

	Cal. point	Frequency (Hz)	Assign TEF / FNU	Assign mg/l	Assign ppm	Assign NTU
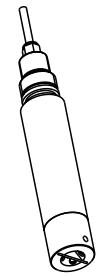 A0024735	1	6600	0.500	0.250	0.250	0.500
	2	5920	5.00	2.50	2.50	5.00
	3	5320	20.00	10.0	10.0	20.00
	4	4920	50.00	25.0	25.0	50.00
	5	4620	100	50.0	50.0	100
	6	4320	200	100	100	200
	7	4020	400	200	200	400
	8	3600	1000	500	500	1000

The CUS65-A / SAM sensor is supplied in the standard version of the CUC101 measuring system. Special versions of the measuring system require you to change the sensor type settings accordingly.

↳Once the two arrow keys are pressed simultaneously by way of confirmation, the device automatically uses the appropriate characteristic curve.

Functions	Possible settings	Info
Default setup	Yes No	All the settings can be reset to the factory settings here. The depth calibration is retained.
Unit of measure	g/l, %, ppm, mg/l, TEF **g/l**	You can define the measuring unit for the solids concentration here. Different units are available depending on the selected sensor type. ▪ CUS65-A: g/l ▪ CUS65-C: %, g/l ▪ CUS65-D: TEF, mg/l, ppm, NTU, FNU
Depth unit	m, ft **m**	You can set the depth of the separation zone here.
Calibration factor	−25 to +25% **+0%**	Linear adaptation factor of the calibration curve for minor fluctuations in the composition of the wastewater. Is automatically set to "0" if the factory setting is selected. Use the arrow keys to enter the desired calibration factor > 0 % or < 0 % 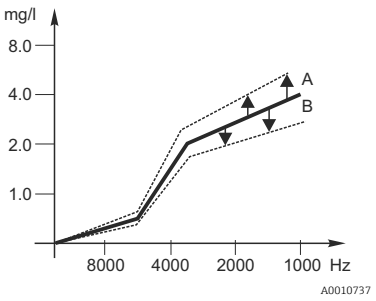 *26 Calibration curve* *A Calibration factor > 0 %* *B Calibration factor < 0 %*

Functions	Possible settings	Info
Measurement	Continuous, periodic **Continuous**	▪ Continuous: The sensor measures non-stop. Continuous search for the separation zone. ▪ Periodic: The duration of the search for the separation zone and the intervals between two searches are controlled via the Parameter Entry menu.
Speed profile	3 to 100 mm/s **20 mm/s**	Sensor travel speed in mm/s for profile run.
Separation zone hysteresis	5 to 30 % **20 %**	Here you set the change in sludge concentration as of which the CUC101 performs a new search for the separation zone or stops the current search.
Analog output	0 to 20 mA **4 to 20 mA**	Select the current range to which the defined depth measuring range and solids measuring range should be mapped.
Alarm A and alarm B setpoint	Quiescent current (NC contact) **Working current (NO contact)**	Configure the relay as a working or quiescent current contact

9.1.4 Main menu "PARAMETER ENTRY"

In this main menu you define the parameters that are then processed by the program and displayed in the various submenus.

Make sure to first work through the "CONFIGURATION" chapter before starting the parameter settings.

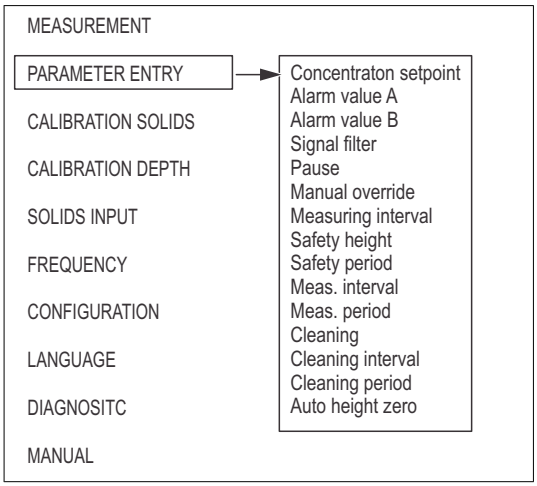

Functions	Possible settings	Info
End of measuring range	Depends on the sensor type: 0.10 to 20 g/l 20.0 g/l	Scaling of analog output to 20 mA full scale value. Depends on the measuring unit selected.
Concentration setpoint (sludge density set point)	0.10 to 20 g/l 1.0 g/l	Set the required sludge density which the sensor should search for.
Alarm value A and B	0 to 10.0 m Alarm value A: 0.50 m Alarm value B: 2.0 m	Enter the limit values for the sensor position. If values fall outside these limit values, this causes the limit relays to switch (working current to quiescent current), (switching hysteresis 2% of the limit value). **The limit values can only be set for calibrating the depth.**
Signal filter	0 to 600 s **30 s**	The signal filter indicates the time (in seconds) during which the sensor signal is determined arithmetically. The sensor signal is measured every 0.5 seconds. The signal filter setting applies for the measurement and the calibration of the sensor. It affects the travel speed and the raw signal (frequency) of the sensor.
Pause	0 to 360 s **30 s**	Interval between two attempts to search for the separation zone: ▪ If the sensor finds a separation zone, it dwells in this position for the set interval time. Then the search starts again. The exact sensor position depends on whether the return stroke is activated or not. ▪ If the return stroke is activated, the sensor is raised by 4 cm and remains there for the selected pause time. If the return stroke is deactivated, the sensor remains directly at the separation zone.

Functions	Possible settings	Info
Return stroke	Yes/No **Yes**	Specifies whether the sensor is raised by 4 cm if it finds a separation zone. Raising the sensor helps prevent fouling.
Manual override	Yes/No **Yes**	Sensor response if the "Scraper" input is controlled. ▪ Yes: If the input is controlled, the sensor goes to the set safety height in all the operating modes (automatic and manual). ▪ No: If the input is controlled, the sensor only goes to the set safety height in the automatic operating mode.
Safety height	0 to 14 m **1.30 m**	Defines the position which the sensor should adopt for the duration of the scraping process. The measurement and analog output are frozen during the scraping operation. The sensor temporarily leaves the separation zone found and is in the configured position. The scraper can now pass through the area unhindered.
Safety period	1 to 720 s **5 s**	Defines the length of time the sensor should remain at the safety height once the signal at the "Scraper" input is no longer active. The sensor only returns to the previous measuring position after the specified safety period has elapsed.
Meas. interval	5 to 60 min **30 min**	If you selected periodic measurement in the Configuration menu, specify the time between two measurements here.
Meas. period	1 to 15 min **1 min**	If you selected periodic measurement in the Configuration menu, specify the duration of the measurement.
Cleaning	Intern/sync. **Sync.**	▪ During the cleaning process, the sensor goes to the safety height where it is cleaned with water (option). ▪ Measurement is interrupted and the values frozen during the cleaning process. ▪ Sync.: Cleaning is always triggered synchronously with the scraping operation. ▪ Intern: The time of the cleaning process is controlled by the CUC101.
Cleaning interval	0 to 720 min **0 min**	Only when "internal cleaning" is selected. Define the time between two cleaning routines here.
Cleaning period	1 to 600 s **1 s**	Defines the duration of a cleaning process.
Reference positioning interval	0 to 168 h **24 h**	Defines the time after which the sensor starting position is automatically readjusted in accordance with the position of the reference positioning switch. 0 = No reference position run.

9.1.5 Main menu "CALIBRATION SOLIDS"

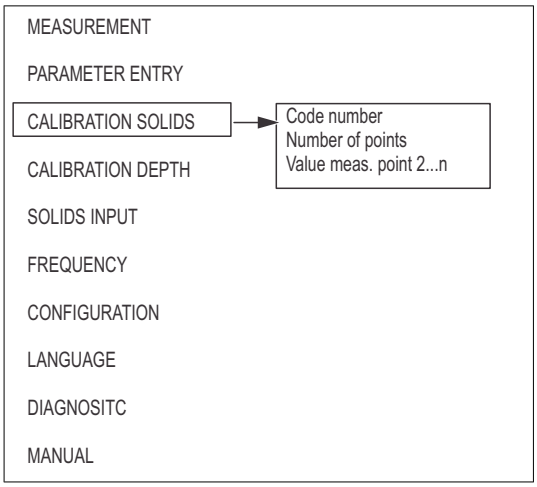

Functions	Possible settings	Info
Number of points	2 to 8 **4**	Number of individual sensor signals of a solid concentration that are to be used for calibration. The device is precalibrated with four points when delivered from the factory.
Value measuring points 2 to n	0 to 6500 Hz e.g. **4250 Hz**	Displays the sensor signal currently measured that was determined when calibrating the solids.

The frequency values determined for the individual measuring points are assigned to the appropriate solids content in the "SOLIDS INPUT" main menu.

9.1.6 Main menu "CALIBRATION DEPTH"



Functions	Possible settings	Info
Meas. direction	From bottom From surface **From bottom**	Select the direction of measurement. From the top: The path zero point is located near the basin surface and the path end point is below it (in the direction of the basin bottom). Increasing the meter value is equivalent to lowering the sensor. From bottom: The path zero point is located near the basin bottom and the path end point is above it (in the direction of the basin surface). Increasing the meter value is equivalent to raising the sensor.
Zero set	0.0 to 11.4 m **0.0 m**	The selected zero point corresponds to the 0/4 mA current value.
Max. range set	0.0 to 11.4 m **0.0 m**	Enter the sensor end point here. This value corresponds to the 20 mA analog output.

Do not re-adjust the reference positioning switch after calibrating the depth! This switch acts as the reference point for counting the motor steps.

9.1.7 Main menu "SOLIDS INPUT"

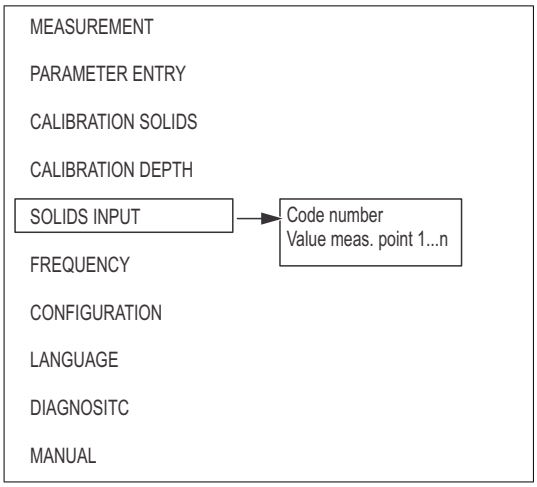

Functions	Possible settings	Info
Value meas. point 1	0.00 to 200 g/l **0.00 g/l**	The solids contents that correspond to the frequencies saved under Calibration Solids can be entered consecutively for all the measuring points here.

9.1.8 Main menu "FREQUENCY"

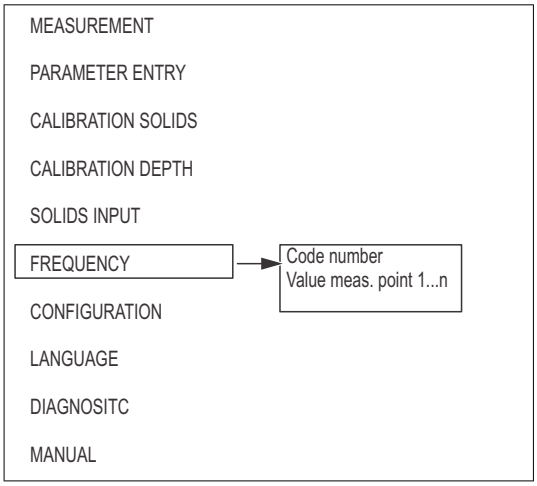

Functions	Possible settings	Info
Value meas. point 1	0 to 6500 Hz e.g. **4250 Hz**	Here, you can interrogate and manually adjust the values that were recorded in the "Calibration Solids" menu.

9.1.9 Main menu "DIAGNOSTIC"

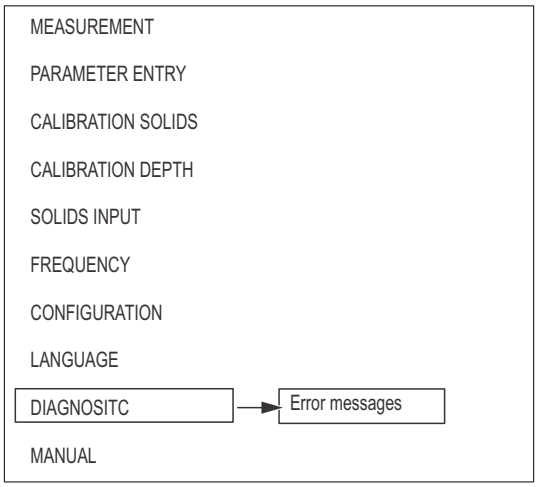

- This is a read-only menu.
- A description of the individual error messages, what they mean and remedial measures are provided in the "Troubleshooting instructions" section .
- The signal output is only set to "Error" if the cause of the error is present without interruption for at least 30 seconds plus twice the signal filter time.
- The current output holds the last measured value for the duration of the error. Limit value alarms remain unchanged.
- The error relay remains active as long as the error is present.

Functions	Info
LED display and LC display	You can read the error messages in this menu. The LED on the E key is also lit in this case. Go to the "DIAGNOSTIC" menu to read the error messages.
Error messages	For a list of the error messages, see the "Troubleshooting" section

9.1.10 Main menu "MANUAL"

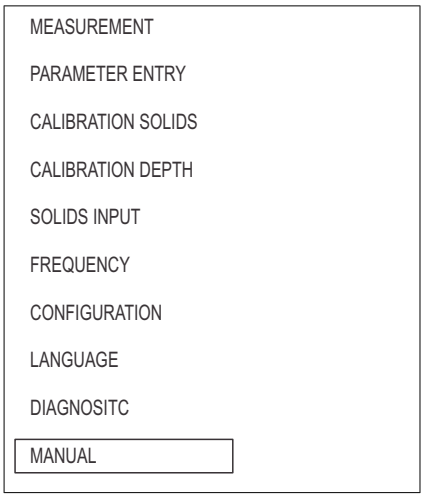

The current sensor position and the solids content measured at this position are displayed here.

▶ Use the arrow keys to manually move the sensor up and down, even beyond the zero point and end point.

The current outputs are not affected.

Functions	Possible settings	Info
LC display	m, ft g/l, %, ppm, mg/l, TEF, NTU, FNU	The current sensor position and the solids content measured at this position are displayed here.

10 Diagnostics and troubleshooting

10.1 Troubleshooting instructions

Always start troubleshooting with the following checklists if faults occur after commissioning or during operation. The routine takes you directly to the cause of the problem and the appropriate remedial measures.

10.2 Error messages

Error message	Failure frequency	Possible cause	Tests and/or remedial measures
No sensor signal	0 Hz	Transmitter not receiving a signal from the sensor due to cable break	▪ Check electrical connection ▪ If you have any questions, please contact your Endress +Hauser Service.
Sensor fouled	505 Hz	Sensor measuring windows dirty	Clean sensor
Check error / calibration	-	Measuring points with the same frequency have been entered in the CALIBRATION SOLIDS menu	Correct the entry for the frequencies

11 Maintenance

The measuring system generally requires little maintenance. However, you should perform the following tasks to ensure that the system remains in perfect working condition:

- Cleaning of the sensor
- Calibration
- Checking of cables and connections.

NOTICE

When servicing the device, make sure not to damage the sensor measuring windows.

- ▶ Never use hard or pointed objects to clean the measuring channels.
- ▶ The sensor may only be opened by Endress+Hauser personnel as otherwise the warranty becomes null and void.
- ▶ When performing any maintenance work on the device or sensor, bear in mind any potential impact this may have on the process control system or on the process itself.
- ▶ You may only perform the maintenance work described in the following sections. All other maintenance work must be carried out by Endress+Hauser Service.

11.1 Maintenance schedule

Period	Activity	Information
Weekly	Clean sensor	Remove residue using spray water
Monthly	▪ Clean sensor (gap) ▪ Calibrate	▪ Clean the optical windows with ultrafiltration cleaner if possible ▪ Check calibration and recalibrate if necessary
Annually	Functional test	▪ Check battery (battery has a service life of approx. 5 years) ▪ Check cables and connections

11.2 Maintenance tasks

11.2.1 Cleaning

The choice of cleaning agent depends on the degree and type of fouling. The most common types of dirt and fouling and the suitable cleaning agents are listed in the following table.

Type of fouling	Cleaning agent
Large residues	Cloth
Greases and oils	Agents containing surfactants (alkaline agents) or water-soluble organic solvents (e.g. ethanol)
Limescale deposits, metal hydroxide buildup, lyophobic biological buildup	Approx. 3% hydrochloric acid, ultrafiltration cleaner
Sulfide deposits	Mixture of 3% hydrochloric acid and thiocarbamide (commercially available), ultrafiltration cleaner
Protein buildup	Mixture of 3% hydrochloric acid and pepsin (commercially available), ultrafiltration cleaner
Light biological buildup	Pressurized water, ultrafiltration cleaner

NOTICE

No solvents

- ▶ Never use acetone or any organic solvents containing halogens. Such solvents can damage plastic parts of the sensor and some are suspected of causing cancer (e.g. chloroform).

11.2.2 Checking cables and connections

Check the cables and connections using the following checklist:

- Check that the sensor cable is intact, especially the outer insulation.
- Tighten the terminals in the device. In doing so, also check whether the internal compartment and terminals are clean, dry and free from corrosion (if not, check that the seals and glands are intact and leak-tight).
- Cable shields must be connected precisely as specified in the wiring diagram. Shields that are not connected, or are connected incorrectly, can impair the interference immunity of the device.

11.2.3 Sensor replacement

⚠ CAUTION

When the device is switched off, the heater becomes very hot.
There is a danger of scalding when the tracking unit is mounted.
▶ Make sure not to come into contact with the heater.

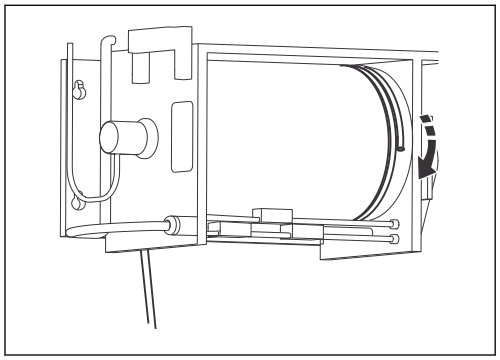

27 Unrolling the cable winding

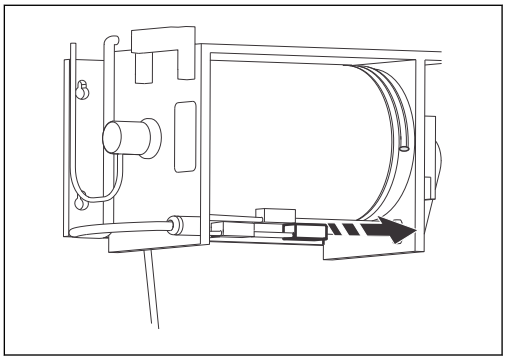

28 Mounting the proximity switch

Sensor removal

Proceed as follows to replace the sensor:

1. Go to the "MANUAL" menu.
2. Mark the position of the right limit switch.
3. Loosen the right limit switch. → 28, 50
4. Move the limit switch as far right as possible or remove it.→ 28, 50
5. Unreel the sensor until there are about 1½ windings of cable on the drum.→ 27, 50
   ↳ The cable relaxes as it unrolls. Make sure there is sufficient strain on the cable, as otherwise the cable can become tangled which puts a load on the motor.
6. Continue to move the sensor slowly.
   ↳ The cable bore in located in the center of the drum. The mounting plate becomes visible on the left-hand side.
7. Switch off the mains switch.

NOTICE

The tracking unit is heavy and bulky.
There is a risk of damaging the device accessories, such as the heater or motor.
▶ Always work in pairs.

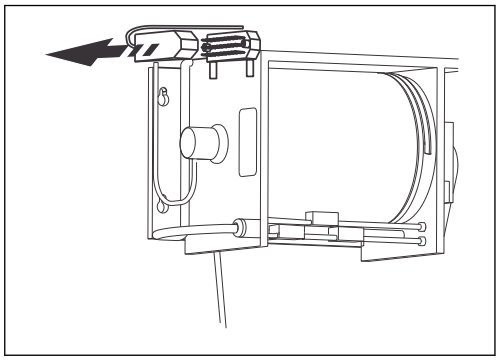

29 Connector

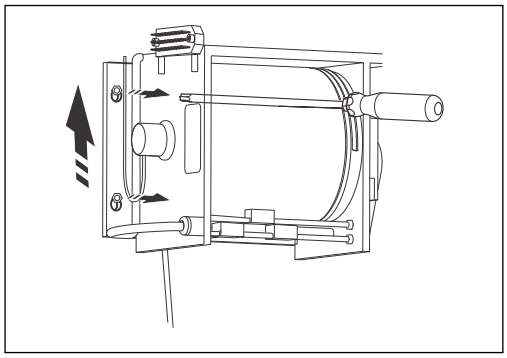

30 Retaining screws

1. Disconnect the connector on the tracking unit. → 29, 51
2. Slightly slacken the four retaining screws to which the tracking unit is secured. → 28, 50
3. Lift out the tracking unit.

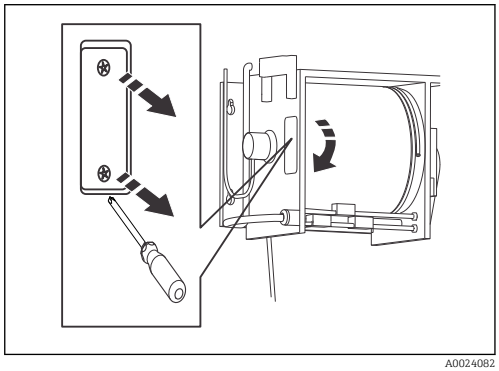

31 Mounting plate

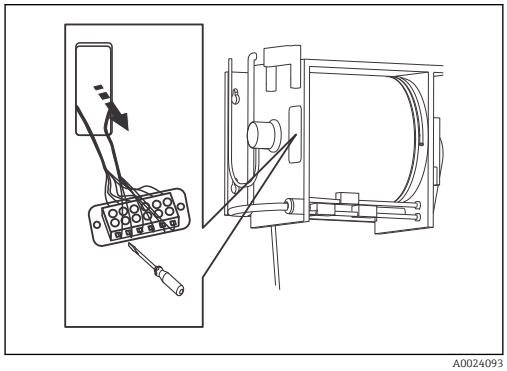

32 Disconnecting the sensor

1. Unscrew the small metal mounting plate on the left-hand side.→ 31, 51
2. Disconnect the sensor cable from the terminal strip. → 32, 51
   ↳ The sensor cable can now be removed.
3. Guide the cable through the drum, the guide block and the housing floor.

Sensor installation

Sensor installation is the reverse of the removal procedure.

1. Use a taut wire to make is easier to guide the cable of the new sensor through the drum.
2. Connect the sensor cable to the terminal strip as described in the "Internal hardware wiring" section. → 33, 52 or → 11, 17
   ↳ The new sensor is installed and can be put into operation.

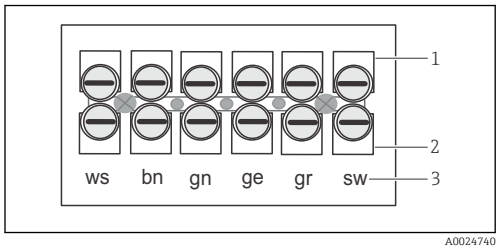

33 *Sensor wiring*

1 *Wiring to slip ring*
2 *Sensor wiring*
3 *Color coding in German*

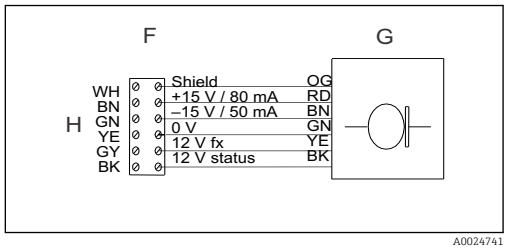

34 *Sensor wiring diagram*

F *Terminal in drum*
G *Slip ring*
H *Sensor*

Mounting the tracking unit

1. Screw the small mounting plate back onto the tracking unit. → 31, 51
2. Guide the sensor through the sensor entry. → 19, 29
3. Fix the tracking unit onto the retaining screws.→ 28, 50
4. Tighten the screws again.
5. Fit the connector on the tracking unit. → 29, 51
6. Check whether the positions of the two outer proximity switches are correct. Adjust if necessary.

Rolling up the sensor

1. Switch on the device.
2. Press down the M and ↑ keys simultaneously. This prevents the device from immediately starting a zero position run.
3. Go to the "MANUAL" menu.
4. Wind the sensor cable onto the drum using the ↑ key.
   ↳ The right proximity switch lights up once the sensor has reached the precalibrated height.

Make sure that the cable runs smoothly and that there is no overlapping on the tracking unit.

▶ Check depth calibration.

12 Repair

12.1 Spare parts

Spare part	Order number
Stepper motor for tracking unit	51504688
Slip ring rotor (non-Ex)	51504549
Slip ring rotor (Ex)	51504694
Proximity switch CUC101, gravure top	51504500
Proximity switch CUC101, gravure center, zero positioning run	51506131
Proximity switch CUC101, gravure bottom	51506130
Proximity switch CUC101, without gravure	51504550
Proximity switch CUC101, gravure external	51508451
Toothed belt	51504539
Large gear	51504497
Small gear	51504496
Shear pin, brass 3 mm	51504567
Set of clips for wall mounting	51504560
Corner cover set for external housing	51504559
Allen screw, long, 6 x 350	51504752
Allen screw, short, 3 mm	51504634
Transmitter complete with housing	51503605
Sensor (non-Ex) with 13 m cable (43 ft)	51503601
Sensor (Ex) complete with limit step 7900 ZB, with 13 m cable (43 ft)	51504698
Heating module	51503606
Tracking unit (non-Ex), complete, w/o sensor	51503604
Tracking unit (Ex), complete, w/o sensor	51506725
Sensor guard, straight	51503875
Sensor guard, 90° installation	51503783
CPU module w/o software	51513625
Basic assembly, 80-230 VAC	51513634
Front panel complete with film and switch	51513627

12.2 Return

The device is repaired on site.

Contact your Endress+Hauser Service.

12.3 Disposal

The device contains electronic components and must therefore be disposed of in accordance with regulations on the disposal of electronic waste.

Observe the local regulations.

13 Accessories

The following are the most important accessories available at the time this documentation was issued.

For accessories not listed here, please contact your service or sales office.

- Railing bracket with weather protection cover and fastening kit
  Order No.: 51503584
- Cleaning brush for cable
  Order No.: 51503585
- Sensor rinsing device, stainless steel VA, DN 200 incl. solenoid valve
  Order No.: 51503586
- Sensor rinsing device, plastic PP, DN 300 incl. solenoid valve
  Order No.: 51503587

14 Technical data

14.1 Input

Measured variable	▪ Turbidity ▪ Height
Measuring range	▪ Turbidity: 0 to 12 g/l; 0.01 to 1 % ▪ Height: 0 to 11 m (0 to 36 ft); user-definable
Wavelength	Infrared, 880 nm
Signal inputs	▪ Signal input 1: ▪ Signal input 2 (24 V DC): ▪ Signal input 3 (24 V DC): Measuring input synchronization, e.g. to raise the sensor during a scraper profile run

14.2 Output

Output signal	0/4 to 20 mA, galvanically isolated
Switch outputs	▪ 2 limit contactors ▪ 1 fault-signaling contact ▪ 1 sensor cleaning contact
Load	Max. 500 Ω
Contact switching power	115/230 V AC / 2 A, 30 V DC / 1 A
Heating power	55 VA, thermostatically controlled

14.3 Electrical connection

Supply voltage	230/115 V AC +6 to -10%, 50/60 Hz
Power consumption	Max. 105 VA (electronics + heater)

14.4 Performance characteristics

Maximum measured error	±1% of reading
Repeatability	0.5 %

Max. sensor stroke	±1% of reading
Sensor speed	Max. 10 cm/s (manual mode)

14.5 Environment

Ambient temperature range	-20 to 60 °C (-4 to 140 °F)
Degree of protection	▪ Housing: IP 43 ▪ Sensor: IP 68

14.6 Process

Medium temperature	Max. 50 °C (122 °F)
Medium pressure	Max. 6 bar (87 psi)

14.7 Mechanical construction

Design, dimensions	→ 2, 11See the "Installation" section
Weight	Total weight with sensor and tracking unit: approx. 30 kg (66 lbs)

Materials

Transmitter

Housing	Polyester
Front window	Polycarbonate

Sensor:

Sensor	Stainless steel 1.4571 (AISI 316Ti), polyoxymethylene
Sensor cable	Polyurethane sheath
Sensor guard	Stainless steel 1.4571 (AISI 316Ti)

Tracking unit

Cable drum (B x Ø):	210 x Ø 160 mm (8.27 x Ø 6.3")
Cable length:	13 m (43 ft)
Drive:	Stepper motor with worm gear and toothed belt
Stepping speed:	200 steps per revolution
Signal transmission:	Stainless steel slip rings
Tracking speed:	Max. 10 cm/s

15 CUC101 parameter list

Customer:	**Location:**	**Date:**
Serial number:	**Probe, ser. no:**	**Software version:**

Configuration				
Probe type	**Factory setting**	**Unit of measure**	**Calibration factor**	**Measurement**
	☐ Yes ☐ No			☐ Periodic ☐ Continuous

Speed profile	Hysteresis SZ	Analog output	Alarm A setpoint	Alarm B setpoint	Error contact
mm/s	%	☐ 0 to 20 mA ☐ 4 to 20 mA	☐ Working current Quiescent current	☐ Working current Quiescent current	☐ Working current Quiescent current

Frequency [Hz]; unit [_____]		
Cal. point	**Frequency**	**Assign**
1		
2		
3		
4		
5		

Parameter entry				
End of measuring range	**Concentration setpoint**	**Alarm value A**	**Alarm value B**	**Signal filter**

Pause	Return stroke	Manual override	Safety height	Safety period
	☐ Yes ☐ No	☐ Yes ☐ No		

Meas. interval	Meas. period	Cleaning	Cleaning interval	Zero positioning
		☐ Sync ☐ Intern		

Zero point	End point

Calibration – depth		
Measuring direction:	**Comments:**	**Technician:**
☐ From surface ☐ From bottom		

Index

A
Accessories 54
Ambient temperature range 56

C
Certificates and approvals 10
Check
  Function 28
Cleaning 49
Commissioning 28
Connecting the sludge level system 15
Connection
  Check 23
  Ensuring the degree of protection 22
  Sludge level 15
Cover plate 28

D
Degree of protection 22, 56
Depth calibration 30
Designated use 5
Device description 7
Device design 7
Diagnostics 48
Display 25
Disposal 53

E
Electrical connection 15
Environment 56

F
Function 8

H
Hardware wiring 17
Heating power 55

I
Incoming acceptance 9
Inputs 18
Installation 11
  Dimensions 11
Installation conditions
  Sensor guard 30
  Sensor mounting 28

L
Load 55

M
Maintenance 49
Maintenance intervals 49
Materials 56
Max. sensor stroke 56
Maximum measured error 55
Measured variable 55
Measuring range 55
Medium pressure 56
Medium temperature 56
Mounting
  Installation 12
  Post-installation check 14
Mounting on bridge and basin rims 13

N
Nameplate 9

O
Operating concept 25
Operating elements 25
Operation options 24
  Main menu 26
Output signal 55
Outputs 18

P
Power consumption 55
Process conditions 56
Process error messages 48
Product identification 9
Product safety 5
Profile run 20
Proximity switch 32

R
Repair 53
Repeatability 55
Return 53

S
Safety instructions 5
Safety warnings 4
Scope of delivery 10
Scraper function 20
Sensor mounting 28
Sensor replacement 50
Sensor speed 56
Signal inputs 55
Spare parts 53
Supply voltage 55
Switch on 28
Switch outputs 55
Symbols 4

T
Technical data 55
Terminal assignment 15
Tracking unit 56
Transportation lock 28
Troubleshooting 48
Troubleshooting instructions 48

U

Use 5

W

Wall mounting 13
Wavelength 55
Weight 56



www.addresses.endress.com

Endress+Hauser

People for Process Automation