TI01893C/07/EN/01.26-00
71777271
2026-07-08

Technical Information
DPD analyzer module CA75

Measurement of free chlorine or total chlorine using the DPD method



Field of application

- Disinfection monitoring in drinking water treatment
- Measuring the chlorine content in secondary water supply systems
- Monitoring of process and service water in the food and beverage industry
- Chlorine monitoring in industrial water circuits
- Analysis of chlorine content in water reuse

The analyzer module is designed exclusively for aqueous samples.

Benefits

- **Meets regulatory requirements worldwide** – thanks to the officially recognized DPD method
- **Save space and reduce costs:** Add additional Memosens sensors (e.g. for measuring pH or turbidity) to your measuring point
- **Seamless integration** via fieldbus protocols such as Modbus RTU, PROFIBUS DP, EtherNet/IP and others
- **Simple commissioning:** Connect the DPD analyzer module like a fixed cable sensor to a Liquiline CM44x transmitter.
- **Low maintenance thanks to factory calibration:** No regular calibration required
- **Reagent levels visible at all times:** The transparent door allows quick and easy visual inspection.

Endress+Hauser
People for Process Automation

Table of contents

Function and system design 3
Measuring principle 3
Measuring system 4
Reliability 4

Input 5
Measured variable 5
Measuring range 5

Power supply 5
Type of supply 5
Supply voltage 5
Power consumption 5

Performance characteristics 6
Measurement error 6
Repeatability 6
Detection limit and limit of quantification 6
Reagent requirement 6

Installation 6
Installation instructions 6

Environment 6
Ambient temperature 6
Storage temperature 6
Degree of protection 6
Electromagnetic compatibility 6
Device safety 6

Process 7
Process temperature 7
Process pressure 7
Flow 7

Mechanical construction 7
Dimensions 7
Weight 7
Materials 8

Certificates and approvals 8
Compliance with drinking water and wastewater monitoring standards 8

Ordering information 8
Product page 8
Product configurator 8
Scope of delivery 9

Accessories 9
Accessories mounted or enclosed 9
Device-specific accessories 9

Function and system design

Measuring principle

The analyzer operates using the DPD method. This method is recognized internationally for determining free and total chlorine in aqueous samples. It is based on the reaction of the reagent N,N-Diethyl-p-phenylenediamine (DPD) with chlorinated oxidizing agents. Under defined conditions, these agents produce a pink color. The intensity of the color corresponds to the chlorine concentration.

How the color is produced

Free chlorine oxidizes the added DPD to form a colored diimine derivative. The dye that is produced is sufficiently stable to allow a precise photometric evaluation. At the same time, the dye is sensitive to chlorine-demanding substances. Therefore, the analyzer monitors the reactions using precise timing control to ensure reproducible signal development.

Photometric measurement

There is a continuous flow through the measuring cell. The reagent is added after sampling. The light source emits light in the visible spectrum through the sample. A detector measures the absorption at the relevant wavelength. The absorption value increases as the color concentration increases. The analyzer converts the absorption value into a chlorine measured variable using a calibration curve. The system is flushed after the measurement.

Determining free chlorine or total chlorine

Free chlorine is determined directly after the DPD is added.
The reagent for total chlorine contains an additional component. This component converts bound chlorine compounds (e.g., chloramines) into free chlorine, which reacts with the DPD.

Cross-sensitivity

The ions listed were checked with the specified concentrations. A summary effect has not been studied. No cross-sensitivities were observed up to the concentration levels indicated.

Concentration	Substance
1000 mg/l (ppm)	Hardness ($CaCO_3$)

Oxidizing agents such as bromides, permanganates and ozone result in erroneously high readings.

Measuring system

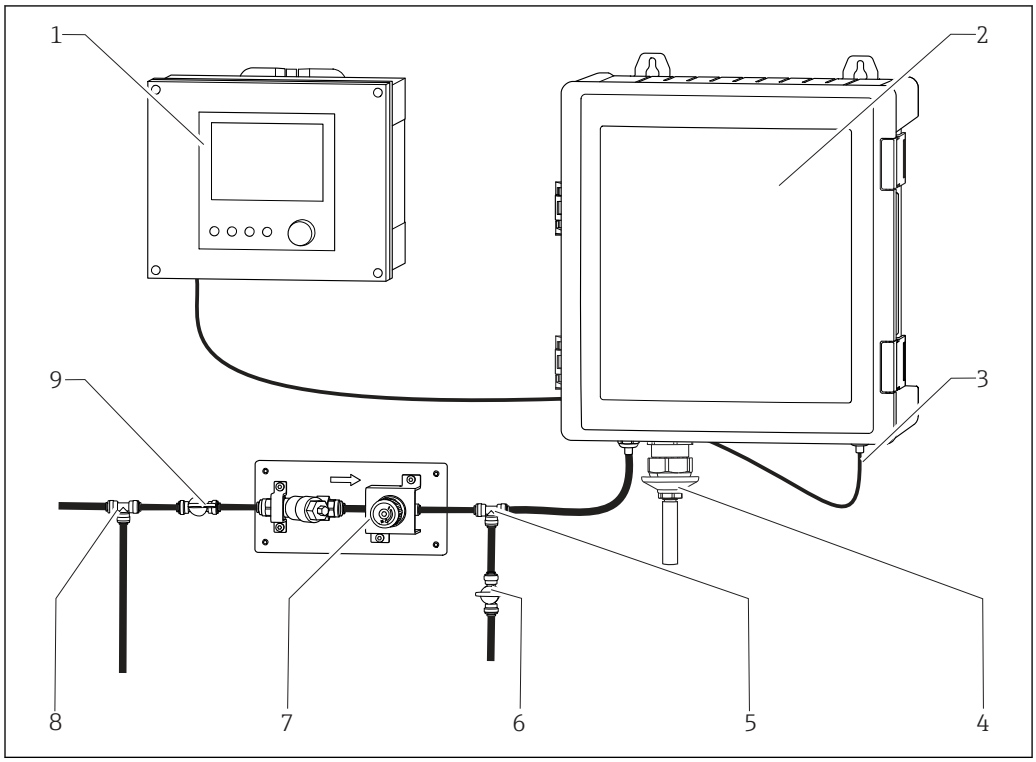

1 *Measuring system*

1 *Liquiline CM44x transmitter (not in scope of delivery, must be ordered separately)*
2 *DPD analyzer module CA75*
3 *Memosens cable (included in delivery, options can be selected)*
4 *Waste outlet with waste hose (included in delivery)*
5 *T-section hose connector (included in delivery)*
6 *Shut-off valve for sampling (included in delivery)*
7 *Sample preparation system with particulate filter (included in delivery)*
8 *T-section hose connector (included in delivery)*
9 *Shut-off valve (included in delivery)*

The T-section (8) located before the shut-off valve (9) ensures that there is always a fresh sample upstream of the shut-off valve. Requirement: The hydraulic resistance of the overflow is greater than the hydraulic resistance to the analyzer so that, despite the T-section, there is always a sufficient sample flow to the analyzer module.

Reliability

Reliable function

The reliability of the analyzer is based on a stable photometric measuring principle, monitored process conditions and integrated diagnostic functions.

Measurements are performed continuously under defined and reproducible conditions. An integrated flow sensor continuously monitors the sample flow.

Factory calibration and the integrated calibration functions ensure stable measurement performance over the entire specified measuring range. This supports reliable operation without the need for regular recalibration.

Diagnostic functions enable continuous monitoring of the system status, for example by checking reagent fill levels. Critical operating statuses are detected at an early stage and appropriate corrective measures are initiated. [1)]

A multicolor status indicator displays the current device status. This facilitates rapid identification of operating, maintenance and fault states and supports safe plant operation.

1) Settings and overview in the CM44x transmitter

Ease of maintenance

The system design allows maintenance work to be carried out easily thanks to its clear layout and readily accessible components. Regular maintenance with minimal effort reduces downtime.

Standardized maintenance kits containing all the necessary wear parts and components are available for recurring maintenance tasks. These kits ensure consistent maintenance quality while reducing organizational effort.

Wear parts, such as pump tubing, reagent lines and filters, are clearly defined and can be replaced individually. The specified maintenance intervals facilitate planned maintenance.

The system also supports preventive maintenance through integrated diagnostic functions, for example by monitoring reagent consumption. Maintenance can therefore be performed as required before a failure occurs.

Maintenance-related tasks include replacing reagents and wear parts, cleaning system components and checking the functionality of individual assemblies.

IT security

We only provide a warranty if the device is installed and used as described in the Operating Instructions . The device is equipped with security mechanisms to protect it against any inadvertent changes to the device settings.

IT security measures in line with operators' security standards and designed to provide additional protection for the device and device data transfer must be implemented by the operators themselves.

Input

Measured variable

Options in the software
- Free chlorine (HOCl)
- Total chlorine

Measuring range

Lower range limit	0 mg/l
Upper range limit	10 mg/l

Power supply

Type of supply

Type of supply	Auxiliary voltage via signal line
Voltage type	Direct current

Supply voltage

Nominal supply voltage	24 V
Minimum supply voltage	20.4 V
Maximum supply voltage	28.8 V

Power consumption

Maximum power consumption	5 W

Performance characteristics

Measurement error

Concentration	Maximum measured error [1]
0 to 5 mg/l	5% or 0.04 mg/l [2]
5.1 to 10 mg/l	10%

1) Measured according to ISO 15839 under laboratory conditions with standard solutions
2) The higher value counts.

Repeatability

Repeatability [1]	0.01 mg/l or 5% [2]

1) Measured according to ISO 15839 under laboratory conditions with standard solutions
2) The higher value counts.

Detection limit and limit of quantification

Detection limit [1]	0.018 mg/l
Limit of quantification [1]	0.06 mg/l

1) Measured according to ISO 15839 under laboratory conditions with standard solutions

Reagent requirement

Per measurement	0.027 ml

Installation

Installation instructions

- If mounting on a wall, make sure that the wall has sufficient load-bearing capacity and is fully perpendicular.
- Protect the device against additional heating (e.g. from heaters).
- Protect the device against mechanical vibrations.
- Protect the device against corrosive gases, e.g. hydrogen sulfide (H_2S) .

Environment

Ambient temperature

Minimum ambient temperature	5 °C (41 °F)
Maximum ambient temperature	40 °C (104 °F)

Storage temperature

Minimum storage temperature	5 °C (41 °F)
Maximum storage temperature	40 °C (104 °F)

Degree of protection

IP66

Electromagnetic compatibility

EN 61326-1

Device safety

IEC 61010-1

Process

Process temperature

Minimum process temperature	5 °C (41 °F)
Maximum process temperature	40 °C (104 °F), for example

Process pressure

Minimum process pressure (abs.)	0.3 bar (4.4 psi)
Maximum process pressure (abs.)	5.2 bar (75.4 psi) [1]

1) Applies up to the inlet of the sample preparation system. A flow rate of 60 to 200 ml/min must be set in the device using the pressure-reducing valve of the sample preparation system.

Flow

Minimum flow	60 ml/min (0.95 gal/hr)
Maximum flow	200 ml/min (3.17 gal/hr)

Mechanical construction

Dimensions

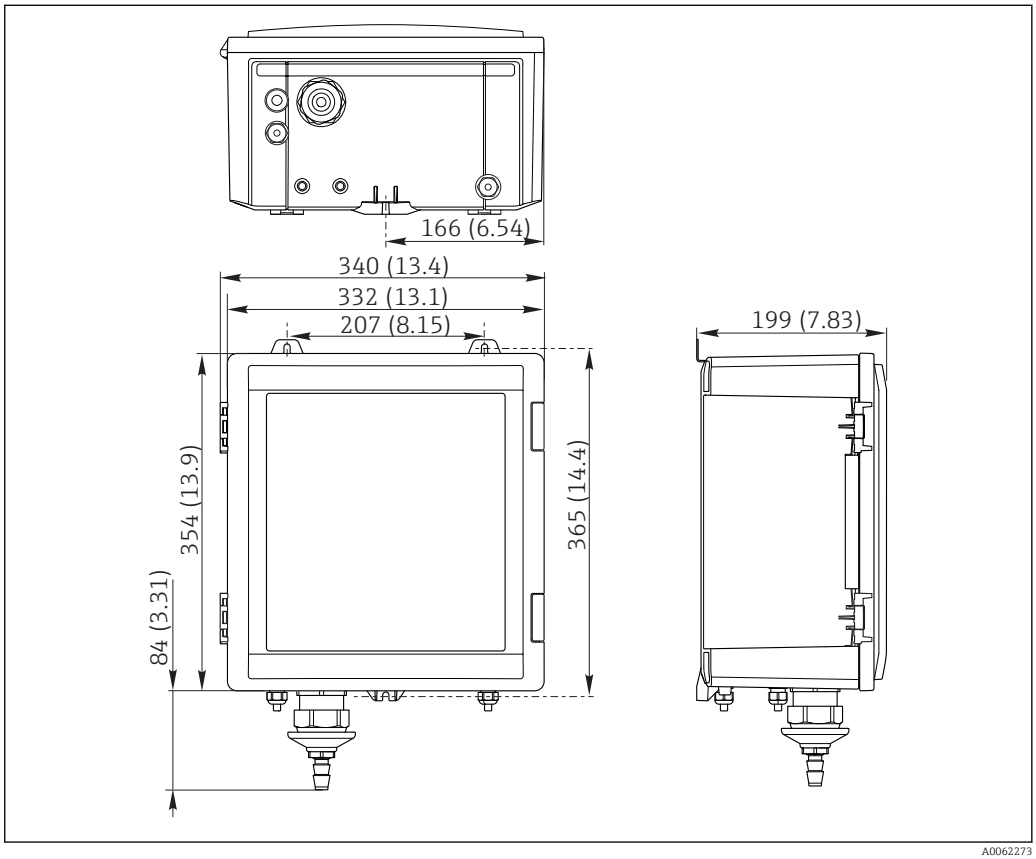

2 *Analyzer module dimensions. Unit of measurement mm (in)*

Weight

Minimum weight	5.35 kg (11.8 lbs) [1]
Maximum weight	6.52 kg (14.4 lbs) [2]
Weight of sample preparation system	0.52 kg (1.15 lbs)

1) Analyzer module, reagent bottles empty, without sample preparation system
2) Analyzer module, reagent bottles completely full, without sample preparation system

Materials

Parts in contact with medium	
Sample valve	NBR (nitrile-butadiene rubber), PPS (polyphenylene sulfide)
Photometer	Borosilicate, PC (polycarbonate), EPDM (ethylene-propylene-diene rubber)
Sample hose	C-flex (thermoplastic elastomer)
Sample inlet hose	TPU (thermoplastic polyurethane)
Flowmeter	PP (polypropylene)
Waste funnel	PC (polycarbonate)
Waste hose	PVC (polyvinyl chloride)
Reagent hose	PharMed BPT (polybutylene terephthalate, thermoplastic elastomer)
Magnetic stirrer	PTFE (polytetrafluoro-ethylene)

Parts not in contact with medium	
Housing	PC (polycarbonate)
Carrier plate	PP MF30 (polypropylene, mineral-reinforced)
Bottle carrier	PP MF30 (polypropylene, mineral-reinforced)
Peristaltic pump	Stainless steel, PVDF (polyvinylidene fluoride)
Door clip	PA66 GF30 (polyamide 66, fiber-glass reinforced)

Certificates and approvals

Compliance with drinking water and wastewater monitoring standards

The measurement method of the DPD analyzer module CA75 complies with the following standard methods:
- 40 CFR 141.74; 4500-CL-G; US EPA 334.0; ISO 7393-2 for drinking water monitoring
- 40 CFR 136.3; 4500-CL-G; ISO 7393-2 for wastewater monitoring

Ordering information

Product page

www.endress.com/CA75

Product configurator

1. **Configure**: Click this button on the product page.
2. Select **Extended selection**.
   ↳ The Configurator opens in a separate window.
3. Configure the device according to your requirements by selecting the desired option for each feature.
   ↳ In this way, you receive a valid and complete order code for the device.
4. **Accept**: Add the configured product to the shopping cart.

For many products, you also have the option of downloading CAD or 2D drawings of the selected product version.

5. **CAD**: Open this tab.
   ↳ The drawing window is displayed. You have a choice between different views. You can download these in selectable formats.

Scope of delivery

The scope of delivery comprises:
- DPD analyzer module CA75 in the ordered version
- Mounted and enclosed accessories (→ 9)
- Operating Instructions, BA02616C

A CM44x transmitter is required for a complete measuring point. It must be ordered separately. Use the configurator on the product page at www.endress.com.

Accessories

Accessories mounted or enclosed

Accessories enclosed
- Accessories for mounting the analyzer module
  - 2 x wall bracket
  - 4 x stainless steel screw 5 x 15 mm (A2)
  - Stainless steel screw for wall mounting
- Accessories for sample supply and sample discharge
  - Hose for sample supply, PUN-H, length 5 m, OD 6 mm, ID 4 mm, black
  - Hose for sample discharge, PVC, length 2 m, ID 13 mm, OD 17 mm
  - Sample preparation system CA75
  - 2 x T-section hose connector, OD 6 mm, use optional
  - 2 x shut-off valve, straight, OD 6 mm, use optional
- Accessories for analyzer function
  - Magnetic stirrer, PTFE, 3 x 8 mm
  - Bottle carrier
  - 2 x reagent bottle, HDPE (natural), 500 ml, DN45
  - 2 x reagent hose set
- Accessories for maintenance work
  - 5 x Pasteur pipette, plastic, 3 ml
  - Syringe with a Luer lock connector, plastic, 50 ml
  - 2 x Luer lock female fitting, ID 3.2 mm
  - 2 x C-flex hose, length 0.25 m, ID 3.2 mm
  - 10 swabs with small tip, length 58 mm, tip 12 x 4 mm

Mounted accessories

Memosens cable, mounted and wired at the factory

Device-specific accessories

Device-specific accessories
- CAV750
  - Maintenance kit CA75 DPD
  - Hoses and pump head
  - Order according to product order structure
- CY75
  - Reagents and standard solutions
  - Order according to product order structure
- CY800-AK**
  - Cleaning solution
  - Order according to product order structure



www.addresses.endress.com

Endress+Hauser

People for Process Automation