TI01118T/09/EN/02.19
71443145
2019-06-05

Technical Information
Omnigrad M TR12, TC12

Modular thermometer



TR12 with resistance insert (RTD)
TC12 with thermocouple insert (TC)
with thermowell and compression fitting

Application
- Universal range of application
- Measuring range:
  - Resistance insert (RTD): −200 to 600 °C (−328 to 1 112 °F)
  - Thermocouple (TC): −40 to 1 100 °C (−40 to 2 012 °F)
- Pressure range up to 40 bar (580 psi)
- Degree of protection up to IP68

Head transmitter

All Endress+Hauser transmitters are available with enhanced accuracy and reliability compared to directly wired sensors. Easy customizing by choosing one of the following outputs and communication protocols:

- Analog output 4 to 20 mA
- HART®
- PROFIBUS® PA
- FOUNDATION Fieldbus™

Your benefits
- High degree of flexibility thanks to modular design with standard terminal heads as per DIN EN 50446 and customer-specific immersion lengths
- High degree of compatibility and design as per DIN 43772
- Fast response time with reduced/tapered tip form
- Types of protection for use in hazardous locations:
  - Intrinsic Safety (Ex ia)
  - Non-sparking (Ex nA)

Endress+Hauser
People for Process Automation

Function and system design

Measuring principle

Resistance thermometer (RTD)

These resistance thermometers use a Pt100 temperature sensor according to IEC 60751. The temperature sensor is a temperature-sensitive platinum resistor with a resistance of 100 Ω at 0 °C (32 °F) and a temperature coefficient α = 0.003851 $°C^{-1}$.

There are generally two different kinds of platinum resistance thermometers:

- **Wire wound (WW):** Here, a double coil of fine, high-purity platinum wire is located in a ceramic support. This is then sealed top and bottom with a ceramic protective layer. Such resistance thermometers not only facilitate very reproducible measurements but also offer good long-term stability of the resistance/temperature characteristic within temperature ranges up to 600 °C (1 112 °F). This type of sensor is relatively large in size and it is comparatively sensitive to vibrations.
- **Thin film platinum resistance thermometers (TF):** A very thin, ultrapure platinum layer, approx. 1 µm thick, is vaporized in a vacuum on a ceramic substrate and then structured photolithographically. The platinum conductor paths formed in this way create the measuring resistance. Additional covering and passivation layers are applied and reliably protect the thin platinum layer from contamination and oxidation, even at high temperatures.

The primary advantages of thin film temperature sensors over wire wound versions are their smaller sizes and better vibration resistance. A relatively low principle-based deviation of the resistance/temperature characteristic from the standard characteristic of IEC 60751 can frequently be observed among TF sensors at high temperatures. As a result, the tight limit values of tolerance category A as per IEC 60751 can only be observed with TF sensors at temperatures up to approx. 300 °C (572 °F).

Thermocouples (TC)

Thermocouples are comparatively simple, robust temperature sensors which use the Seebeck effect for temperature measurement: if two electrical conductors made of different materials are connected at a point, a weak electrical voltage can be measured between the two open conductor ends if the conductors are subjected to a thermal gradient. This voltage is called thermoelectric voltage or electromotive force (emf.). Its magnitude depends on the type of conducting materials and the temperature difference between the "measuring point" (the junction of the two conductors) and the "cold junction" (the open conductor ends). Accordingly, thermocouples primarily only measure differences in temperature. The absolute temperature at the measuring point can be determined from these if the associated temperature at the cold junction is known or is measured separately and compensated for. The material combinations and associated thermoelectric voltage/temperature characteristics of the most common types of thermocouple are standardized in the IEC 60584 and ASTM E230/ANSI MC96.1 standards.

Measuring system

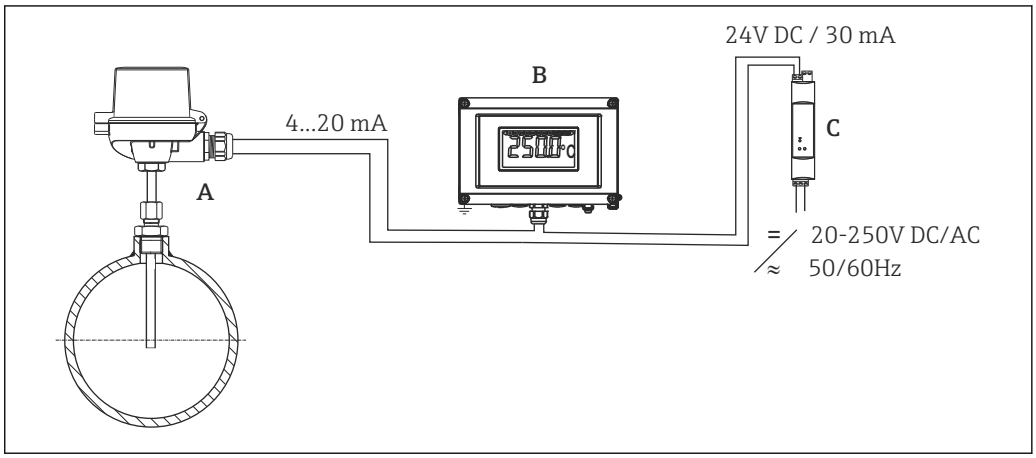

A0009647

1 Application example

A Thermometer with built-in head transmitter
B RIA16 field display unit - The display unit records the analog measuring signal from the head transmitter and shows this on the display. The LC display shows the current measured value in digital form and as a bar graph indicating a limit value violation. The display unit is looped into the 4 to 20 mA circuit and gets the required energy from there. More information on this can be found in the Technical Information (see "Documentation").
C Active barrier RN221N - The RN221N active barrier (24 V DC, 30 mA) has a galvanically isolated output for powering 2-wire transmitters. The universal power supply works with an input supply voltage of 20 to 250 V DC/AC, 50/60 Hz, which means that it can be used in all international power grids. More information on this can be found in the Technical Information (see "Documentation").

Design

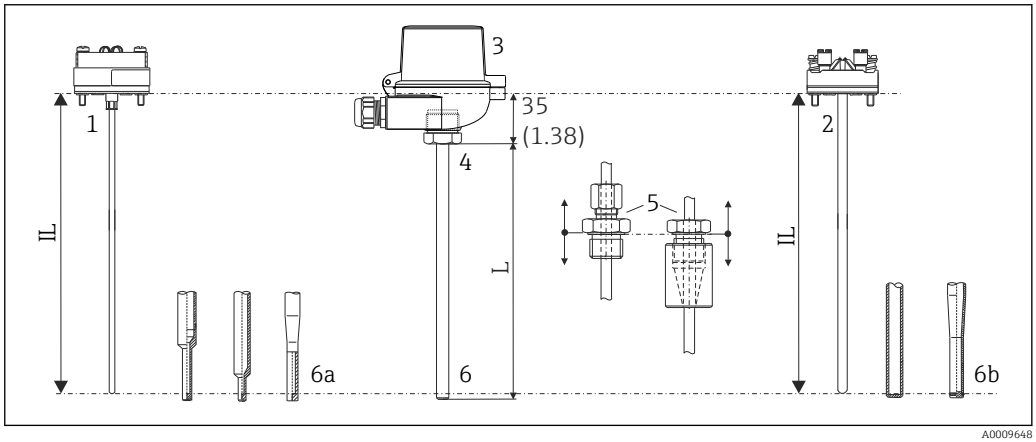

A0009648

2 Thermometer design

1 Insert with mounted head transmitter (example with Φ3 mm (0.12 in))
2 Insert with mounted ceramic terminal block (example with Φ6 mm (0.24 in))
3 Terminal head
4 Protective assembly
5 Process connection: compression fittings TA50, TA70
6 Various tip shapes - for detailed information see "Shape of tip" section:
6a Reduced or tapered tip for inserts with Φ3 mm (0.12 in)
6b Straight or tapered tip for inserts with Φ6 mm (0.24 in)
L Immersion length
IL Insertion length = L + 35 mm (1.38 in)

Thermometers from the Omnigrad M TR12 and TC12 series have a modular design. The terminal head is used as a connection module for the mechanical and electrical connection of the insert. The position of the actual thermometer sensor in the insert ensures that it is mechanically protected. The insert can be replaced or calibrated without interrupting the process. Either ceramic terminal blocks or transmitters can be fitted to the internal terminal block. The thermometer can be mounted on a pipe or tank using a compression fitting. The most commonly used compression fittings are available for installation → 19.

Input

Measuring range

RTD resistance thermometers

Sensor type	Measuring range	Connection type	Temperature-sensitive length
Pt100 (IEC 60751, TF) iTHERM StrongSens	−50 to +500 °C (−58 to +932 °F)	3- or 4-wire	7 mm (0.27 in)
Pt100 thin-film sensor (TF)	−50 to 400 °C (−58 to 752 °F)	3- or 4-wire	10 mm (0.39 in)
Pt100 wire-wound sensor (WW)	−200 to 600 °C (−328 to 1 112 °F)	3- or 4-wire	10 mm (0.39 in)

TC thermocouples:

Sensor type	Measuring range	Connection type	Temperature-sensitive length
Thermocouple type K	−40 to +1 100 °C (−40 to +2 012 °F)	Grounded or insulated connection	Insert length
Thermocouple type J	−40 to +750 °C (−40 to +1 382 °F)	Grounded or insulated connection	Insert length

Performance characteristics

Operating conditions

Ambient temperature range

Terminal head	Temperature in °C (°F)
Without mounted head transmitter	Depends on the terminal head used and the cable gland or fieldbus connector, see 'Terminal heads' section
With mounted head transmitter	−40 to 85 °C (−40 to 185 °F)
With mounted head transmitter and display	−20 to 70 °C (−4 to 158 °F)

Process pressure

The maximum process pressure depends on the process connection used. See the "Process connection" section for an overview of the process connections that can be used→ 19.

Maximum flow velocity

The maximum flow velocity tolerated by the thermowell diminishes with increasing immersion of the sensor in the liquid flow. See the figures below for more detailed information.

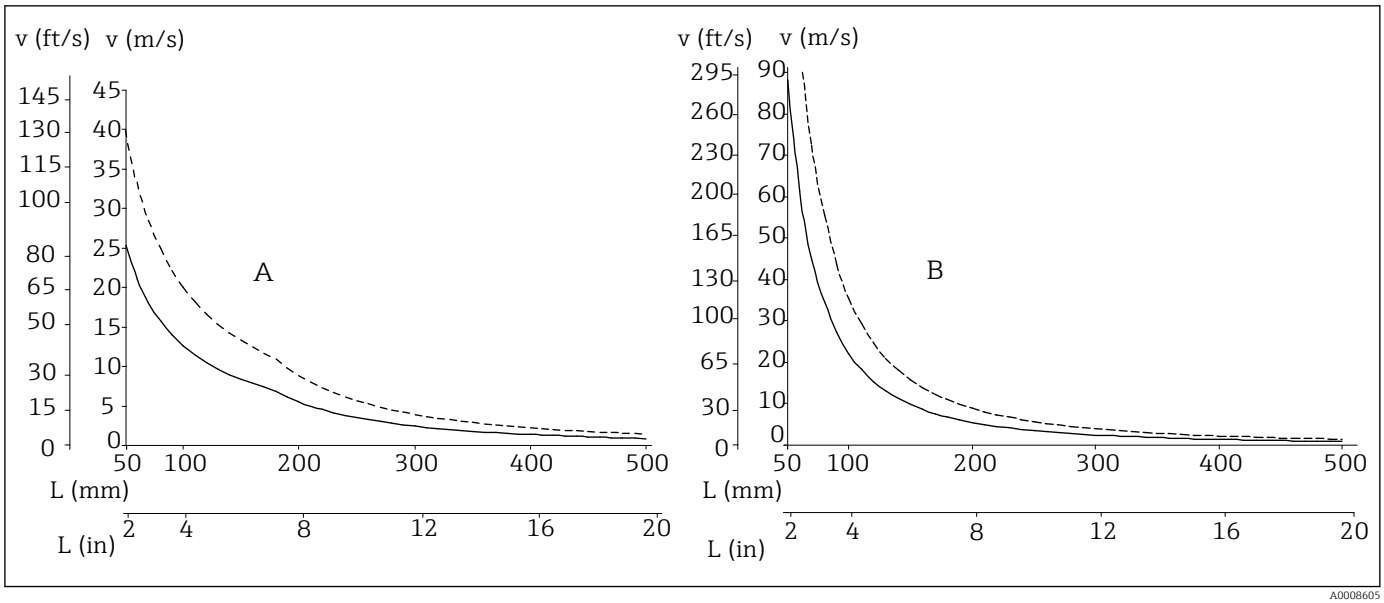

3 Flow velocity depending on the immersion depth

A Medium water at T = 50 °C (122 °F)
B Medium superheated steam at T = 400 °C (752 °F)
L Immersion length
v Flow velocity
___ Thermowell diameter 9 x 1 mm (0.35 in)
- - - Thermowell diameter 12 x 2.5 mm (0.47 in)

Shock and vibration resistance

The Endress+Hauser inserts meet the requirements of IEC 60751, which specify shock and vibration resistance of 3g in the range from 10 to 500 Hz.

The vibration resistance at the measuring point depends on the sensor type and design, see the following table:

Version	Vibration resistance for the sensor tip
Pt100 (WW or TF)	30 m/s^2 (3g) [1]
iTHERM® StrongSens Pt100 (TF) iTHERM® QuickSens Pt100 (TF), version: Φ6 mm (0.24 in)	> 600 m/s^2 (60g) for sensor tip

1) vibration resistance also applies to the quick-fastening iTHERM QuickNeck

Accuracy

Permissible deviation limits of thermoelectric voltages from the standard characteristic for thermocouples as per IEC 60584 or ASTM E230/ANSI MC96.1:

Standard	Type	Standard tolerance		Special tolerance	
IEC 60584		Class	Deviation	Class	Deviation
	J (Fe-CuNi)	2	±2,5 °C (−40 to 333 °C) ±0,0075 |t| [1] (333 to 750 °C)	1	±1,5 °C (−40 to 375 °C) ±0,004 |t| [1] (375 to 750 °C)
	K (NiCr-NiAl)	2	±2,5 °C (−40 to 333 °C) ±0,0075 |t| [1] (333 to 1200 °C)	1	±1,5 °C (−40 to 375 °C) ±0,004 |t| [1] (375 to 1000 °C)

1) |t| = absolute value in °C

Standard	Type	Standard tolerance	Special tolerance
ASTM E230/ANSI MC96.1		Deviation, the larger respective value applies	
	J (Fe-CuNi)	±2,2 K or ±0,0075 |t| [1] (0 to 760 °C)	±1,1 K or ±0,004 |t| [1] (0 to 760 °C)
	K (NiCr-NiAl)	±2,2 K oder ±0,02 |t| [1] (−200 to 0 °C) ±2,2 K or ±0,0075 |t| [1] (0 to 1260 °C)	±1,1 K or ±0,004 |t| [1] (0 to 1260 °C)

1) |t| = absolute value in °C

RTD resistance thermometer as per IEC 60751

Class	max. tolerances (°C)	Characteristics
RTD maximal error Type TF		
Cl. A	± (0,15 + 0,002 · |t| [1)])	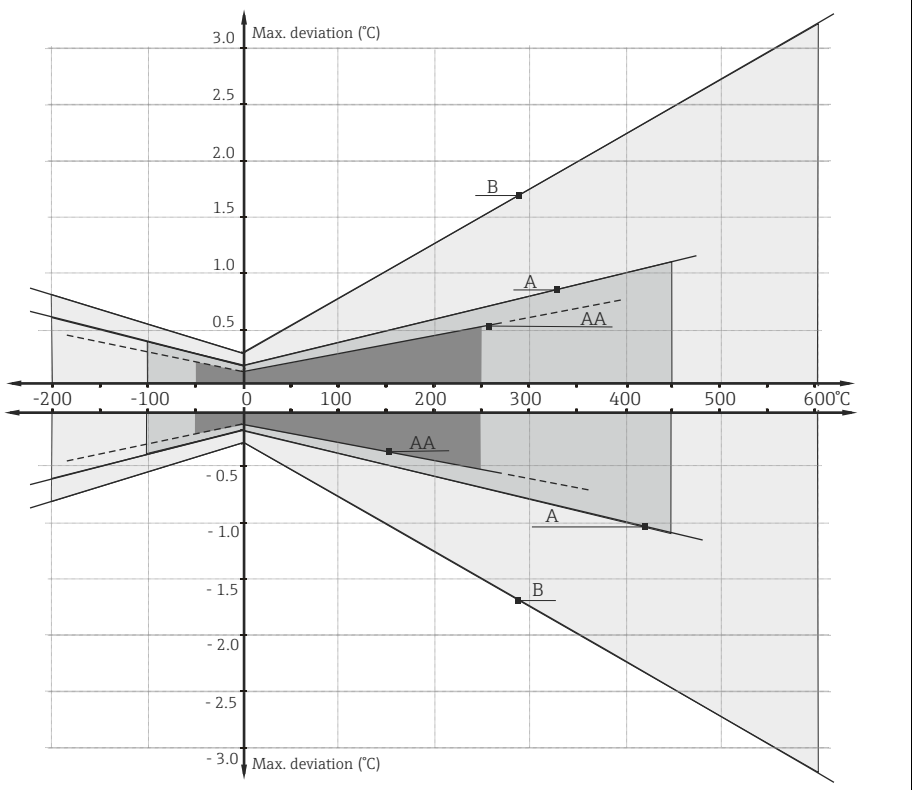
Cl. AA, former 1/3 Kl. B	± (0,1 + 0,0017 · |t|)	
Cl. B	± (0,3 + 0,005 · |t|)	

1) |t| = absolute value in °C

In order to obtain the maximum tolerances in °F, the results in °C must be multiplied by a factor of 1.8.

Response time

Calculated at an ambient temperature of approx. 23 °C by immersing in running water (0.4 m/s flow rate, 10 K excess temperature):

Complete design:

Thermometer type	Diameter	$t_{(x)}$	Reduced tip	Tapered tip	Straight tip
Resistance thermometer (measuring probe Pt100, TF/WW)	9 mm (0.35 in)	t_{50}	7.5 s	11 s	18 s
		t_{90}	21 s	37 s	55 s
	11 mm (0.43 in)	t_{50}	7.5 s	not available	18 s
		t_{90}	21 s	not available	55 s
	12 mm (0.47 in)	t_{50}	not available	11 s	38 s
		t_{90}	not available	37 s	125 s

Thermometer type	Diameter	$t_{(x)}$	Grounded			Not grounded		
			Reduced tip	Tapered tip	Straight tip	Reduced tip	Tapered tip	Straight tip
Thermocouple	9 mm (0.35 in)	t_{50}	5.5 s	9 s	15 s	6 s	9.5 s	16 s
		t_{90}	13 s	31 s	46 s	14 s	33 s	49 s
	11 mm (0.43 in)	t_{50}	5.5 s	not available	15 s	6 s	not available	16 s
		t_{90}	13 s	not available	46 s	14 s	not available	49 s
	12 mm (0.47 in)	t_{50}	not available	8.5 s	32 s	not available	9 s	34 s
		t_{90}	not available	20 s	106 s	not available	22 s	110 s

Response time for insert without transmitter.

Tested in accordance with IEC 60751 in flowing water (0.4 m/s at 30 °C):

Insert:

Sensor type	Diameter ID	Response time	
iTHERM® StrongSens	6 mm (0.24 in)	t_{50}	< 3.5 s
		t_{90}	< 10 s
TF sensor	3 mm (0.12 in)	t_{50}	2.5 s
		t_{90}	5.5 s
	6 mm (0.24 in)	t_{50}	5 s
		t_{90}	13 s
WW sensor	3 mm (0.12 in)	t_{50}	2 s
		t_{90}	6 s
	6 mm (0.24 in)	t_{50}	4 s
		t_{90}	12 s
Thermocouple (TPC100) Grounded	3 mm (0.12 in)	t_{50}	0.8 s
		t_{90}	2 s
	6 mm (0.24 in)	t_{50}	2 s
		t_{90}	5 s
Thermocouple (TPC100) Not grounded	3 mm (0.12 in)	t_{50}	1 s
		t_{90}	2.5 s
	6 mm (0.24 in)	t_{50}	2.5 s
		t_{90}	7 s

Response time for sensor design without transmitter.

Insulation resistance

- RTD:
  Insulation resistance according to IEC 60751 > 100 MΩ at 25 °C between terminals and sheath material measured with a minimum test voltage of 100 V DC
- TC:
  Insulation resistance according to IEC 1515 between terminals and sheath material with a test voltage of 500 V DC:
  - > 1 GΩ at 20 °C
  - > 5 MΩ at 500 °C

Self heating

RTD elements are passive resistances that are measured using an external current. This measurement current causes a self-heating effect in the RTD element itself which in turn creates an additional measurement error. In addition to the measurement current, the size of the measurement error is also affected by the temperature conductivity and flow velocity of the process. This self-heating error is negligible when an Endress+Hauser iTEMP temperature transmitter (very small measurement current) is connected.

Calibration

Endress+Hauser provides comparison temperature calibration from
−80 to +1 400 °C (−110 to +2 552 °F) based on the International Temperature Scale (ITS90).

Calibrations are traceable to national and international standards. The calibration certificate is referenced to the serial number of the thermometer. Only the insert is calibrated.

Insert: Ø6 mm (0.24 in) and 3 mm (0.12 in)	Minimum insertion length of insert in mm (in)	
Temperature range	**without head transmitter**	**with head transmitter**
−80 to 250 °C (−110 to 480 °F)	No minimum immersion length required	
250 to 550 °C (480 to 1020 °F)	300 (11.81)	
550 to 1400 °C (1020 to 2552 °F)	450 (17.72)	

Material

Thermowell, process connection and insert.

The temperatures for continuous operation specified in the following table are only intended as reference values for use of the various materials in air and without any significant compressive load. The maximum operating temperatures are reduced considerably in some cases where abnormal conditions such as high mechanical loads occur, or in aggressive media.

Designation	Short form	Recommended max. temperature for continuous use in air	Properties
AISI 316L/ 1.4404 1.4435	X2CrNiMo17-12-2 X2CrNiMo18-14-3	650 °C (1202 °F) [1]	▪ Austenitic, stainless steel ▪ High corrosion resistance in general ▪ Particularly high corrosion-resistance in chlorine-based and acidic, non-oxidizing atmospheres through the addition of molybdenum (e.g. phosphoric and sulfuric acids, acetic and tartaric acids with a low concentration) ▪ Increased resistance to intergranular corrosion and pitting ▪ Compared to 1.4404, 1.4435 has even higher corrosion resistance and a lower delta ferrite content
AISI 316Ti/ 1.4571	X6CrNiMoTi17-12-2	700 °C (1292 °F) [1]	▪ Properties comparable with AISI316L ▪ The addition of titanium increases resistance to intergranular corrosion even after welding ▪ Broad range of uses in the chemical, petrochemical and oil industries as well as in coal chemistry ▪ Can only be polished to a limited extent, titanium streaks can form
AISI 310/ 1.4841	X15CrNiSi25-20	1100 °C (2012 °F)	▪ Austenitic, stainless steel ▪ Generally well resistant to oxidizing and reducing atmospheres ▪ Due to the higher chromium content, well resistant to oxidizing aqueous solutions and neutral salts melting at higher temperatures ▪ Low resistance to sulfur-containing gases
AISI 316/ 1.4401	X5CrNiMo17-12-2	650 °C (1202 °F) [1]	▪ Austenitic, stainless steel ▪ High corrosion resistance in general ▪ Particularly high corrosion-resistance in chlorine-based and acidic, non-oxidizing atmospheres through the addition of molybdenum (e.g. phosphoric and sulfuric acids, acetic and tartaric acids with a low concentration)

Designation	Short form	Recommended max. temperature for continuous use in air	Properties
Inconel600/ 2.4816	NiCr15Fe	1 100 °C (2 012 °F)	▪ A nickel/chromium alloy with very good resistance to aggressive, oxidizing and reducing atmospheres, even at high temperatures ▪ Resistance to corrosion caused by chlorine gases and chlorinated media as well as many oxidizing mineral and organic acids, sea water etc. ▪ Corrosion from ultrapure water ▪ Not to be used in sulfur-containing atmospheres
Hastelloy C276/ 2.4819	NiMo16Cr15W	1 100 °C (2 012 °F)	▪ Nickel-based alloy with very good resistance to oxidizing and reducing atmospheres, even at high temperatures ▪ Particularly resistant to chlorine gas and chlorides as well as many oxidizing mineral and organic acids
PTFE (Teflon)	Polytetrafluorethylene	200 °C (392 °F)	▪ Resistance to almost all chemicals ▪ High temperature-resistance

1) Can be used to a limited extent up to 800 °C (1472 °F) for low compressive loads and in non-corrosive media. Please contact your Endress+Hauser sales team for further information.

Components

Family of temperature transmitters

Thermometers fitted with iTEMP transmitters are an installation-ready complete solution to improve temperature measurement by significantly increasing accuracy and reliability, when compared to direct wired sensors, as well as reducing both wiring and maintenance costs.

4 to 20 mA head transmitters
They offer a high degree of flexibility, thereby supporting universal application with low inventory storage. The iTEMP transmitters can be configured quickly and easily at a PC. Endress+Hauser offers free configuration software which can be downloaded from the Endress+Hauser Website. More information can be found in the Technical Information.

HART® head transmitters
The transmitter is a 2-wire device with one or two measuring inputs and one analog output. The device not only transfers converted signals from resistance thermometers and thermocouples, it also transfers resistance and voltage signals using HART® communication. Swift and easy operation, visualization and maintenance using universal device configuration tools like FieldCare, DeviceCare or FieldCommunicator 375/475. Integrated Bluetooth® interface for the wireless display of measured values and configuration via E+H SmartBlue (app), optional. For more information, see the Technical Information.

PROFIBUS® PA head transmitters
Universally programmable head transmitter with PROFIBUS® PA communication. Conversion of various input signals into digital output signals. High accuracy over the complete ambient temperature range. The configuration of PROFIBUS PA functions and of device-specific parameters is performed via fieldbus communication. For more information, see the Technical Information.

FOUNDATION Fieldbus™ head transmitters
Universally programmable head transmitter with FOUNDATION Fieldbus™ communication. Conversion of various input signals into digital output signals. High accuracy over the complete ambient temperature range. All transmitters are released for use in all important process control systems. The integration tests are performed in Endress+Hauser's "System World". For more information, see the Technical Information.

Advantages of the iTEMP transmitters:
- Dual or single sensor input (optionally for certain transmitters)
- Pluggable display (optionally for certain transmitters)
- Unsurpassed reliability, accuracy and long-term stability in critical processes
- Mathematical functions
- Monitoring of the thermometer drift, sensor backup functionality, sensor diagnostic functions
- Sensor-transmitter matching for dual sensor input transmitters, based on Callendar/Van Dusen coefficients

Terminal heads

All terminal heads have an internal shape and size in accordance with DIN EN 50446, flat face and a thermometer connection of M24x1.5, G1/2" or 1/2" NPT thread. All dimensions in mm (in). The cable glands in the diagrams correspond to M20x1.5 connections. Specifications without head transmitter installed. For ambient temperatures with built-in head transmitter, see the "Operating conditions" section.

TA30A	Specification
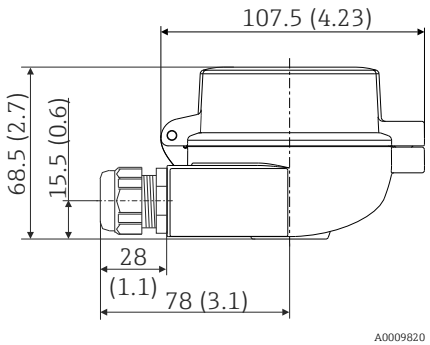	▪ Degree of protection: ▪ IP66/68 (NEMA Type 4x encl.) ▪ For ATEX: IP66/67 ▪ Temperature: −50 to +150 °C (−58 to +302 °F) without cable gland ▪ Material: aluminum, polyester powder coated Seals: silicone ▪ Cable entry thread: G ½", ½" NPT and M20x1.5; ▪ Cable entry plug: M12x1 PA, 7/8" FF ▪ Protective fitting connection: M24x1.5 ▪ Color of head: blue, RAL 5012 ▪ Color of cap: gray, RAL 7035 ▪ Weight: 330 g (11.64 oz) ▪ Ground terminal, internal and external ▪ Available with sensors with 3-A® symbol

TA30A with display window in cover	Specification
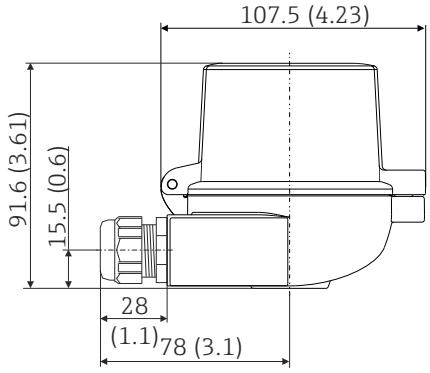	▪ Degree of protection: ▪ IP66/68 (NEMA Type 4x encl.) ▪ For ATEX: IP66/67 ▪ Temperature: −50 to +150 °C (−58 to +302 °F) without cable gland ▪ Material: aluminum, polyester powder coated Seals: silicone ▪ Cable entry thread: G ½", ½" NPT and M20x1.5 ▪ Cable entry plug: M12x1 PA, 7/8" FF ▪ Protective fitting connection: M24x1.5 ▪ Color of head: blue, RAL 5012 Color of cap: gray, RAL 7035 ▪ Weight: 420 g (14.81 oz) ▪ With TID10 display ▪ Ground terminal, internal and external ▪ Available with sensors with 3-A® symbol

TA30D	Specification
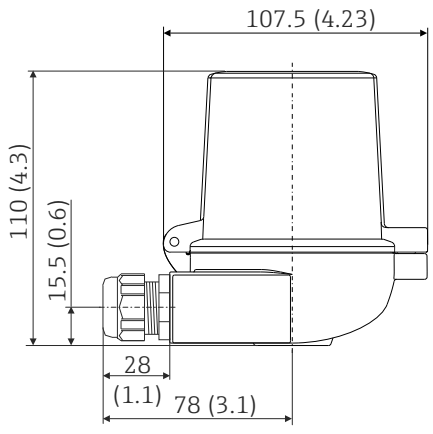	▪ Degree of protection: ▪ IP66/68 (NEMA Type 4x encl.) ▪ For ATEX: IP66/67 ▪ Temperature: −50 to +150 °C (−58 to +302 °F) without cable gland ▪ Material: aluminum, polyester powder coated Seals: silicone ▪ Cable entry thread: G ½", ½" NPT and M20x1.5 ▪ Cable entry plug: M12x1 PA, 7/8" FF ▪ Protective fitting connection: M24x1.5 ▪ Two head transmitters can be mounted. In the standard configuration one transmitter is mounted in the terminal head cover and an additional terminal block is installed directly on the insert. ▪ Color of head: blue, RAL 5012 ▪ Color of cap: gray, RAL 7035 ▪ Weight: 390 g (13.75 oz) ▪ Ground terminal, internal and external ▪ Available with sensors with 3-A® symbol

TA30P	Specification
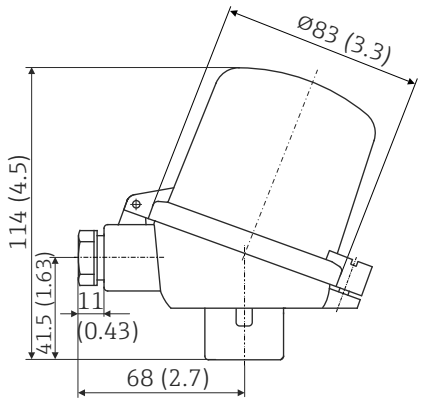	▪ Protection class: IP65 ▪ Max. temperature: −40 to +120 °C (−40 to +248 °F) ▪ Material: polyamide (PA), antistatic Seals: silicone ▪ Threaded cable entry: M20x1.5 ▪ Protection armature connection: M24x1.5 ▪ Two head transmitters can be mounted. In the standard version, one transmitter is mounted in the terminal head cover and an additional terminal block is installed directly on the insert. ▪ Head and cap color: black ▪ Weight: 135 g (4.8 oz) ▪ Types of protection for use in hazardous locations: Intrinsic Safety (G Ex ia) ▪ Ground terminal: only internal via auxiliary clamp ▪ With 3-A® symbol

TA20B	Specification
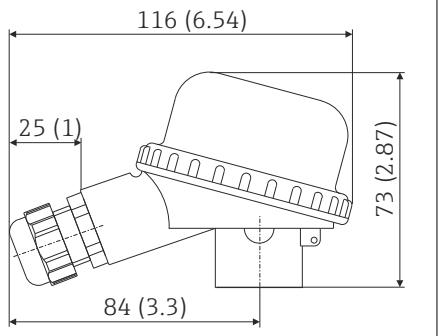	▪ Protection class: IP65 ▪ Max. temperature: −40 to +80 °C (−40 to +176 °F) without cable gland ▪ Material: polyamide (PA) ▪ Cable entry: M20x1.5 ▪ Head and cap color: black ▪ Weight: 80 g (2.82 oz) ▪ 3-A® marked

TA21E	Specification
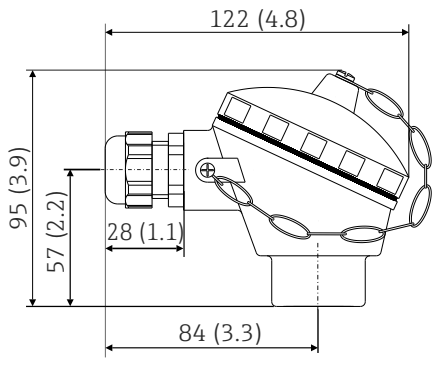	▪ Protection class: IP65 (NEMA Type 4x encl.) ▪ Temperature: −40 to 130 °C (−40 to 266 °F) silicone, up to 100 °C (212 °F) rubber seal without cable gland (observe max. permitted temperature of the cable gland!) ▪ Material: aluminum alloy with polyester or epoxy coating, rubber or silicone seal under the cover ▪ Cable entry: M20x1.5 or plug M12x1 PA ▪ Protection armature connection: M24x1.5, G 1/2" or NPT 1/2" ▪ Head color: blue, RAL 5012 ▪ Cap color: gray, RAL 7035 ▪ Weight: 300 g (10.58 oz) ▪ 3-A® marked

TA20R	Specification
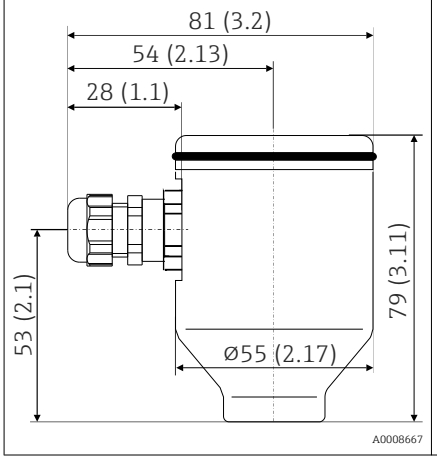	▪ Protection class: IP66/67 ▪ Max. temperature: −40 to +100 °C (−40 to +212 °F) without cable gland ▪ Material: SS 316L (1.4404) stainless steel ▪ Cable entry: 1/2" NPT, M20x1.5 or plug M12x1 PA ▪ Head and cap color: stainless steel ▪ Weight: 550 g (19.4 oz) ▪ LABS-free ▪ 3-A® marked

Maximum ambient temperatures for cable glands and fieldbus connectors	
Type	**Temperature range**
Cable gland ½" NPT, M20x1.5 (non Ex)	−40 to +100 °C (−40 to +212 °F)
Cable gland M20x1.5 (for dust ignition-proof area)	−20 to +95 °C (−4 to +203 °F)
Fieldbus connector (M12x1 PA, 7/8" FF)	−40 to +105 °C (−40 to +221 °F)

Design

All dimensions in mm (in).

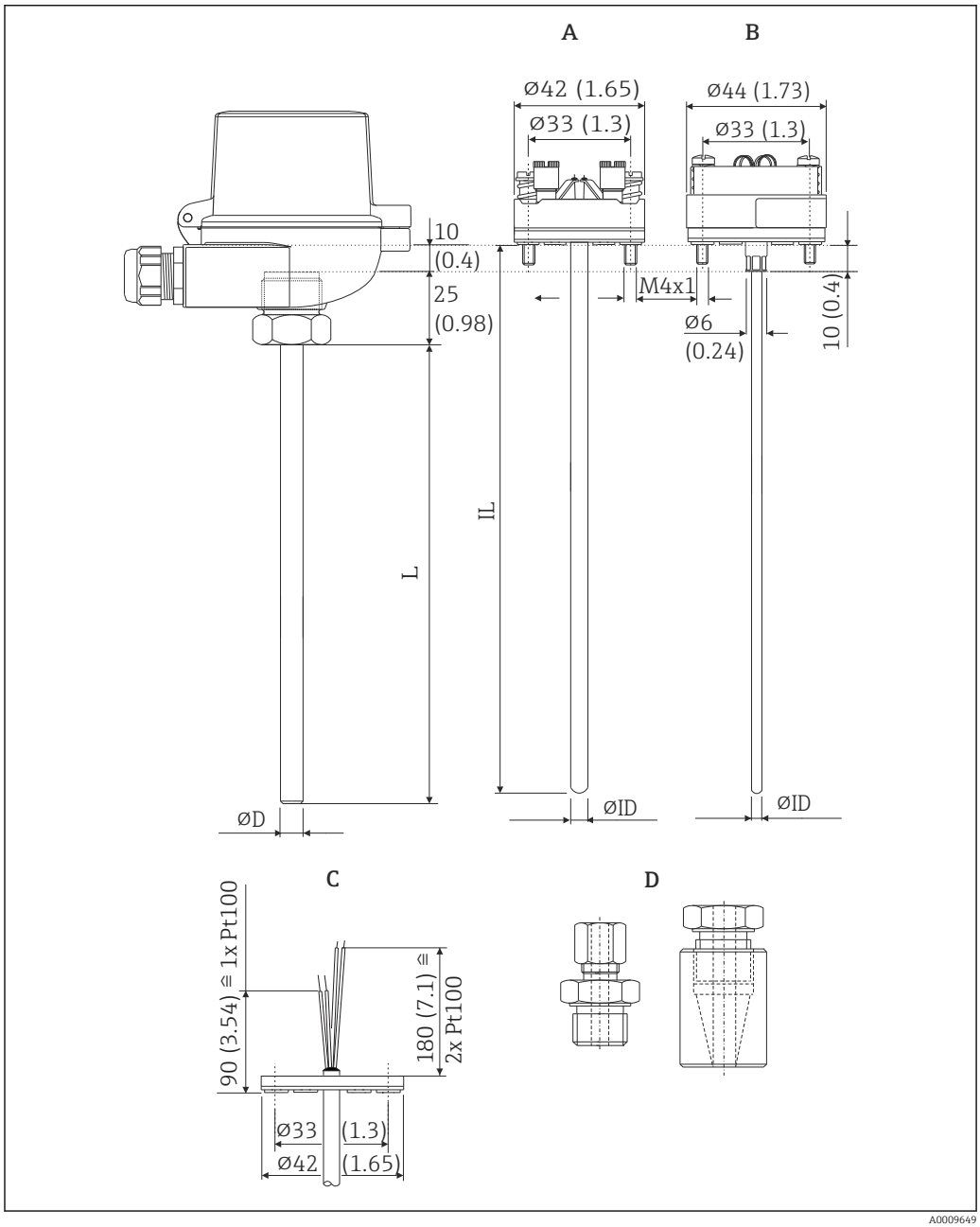

4 Dimensions of the Omnigrad M TR12 and TC12

A Insert with terminal block mounted
B Insert with head transmitter mounted
C Insert with flying leads
D Compression fittings
ØID Insert diameter
IL Insertion length = L + 35 mm (1.38 in)
L Immersion length
ØD Thermowell diameter

Tip shape

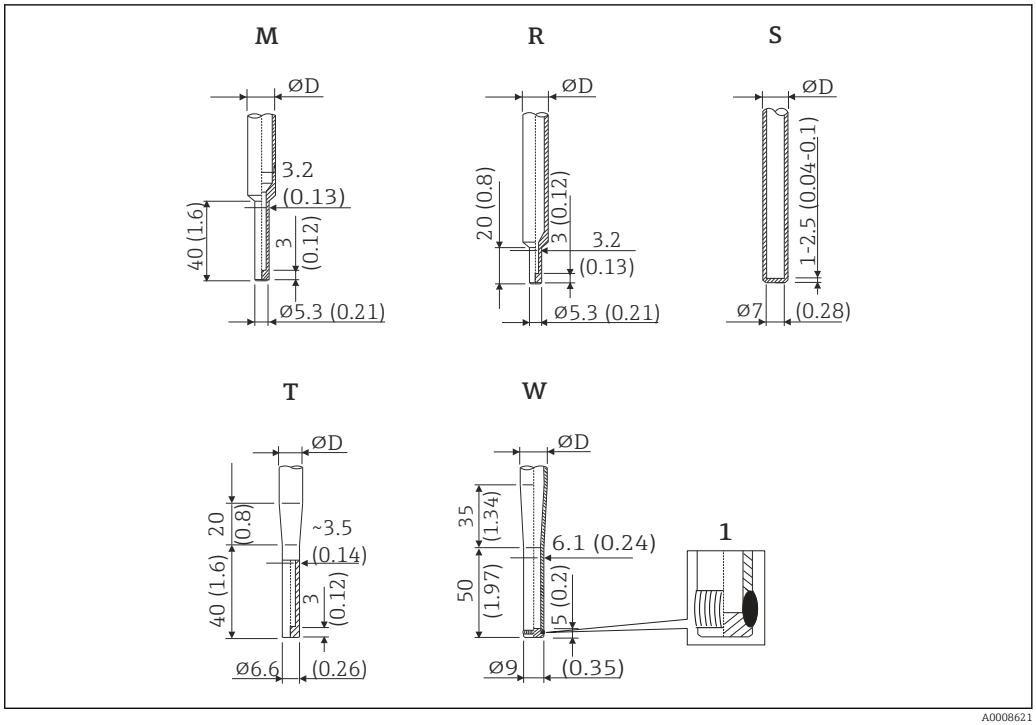

5 Thermowell tips available (reduced, straight or tapered). Maximum surface roughness Ra ≤ 0.8 µm (31.5 µin)

1 Welded seam, welded seam quality according to EN ISO 5817 - quality level B

Item	Tip shape, L = immersion depth	ØD = thermowell diameter	ØID = insert diameter
M	Reduced, L ≥ 50 mm (1.97 in)	Ø9 mm (0.35 in) Ø11 mm (0.43 in)	Ø3 mm (0.12 in)
R	Reduced, L ≥ 30 mm (1.18 in)	Ø9 mm (0.35 in)	Ø3 mm (0.12 in)
S	Straight, according to DIN 43772	Ø9 mm (0.35 in) Ø11 mm (0.43 in) Ø12 mm (0.47 in) Ø14 mm (0.55 in) Ø15 mm (0.59 in)	Ø6 mm (0.24 in)
T	Tapered, L ≥ 70 mm (2.76 in)	Ø9 mm (0.35 in)	Ø3 mm (0.12 in)
W	Tapered, according to DIN 43772-3G, L ≥ 90 mm (3.54 in)	Ø12 mm (0.47 in)	Ø6 mm (0.24 in)

Insert Different inserts are available for the thermometer depending on the application:

RTD				
Sensor	**Standard thin-film**	**iTHERM® StrongSens**	**Wire wound**	
Sensor design; connection method	*1x Pt100, 3- or 4-wire, mineral insulated*	*1x Pt100, 3- or 4-wire, mineral insulated*	*1x Pt100, 3- or 4-wire, mineral insulated*	*2x Pt100, 3-wire, mineral insulated*
Vibration resistance of the insert tip	*Up to 3g*	*Enhanced vibration resistance > 60g*	*Up to 3g*	
Measuring range; accuracy class	*−50 to +400 °C (−58 to +752 °F), Class A or AA*	*−50 to +500 °C (−58 to +932 °F), Class A or AA*	*−200 to +600 °C (−328 to +1 112 °F), Class A or AA*	
Diameter	*3 mm (⅛ in), 6 mm (¼ in)*	*6 mm (¼ in)*	*3 mm (⅛ in), 6 mm (¼ in)*	
Insert type	*TPR100*	*iTHERM® TS111*	*TPR100*	

TC				
Selection in the order code	A	B	E	F
Sensor design; material	1x K; INCONEL600	2x K; INCONEL600	1x J; 316L	2x J; 316L
Measuring range according to:				
DIN EN 60584	−40 to 1 200 °C		−40 to 750 °C	
ANSI MC 96.1	0 to 1 250 °C		0 to 750 °C	
TC standard; accuracy	IEC 60584-2; Class 1 ASTM E230-03; special			
Insert type	TPC100			
Diameter	Φ3 mm (0.12 in) or Φ6 mm (0.24 in), depending on the thermowell tip selected			

Weight 0.5 to 2.5 kg (1 to 5.5 lbs) for standard options.

Process connection

The process connection refers to the connection between the thermometer and the process. When a compression fitting is used, the thermometer is pushed through a gland and fixed in place using a clamping ring (can be released) or a metal clamping ring (cannot be released).

Process connection	
Threaded compression fitting (TA50)	Compression fitting with weld-in adapter (TA70)

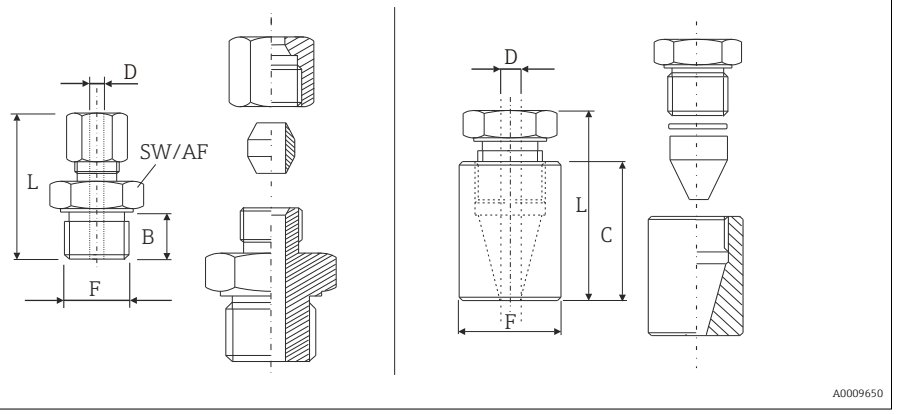

Version	F in mm (in)		L ~ in mm (in)	C in mm (in)	B in mm (in)	Clamping ring material	Max. process temperature	Max. process pressure
TA50	G½"	SW/AF 27	47 (1.85)	-	15 (0.6)	SS316 [1]	800 °C (1472 °F)	40 bar at 20 °C (580 psi at 68 °F)
						PTFE [2]	200 °C (392 °F)	5 bar at 20 °C (72.5 psi at 68 °F)
	G¾"	SW/AF 32	63 (2.48)	-	20 (0.8)	SS316 [1]	800 °C (1472 °F)	40 bar at 20 °C (580 psi at 68 °F)
						PTFE [2]	200 °C (392 °F)	5 bar at 20 °C (72.5 psi at 68 °F)
	G1"	SW/AF 41	65 (2.56)	-	25 (0.98)	SS316 [1]	800 °C (1472 °F)	40 bar at 20 °C (580 psi at 68 °F)
						PTFE [2]	200 °C (392 °F)	5 bar at 20 °C (72.5 psi at 68 °F)
	NPT½"	AF 22/27 [3]	50 (1.97)	-	20 (0.8)	SS316 [1]	800 °C (1472 °F)	40 bar at 20 °C (580 psi at 68 °F)
	R½"	SW/AF 22	52 (2.05)	-	20 (0.8)	PTFE [2]	200 °C (392 °F)	5 bar at 20 °C (72.5 psi at 68 °F)
	R¾"	SW/AF 27	52 (2.05)	-	20 (0.8)	PTFE [2]	200 °C (392 °F)	5 bar at 20 °C (72.5 psi at 68 °F)
TA70	For weld-in 30 (1.18)		76 (3)	34 (1.34)	-	Silopren® [2]	180 °C (356 °F)	20 bar at 20 °C (290 psi at 68 °F)

1) SS316 clamping ring: can only be used once. Once released the compression fitting cannot be repositioned on the thermowell. Fully adjustable immersion length on initial installation
2) PTFE/Silopren® clamping ring: can be reused, once released the fitting can be moved up and down the thermowell. Fully adjustable immersion length
3) Depending on insert diameter

Information on the available models is available in the Technical Information "TA Fittings & Sockets" (TI091t/02/en) or on request.

Spare parts

- The thermowell is available as spare part TW12 → 🖹 27
- The RTD insert is available as spare part TPR100 → 🖹 27
- The iTHERM® StrongSens is available as spare part TS111 → 🖹 27
- The TC insert is available as spare part TPC100 → 🖹 27

The inserts are made from mineral insulated cable (MgO) with a sheath of AISI316L/1.4404 (RTD) or Inconel600 (TC).

If spare parts are required, please note the following equation:

Insertion length L = L + 35 mm (1.38 in)

Spare part	Material No.
Seal set M24x1.5, aramid+NBR (10 pieces)	60001329
Silopren coupling for TA70, Ø11 mm (0.43 in), 10 pieces	60011606
Silopren coupling TA70, Ø9 mm (0.35 in), 10 pieces	60011607

Wiring

Wiring diagrams for RTD

Type of sensor connection

Head mounted transmitter TMT18x (single input)

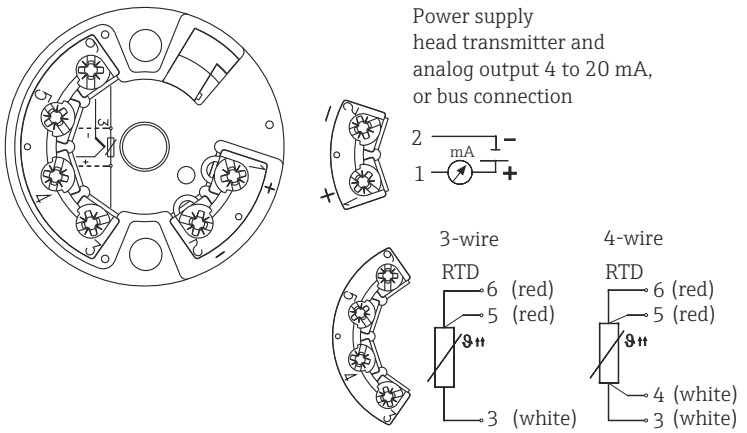

Head mounted transmitter TMT8x (dual input)

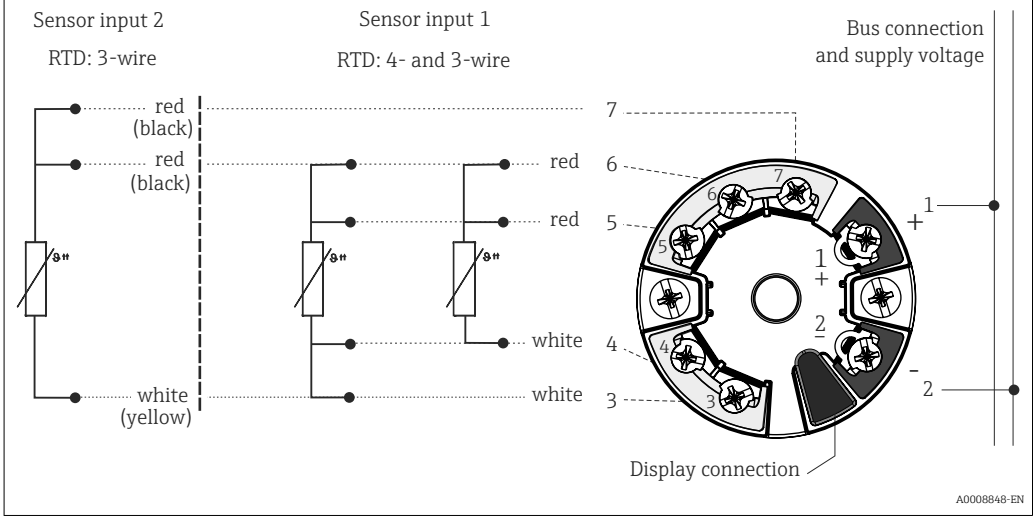

Terminal block mounted

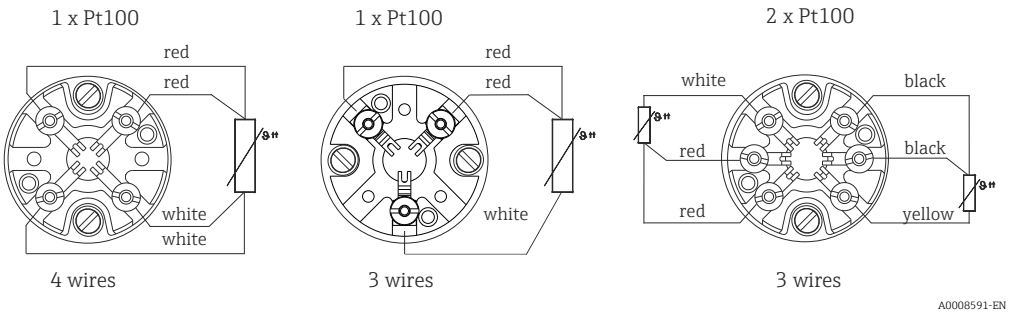

Wiring diagram for TC

Thermocouple wire colors

As per IEC 60584	As per ASTM E230
▪ Type J: black (+), white (-) ▪ Type K: green (+), white (-)	▪ Type J: white (+), red (-) ▪ Type K: yellow (+), red (-)

Head mounted transmitter TMT18x (single input)

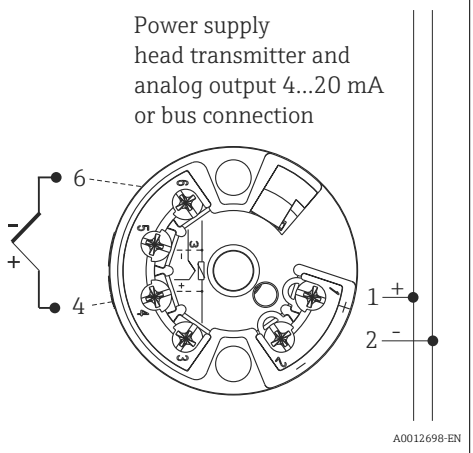

Head mounted transmitter TMT8x (dual input)

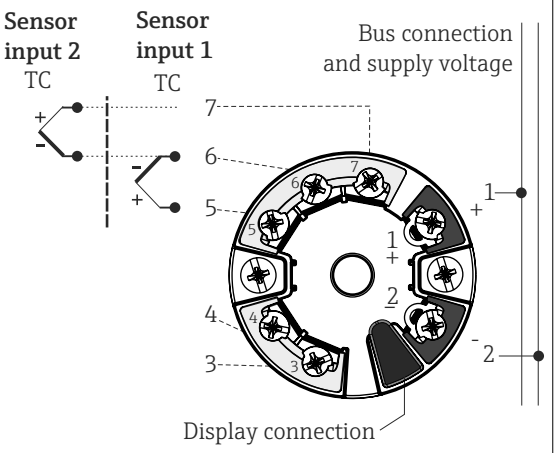

Terminal block mounted

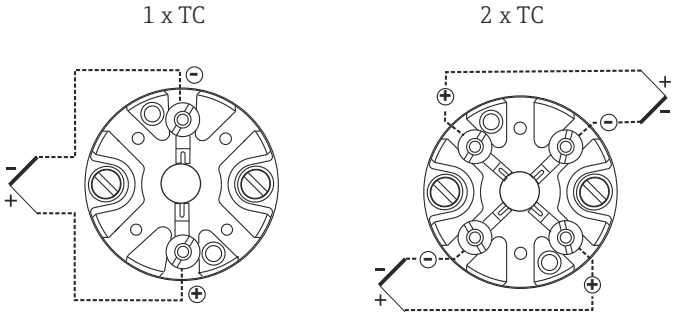

Installation conditions

Orientation

No restrictions.

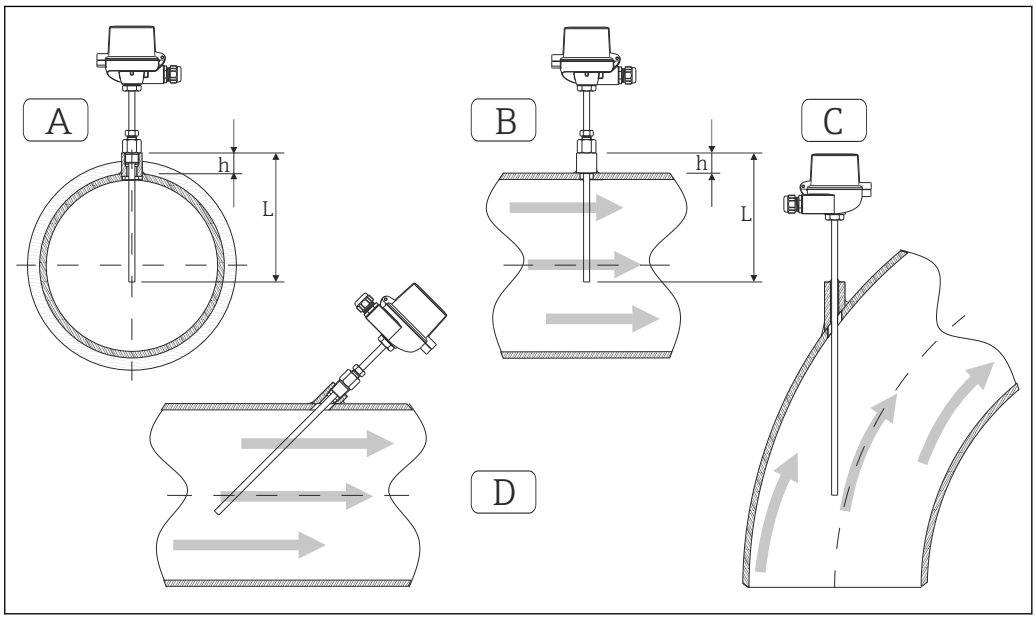

6 *Installation examples*

A - B In pipes with a small cross-section, the sensor tip should reach or extend slightly past the center axis of the pipe (= L).
C - D Slanted orientation.

The immersion length of the thermometer influences the accuracy. If the immersion length is too small, errors in the measurement are caused by heat conduction via the process connection and the container wall. For installation in a pipe, therefore, the recommended installation depth ideally corresponds to half of the pipe diameter. Installation at an angle (see C and D) could be another solution. When determining the immersion length or installation depth all the parameters of the thermometer and of the process to be measured must be taken into account (e.g. flow velocity, process pressure).

- Installation possibilities: Pipes, tanks or other plant components
- Recommended minimum immersion depth: 80 to 100 mm (3.15 to 3.94 in)
  The immersion depth should be at least 8 times the diameter of the thermowell. Example: Thermowell diameter 12 mm (0.47 in) x 8 = 96 mm (3.8 in). A standard immersion depth of 120 mm (4.72 in) is recommended.
- ATEX certification: Observe the installation instructions in the Ex documentation!

Certificates and approvals

CE mark

The product meets the requirements of the harmonized European standards. As such, it complies with the legal specifications of the EC directives. The manufacturer confirms successful testing of the product by affixing to it the CE-mark.

Hazardous area approvals

For further details on the available Ex versions (ATEX, CSA, FM etc.), please contact your nearest Endress+Hauser sales organization. All relevant data for hazardous areas can be found in separate Ex documentation.

Other standards and guidelines

- IEC 60529: Degrees of protection provided by enclosures (IP code)
- IEC/EN 61010-1: Safety requirements for electrical equipment for measurement, control and laboratory use
- IEC 60751: Industrial platinum resistance thermometers

- IEC 60584 and ASTM E230/ANSI MC96.1: Thermocouples
- DIN 43772: Thermowells
- DIN EN 50446: Terminal heads

Material certification

The material certificate 3.1 (according to standard EN 10204) can be requested separately. The "short form" certificate includes a simplified declaration with no enclosures of documents related to the materials used in the design of the individual sensor and guarantees the traceability of the materials through the identification number of the thermometer. The data related to the origin of the materials can subsequently be requested by the client if necessary.

Test on thermowell

Thermowell pressure tests are carried out in accordance with the specifications in DIN 43772. With regard to thermowells with tapered or reduced tips that do not comply with this standard, these are tested using the pressure of corresponding straight thermowells. Sensors for use in hazardous areas are also always subjected to a comparative pressure during the tests. Tests according to other specifications can be carried out on request. The liquid penetration test verifies that there are no cracks in the welded seams of the thermowell.

Test report and calibration

The "Factory calibration" is carried out according to an internal procedure in a laboratory of Endress +Hauser accredited by the European Accreditation Organization (EA) to ISO/IEC 17025. A calibration which is performed according to EA guidelines (SIT/Accredia) or (DKD/DAkkS) may be requested separately. The calibration is performed on the replaceable insert of the thermometer. In the case of thermometers without a replaceable insert, the entire thermometer - from the process connection to the tip of the thermometer - is calibrated.

Ordering information

Detailed ordering information is available for your nearest sales organization www.addresses.endress.com or in the Product Configurator under www.endress.com :

1. Click Corporate
2. Select the country
3. Click Products
4. Select the product using the filters and search field
5. Open the product page

The Configuration button to the right of the product image opens the Product Configurator.

Product Configurator - the tool for individual product configuration

- Up-to-the-minute configuration data
- Depending on the device: Direct input of measuring point-specific information such as measuring range or operating language
- Automatic verification of exclusion criteria
- Automatic creation of the order code and its breakdown in PDF or Excel output format
- Ability to order directly in the Endress+Hauser Online Shop

Accessories

Various accessories, which can be ordered with the device or subsequently from Endress+Hauser, are available for the device. Detailed information on the order code in question is available from your local Endress+Hauser sales center or on the product page of the Endress+Hauser website: www.endress.com.

Communication-specific accessories

Configuration kit TXU10	Configuration kit for PC-programmable transmitter with setup software and interface cable for PC with USB port Order code: TXU10-xx
Commubox FXA195 HART	For intrinsically safe HART communication with FieldCare via the USB interface. For details, see "Technical Information" TI00404F
Commubox FXA291	Connects Endress+Hauser field devices with a CDI interface (= Endress+Hauser Common Data Interface) and the USB port of a computer or laptop. For details, see "Technical Information" TI00405C
HART Loop Converter HMX50	Is used to evaluate and convert dynamic HART process variables to analog current signals or limit values. For details, see "Technical Information" TI00429F and Operating Instructions BA00371F
Wireless HART adapter SWA70	Is used for the wireless connection of field devices. The WirelessHART adapter can be easily integrated into field devices and existing infrastructures, offers data protection and transmission safety and can be operated in parallel with other wireless networks with minimum cabling complexity. For details, see Operating Instructions BA061S
Fieldgate FXA320	Gateway for the remote monitoring of connected 4-20 mA measuring devices via a Web browser. For details, see "Technical Information" TI00025S and Operating Instructions BA00053S
Fieldgate FXA520	Gateway for the remote diagnostics and remote configuration of connected HART measuring devices via a Web browser. For details, see "Technical Information" TI00025S and Operating Instructions BA00051S
Field Xpert SFX100	Compact, flexible and robust industry handheld terminal for remote configuration and for obtaining measured values via the HART current output (4-20 mA). For details, see Operating Instructions BA00060S

Service-specific accessories

Accessories	Description
Applicator	Software for selecting and sizing Endress+Hauser measuring devices: ▪ Calculation of all the necessary data for identifying the optimum measuring device: e.g. pressure loss, accuracy or process connections. ▪ Graphic illustration of the calculation results Administration, documentation and access to all project-related data and parameters over the entire life cycle of a project. Applicator is available: Via the Internet: https://portal.endress.com/webapp/applicator

Configurator	Product Configurator - the tool for individual product configuration ▪ Up-to-the-minute configuration data ▪ Depending on the device: Direct input of measuring point-specific information such as measuring range or operating language ▪ Automatic verification of exclusion criteria ▪ Automatic creation of the order code and its breakdown in PDF or Excel output format ▪ Ability to order directly in the Endress+Hauser Online Shop The Configurator is available on the Endress+Hauser website: www.endress.com -> Click "Corporate" -> Select country -> Click "Products" -> Select the product using the filters and search field -> Open product page -> The "Configure" button to the right of the product image opens the Product Configurator.
DeviceCare SFE100	Configuration tool for devices via fieldbus protocols and Endress+Hauser service protocols. DeviceCare is the tool developed by Endress+Hauser for the configuration of Endress+Hauser devices. All smart devices in a plant can be configured via a point-to-point or point-to-bus connection. The user-friendly menus enable transparent and intuitive access to the field devices. For details, see Operating Instructions BA00027S
FieldCare SFE500	FDT-based plant asset management tool from Endress+Hauser. It can configure all smart field units in your system and helps you manage them. By using the status information, it is also a simple but effective way of checking their status and condition. For details, see Operating Instructions BA00027S and BA00065S
W@M	Life cycle management for your plant W@M supports with a wide range of software applications over the entire process: from planning and procurement, to the installation, commissioning and operation of the measuring devices. All the relevant device information, such as the device status, spare parts and device-specific documentation, is available for every device over the entire life cycle. The application already contains the data of your Endress+Hauser device. Endress +Hauser also takes care of maintaining and updating the data records. W@M is available: Via the Internet: www.endress.com/lifecyclemanagement

System components

Accessories	Description
Field display unit RIA16	The display unit records the analog measuring signal from the head transmitter and shows this on the display. The LC display shows the current measured value in digital form and as a bar graph indicating a limit value violation. The display unit is looped into the 4 to 20 mA circuit and gets the required energy from there. For details, see the "Technical Information" document TI00144R/09/en
RN221N	Active barrier with power supply for safe separation of 4-20 mA standard signal circuits. Offers bidirectional HART transmission. For details, see "Technical Information" TI00073R and Operating Instructions BA00202R
RNS221	Supply unit for powering two 2-wire measuring devices solely in the non-Ex area. Bidirectional communication is possible via the HART communication jacks. For details, see "Technical Information" TI00081R and Brief Operating Instructions KA00110R

Supplementary documentation

Technical Information:

- iTEMP® temperature head transmitter:
  - TMT180, PC-programmable, single-channel, Pt100 (TI088R/09/en)
  - PCP TMT181, PC-programmable, single-channel, RTD, TC, Ω, mV (TI00070R/09/en)
  - HART® TMT182, single-channel, RTD, TC, Ω, mV (TI078R/09/en)
  - HART® TMT82, two-channel, RTD, TC, Ω, mV (TI01010T/09/en)
  - PROFIBUS® PA TMT84, two-channel, RTD, TC, Ω, mV (TI00138R/09/en)
  - FOUNDATION Fieldbus™ TMT85, two-channel, RTD, TC, Ω, mV (TI00134R/09/en)
- Inserts:
  - Omniset TPR100 resistance thermometer insert (TI268t/02/en)
  - Thermocouple insert Omniset TPC100 (TI278t/02/en)
  - iTHERM® TS111 insert for installing in thermometer (TI01014T/09/en)
- Thermowell for Omnigrad M TW12 temperature sensors (TI263T/02/en)
- Application example:
  - RN221N Active barrier, for powering 2-wire transmitters (TI073R/09/en)
  - RIA16 Field display unit, loop-powered (TI00144R/09/en)

Supplementary documentation ATEX/IECEx:

- Omnigrad TRxx, TCxx, TSTxxx, TxCxxx; Omniset TPR100, TET10x, TPC100, TEC10x, iTHERM® TS111 ATEX II 3GD Ex nA (XA00044R/09/a3)
- RTD/TC thermometer Omnigrad TRxx, TCxx, TxCxxx, ATEX II 1GD or II 1/2GD Ex ia IIC T6...T1 (XA00072R/09/a3)
- Omniset inserts TPR100, TPC100, ATEX II 1G (XA087R/09/a3)
- iTHERM® TS111, TM211 Omnigrad TST310, TSC310 Omniset TPR100, TPC100 IECEx Ex ia IIC T6...T1 (XA00100R/09/a3)

www.addresses.endress.com

Endress+Hauser

People for Process Automation