Level Pressure Flow Temperature Liquid Analysis Registration Systems Components Services Solutions

Operating Instructions

Levelflex M FMP45

Guided Level-Radar

HART COMMUNICATION PROTOCOL

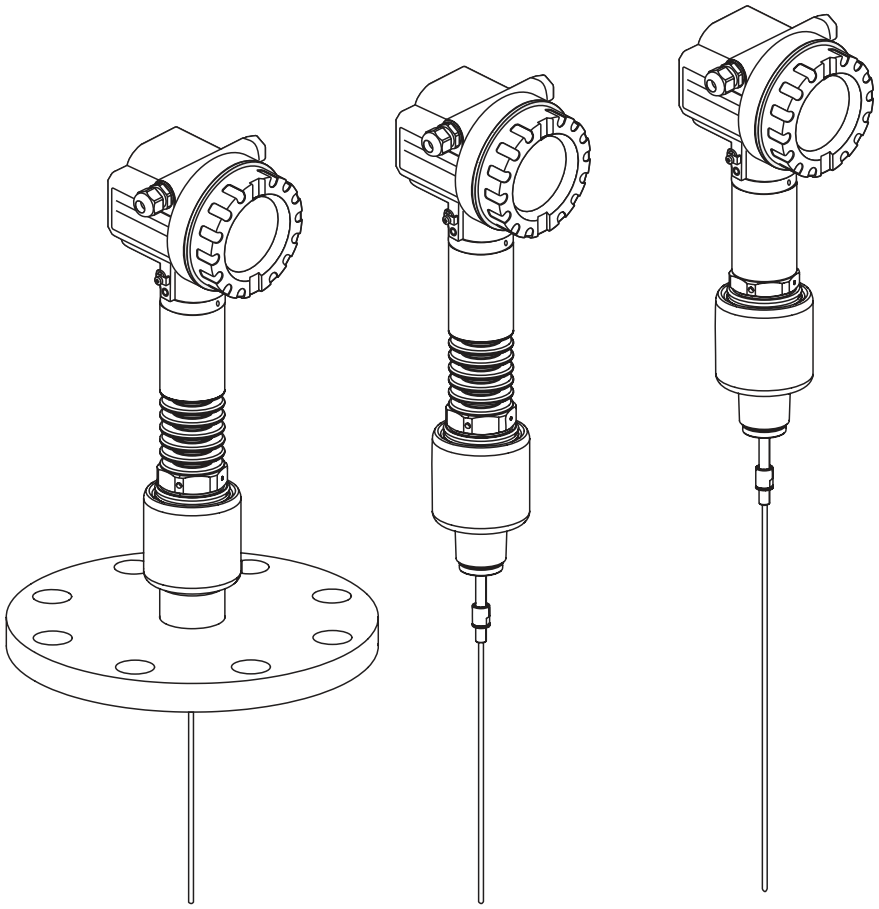

BA00279F/00/EN/15.11
71154965

Valid as of software version:
01.04.zz

Endress+Hauser
People for Process Automation

Brief Operating Instructions

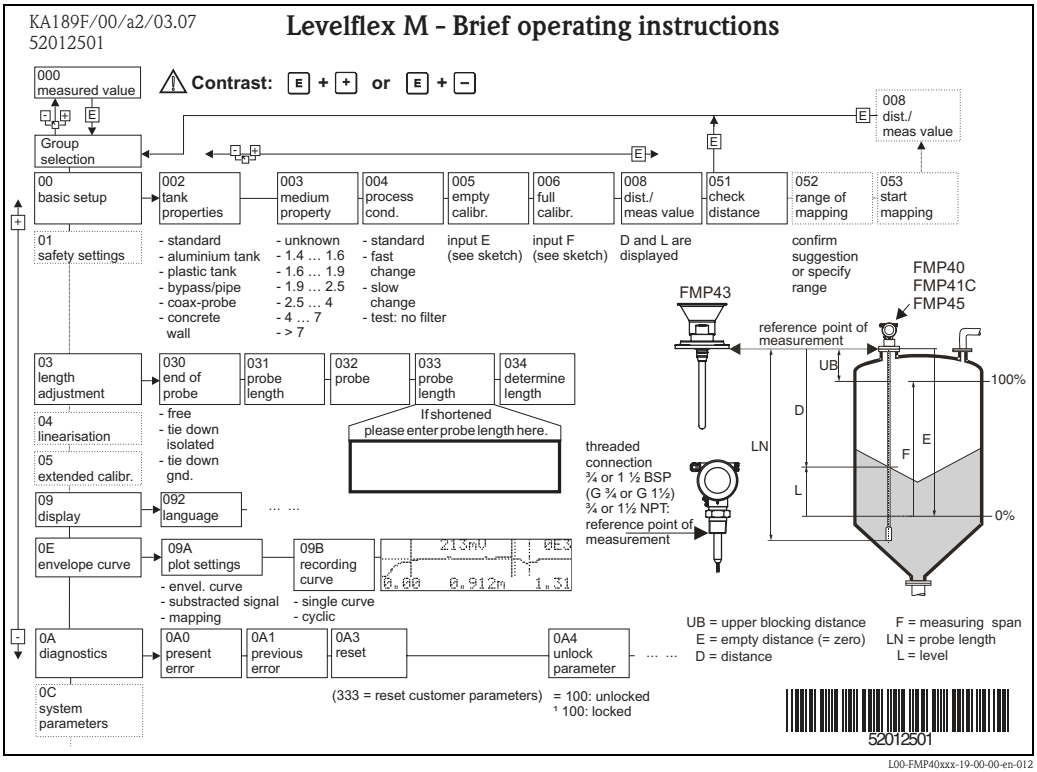

Note!
This Operating Instructions explains how to install and commission the level transmitter.
All functions that are required for a typical measuring task are taken into account here.
In addition, the Levelflex M provides many other functions for optimizing the measuring point and conventing measured values. These functions are not included in these Operating Instruction.

An **overview of all device functions** can be found on Page 86.

The operating manual BA00245F/00/EN "Description of Instrument Functions" provides an **extensive description of all device functions** which can be found on the enclosed CD-ROM.

The Operating Instructions can also be found on our homepage: www.endress.com

Table of contents

1 Safety instructions 4

1.1 Designated use 4
1.2 Installation, commissioning and operation 4
1.3 Operational safety and process safety 4
1.4 Notes on safety conventions and icons 5

2 Identification 6

2.1 Device designation 6
2.2 Scope of delivery 9
2.3 Certificates and approvals 9
2.4 Registered trademarks 9

3 Installation 10

3.1 Quick installation guide 10
3.2 Incoming acceptance, transport, storage 10
3.3 Installation conditions 11
3.4 Installation 13
3.5 Post-installation check 23

4 Wiring 24

4.1 Quick wiring guide 24
4.2 Connecting the measuring unit 26
4.3 Recommended connection 29
4.4 Degree of protection 29
4.5 Post-connection check 29

5 Operation 30

5.1 Quick operation guide 30
5.2 Display and operating elements 32
5.3 Local operation 34
5.4 Display and acknowledging error messages 37
5.5 HART communication 38

6 Commissioning. 40

6.1 Function check 40
6.2 Switching on the measuring device 40
6.3 Basic Setup 41
6.4 Basic Setup with the VU331 43
6.5 Blocking distance 52
6.6 Envelope curve with VU331 54
6.7 Function "envelope curve display" (0E3) 55
6.8 Basic setup with the Endress+Hauser operating program 58

7 Maintenance. 64

7.1 Exterior cleaning 64
7.2 Repairs 64
7.3 Repairs to Ex-approved devices 64
7.4 Replacement 64

8 Accessories 65

8.1 Weather protection cover 65
8.2 Mounting-kit isolated 65
8.3 Remote display and operation FHX40 66
8.4 Centering disks 67
8.5 Commubox FXA195 HART 68
8.6 Commubox FXA291 68
8.7 ToF Adapter FXA291 68
8.8 Special process connection 69

9 Trouble-shooting 70

9.1 Trouble-shooting instructions 70
9.2 System error messages 71
9.3 Application errors 73
9.4 Spare Parts 75
9.5 Return 76
9.6 Disposal 76
9.7 Software history 76
9.8 Contact addresses of Endress+Hauser 76

10 Technical data 77

10.1 Additional technical data 77

11 Appendix 86

11.1 Operating menu HART (Display modul) 86
11.2 Patents 88

Index 89

1 Safety instructions

1.1 Designated use

The Levelflex M is a compact level transmitter for the continuous measurement of solids and liquids, measuring prinziple: Guided Level Radar / TDR: **T**ime **D**omain **R**eflectometry.

1.2 Installation, commissioning and operation

The Levelflex M has been designed to operate safely in accordance with current technical, safety and EU standards. If installed incorrectly or used for applications for which it is not intended, however, it is possible that application-related dangers may arise, e.g. product overflow due to incorrect installation or calibration. For this reason, the device must be installed, connected, operated and maintained according to the instructions in this manual: personnel must be authorised and suitably qualified. The manual must have been read and understood, and the instructions followed. Modifications and repairs to the device are permissible only when they are expressly approved in the manual.

1.3 Operational safety and process safety

Alternative monitoring measures must be taken to ensure operational safety and process safety during configuration, testing and maintenance word on the device.

Hazardous areas

Measuring systems for use in hazardous environments are accompanied by separate "Ex documentation", which is an *integral part* of this Operating Manual. Strict compliance with the installation instructions and ratings as stated in this Additional documentation is mandatory.

- Ensure that all personnel are suitably qualified.
- Observe the specifications in the certificate as well as national and local regulations.

1.4 Notes on safety conventions and icons

In order to highlight safety-relevant or alternative operating procedures in the manual, the following conventions have been used, each indicated by a corresponding symbol in the margin.

Safety conventions	
	**Warning!** A warning highlights actions or procedures which, if not performed correctly, will lead to personal injury, a safety hazard or destruction of the device.
	**Caution!** Caution highlights actions or procedures which, if not performed correctly, may lead to personal injury or incorrect functioning of the device.
	**Note!** A note highlights actions or procedures which, if not performed correctly, may indirectly affect operation or may lead to an device response which is not planned.
Explosion protection	
	**Device certified for use in explosion hazardous area** If the device has this symbol embossed on its name plate it can be installed in an explosion hazardous area.
	**Explosion hazardous area** Symbol used in drawings to indicate explosion hazardous areas. Devices located in and wiring entering areas with the designation “explosion hazardous areas” must conform with the stated type of protection.
	**Safe area (non-explosion hazardous area)** Symbol used in drawings to indicate, if necessary, non-explosion hazardous areas. Devices located in safe areas still require a certificate if their outputs run into explosion hazardous areas.
Electrical symbols	
	**Direct voltage** A terminal to which or from which a direct current or voltage may be applied or supplied.
	Alternating voltage A terminal to which or from which an alternating (sine-wave) current or voltage may be applied or supplied.
	**Grounded terminal** A grounded terminal, which as far as the operator is concerned, is already grounded by means of an earth grounding system.
	**Protective grounding (earth) terminal** A terminal which must be connected to earth ground prior to making any other connection to the equipment.
	**Equipotential connection (earth bonding)** A connection made to the plant grounding system which may be of type e.g. neutral star or equipotential line according to national or company practice.
	**Temperature resistance of the connection cables** States, that the connection cables must be resistant to a temperature of at least 85 °C.

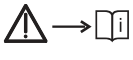	**Safety instruction** For safety instructions refer to the manual for the appropriate device version.

2 Identification

2.1 Device designation

2.1.1 Nameplate

The following technical data are given on the device nameplate:

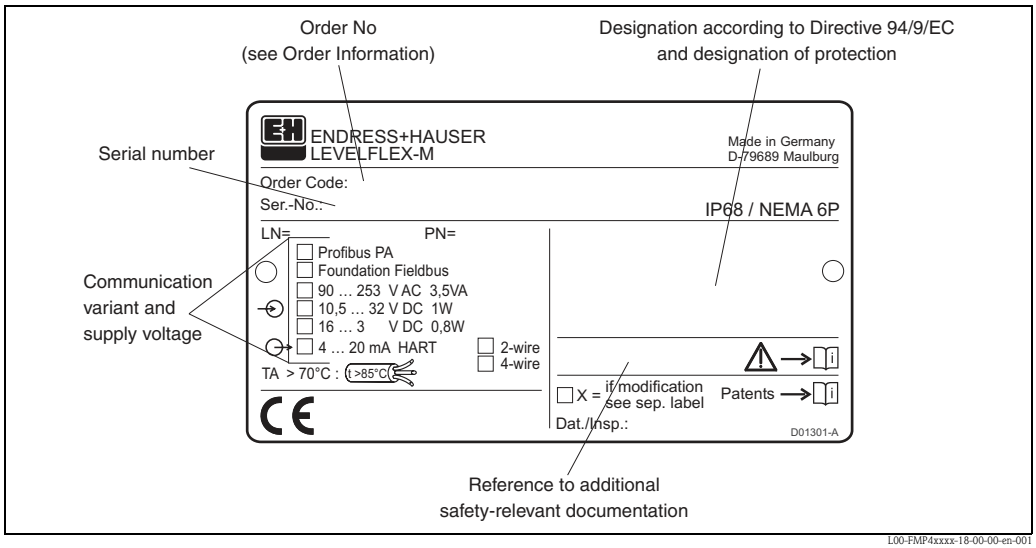

Information on the nameplate of the Levelflex M FMP45

2.1.2 Ordering structure

This overview does not mark options which are mutually exclusive.

10	Approval:	
	A	Non-hazardous area
	F	Non-hazardous area, WHG
	1	ATEX II 1/2G EEx ia IIC T6/IECEx Zone 0/1
	2	ATEX II 1/2D / IEC Ex td A20/21, Alu blind cover
	3	ATEX II 1/2G EEx emb (ia) IIC T6/IECEx Zone 0/1
	4	ATEX II 1/3D / IEC Ex td A20/22
	5	ATEX II 1/2G EEx ia IIC T6, ATEX II 1/3D
	6	ATEX II 1/2G EEx ia IIC T6, WHG
	7	ATEX II 1/2G EEx d (ia) IIC T6 / IEC Ex d(ia) IIC T6
	8	ATEX II 1/2G EEx ia IIC T6, ATEX II 1/3D, WHG
	G	ATEX II 3G EEx nA II T6
	H	ATEX II 3G Ex ic IIC T6 Gc
	C	NEPSI Ex emb (ia) IIC T6
	I	NEPSI Ex ia IIC T6
	J	NEPSI Ex d (ia) IIC T6
	Q	NEPSI DIP (in preparation)
	R	NEPSI Ex nA II T6
	M	FM DIP Cl.II Div.1 Gr. E-G N.I.
	S	FM IS Cl.I,II,III Div.1 Gr. A-G N.I., zone 0, 1, 2
	T	FM XP Cl.I,II,III Div.1 Gr. A-G, zone 1, 2
	N	CSA General Purpose
	P	CSA DIP Cl.II Div.1 Gr. G + coal dust, N.I.
	U	CSA IS Cl.I,II,III Div.1 Gr. A-D,G + coal dust, N.I., zone 0, 1, 2
	V	CSA XP Cl.I,II,III Div.1 Gr. A-D,G + coal dust, N.I., zone 1, 2
	K	TIIS Ex d (ia) IIC T1
	L	TIIS Ex d (ia) IIC T2
	Y	Special version, TSP-No. to be spec.

20		Process temperature:
	A	-200...+280 °C / -328...+5360 °F (XT); saturated steam max. +200 °C
	B	-200...+400 °C / -328...+7520 °F (HT)
	Y	Special version, TSP-No. to be spec.

30		Probe:
	A	..... mm, rope 4mm, 316
	C	..... inch, rope 1/6", 316
	K	..... mm, rod 16 mm, 316L
	L	..... mm, coax, 316L
	M	..... inch, rod 16 mm, 316L
	N	..... inch, coax, 316L
	S	..... mm, rod 16 mm, 316L, 500 mm divisible
	T	..... mm, rod 16 mm, 316L, 1000 mm divisible
	U	..... inch, rod 16 mm, 316L, 20 in divisible
	V	..... inch, rod 16 mm, 316L, 40 in divisible
	Y	Special version, TSP-No. to be spec.

40		Process connection:
	AFJ	2" 150lbs RF, 316/316L flange ANSI B16.5
	AGJ	3" 150lbs RF, 316/316L flange ANSI B16.5
	AHJ	4" 150lbs RF, 316/316L flange ANSI B16.5
	ARJ	2" 300/600lbs RF, 316/316L flange ANSI B16.5
	ASJ	3" 300/600lbs RF, 316/316L flange ANSI B16.5
	ATJ	4" 300lbs RF, 316/316L flange ANSI B16.5
	A1J	2" 1500lbs RF, 316/316L flange ANSI B16.5
	A2J	3" 1500lbs RF, 316/316L flange ANSI B16.5
	A3J	4" 600lbs RF, 316/316L flange ANSI B16.5
	A4J	4" 900lbs RF, 316/316L flange ANSI B16.5
	A5J	4" 1500lbs RF, 316/316L flange ANSI B16.5
	CHJ	DN100 PN10/16 B1, 316L flange EN1092-1 (DIN2527 C)
	CRJ	DN50 PN10-40 B1, 316L flange EN1092-1 (DIN2527 C)
	CSJ	DN80 PN10-40 B1, 316L flange EN1092-1 (DIN2527 C)
	CTJ	DN100 PN25/40 B1, 316L flange EN1092-1 (DIN2527 C)
	C1J	DN50 PN63 B2, 316L flange EN1092-1 (DIN2527 E)
	C2J	DN50 PN100 B2, 316L flange EN1092-1 (DIN2527 E)
	C3J	DN80 PN63 B2, 316L flange EN1092-1 (DIN2527 E)
	C4J	DN80 PN100 B2, 316L flange EN1092-1 (DIN2527 E)
	C5J	DN100 PN63 B2, 316L flange EN1092-1 (DIN2527 E)
	C6J	DN100 PN100 B2, 316L flange EN1092-1 (DIN2527 E)
	KFJ	10K 50A RF, 316L flange JIS B2220
	KGJ	10K 80A RF, 316L flange JIS B2220
	KHJ	10K 100A RF, 316L flange JIS B2220
	K3J	63K 50A RF, 316L flange JIS B2220
	K4J	63K 80A RF, 316L flange JIS B2220
	K5J	63K 100A RF, 316L flange JIS B2220
	GGJ	Thread ISO228 G1-1/2, 200bar, 316L
	GJJ	Thread ISO228 G1-1/2, 400bar, 316L
	RGJ	Thread ANSI NPT1-1/2, 200bar, 316L
	RJJ	Thread ANSI NPT1-1/2, 400bar, 316L
	YY9	Special version, TSP-No. to be spec.

50		Power supply; output:
	B	2-wire; 4-20mA SIL HART
	D	2-wire; PROFIBUS PA
	F	2-wire; FOUNDATION Fieldbus
	G	4-wire 90-250VAC; 4-20mA SIL HART
	H	4-wire 10.5-32VDC; 4-20mA SIL HART
	K	2-wire; 4-20mA HART, interface measurement
	Y	Special version, TSP-No. to be spec.

60		Operation:
	1	W/o display, via communication
	2	4-line display VU331, envelope curve display on site
	3	Prepared for FHX40, remote display (accessory)
	9	Special version, TSP-No. to be spec.

70	**Type of probe:**	
	B	Compact, centering disc d=45 mm, 316L, pipe diameter DN50/2"
	C	Compact, centering disc d=75 mm, 316L, pipe diameter DN80/3" + DN100/4"
	F	Remote, cable 3m, top, center d=45 mm, centering disk d=45 mm, 316L, pipe diameter DN50/2"
	G	Remote, cable 3m, top, center d= 75 mm, centering disk d=75 mm, 316L, pipe diameter DN80/3" + DN100/4"
	H	Remote, cable 3m, side, center d=45 mm, centering disk d=45 mm, 316L, pipe diamter DN50/2"
	I	Remote, cable 3m, side, center d=75 mm, centering disc d=75 mm, 316L, pipe diamter DN80/3" + DN100/4"
	1	Compact, basic version
	3	Remote, cable 3m, top entry
	4	Remote, cable 3m, side entry
	9	Special version, TSP-No. to be spec.
80	**Housing:**	
	A	F12 Alu, coated IP68 NEMA6P
	B	F23 316L IP68 NEMA6P
	C	T12 Alu, coated IP68 NEMA6P, separate conn. compartment
	D	T12 Alu, coated IP68 NEMA6P + OVP[1], separate conn. compartment
	Y	Special version, TSP-No. to be spec.
90	**Cable Entry:**	
	2	Gland M20 (EEx d > thread M20)
	3	Thread G1/2
	4	Thread NPT1/2
	5	Plug M12
	6	Plug 7/8"
	9	Special version, TSP-No. to be spec.
100	**Additional options:**	
	A	Basic version
	B	EN10204-3.1 material, wetted parts, (316L wetted parts for rod/coax) inspection certificate
	C	EN10204-3.1 material, wetted parts, (316L pressurized for rope version) inspection certificate
	D	Steam boiler app.+EN10204-3.1 material, Steam boiler approval EN12952-11/12953-9, EN10204-3.1 material, wetted parts (316L wetted parts for rod/coax) inspection certificate
	H	5-point linearity protocol, see additional spec.
	J	5-point, 3.1, NACE, 5-point linearity protocol, see additional spec., EN10204-3.1 material, NACE MR0175 (316L wetted parts) inspection certificate
	N	EN10204-3.1 material, NACE MR0175, (316L wetted parts) inspection certificate
	U	Steam boiler app. 300 mm / 11" gas phase, Steam boiler approval EN12952-11/12953-9, Gas phase comp. 300 mm / 11" reference rod, EN10204-3.1 material, NACE MR0175 (316L wetted parts) inspection certificate
	V	Steam boiler app. 550 mm / 21" gas phase, Steam boiler approval EN12952-11/12953-9, Gas phase comp. 550 mm / 21" reference rod, EN10204-3.1 material, NACE MR0175 (316L wetted parts) inspection certificate
	Y	Special version, TSP-No. to be spec.
995	**Marking:**	
	1	Tagging (TAG), see additional spec.
	2	Bus address, see additional spec.
FMP45-		Complete product designation

[1] OVP = overvoltage protection

2.2 Scope of delivery

Caution!
It is essential to follow the instructions concerning the unpacking, transport and storage of measuring devices given in the chapter "Incoming acceptance, transport, storage", Page 10!

The scope of delivery consists of:
- Assembled device
- Accessories (→ 65)
- Endress+Hauser operating program on the enclosed CD-ROM
- Brief operating instructions KA00189F/00/A2 (basic setup/troubleshooting), housed in the device
- Brief operating instructions KA01044F/00/EN for quick commissioning
- Approval documentation: if this is not included in the operating manual
- CD-ROM with further documentation, e.g.
  – Technical Information
  – Operating Instructions
  – Description of Instrument Functions

2.3 Certificates and approvals

CE mark, declaration of conformity
The device is designed to meet state-of-the-art safety requirements, has been tested and left the factory in a condition in which it is safe to operate. The device complies with the applicable standards and regulations as listed in the EC declaration of conformity and thus complies with the statutory requirements of the EG directives. Endress+Hauser confirms the successful testing of the device by affixing to it the CE mark.

2.4 Registered trademarks

KALREZ®, VITON®, TEFLON®
Registered trademark of the company, E.I. Du Pont de Nemours & Co., Wilmington, USA

TRI-CLAMP®
Registered trademark of the company, Ladish & Co., Inc., Kenosha, USA

HART®
Registered trademark of HART Communication Foundation, Austin, USA

PulseMaster®
Registered trademark of the company Endress+Hauser GmbH+Co. KG, Maulburg, Germany

3 Installation

3.1 Quick installation guide

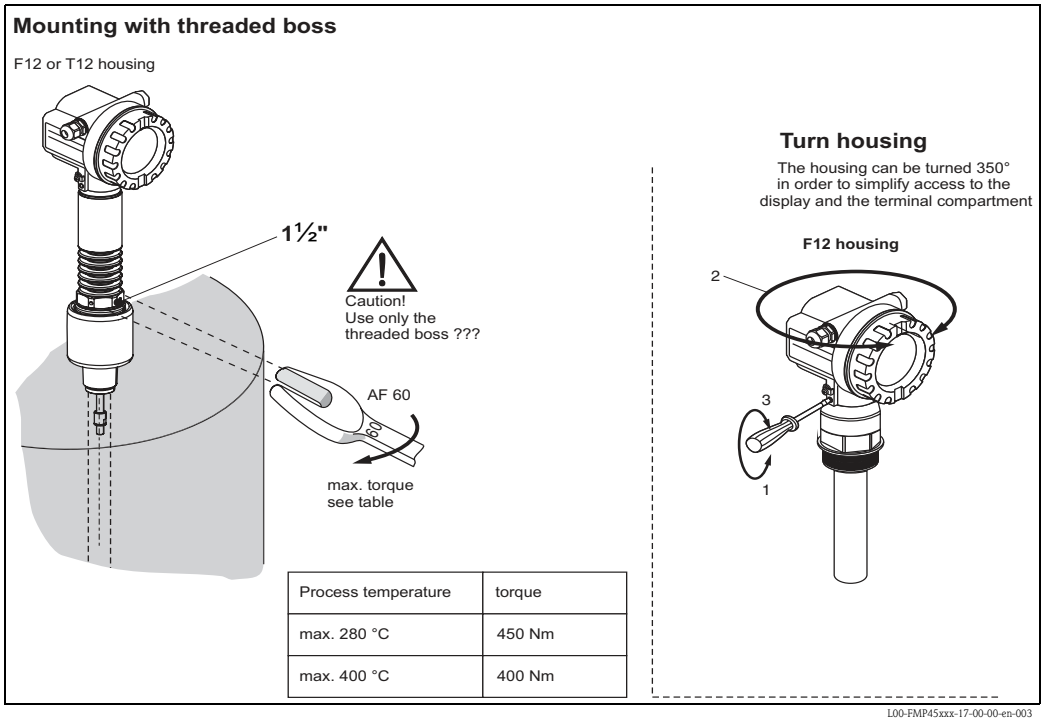

3.2 Incoming acceptance, transport, storage

3.2.1 Incoming acceptance

Check the packing and contents for any signs of damage.
Check the shipment, make sure nothing is missing and that the scope of supply matches your order.

3.2.2 Transport

Caution!
Follow the safety instructions and transport conditions for devices of more than 18 kg.
Do not lift the measuring device by its probe rod in order to transport it.

3.2.3 Storage

Pack the measuring device so that is protected against impacts for storage and transport.
The original packing material provides the optimum protection for this.
The permissible storage temperature is -40 °C to +80 °C.

3.3 Installation conditions

3.3.1 Dimensions

Housing dimensions

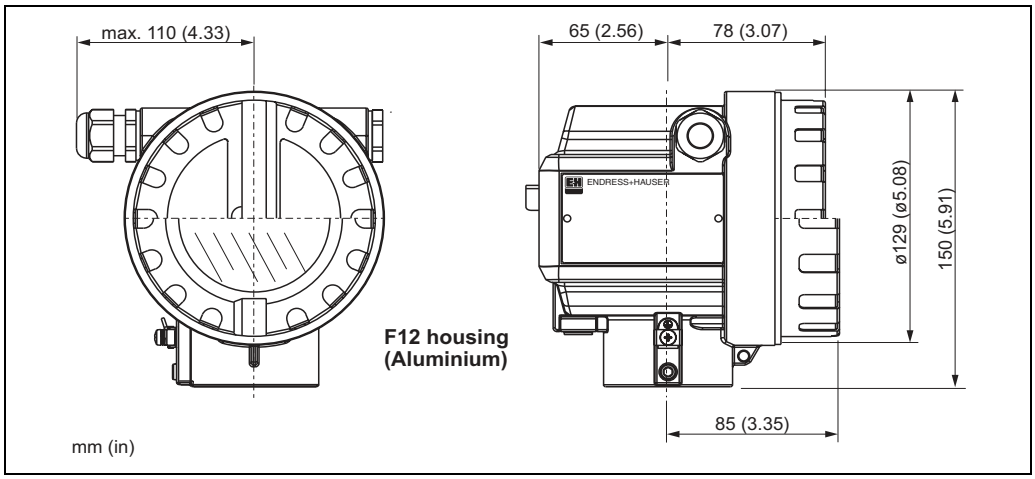

L00-F12xxxx-06-00-00-en-001

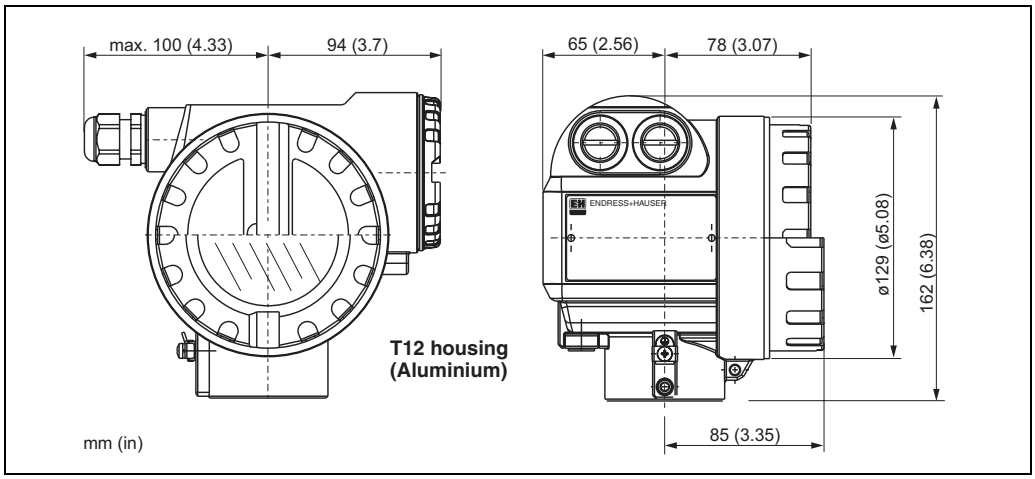

L00-T12xxxx-06-00-00-en-001

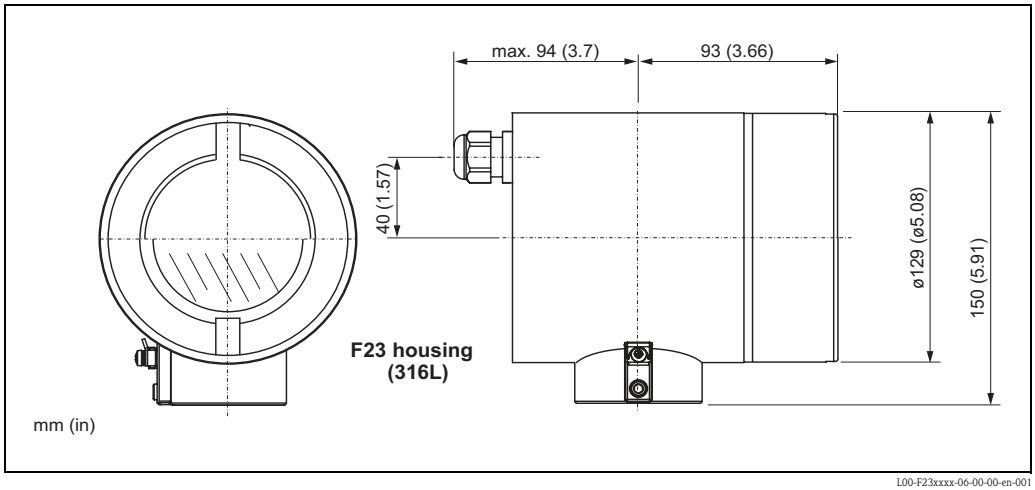

L00-F23xxxx-06-00-00-en-001

Process connection, type of probe

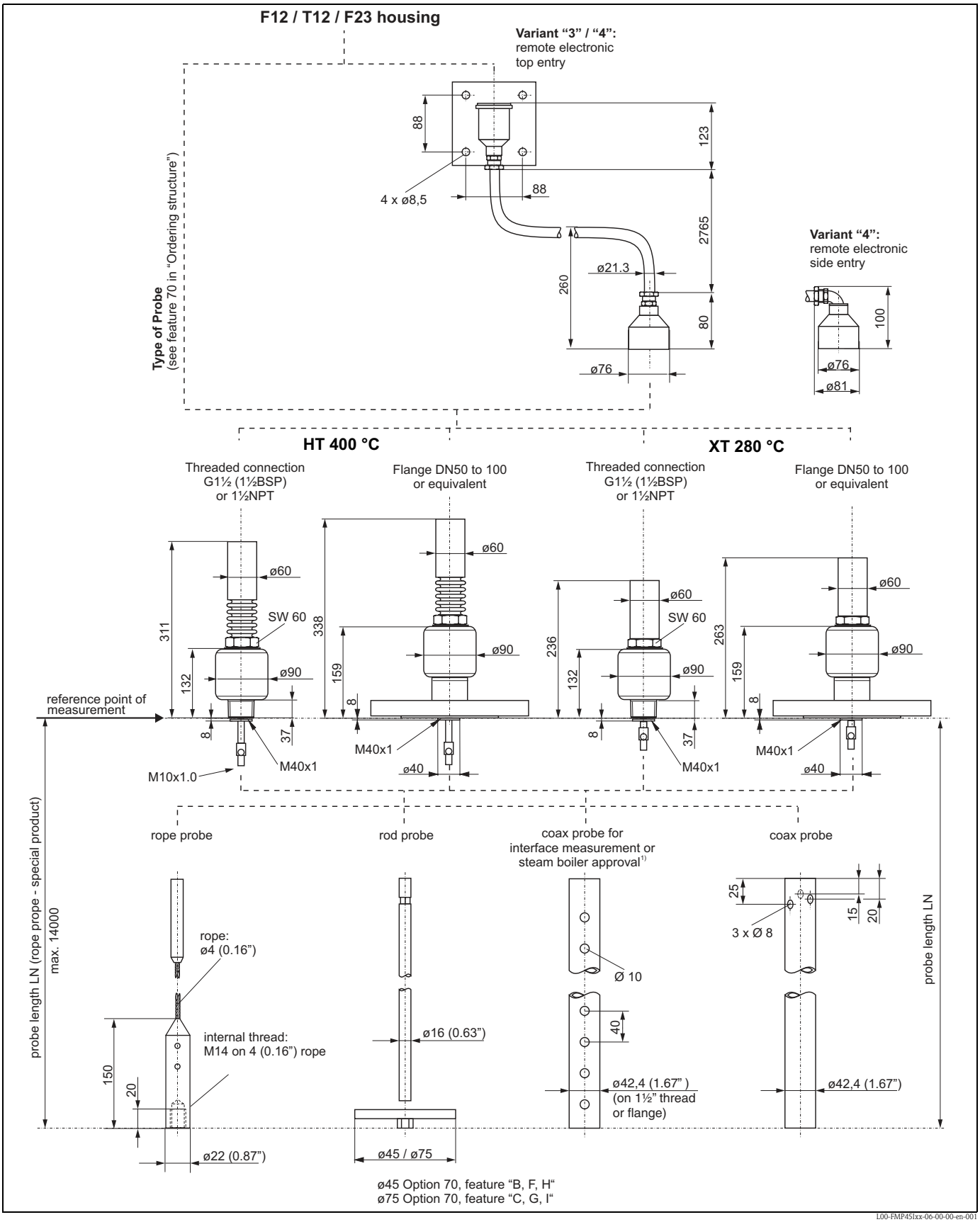

1) See SD00288F/00/EN "Steam boiler approval".

3.4 Installation

3.4.1 Mounting kit

In addition to the tool needed for flange mounting, you will require the following tool:
- For the mounting of threaded connection: 60 mm Open-end spanner for 1½".
- 4 mm Allen wrench for turning the housing.

3.4.2 Shortening probes

Note!
When shortening the probe: Enter the new length of probe into the Quick Setup which can be found in the electronics housing under the display module.

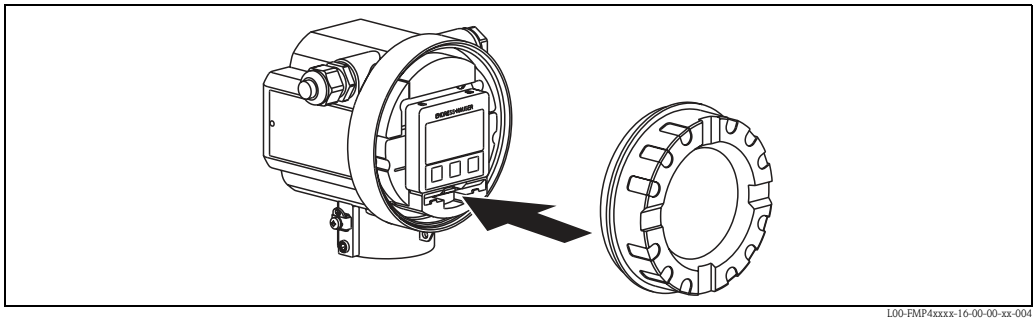

L00-FMP4xxxx-16-00-00-xx-004

Rod probe

The shortening is necessary if the distance to the container floor or outlet cone is less than 50 mm. The rods of a rod probe are shortened by sawing or separating at the bottom end.

Rope probes

The shortening is necessary if the distance to the container floor or outlet cone is less than 150 mm.
- Remove ballast weight:
  – The weight is fixed to the probe rope with 3 Allen setscrews (M4, Allen key AF3). The screws are secured with Loctite. This may first have to be made plastic with a hot air apparatus.
- Remove released rope from the weight
- Measure off new rope length
- Wrap adhesive tape around the rope at the point to be shortened to prevent it from fanning out.
- Saw off the rope at a right angle or cut it off with a bolt cutter.
- Insert the rope completely into the weight,
  – 4 mm rope: 60 mm deep,
  – 6 mm rope: 80 mm deep

The weight is then refixed to the rope:
- Reapply screw locking fluid (we recommend Loctite type 243) to the setscrews and screw into place.
- When doing so, observe the following torques:
  – 4 mm rope: 5 Nm
  – 6 mm rope: 15 Nm

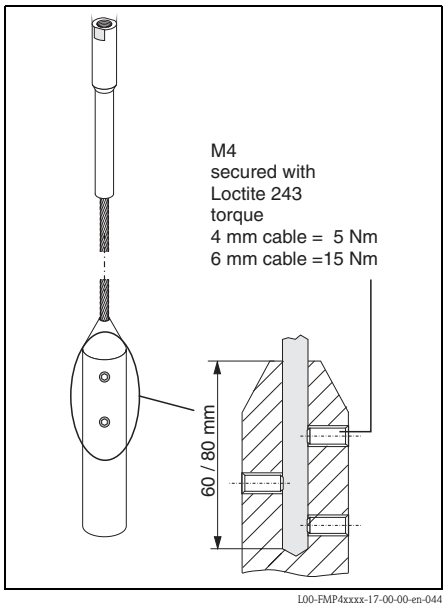

L00-FMP4xxxx-17-00-00-en-044

Coax probes

The shortening is necessary if the distance to the container floor or outlet cone is less than 10 mm. Coax probes can be shortened max. 80 mm from the end. They have centering units inside which fix the rod centrally in the pipe. The centerings are held with borders on the rod. Shortening is possible up to approx. 10 mm below the centering.

3.4.3 Mounting probes in an empty silo

Caution!
If there is a risk of electrostatic discharge from the product, then both processconnection and rope must be earthed before the probe is lowered into the silo.

Levelflex can be screwed into a threaded socket or flange. Proceed as follows:

Insert probe

- Uncoil rope and lower it slowly and carefully into the silo.
- Do not kink the rope
- Avoid any backlash, since this mightdamage the probe or the silo fittings.

Note!
For flange mounting: if a seal is used, be sure to use unpainted metal bolts toensure good electrical contact betweenprobe flange and process flange.

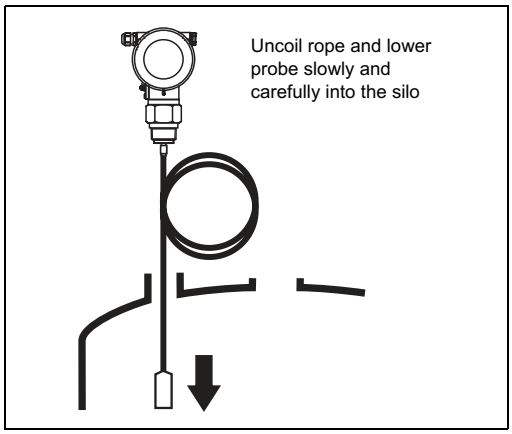

L00-FMP4xxxx-17-00-00-en-056

Screw down

- Screw the Levelflex into the process connection or to flange.
- Turn with the hexagonal nut only: torque 10 to 20 Nm.
- Levelflex functions in metal, concrete and plastic silos. When installing inmetal silos, take care to ensure goodmetallic contact between the processconnection and silo.

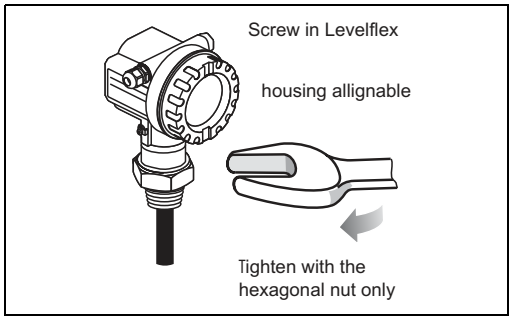

L00-FMP4xxxx-17-00-00-en-057

3.4.4 Mounting rope probes in a partially full silo

It is not always possible to empty a silo which is already in operation. Mounting in a partially filled silo is possible if the following conditions are met:
- Mount when the silo is as empty as if possible. A minimum of 2/3 of the silo must be empty.

After mounting, map must be made should the installation conditions require it.

Caution!
If there is a risk of electrostatic discharge from the product, the housing must be earthed before the probe is lowered into the silo.

Screw down
- If appropriate, screw the Levelflex into the threaded flange.
- Turn with the hexagonal nut only: torque 10 to 20 Nm
- For flange mounting: if a seal is used, be sure to use unpainted metal bolts to ensure good electrical contact between probe flange and process flange.
- When installing in metal silos, take care to ensure good metallic contact between the process connection and silo.

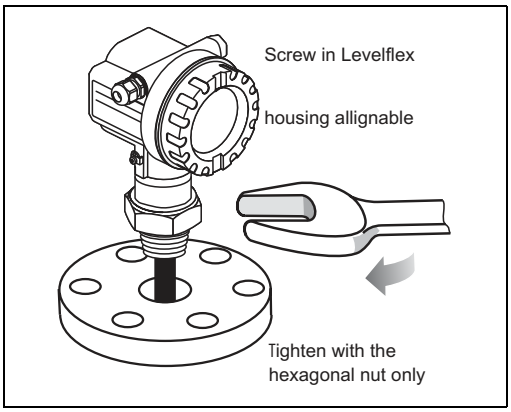

L00-FMP4xxxxx-17-00-00-en-058

Insert probe
- Uncoil rope and lower it slowly and carefully into the silo.
- Avoid tangles.
- Avoid any backlash, since this might damage the silo fittings.
- If possible, make a visual check to see that the rope has not tangled or is lying such that it can knot when the level falls. This is particularly important if a flange was not used. Re-insert the probe if necessary.
- Screw the flange to the counterflange on the nozzle.

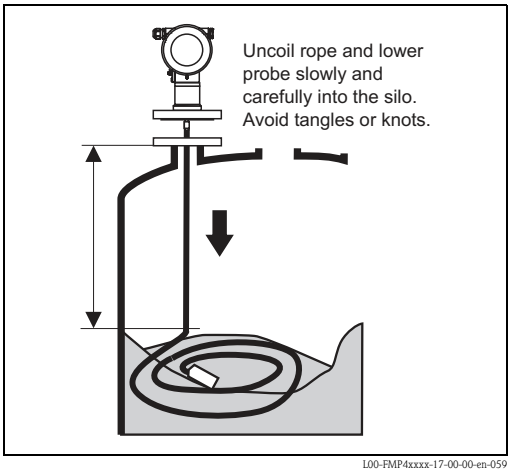

L00-FMP4xxxxx-17-00-00-en-059

Note!
Before full accuracy is obtained the probe rope must hang fully extended.

3.4.5 Mounting the probe rod

See KA00228F/00/B8.

3.4.6 General instructions

Normally use rod probes. Rope probes are used in liquids for measuring ranges > 4 m and with restricted ceiling clearance which does not allow the installation of rigid probes.

Coax probes are not influenced by the installation conditions. They may also be operated
- in the filling curtain
- in arbitrary proximity to internal fittings
- at viscositys up to 500 cSt.

Mounting location
- Do not mount rod or rope probes in the filling curtain (2).
- Mount rod and rope probes away from the wall (B) at such a distance that, in the event of build-up on the wall, there is still a minimum distance of 100 mm between the probe and the build-up.
- Mount rod and rope probes as far away as possible from installed fittings. "Mapping " must be carried out during commissioning in the event of distances < 300 mm.
- Minimum distance of probe end to the container floor (C):
  – Rope probe: 150 mm
  – Rod probe: 50 mm
  – Coax probe: 10 mm
- When installing outdoors, it is recommended that you use a protective cover (1) ("Accessories", Page 65).

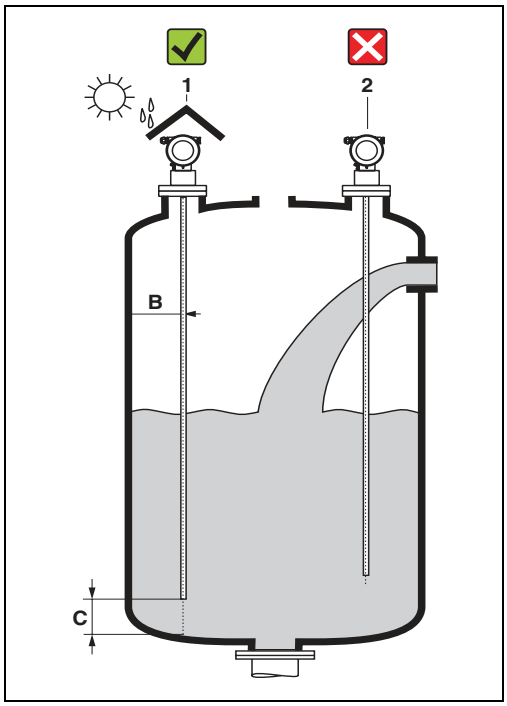

L00-FMP4xxxx-17-00-00-xx-007

Note!
Seal for devices with G1½" thread
Sealing form at the FMP45 corresponds the DIN 3852 part 1, screwed end form A.
The screwed end has an overall length of 45 mm. In addition, suitable sealing ring as per DIN 7603 with dimesnion of 48x55mm. Please use a sealing ring according to this standard in the form A, C or D and of a material that is resistant to the application.

Minimum distance B of rod and rope probes to the container wall:

The wall clearance can be chosen as desired as long as the probe does not touch the tank wall.

Note!
There should no bridges to the wall created by soiling or highly viscous media.

Welding the probe into the vessel

Caution!
Before welding the probe into the vessel, it must be grounded by a low-resistive connection. If this is not possible, the electronics as well as the HF module must be disconnected. Otherwise the electronics may be damaged.

Other installations

- Select the mounting location such that the distance to internals (5) (e.g. limit switch, struts) is > 300 mm over the entire length of the probe, also during operation.
- Probe must within the measuring span not touch any internals during operation.

Optimization options

- Interference echo suppression: Measurement can be optimised by electronically tuning out interference echoes.

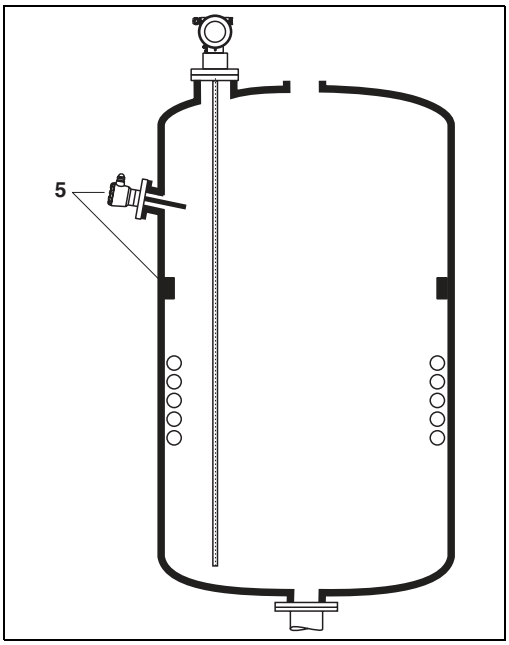

L00-FMP41Cxx-17-00-00-xx-001

Separable probes

If there is little mounting space (distance to the ceiling), it is advisable to use separable rod probes (∅16 mm).

- max. probe length 10 m (394 in)
- max. sideways capacity 20 Nm
- probes are separable several times with the lengths:
  – 500 mm (19.68 in)
  – 1000 mm (39.37 in)
- torque: 15 Nm

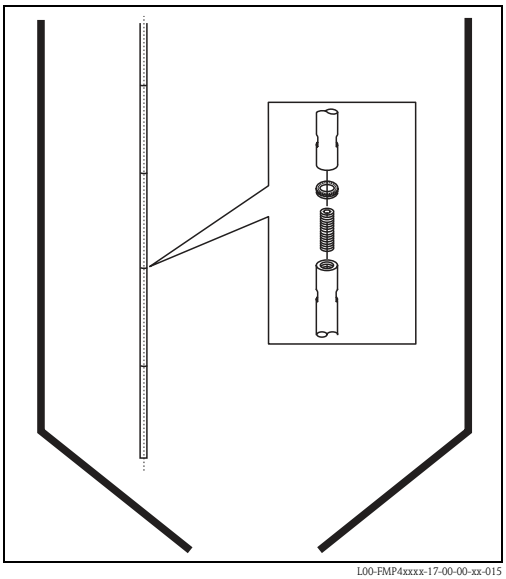

L00-FMP4xxxx-17-00-00-xx-015

Centering of probe end

If the centering disk is mounted at the end of the probe, it enables a reliable measuring.
See "Ordering structure", → 🖹 6.

- Centering disk for rod probes:
  – d = 45 mm (for DN50/2")
  – d = 75 mm (for DN80/3" + DN100/4")

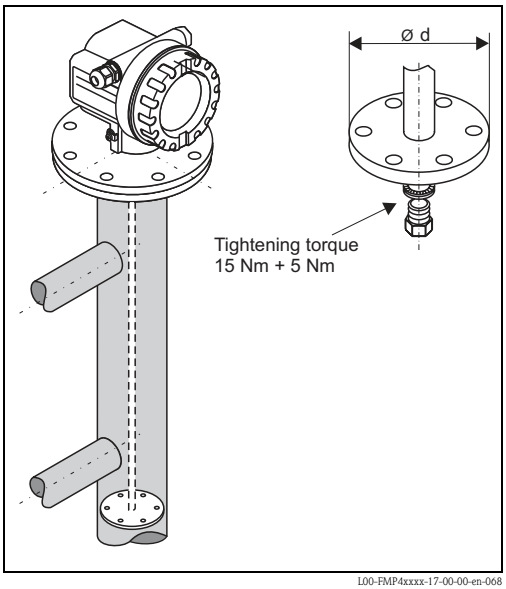

L00-FMP4xxxx-17-00-00-en-068

Supporting probes against warping

For WHG approval:
For probe lengths ≥ 3 m a support is required (see figure).

a. Rod probes

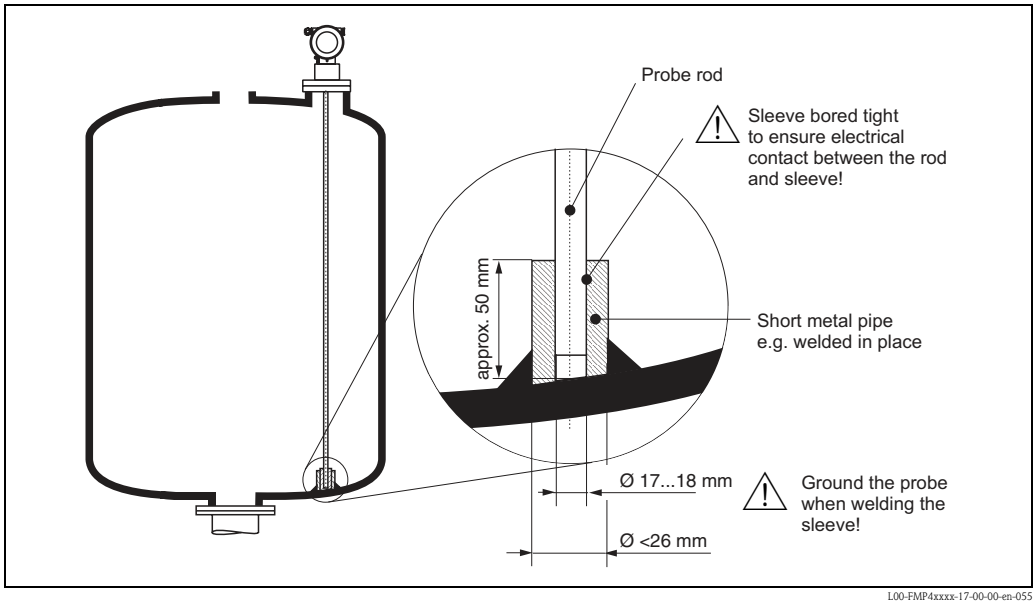

b. Coax probes

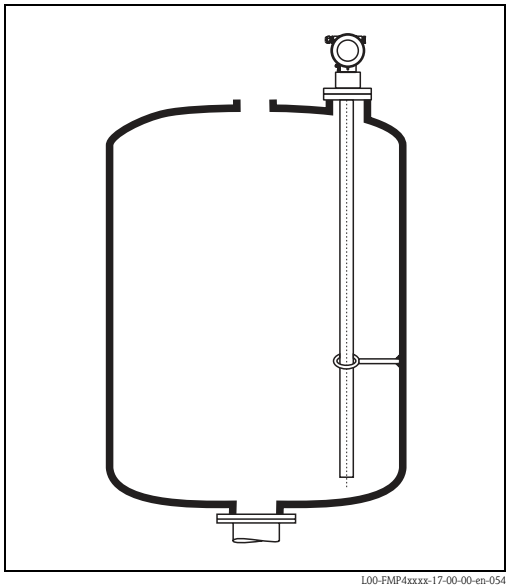

Installing with heat insulation

- If process temperatures are high (≥ 200 °C), FMP45 must be included in normal tank insulation to prevent the electronics heating up as a result of heat radiation or convection.
- The insulation may not exceed beyond the points labelled "**MAX**" in the drawing.

Process connection with flange DN50 to DN100

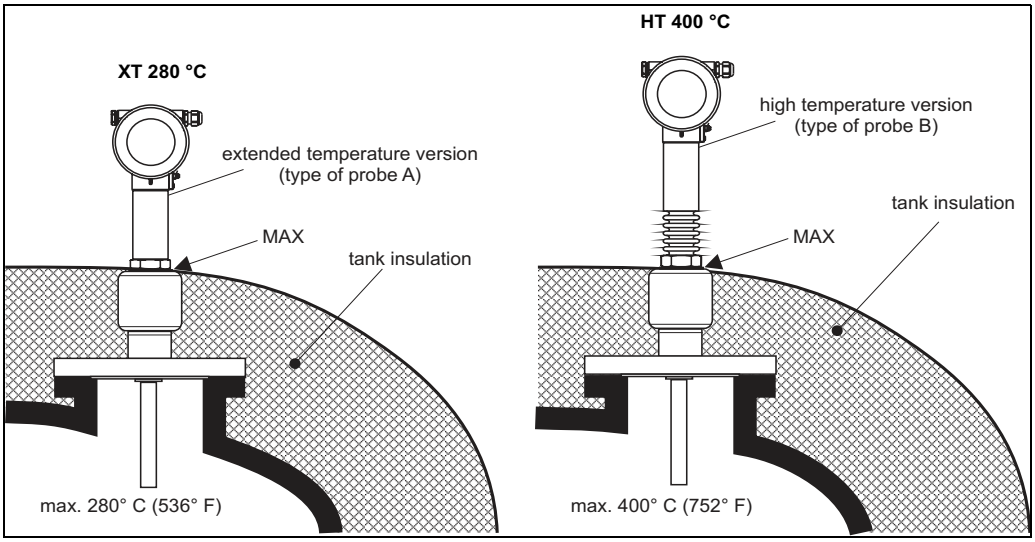

Process connection with adapter G1½" and 1½"NPT

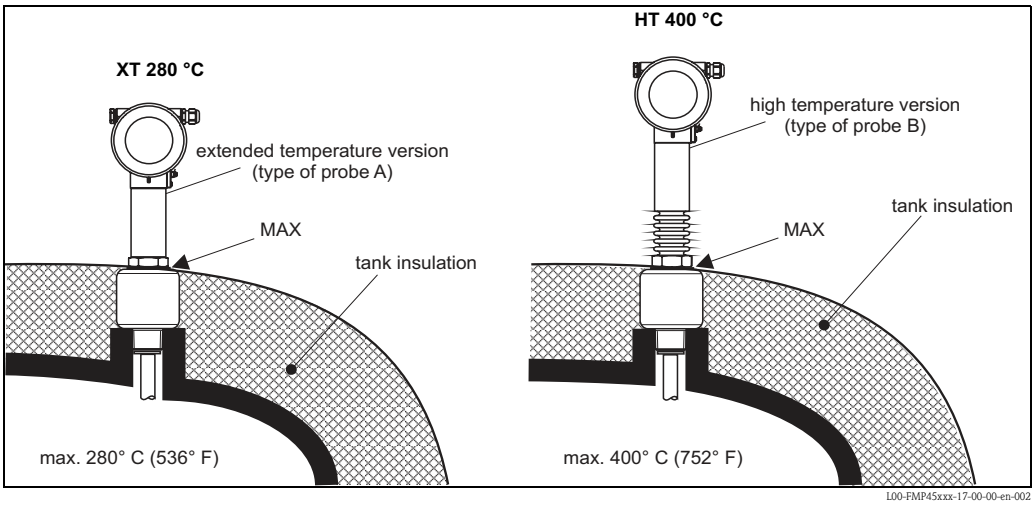

Note!
For saturated steam applications with FMP45 XT the process temperature should not exceed 200 °C (392 °F). For higher process temperatures use the HT version.

3.4.7 Special instructions

When installing in stirring tanks, observe lateral load of probes. Possibly check whether a non-contact radar would not be better suited, above all if the stirrer generates large mechanical loads on the probe.

Installation in horizontal cylindrical and standing tanks

- Use a rod probe for measuring ranges up to 4 m. For anything over this or if there is too free cover space use a rope probe.
- Any distance from wall, as long as occasional contact is prevented.
- When using metal tanks, it is preferable to mount probes (1) eccentrically.

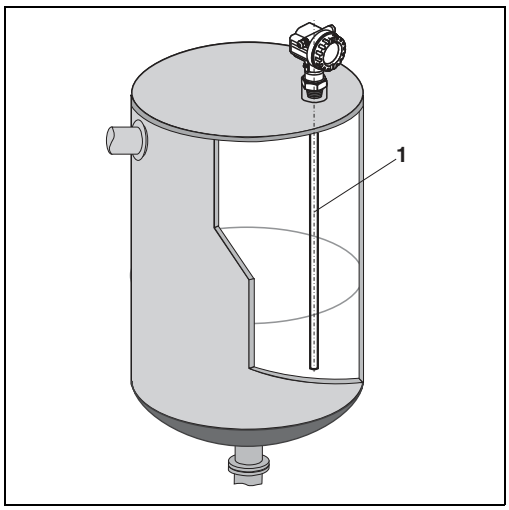

L00-FMP4xxxx-17-00-00-yy-049

Installation in stilling well or bypass

- Rod and rope probes can also be installed in pipes (stilling well, bypass).
- When installing in metal pipes up to DN150 (6"), the measuring sensitivity of the device increases such that liquids as of DC1.4 can be measured.
- Welded joints that protrude up to approx. 5 mm (0.2") inwards do not influence measurement.
- If a rod probe is used, the probe length must be 100 mm longer than the lower disposal.
- It must be ensured that the probe does not come into contact with the side wall. Where necessary, use a centering disk at the lower end of the probe ("Type of probe:", → 🖹 8)

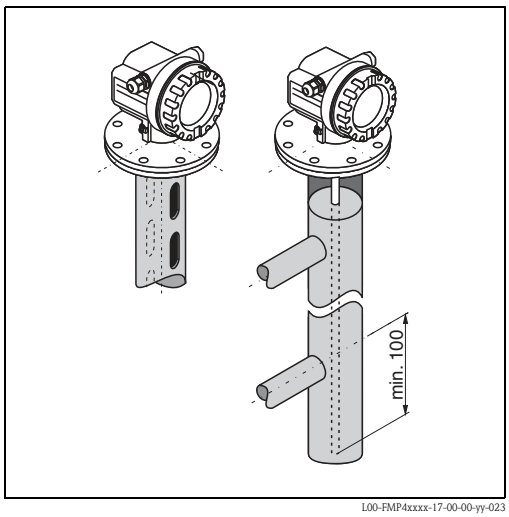

L00-FMP4xxxx-17-00-00-yy-023

Caution!
In vacuum applications and in applications where extremely condensate fermation may occur, there is the danger that the vessel is completely flooded. For media groups with high DC values, this may result in a measuring value lower than the actual level. Please contact your local Endress+Hauser representative for remedial actions.

3.4.8 Notes on special installation situations

Welding the probe into the vessel

Caution!
Before welding the probe into the vessel, it must be grounded by a low-resistive connection. If this is not possible, the electronics as well as the HF module must be disconnected. Otherwise the electronics may be damaged.

Installation at an angle

- For mechanical reasons, the probe should be installed as vertically as possible.
- With inclined installations the probe length has to be adjusted in dependence to the installation angle.
  – up to 1 m = 30°
  – up to 2 m = 10°
  – up to 4 m = 5°.

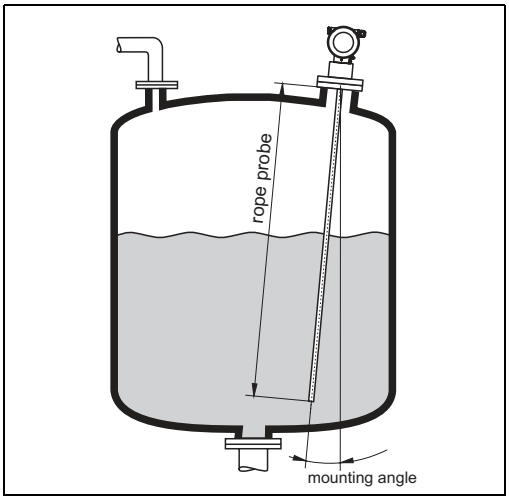

L00-FMP4xxxx-17-00-00-en-048

Installation in plastic containers

Please note that the "guided level radar" measuring principle requires a metallic surface at the process connection. When installing rod or robe probes in plastic silos, whose silo cover is made of plastic or silos with wood cover, the probes must either be mounted in a ≥DN50 (2") metallic flange, or a metal sheet with diameter of ≥ 200 mm must be mounted under the screw-in piece.

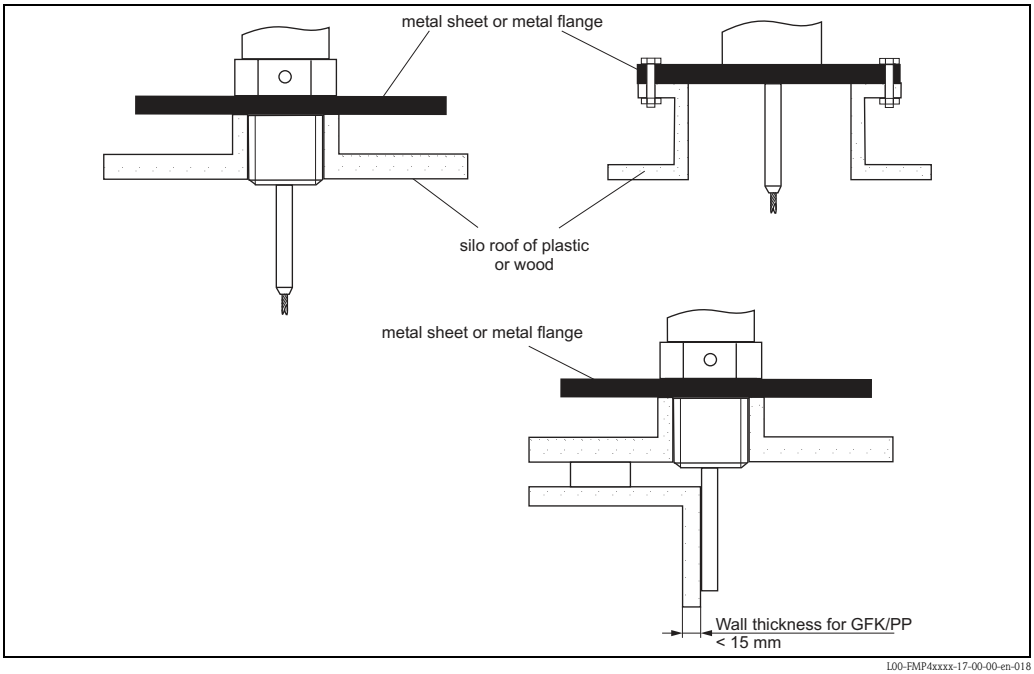

L00-FMP4xxxx-17-00-00-en-018

3.4.9 Installation for difficult to access process connections

Installation with remote electronic

- Wall and pipe bracket is contained in the scope of delivery and already mounted.
- Follow installation instructions, Page 16 ff.
- Mount housing on a wall or pipe as shown in the diagram.

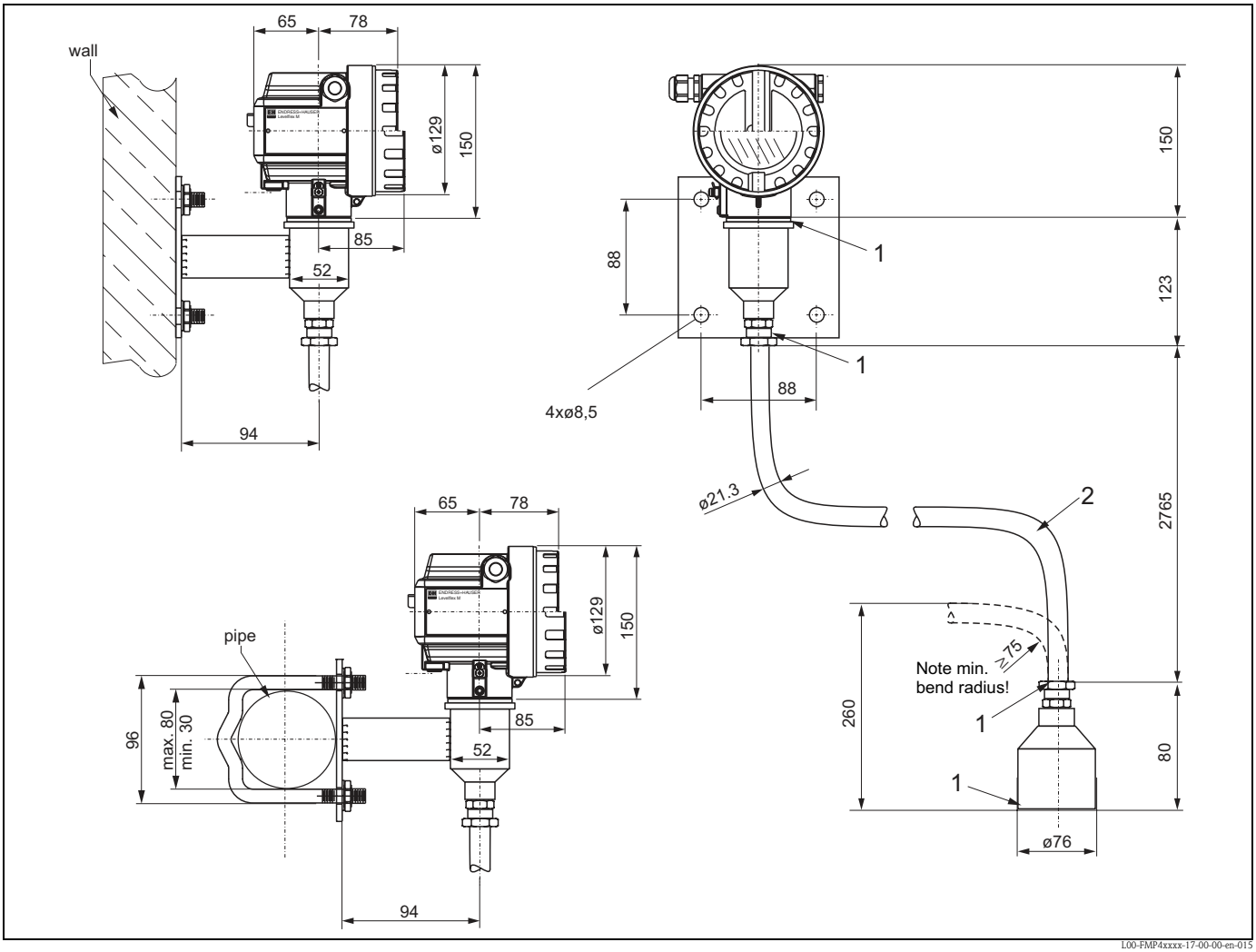

Note!
The protective hose cannot be disassembled at these points (1).

The ambient temperature for the connecting line (2) between the probe and the electronics must not be greater than 105°C. For the remote electronics, temperatures up to 280 °C or 400 °C (depending on the instrumeent version) are admissible at the process connection. The version with remote electronics consists of the probe, a connecting cable and the housing. If they are ordered as a complete unit they will be delivered assembled and cannot be separated.

3.4.10 Turn housing

After mounting, the housing can be turned 350° in order to simplify access to the display and the terminal compartment. Proceed as follows to turn the housing to the required position:

- Undo the fixing screws (1)
- Turn the housing (2) in the required direction
- Tighten up the fixing screws (1)

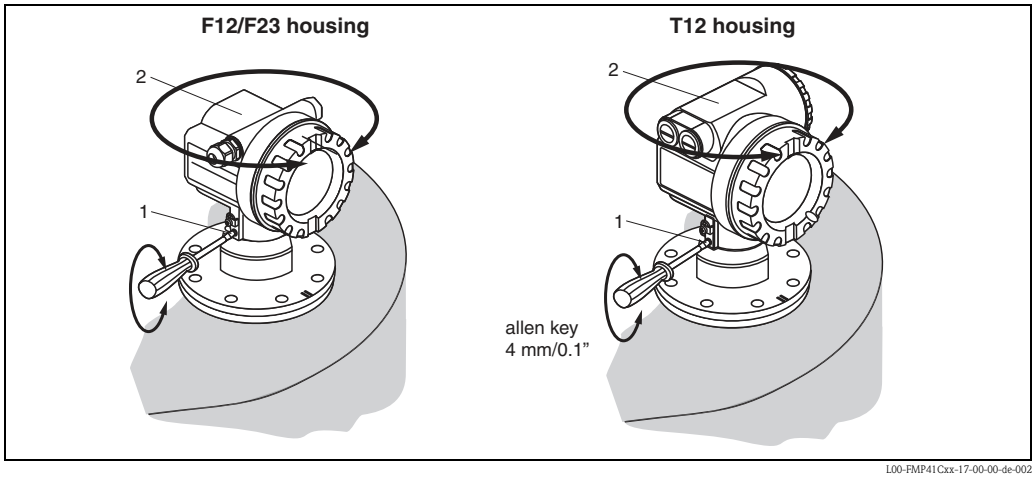

3.5 Post-installation check

After the measuring device has been installed, perform the following checks:

- Is the measuring device damaged (visual check)?
- Does the measuring device correspond to the measuring point specifications such as process temperature/pressure, ambient temperature, measuring range, etc.?
- Are the measuring point number and labeling correct (visual check)?
- Is the measuring device adequately protected against rain and direct sunlight (Page 65)?

4 Wiring

4.1 Quick wiring guide

Wiring in F12/F23 housing

Caution!

Before connection please note the following:

- The power supply must be identical to the data on the nameplate (1).
- Switch off power supply before connecting up the device.
- Connect Equipotential bonding to transmitter ground terminal (7) before connecting up the device.
- Tighten the locking screw (8):
  It forms the connection between the probe and the housing ground potential.

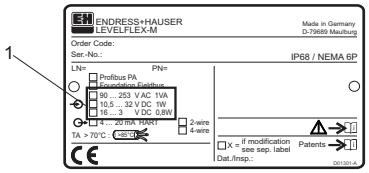

When you use the measuring system in hazardous areas, make sure you comply with national standards and the specifications in the safety instructions (XA's). Make sure you use the specific cable gland.

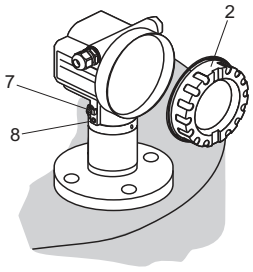

EX

On devices supplied with a certificate, the explosion protection is designed as follows:

- Housing F12/F23 - Ex ia:
  Power supply must be intrinsically safe (not for dust-Ex).
- The electronics and the current output are galvanically separated from the probe circuit.

Connect up the Levelflex M as follows:

Unplug display connector!

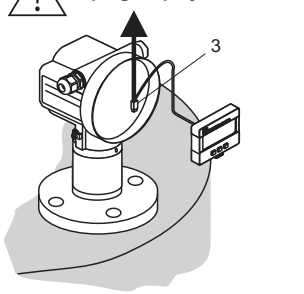

- Unscrew housing cover (2).
- Remove any display (3) if fitted.
- Remove cover plate from terminal compartment (4).
- Pull out terminal module slightly using "pulling loop" (only 2-wire).
- Insert cable (5) through gland (6).
  A standard installation cable is sufficient if only the analogue signal is used. Use a screened cable when working with a superimposed communications signal (HART).

EX

Only ground screening of the line (7) on sensor side.

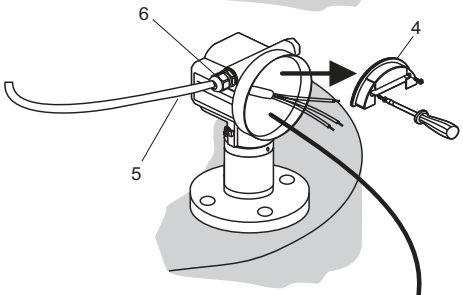

- Make connection (see pin assignment).
- Re-insert terminal module.
- Tighten cable gland (6). Max. torque 10...12 Nm!
- Tighten screws on cover plate (4).
- Insert display if fitted.
- Screw on housing cover (2).
  (on dust-Ex torque » 40 Nm).
- Switch on power supply.

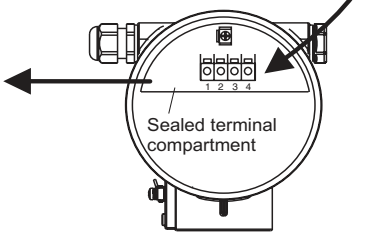

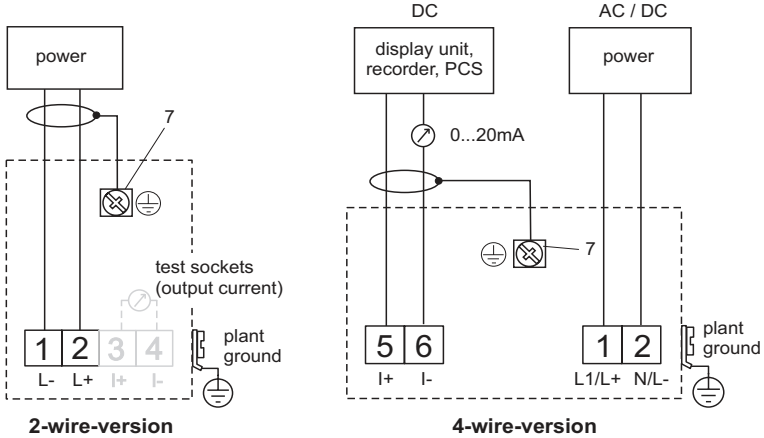

Note!

If 4-wire for dust-Ex-applications is used, the current output is **intrinsically save**.

L00-FMP41Cxx-04-00-00-en-001

Wiring in T12 housing

Caution!

Before connection please note the following:

- The power supply must be identical to the data on the nameplate (1).
- Switch off power supply before connecting up the device.
- Connect Equipotential bonding to transmitter ground terminal (7) before connecting up the device.
- Tigthen the locking screw (8):
  It forms the connection between the probe and the housing ground potential.

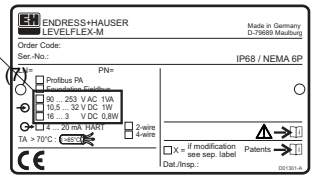

When you use the measuring system in hazardous areas, make sure you comply with national standards and the specifications in the safety instructions (XA's).
Make sure you use the specific cable gland.

Connect up the Levelflex M as follows:

EX

Before unscrew housing cover (2) at separate connection room turn off the power supply!

- Insert cable (3) through gland (4).
  A standard installation cable is sufficient if only the analogue signal is used. Use a screened cable when working with a superimposed communications signal (HART).

EX

Only ground screening of the line (5) on sensor side.

- Make connection (see pin assignment).
- Tighten cable gland (4).
  Max, torque 10 to 12 Nm!
- Screw on housing cover (2).
  (on dust-Ex torquet » 40 Nm)
- Switch on power supply.

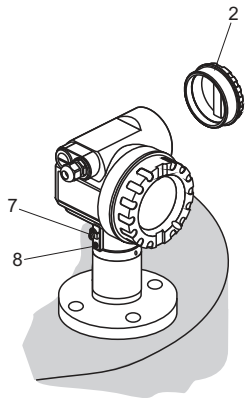

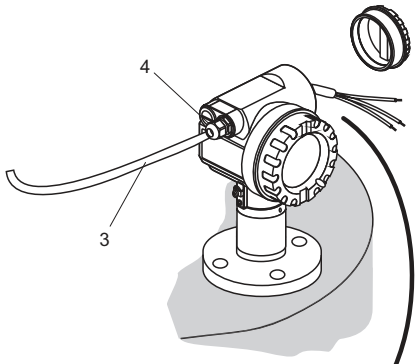

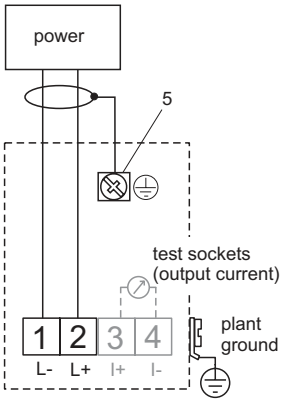

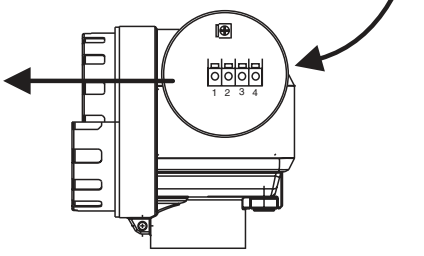

2-wire-version

L00-FMP41Cxx-04-00-00-en-002

4.2 Connecting the measuring unit

Terminal compartment

Three housings are available:
- Aluminium housing F12 with additionally sealed terminal compartment for:
  – standard,
  – Ex ia.
- Aluminium housing T12 with separate terminal compartment for:
  – standard,
  – Ex e,
  – Ex d
  – Ex ia (with overvoltage protection).
- Stainless steel 316L (1.4435) housing F23 for:
  – standard,
  – Ex ia.

After mounting, the housing can be turned 350° in order to simplify access to the display and the terminal compartment.

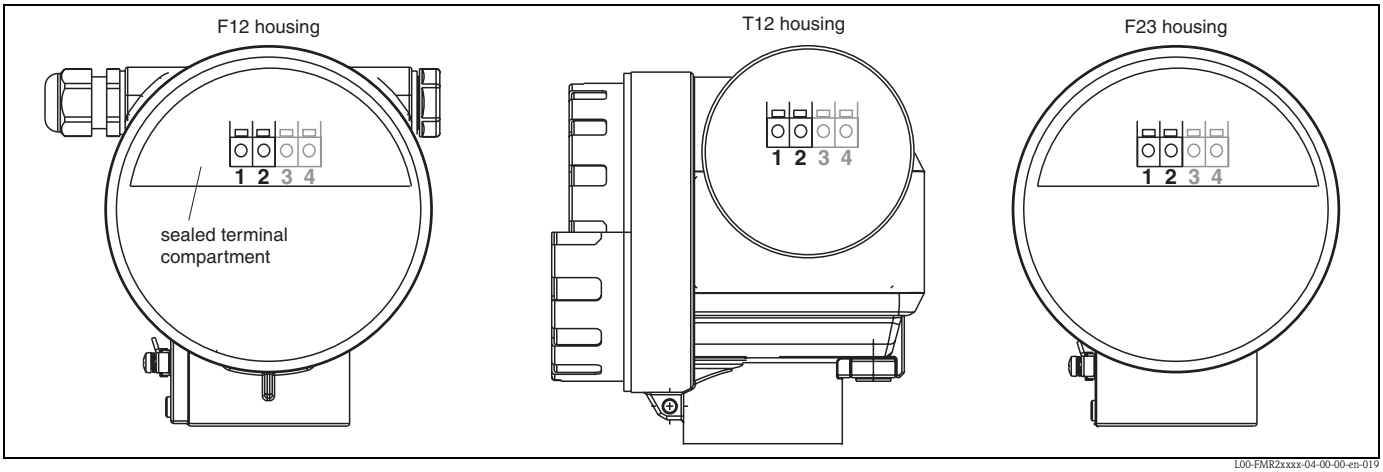

The device data are given on the nameplate together with important information regarding the analog output and voltage supply.
Housing orientation regarding the wiring see "Turn housing", Page 23.

Load HART

Minimum load for Hart communication: 250 Ω

Ground connection

It is necessary to make a good ground connection to the ground terminal on the outside of the housing, in order to achieve EMC security.

Cable gland

Type		Clamping area
Standard, Ex ia, IS	Plastic M20x1.5	5 to 10 mm
Ex em, Ex nA	Metal M20x1.5	7 to 10.5 mm

Terminals

For wire cross-sections of 0.5 to 2.5 mm^2

Cable entry

Cable gland: M20x1.5 (only cable entry for Ex d)
Cable entry: G½ or ½NPT

Supply voltage

HART, 2-wire

The following values are the voltages across the terminals directly at the device:

Communication		Current consumption	Terminal voltage
HART	standard	4 mA	16 V to 36 V
		20 mA	7.5 V to 36 V
	Ex ia	4 mA	16 V to 30 V
		20 mA	7.5 V to 30 V
	Ex em Ex d	4 mA	16 V to 30 V
		20 mA	11 V to 30 V
	Ex ic	4 mA	16 V ... 32 V
		20 mA	7,5 V ... 32 V
Fixed current, adjustable e.g. for solar power operation (measured value transferred at HART)	standard	11 mA	10 V to 36 V
	Ex ia	11 mA	10 V to 30 V
Fixed current for HART Multidrop mode	standard	4 mA[1)]	16 V to 36 V
	Ex ia	4 mA[1)]	16 V to 30 V

1) Start up current 11 mA.

HART residual ripple, 2-wire: $U_{ss} \leq 200$ mV

HART, 4-wire active

Version	Voltage	Max. load
DC	10.5 to 32 V	600 Ω
AC, 50/60 Hz	90 to 253 V	600 Ω

HART residual ripple, 4-wire, DC version: $U_{ss} = 2$ V, voltage incl. ripple within the permitted voltage (10.5 to 32 V).

Current consumption

Communication	Output current	Current consumption	Power consumption
HART, 2-wire	3.6 to 22 mA[1)]	—	min. 60 mW, max. 900 mW
HART, 4-wire (90 to 250 V_{AC})	2.4 to 22 mA	~ 3 to 6 mA	~ 3,5 VA
HART, 4-wire (10.5 to 32 V_{DC})	2.4 to 22 mA	~ 100 mA	~ 1 W

1) For HART-Multidrop: start up current is 11 mA.

Overvoltage protection

If the measuring device is used for the level measurement in flammable liquids which requires the use of an overvoltage protection according to EN/IEC 60079-14 or EN/IEC 60060-1 (10 kA, Puls 8/20 µs) it has to be ensured that

- the measuring device with integrated overvoltage protection with gas discharge tubes within the T12-enclosure is used, refer to "Ordering structure", → 📄 6
  or
- this protection is achieved by the use of other appropriate measures (external protection devices e.g. HAW562Z).

4.2.1 HART connection with Endress+Hauser RMA422 / RN221N

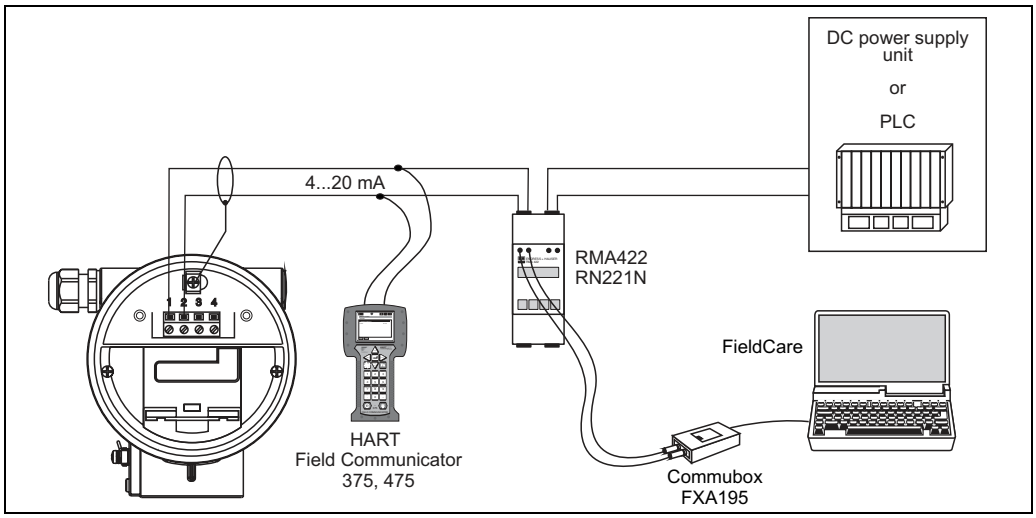

L00-FMP40xIx-04-00-00-en-005

4.2.2 HART connection with other supplies

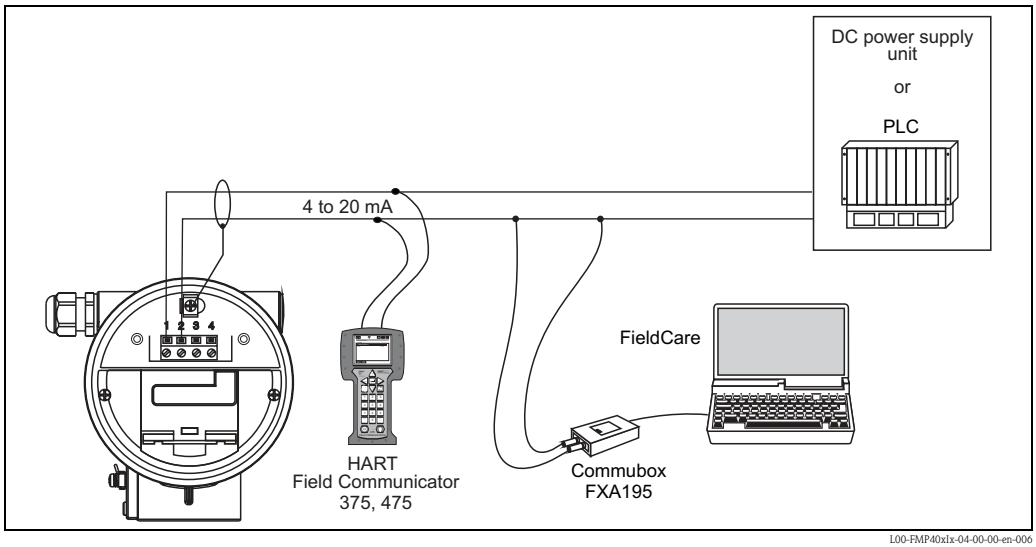

L00-FMP40xIx-04-00-00-en-006

4.3 Recommended connection

4.3.1 Equipotential bonding

Connect the Equipotential bonding to the external ground terminal (1) of the transmitter.

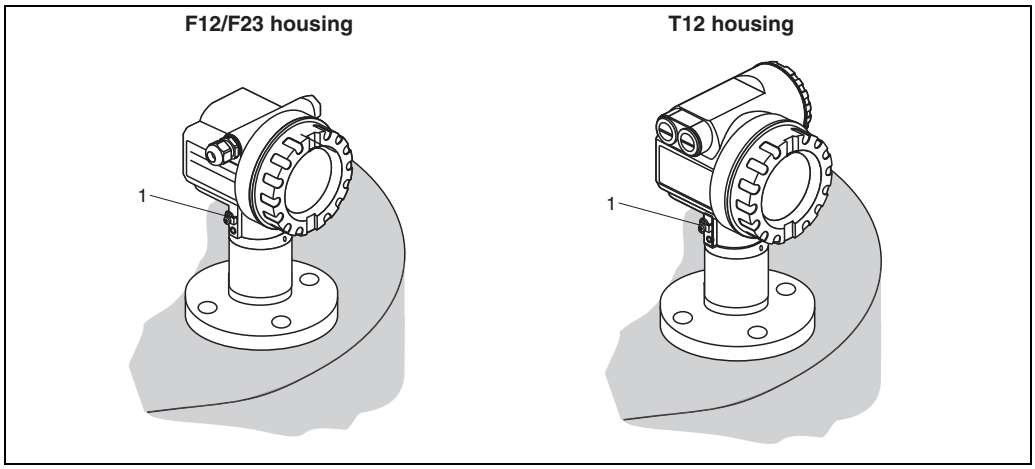

4.3.2 Wiring screened cable

Caution!
In Ex applications, the device must only be grounded on the sensor side. Further safety instructions are given in the separate documentation for applications in explosion hazardous areas.

4.4 Degree of protection

- with closed housing tested according to
  – IP68, NEMA6P (24 h at 1.83 m under water surface)
  – IP66, NEMA4X
- with open housing: IP20, NEMA1 (also ingress protection of the display)

4.5 Post-connection check

After wiring the measuring device, perform the following checks:
- Is the terminal allocation correct (Page 24 ff., 25)?
- Is the cable gland tight?
- Is the housing cover screwed tight?
- If auxiliary power is available:
  Is the device ready for operation and is the liquid crystal display visible?

5 Operation

5.1 Quick operation guide

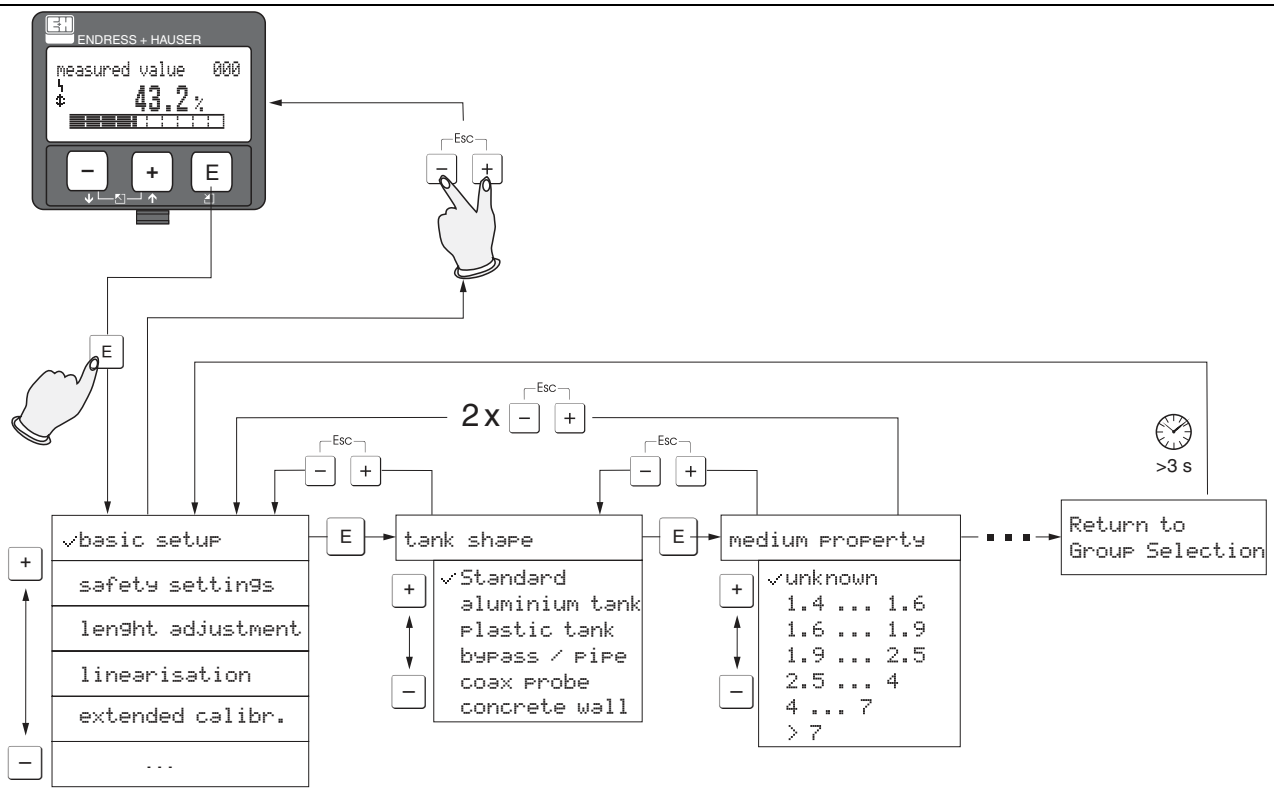

Selection and configuration in Operation menu:

1.) Change from Measured Value Display to **Group Selection** by pressing E

2.) Press − or + to select the required **Function Group** (e.g.. "basic setup (00)") and confirm by pressing E ➜ First **function** (e.g. "tank shape (002)") is selected.

Note!
The active selection is marked by a ✔ in front of the menu text.

3.) Activate Edit mode with + or −.

Selection menus:

a) Select the required **Parameter** in selected **function** (e.g. "tank shape (002)") with − or +.
b) E confirms selection ➜ ✔ appears in front of the selected parameter
c) E confirms the edited value ➜ system quits Edit mode
d) + / − (= Esc) interrupts selection ➜ system quits Edit mode

Typing in numerals and text:

a) Press + or − to edit the first character of the **numeral / text** (e.g. "empty calibr. (005)")
b) E positions the cursor at the next character ➜ continue with (a) until you have completed your input
c) if a ↵ symbol appears at the cursor, press E to accept the value entered ➜ system quits Edit mode
d) + / − (= Esc) interrupts the input, system quits Edit mode

4) Press E to select the next **function** (e.g. "medium property (003)")

5) Press + / − (= Esc) once ➜ return to previous **function** (e.g. "tank shape (002)")
Press + / − (= Esc) twice ➜ return to **Group selection**

6) Press + / − (= Esc) to return to **Measured value display**

L00-FMP4xxxx-19-00-00-en-001

5.1.1 General structure of the operating menu

The operating menu is made up of two levels:

- **Function groups (00, 01, 03, …, 0C, 0D):**
  The individual operating options of the device are split up roughly into different function groups. The function groups that are available include, e.g.: "**basic setup**", "**safety settings**.", "**output**", "**display**", etc.
- **Functions (001, 002, 003, …, 0D8, 0D9):**
  Each function group consists of one or more functions. The functions perform the actual operation or parameterisation of the device. Numerical values can be entered here and parameters can be selected and saved. The available functions of the "**basic setup**" **(00)** function group include, e.g.: "**tank properties**" **(002)**, "**medium property**" **(003)**, "**process cond.**" **(004)**, "**empty calibr.**" **(005)**, etc.

If, for example, the application of the device is to be changed, carry out the following procedure:

1. Select the "**basic setup**" **(00)** function group.
2. Select the "**tank properties**" **(002)** function (where the existing tank shape is selected).

5.1.2 Identifying the functions

For simple orientation within the function menus, for each function a position is shown on the display.

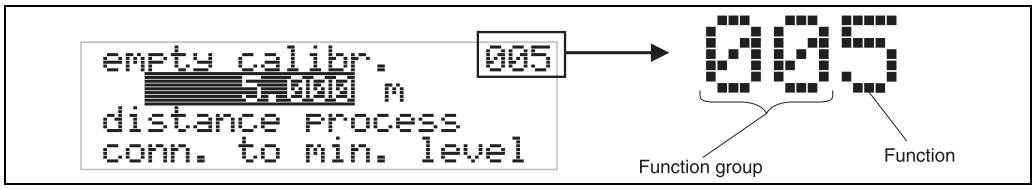

The first two digits identify the function group:

- **basic setup** **00**
- **safety settings** **01**
- **linearisation** **04**

...

The third digit numbers the individual functions within the function group:

- **basic setup** **00** →
  - **tank properties** **002**
  - **medium property** **003**
  - **process cond.** **004**

  ...

Here after the position is always given in brackets (e.g. "**tank properties**" **(002)**) after the described function.

5.2 Display and operating elements

5.2.1 Liquid crystal display (LCD)

Four lines with 20 characters each. Display contrast adjustable through key combination.

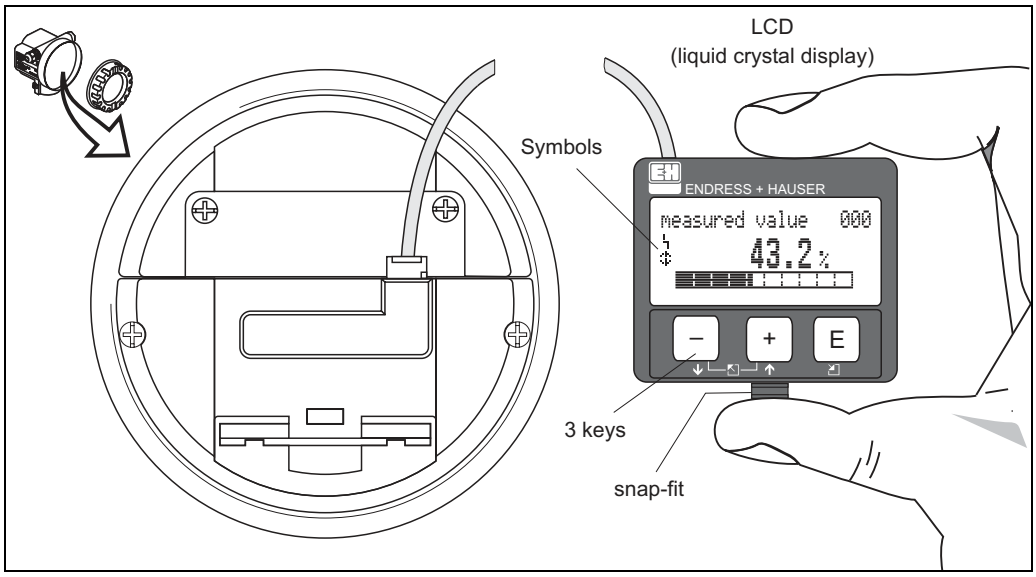

L00-FMxxxxxx-07-00-00-en-001

The VU331 LCD display can be removed to ease operation by simply pressing the snap-fit (see graphic above). It is connected to the device by means of a 500 mm cable.

5.2.2 Display

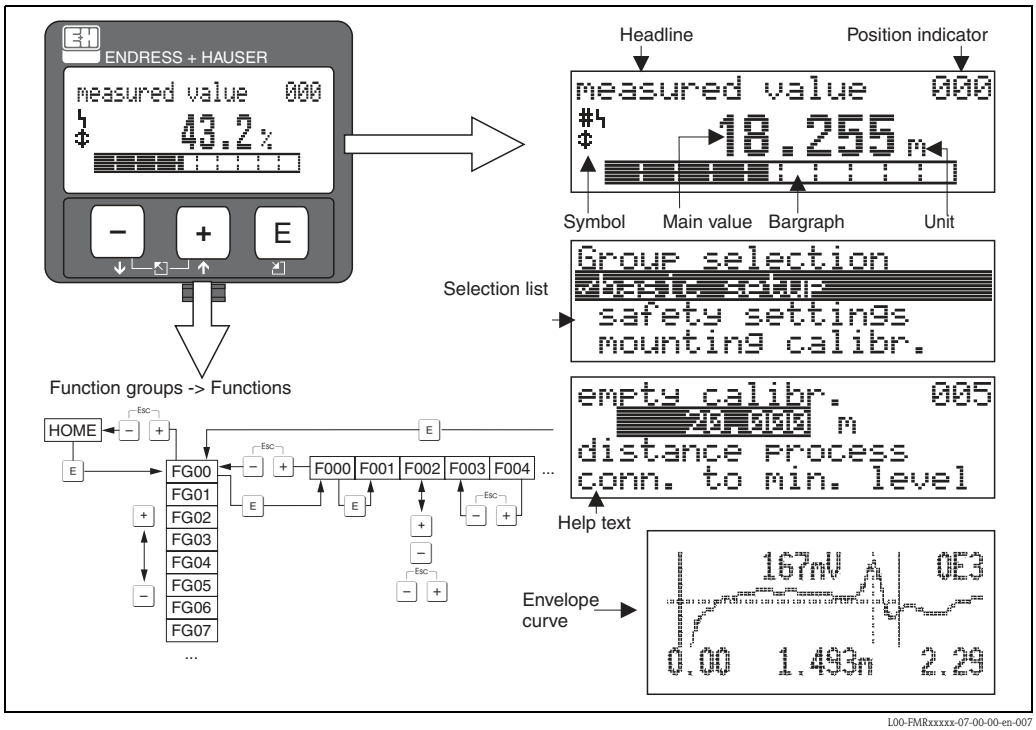

L00-FMRxxxxx-07-00-00-en-007

5.2.3 Display symbols

The following table describes the symbols that appear on the liquid crystal display:

Sybmol	Meaning
	**ALARM_SYMBOL** This alarm symbol appears when the device is in an alarm state. If the symbol flashes, this indicates a warning.
	**LOCK_SYMBOL** This lock symbol appears when the device is locked, i.e. if no input is possible.
	**COM_SYMBOL** This communication symbol appears when a data transmission via e.g. HART, PROFIBUS PA or FOUNDATION Fieldbus is in progress.

5.2.4 Key assignment

The operating elements are located inside the housing and are accessible for operation by opening the lid of the housing.

Function of the keys

Key(s)	Meaning
+ or	Navigate upwards in the selection list. Edit numeric value within a function.
− or	Navigate downwards in the selection list. Edit numeric value within a function.
Esc − + or	Navigate to the left within a function group.
E	Navigate to the right within a function group, confirmation.
+ and E or − and E	Contrast settings of the LCD.
+ and − and E	Hardware lock / unlock After a hardware lock, an operation of the device via display or communication is not possible! The hardware can only be unlocked via the display. An unlock parameter must be entered to do so.

5.3 Local operation

5.3.1 Locking of the configuration mode

The Levelflex can be protected in two ways against unauthorised changing of device data, numerical values or factory settings:

Function "unlock parameter" (0A4):

A value **<> 100** (e.g. 99) must be entered in "**unlock parameter**" **(0A4)** in the "**diagnostics**" **(0A)** function group. The lock is shown on the display by the symbol and can be released again either via the display or by communication.

Hardware lock:

The device is locked by pressing the [+], [−] and [E] keys at the same time.
The lock is shown on the display by the symbol and can **only** be unlocked again via the display by pressing the [+], [−] and [E] keys at the same time again. It is **not** possible to unlock the hardware by communication. All parameters can be displayed even if the device is locked.

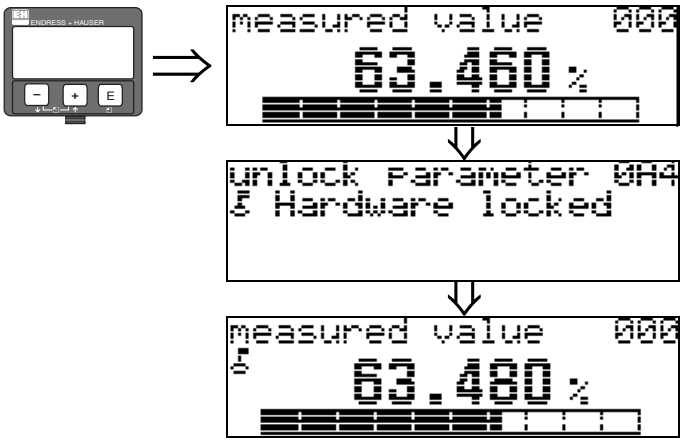

[+], [−] and [E] press simultaneous

The LOCK_SYMBOL appears on the LCD.

5.3.2 Unlocking of configuration mode

If an attempt is made to change parameters when the device is locked, the user is automatically requested to unlock the device:

Function "unlock parameter" (0A4):

By entering the unlock parameter (on the display or via communication)

100 = for HART devices

the Levelflex is released for operation.

Hardware unlock:

After pressing the [+], [−] and [E] keys at the same time, the user is asked to enter the unlock parameter.

100 = for HART devices

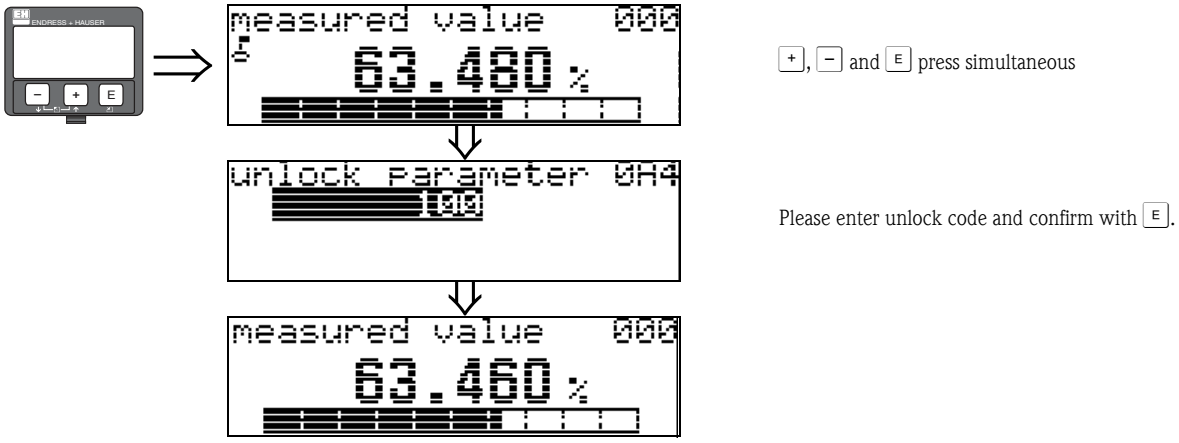

Caution!
Changing certain parameters such as all sensor characteristics, for example, influences numerous functions of the entire measuring system, particularly measuring accuracy. There is no need to change these parameters under normal circumstances and consequently, they are protected by a special code known only to the Endress+Hauser service organization. Please contact Endress+Hauser if you have any questions.

5.3.3 Factory settings (Reset)

Caution!
A reset sets the device back to the factory settings. This can lead to an impairment of the measurement. Generally, you should perform a basic setup again following a reset.

A reset is only necessary if the device...
- ...no longer functions
- ...must be moved from one measuring point to another
- ...is being de-installed /put into storage/installed



User input ("reset" (0A3)):

- 333 = customer parameters

333 = reset customer parameters

This reset is recommended whenever an device with an unknown "history" is to be used in an application:
- The Levelflex is reset to the default values.
- **The customer specific tank map is not deleted.**
- The mapping can also be deleted in the "**cust. tank map**" **(055)** function of the "**extended calibr**" **(05)** function group.
- A linearisation is switched to "**linear**" although the table values are retained. The table can be reactivated in the "**linearisation**" **(04)** function group.

List of functions that are affected by a reset:

- tank properties (002)
- medium cond. (003)
- process proper. (004)
- empty calibr. (005)
- full calibr. (006)
- output on alarm (010)
- output on alarm (011)
- outp. echo loss (012)
- ramp %span/min (013)
- delay time (014)
- safety distance. (015)
- in safety dist. (016)
- overspill protection (018)
- end of probe (030)
- level/ullage (040)
- linearisation (041)
- customer unit (042)
- max. scale (046)
- diameter vessel (047)
- check distance (051)
- range of mapping (052)
- start mapping (053)
- offset (057)
- output damping (058)
- low output limit (062)
- curr. output mode (063)
- fixed cur. value (064)
- 4mA value (068)
- language (092)
- back to home (093)
- format display (094)
- no of decimals (095)
- sep. character (096)
- unlock parameter (0A4)

A complete "**basic setup**" **(00)** must be activated.

5.4 Display and acknowledging error messages

Type of error

Errors that occur during commissioning or measuring are displayed immediately on the local display. If two or more system or process errors occur, the error with the highest priority is the one shown on the display.

The measuring system distinguishes between two types of error:

- **A (Alarm):**
  Device goes into a defined state (e.g. max 22 mA)
  Indicated by a constant symbol.
  (For a description of the codes, Page 71)
- **W (Warning):**
  Instrument continue measuring, error message is displayed.
  Indicated by a flashing symbol.
  (For a description of the codes, Page 71)
- **E (Alarm / Warning):**
  Configurable (e.g. loss of echo, level within the safety distance)
  Indicated by a constant/flashing symbol.
  (For a description of the codes, Page 71)

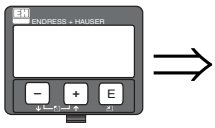



Error messages

Error messages appear as four lines of plain text on the display. In addition, a unique error code is also output. A description of the error codes, Page 71.

- The "**diagnostics**" **(0A)** function group can display current errors as well as the last errors that occurred.
- If several current errors occur, use [+] or [−] to page through the error messages.
- The last occurring error can be deleted in the "**diagnostics**" **(0A)** function group with the function "**clear last error**" **(0A2)**.

5.5 HART communication

Apart from local operation, you can also parameterise the measuring device and view measured values by means of a HART protocol. There are two options available for operation:
- Operation via the Field Communicator 375, 475.
- Operation via the Personal Computer (PC) using the operating program (e.g. FieldCare: For connections, Page 28 ff.).

5.5.1 Operation with the Field Communicator 375, 475

With the Field Communicator 375, 475 you can configure all the device functions via menu operation.

Note!
Further information on the HART handheld unit is given in the respective operating manual included in the transport bag of the Field Communicator 375, 475.

5.5.2 Endress+Hauser operating program

The operating program FieldCare is an Endress+Hauser Plant Asset Management Tool based on FDT technology. You can use Field-Care to configure all your Endress+Hauser devices, as well as devices from other manufacturers that support the FDT standard. Hardware and software requirements you can find on the internet:
www.endress.com it select your country it search: FieldCare it FieldCare it Technical Data.

FieldCare supports the following functions:
- Online configuration of transmitters
- Signal analysis via envelope curve
- Tank linearization
- Loading and saving of device data (upload/download)
- Documentation of the measuring point

Connection options:
- HART via Commubox FXA195 and the USB port of a computer
- Commubox FXA291 with ToF Adapter FXA291 via service interface

Menu-guided commissioning

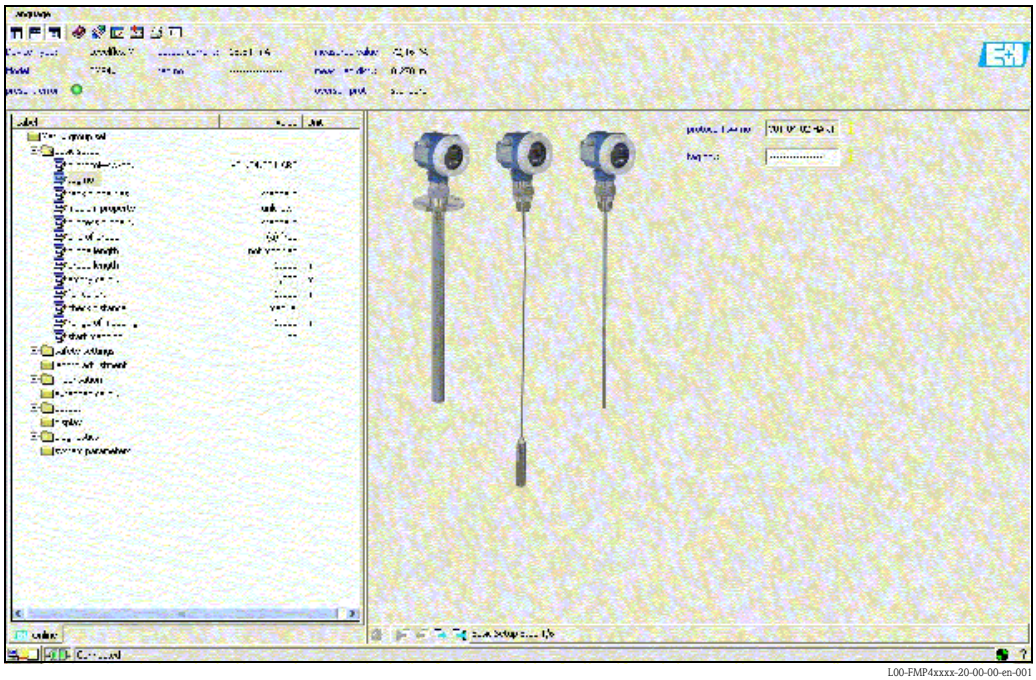

L00-FMP4xxxx-20-00-00-en-001

Signal analysis via envelope curve

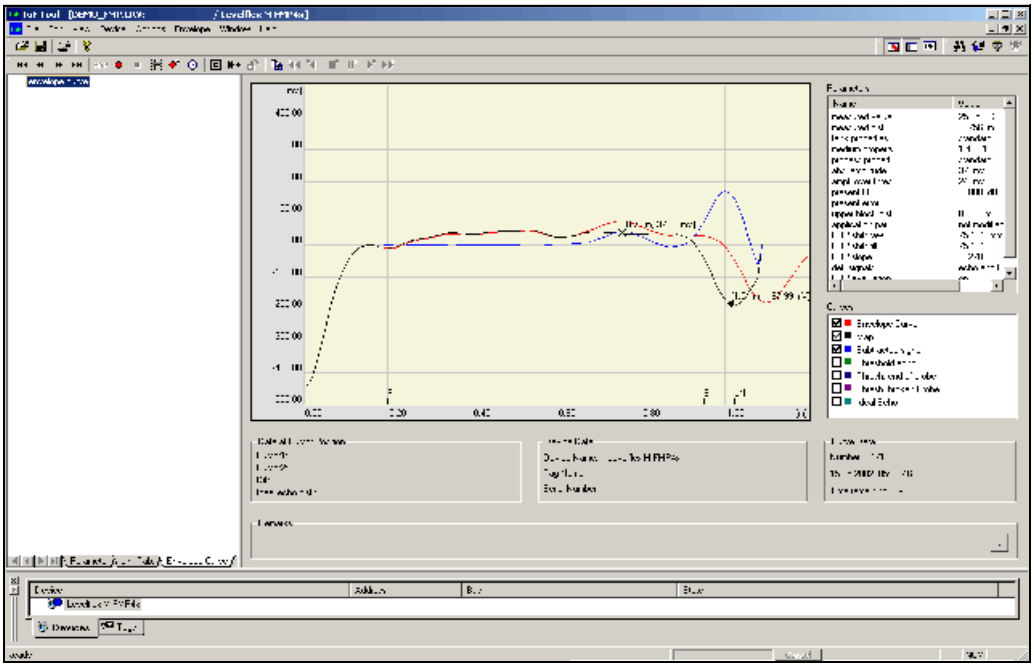

L00-FMP4xxxx-20-00-00-en-007

Tank linearization

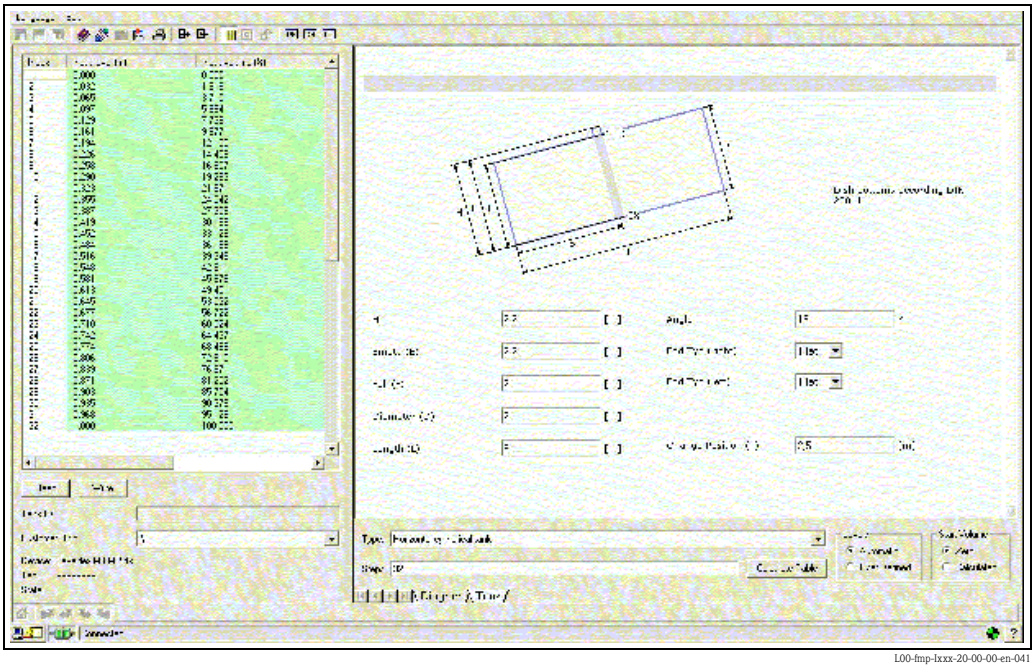

L00-fmp-lxxx-20-00-00-en-041

6 Commissioning

6.1 Function check

Make sure that all final checks have been completed before you start up your measuring point:
- Checklist "Post-installation check", → 23.
- Checklist "Post-connection check", → 29.

6.2 Switching on the measuring device

When the device is switched on for the first time, the following messages appear in a sequence of 5 s on the display: software version, communication protocoll and language selection

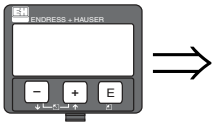

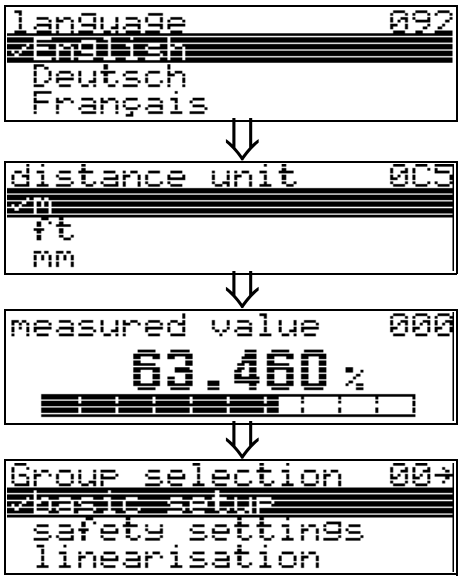

Select the language
(this message appears the first time the device is switched on)

Select the basic unit
(this message appears the first time the device is switched on)

The current measured value is displayed

After E is pressed, you reach the group selection

This selection enables you to perform the basic setup

6.3 Basic Setup

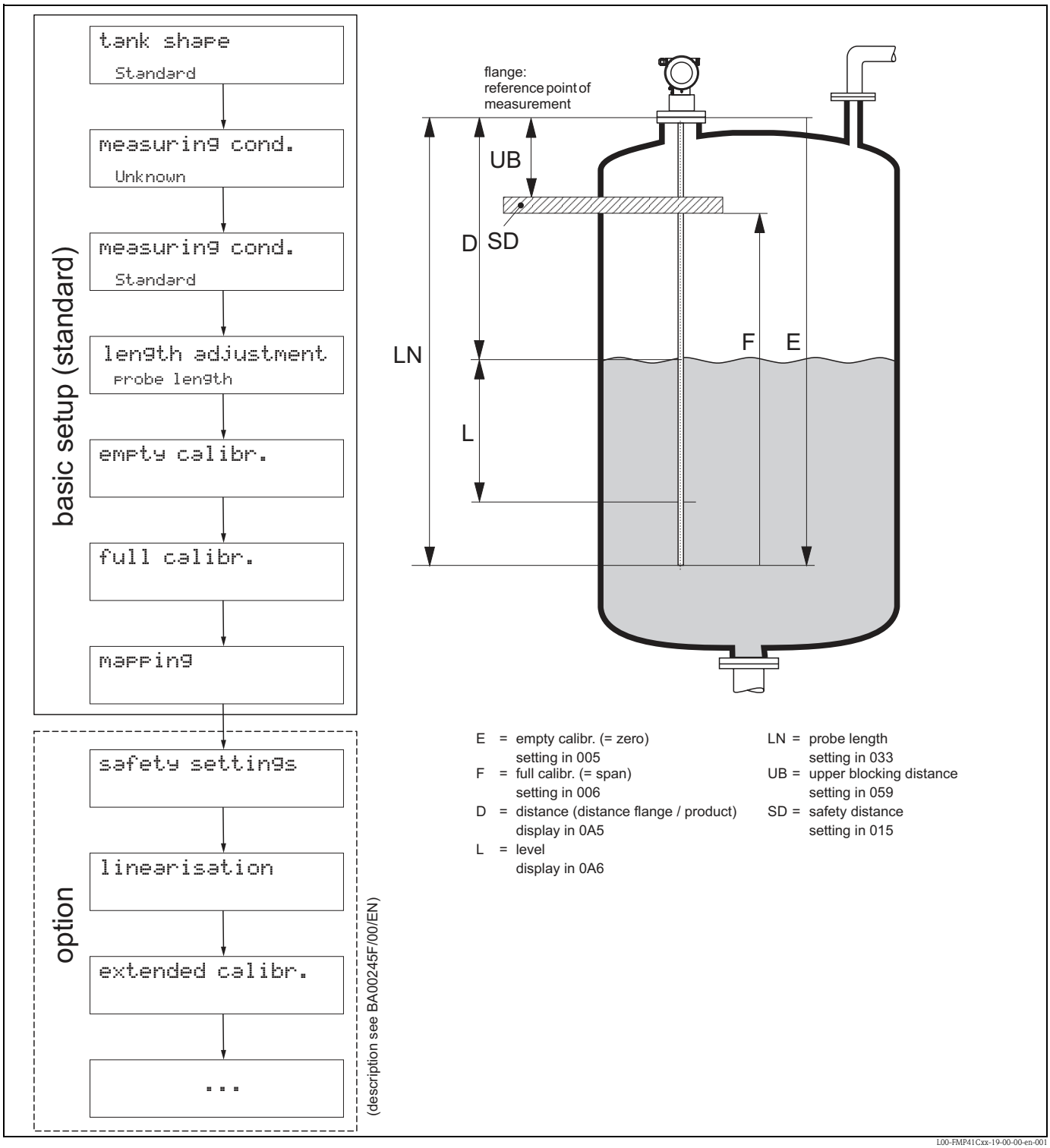

Caution!
The basic setup is sufficient for successful commissioning in most applications.
The Levelflex is initially adjusted at the factory to the probe length ordered, so that in most cases only the application parameters, that automatically adapt the device to the measuring conditions, need to be entered. For models with current output, the factory adjustment for zero point and span is "F" 4 mA and 20 mA, for digital outputs and the display module 0 % and 100 %.
A linearisation function with max. 32 points, that is based on a manually or semi-automatically input table, can be activated on-site or via remote operation. This function enables, for example, the conversion of the level into units of volume or weight.

Note!
The Levelflex M allows to check for broken probe. On delivery, this function is switched off, because otherwise shortening of the probe would be mistaken for a broken probe.
In order to activate this function, perform the following steps:

1. With the probe uncovered, perform a mapping ("**range of mapping**" **(052)** and "**start mapping.**" **(053)**).
2. Activate the "**broken probe det**" **(019)** function in the "**safety settings**" **(01)** function group.

Complex measuring operations necessitate additional functions that the user can use to customise the Levelflex as necessary to suit his specific requirements. The functions available to do this are described in detail in the BA00245F/00/EN.
Comply with the following instructions when configuring the functions in the "**basic setup**" **(00)**:

- Select the functions as described, Page 30.
- Certain functions (e.g. starting an interference echo mapping (053)) prompt you to confirm your data entries. Press [+] or [−] to select "**YES**" and press [E] to confirm. The function is now started.
- If you do not press a key during a configurable time period (→ function group "**display (09)**") , an automatic return is made to the home position (measured value display).

Note!

- The device continues to measure while data entry is in progress, i.e. the current measured values are output via the signal outputs in the normal way.
- If the envelope curve mode is active on the display, the measured values are updated in a slower cycle time. Thus, it is advisable to leave the envelope curve mode after the measuring point has been optimised.
- If the power supply fails, all preset and parameterised values remain safely stored in the EEPROM.
- All functions are described in detail, as is the overview of the operating menu itself, in the manual **"BA00245F – Description of Instrument Functions"** on the enclosed CD-ROM.

6.4 Basic Setup with the VU331

Function "measured value" (000)



This function displays the current measured value in the selected unit (see "**customer unit**" **(042)**) function). The number of digits after decimal point can be selected in the "**no.of decimals**" **(095)** function.

6.4.1 Function group "basic setup" (00)



Function "tank properties" (002)

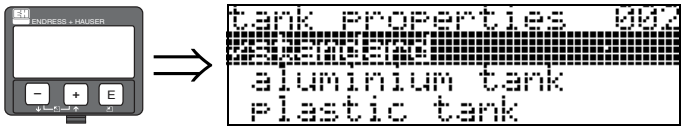

This function is used to select the tank properties.

Selection:
- **standard**
- aluminium tank
- plastic tank
- bypass / pipe
- coax probe
- concrete wall

standard

The "**standard**" option is recommended for normal containers for rod and rope probes.

aluminium tank

The "**aluminium tank**" option is designed especially for high aluminium silos that cause an increased level of noise when empty. This option is only useful for probes longer than 4 m. For short probes (< 4 m) select the "**standard**" option!

Note!
If "**aluminium tank**" is selected, the device calibrates of its own accord when first filled, depending on the medium's properties. Slope errors can, therefore, occur when beginning the first filling procedure.

plastic tank

Select the "**plastic tank**" option when installing probes in wood or plastic containers **without** metallic surfaces at the process connection (see installation in plastic containers, → Page 21 ff.). When using a metallic surface at the process connection, the "**standard**" option is sufficient!

Note!
In principle the employment of a metallic surface area should be preferred at the process connection!

bypass / pipe

The "**bypass / pipe**" option is designed especially for the installation of probes in a bypass or a stilling well. If this option is selected, the upper blocking distance is preset to 100 mm.

coax probe

Select the "**coax probe**" option when using a coaxial probe. When this setting is made, the evaluation is adapted to the high sensitivity of the coax probe. This option should, therefore, **not** be selected when using rope or rod probes.

concrete wall

The "**concrete wall**" option takes into account the signal-damping property of concrete walls when mounting with < 1 m distance to the wall.

Function "medium property" (003)

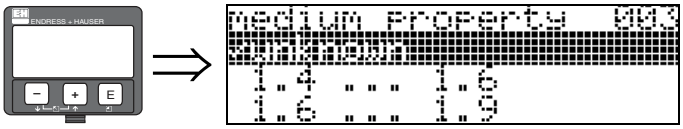

This function is used to select the dielectric constant.

Selection:
- **unknown**
- 1.4 ... 1.6 (use coaxial or Rod probe with installation in metallic pipes ≤ DN150)
- 1.6 ... 1.9
- 1.9 ... 2.5
- 2.5 ... 4.0
- 4.0 ... 7.0
- > 7.0

Media group	DC (Εr)	Typical liquids	Typ. measuring range
1	1.4 to 1.6	– Condensed gases, e.g. N_2, CO_2	4 m (157"), when installed in metallic pipes
2	1.6 to 1.9	– Liquefied gas, e.g. Propane – Solvent – Frigen / Freon – Palm oil	9 m (354")
3	1.9 to 2.5	– Mineral oils, fuels	12 m (472")
4	2.5 to 4	– Benzene, styrene, toluene – Furan – Naphthalene	16 m (629")
5	4 to 7	– Chlorobenzene, chloroform – Cellulose spray – Isocyanate, aniline	25 m (984")
6	> 7	– Aqueous solutions – Alcohols – Acids, alkalis	30 m (1181")

The lower group applies to very loose or loosened bulk solids. Reduction of the max. possible measuring range by means of:
- Extremely loose surfaces of bulk solids, e.g. bulk solids with low piled density when filled pneumatically.
- Build-up, primarily of moist products.

Note!
Due to the high diffusion rate of ammonia it is recommended to use the FMP45 with gas-tight bushing for measurements in this medium.

Function "process propert." (004)

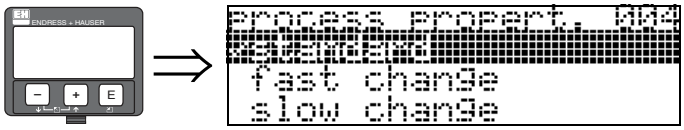

Use this function to adapt the device reaction to the filling speed in the tank. The setting impacts on an intelligent filter.

Selection:
- **standard**
- fast change
- slow change
- test: no filter

Selection:	standard	fast change	slow change	test:no filter
Application:	For all normal applications, bulk solids and fluids at low to medium filling speed and sufficiently large tanks.	Small tanks, primarily with fluids, at high filling speeds.	Applications with strong surface movement, e.g. caused by stirrer, primarily large tanks with slow to medium filling speed.	Shortest reaction time: ■ For test purposes ■ Measurement in small tanks at high filling speeds, if "rapid change" setting is too slow.
2-wire electronics:	Dead time: 4 s Rise time: 18 s	Dead time: 2 s Rise time: 5 s	Dead time: 6 s Rise time: 40 s	Dead time: 1 s Rise time: 0 s
4-wire electronics:	Dead time: 2 s Rise time: 11 s	Dead time: 1 s Rise time: 3 s	Dead time: 3 s Rise time: 25 s	Dead time: 0,7 s Rise time: 0 s

Function "end of probe" (030)

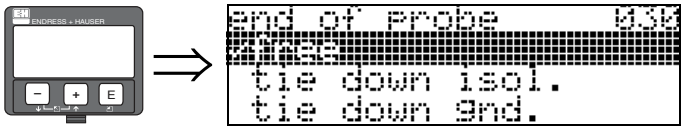

Use this function to select the polarity of the probe end signal. If the probe end is uncovered or in an insulated attachment, there is a negative probe end signal.
The signal from the probe end is positive if the attachment is grounded.

Selection:
- **free**
- tie down isol.
- tie down gnd. [1)]

1) If using a metallic centering of probe end.

Function "probe length" (031)

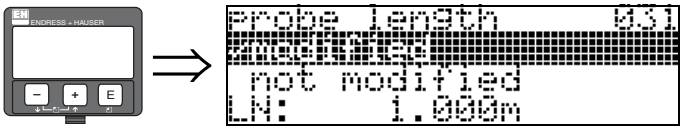

Use this function to select whether the probe length was changed after factory calibration. Only then is it necessary to enter or correct the probe length.

Selection:
- **not modified**
- modified

Note!
If "modified" was selected in the "**probe length**" **(031)** function, the probe length is defined in the next step.

Function "probe" (032)



Use this function to select whether the probe is at the time of the commisioning uncovered or covered. If the probe is uncovered, the Levelflex can determine the probe length automatically "**determine length**" **(034)** function. If the probe is covered, a correct entry is required in the "**probe length**" **(033)** function.

Selection:
- **free**
- covered

Function "probe length" (033)



Use this function, the probe length can be entered manually.

Function "determine length" (034)

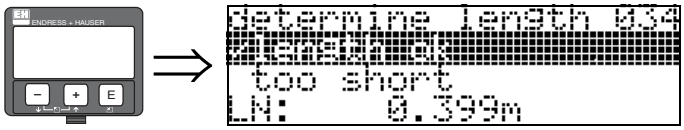

Use this function, the probe length can be determined automatically.
Due to the mounting conditions, the automatically determined probe length may be larger than the actual probe (typically 20 to 30 mm longer). This has no influence on the measuring accuracy.
When entering the empty value for a linearisation, please use the "empty calibration" instead of the automatically determined probe length.

Selection:
- **length ok**
- too short
- too long

After selection "length too short" or "length too long", the calculation of the new value need approx. 10 s.

Function "empty calibr." (005)

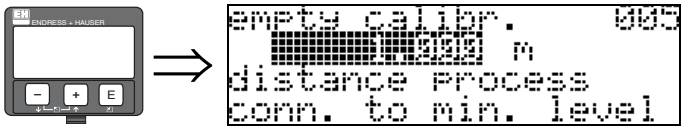

This function is used to enter the distance from the flange (reference point of the measurement) to the minimum level (= zero).

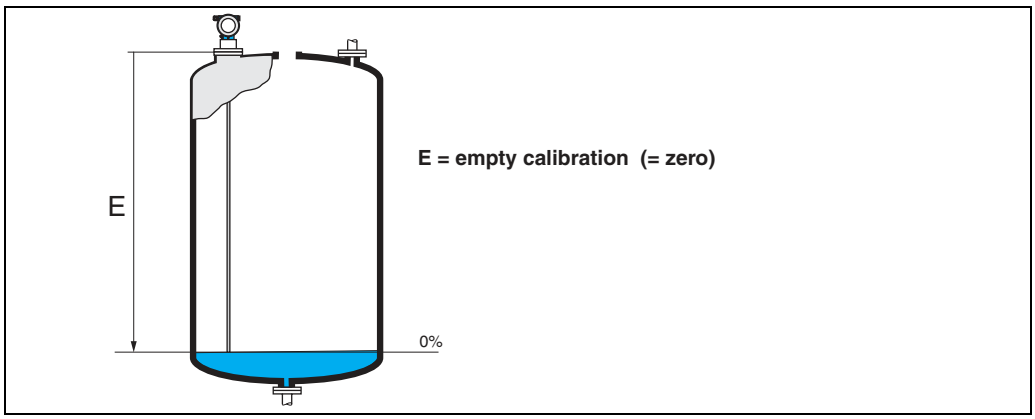

L00-FMP4xxxx-14-00-06-en-008

Function "full calibr." (006)



This function is used to enter the distance from the minimum level to the maximum level (= span).

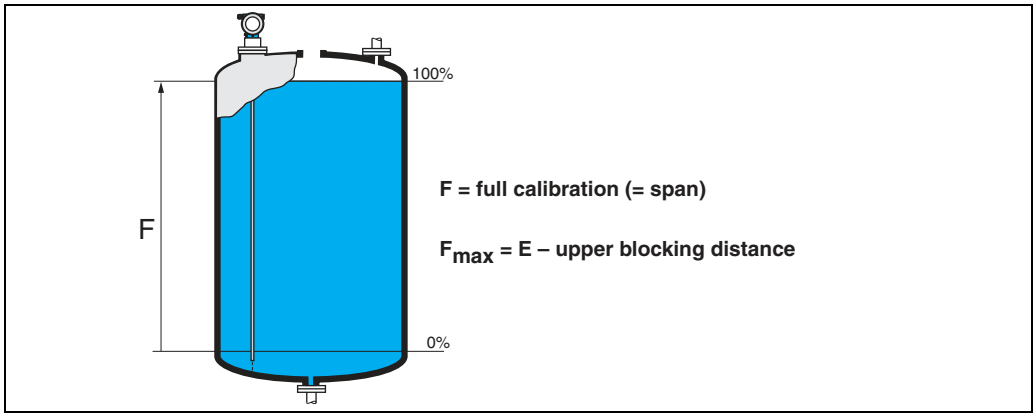

Note!
The usable measuring range lies between the upper blocking distance and the probe end. The values for empty distance "E" and span "F" can be set independently of this.

Function "dist./meas. value" (008)

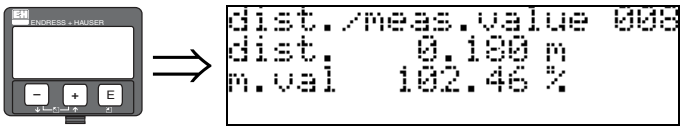

The **distance** measured from the reference point to the product surface and the **meas. value** calculated with the aid of the empty adjustment are displayed. Check whether the values correspond to the actual meas. value or the actual distance. The following cases can occur:

- Distance correct – meas. value correct ⓘt continue with the next function "**check distance**" **(051)**
- Distance correct – meas. value incorrect ⓘt Check "**empty calibr.**" **(005)**
- Distance incorrect – meas. value incorrect ⓘt continue with the next function "**check distance**" **(051)**

Function "check distance" (051)

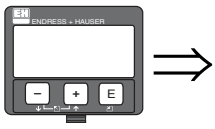



This function triggers the mapping of interference echoes. To do so, the measured distance must be compared with the actual distance to the product surface. The following options are available for selection:

Selection:
- distance = ok
- dist. too small
- dist. too big
- dist. unknown
- **manual**
- probe free

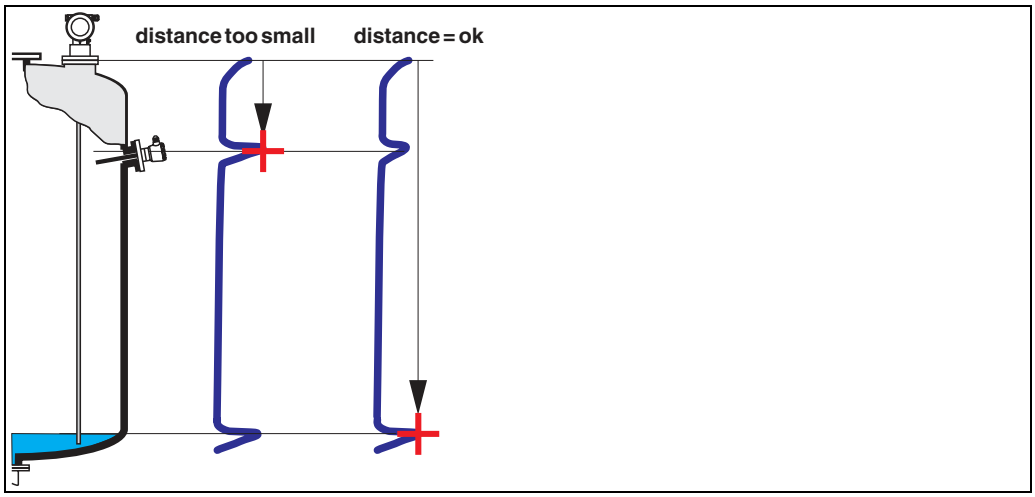

distance = ok
Use this function at part-covered probe. Choosing function "**manual**" or "**probe free**" at free probe.
- mapping is carried out up to the currently measured echo
- The range to be suppressed is suggested in the "**range of mapping**" **(052)** function

Anyway, it is wise to carry out a mapping even in this case.

Note!
At free probe, the mapping should be confirmed with the choice "**probe free**".

dist. too small
- At the moment, an interference is being evaluated
- Therefore, a mapping is carried out including the presently measured echoes
- The range to be suppressed is suggested in the "**range of mapping**" **(052)** function

dist. too big
- This error cannot be remedied by interference echo mapping
- Check the application parameters **(002), (003), (004)** and "**probe length.**" **(031)**

dist. unknown
If the actual distance is not known, no mapping can be carried out.

manual
A mapping is also possible by manual entry of the range to be suppressed. This entry is made in the "**range of mapping**" **(052)** function.

Caution!
The range of mapping must end 0.3 m (20") before the echo of the actual level. In case of empty vessel it is possible to make a map over the whole probe length.

probe free
If the probe is uncovered, mapping is carried out along the whole probe length.

Caution!
Only begin mapping in this function if the probe is safely uncovered. Otherwise, the device will not make correct measurements!

Function "range of mapping" (052)



This function displays the suggested range of mapping. The reference point is always the reference point of the measurement (see Page 41 ff.). This value can be edited by the operator.
For manual mapping, the default value is 0.3 m.

Function "start mapping" (053)



This function is used to start the interference echo mapping up to the distance given in "**range of mapping**" **(052)**.

Selection:
- **off**: no mapping is carried out
- on: mapping is started

Function "dist./meas. value" (008)

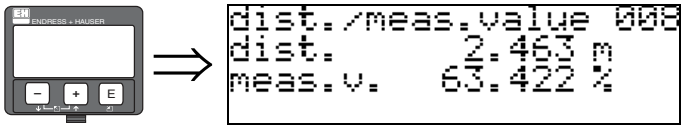

The distance measured from the reference point to the product surface and the meas. value calculated with the aid of the empty alignment are displayed again. Check whether the values correspond to the actual meas. value or the actual distance. The following cases can occur:

- Distance correct – meas. value correct ⓘ basic setup completed
- Distance incorrect – meas. value incorrect ⓘ a further interference echo mapping must be carried out "**check distance**" **(051)**.
- Distance correct – meas. value incorrect ⓘ check "**empty calibr**" **(005)**

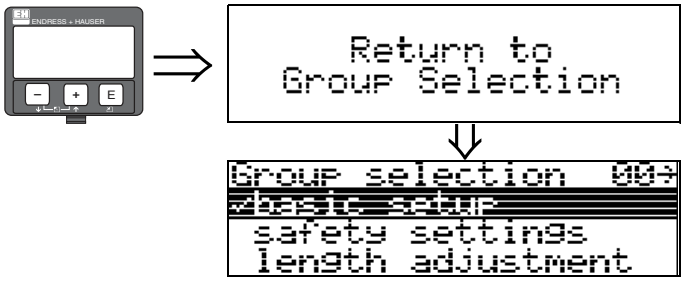

After 3 s, the following message appears

Note!
After the basic setup, an evaluation of the measurement with the aid of the envelope curve ("**envelope curve**" **(0E)** function group) is recommended (see Page 54).

6.5 Blocking distance

Function "upper block. dist" (059)

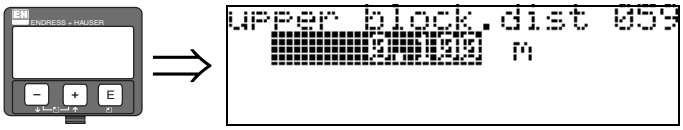

For rod probes and for rope probes with lengths of up to 8 m, the upper blocking distance is preset to 0.2 m on delivery. For rope probes with lengths of more than 8 m, the upper blocking distance is preset to 2.5 % of the probe length. For media with DC > 7, the upper blocking distance for rod and rope probes can be reduced to 0.1 m, if the probe is mounted flush with the wall or in a nozzle of maximum 50 mm.

Blocking distance and measuring range

At the lower end of the probe there is no blocking distance but a transition region with reduced accuracy, see section "Maximum measured error", Page 52.

FMP45	LN [m]		UB [m]
	min	max	min
Rod probe	0.3	4	0.2 [1]
Rope probe	1	35	0.2[2]
Coax probe	0.3	4	0

1) The indicated blocking distances are preset. At media with DC > 7, the upper blocking distance UB can be reduced to 0.1 m for rod and rope probes. The upper blocking distance UB can be entered manually.

Note!
Within the upper and lower blocking distance, a reliable measurement can not be guaranteed.

For stilling well applications

The upper blocking distance (UB) is preset to 100 mm when the "bypass/pipe" parameter has been selected in the "**tank properties**" **(002)** function.

Maximum measured error

Typical statements for reference conditions:
DIN EN 61298-2, percentage of the span.

Output:	digital	analogue
sum of non-linearity, non-repeatability and hysteresis	measuring range: – up to 10 m: ±3 mm – > 10 m: ± 0.03 % **for PA coated rope** measuring range: – up to 5 m: ±5 mm – > 5 m: ± 0.1 %	± 0.06 %
Offset / Zero	±4 mm	± 0.03 %

If the reference conditions are not met, the offset/zero arising from the mounting situation may be up to ±12 mm. This additional offset/zero can be compensated for by entering a correction (function "**offset**" **(057)**) during commissioning.

Differing from this , the following measuring error is present in the vicinity of the probe end:

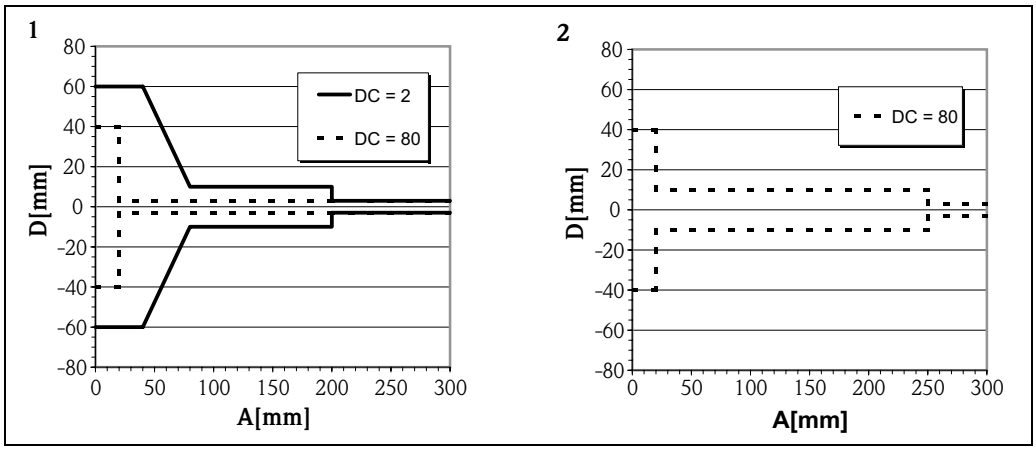

1 Rod and coax probe
2 Rope probe
A Distance from end of probe
D Sum of non-linearity, non-repeatability and hysteresis

Note!
Please reenter the blocking distance in the function group "**extended calibr.**" **(05)** function "**upper block.dist**" **(059)** when installing the device in a high nozzle:
upper blocking distance (UB) = nozzle height (H) + 50 mm.

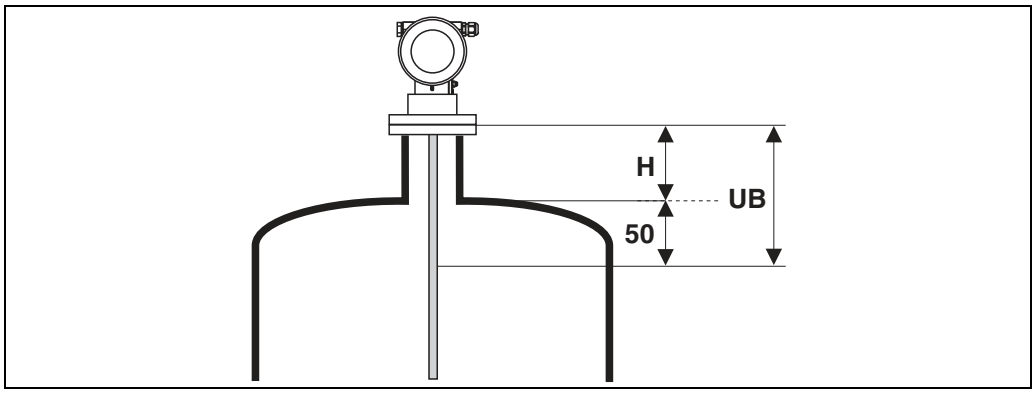

6.6 Envelope curve with VU331

After the basic setup, an evaluation of the measurement with the aid of the envelope curve ("**envelope curve**" **(0E)**) function group) is recommended.).

6.6.1 Function "plot settings" (0E1)

Here you can select which information is shown on the display:
- **envelope curve**
- substracted signal
- mapping

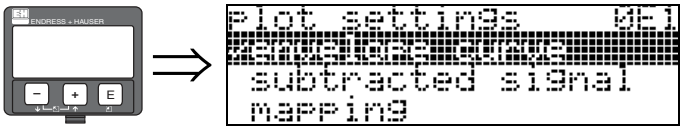

Note!
The interference echo suppression (map) are explained in BA00245F/00/EN "Description of Instrument Functions".

6.6.2 Function "recording curve" (0E2)

This function determines whether the envelope curve is read as
- **single curve** or
- cyclic



Note!
If the envelope curve mode is active on the display, the measured values are updated in a slower cycle time. Thus, it is advisable to leave the envelope curve mode after the measuring point has been optimised.

6.7 Function "envelope curve display" (0E3)

You can obtain the following information from the envelope curve display in this function:

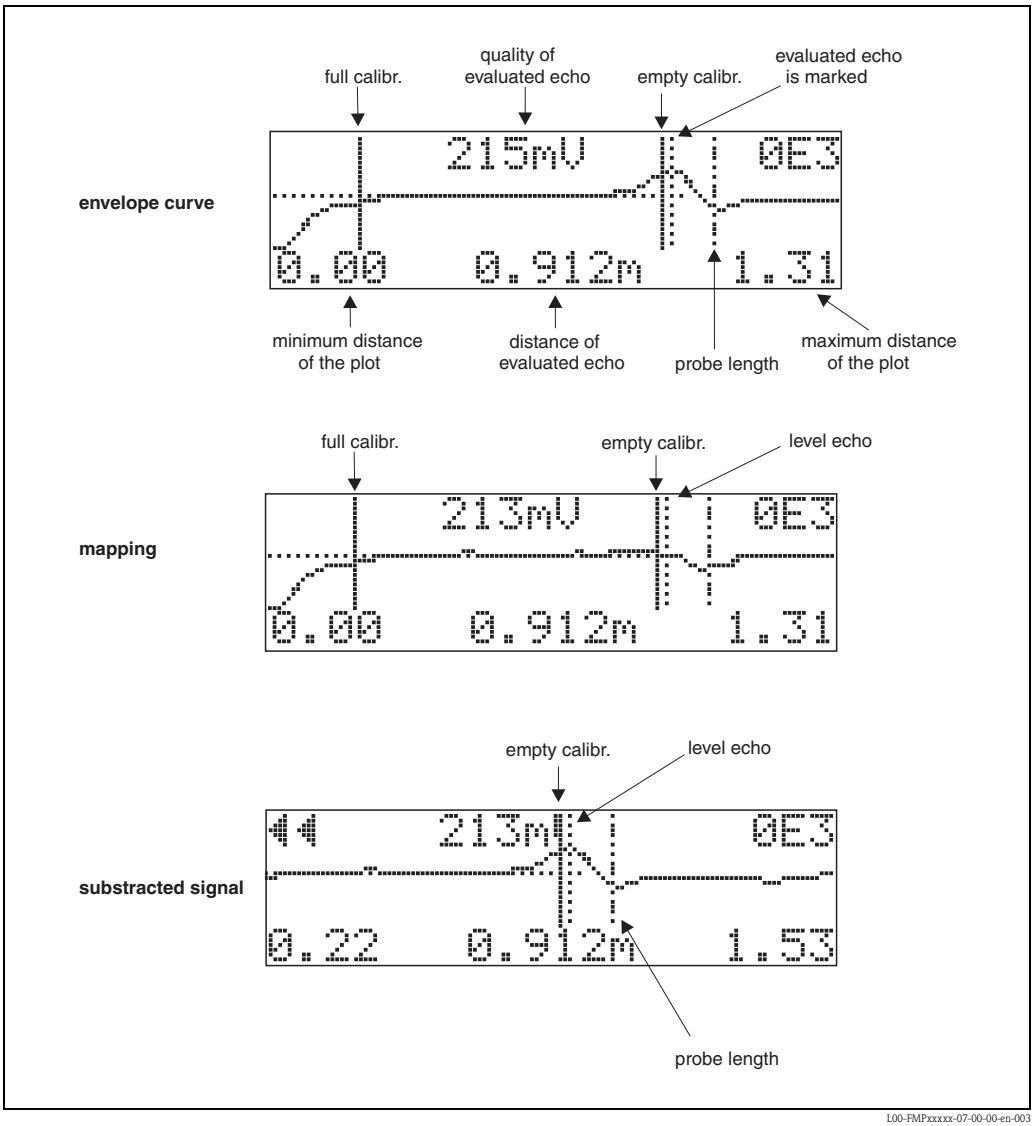

L00-FMPxxxxx-07-00-00-en-003

6.7.1 Envelope curve

The Levelflex emits individual pulses in quick succession and scans their reflection with a slightly variable delay. The energy values received are ordered by their time-of-flight. The graphic representation of this sequence is known as an "envelope curve".

6.7.2 Mapping (empty curve) and difference curve

To suppress interference signals, the envelope curve is not directly evaluated in the Levelflex.
The mapping (empty curve) is first subtracted from the envelope curve.
The system looks for level echoes in the resulting difference curve.
Difference curve = envelope curve – mapping (empty curve)
The mapping (empty curve) should be a good representation of the probe and the empty tank or silo. Ideally, only the signals from the medium being measured remain in the difference curve.

6.7.3 Mapping

- Factory mapping
  Mapping (empty curve) is already available in the device when the device is delivered.
- Customer mapping
  In a partially filled state, the distance up to 10 cm before the actual total level can be mapped (range of mapping = actual distance from total level – 10 cm), or values > LN can be mapped in the case of empty tanks.
- Dynamic mapping
  It is not static like factory and customer-specific interference echo suppression. Instead, it follows directly from static mapping and constantly adapts to the changing features of the probe environment during ongoing operation. Thus, dynamic mapping does not have to be recorded explicitly.

6.7.4 Echo threshold

Maximum points in the difference curve are only accepted as reflection signals if they are above a specified threshold. This threshold depends on the location and is automatically calculated from the ideal echo curve of the probe used. The calculation of the threshold in question depends on the "Installation" customer parameter in the extended calibration function.

6.7.5 Navigation in the envelope curve display

Using navigation, the envelope curve can be scaled horizontally and vertically and shifted to the left or the right. The active navigation mode is indicated by a symbol in the top left hand corner of the display.

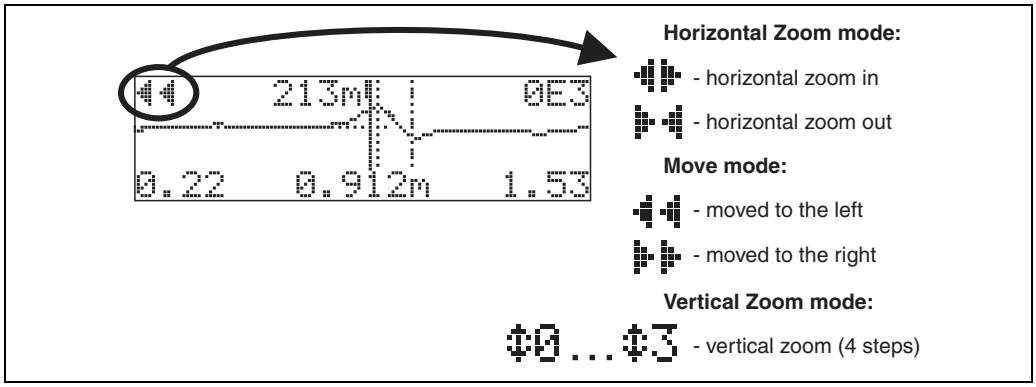

L00-FMPxxxxx-07-00-00-en-004

Horizontal-Zoom-Modus

Press [+] or [–], to switch to the envelope curve navigation. You are then in Horizontal Zoom mode. Either ◀▶ or ▶◀ is displayed.

You now have the following options:
- [+] increases the horizontal scale.
- [–] decreases the horizontal scale.

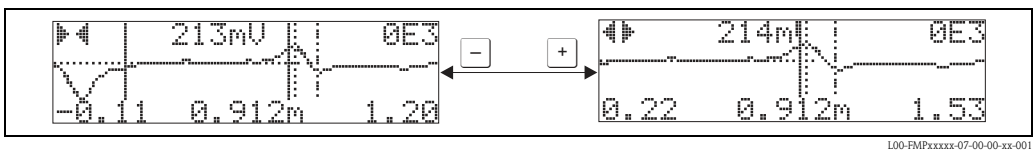

L00-FMPxxxxx-07-00-00-xx-001

Move-Modus

Then press [E], to switch to Move mode. Either ⊩⊩ or ⫞⫞ is displayed.

You now have the following options:
- [+] shifts the curve to the right.
- [–] shifts the curve to the left.

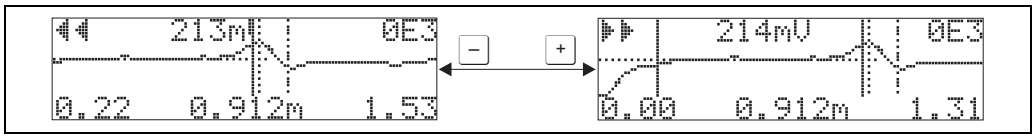

L00-FMPxxxxx-07-00-00-xx-002

Vertical-Zoom-Modus

Press [E], once more to switch to Vertical Zoom mode. ⇳1 is displayed.

You now have the following options:
- [+] increases the vertical scale.
- [–] decreases the vertical scale.

The display icon shows the current zoom factor (⇳0 to ⇳3).

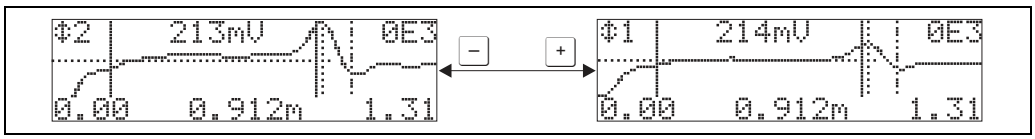

L00-FMPxxxxx-07-00-00-xx-003

Exiting the navigation

- Press [E] again to run through the different modes of the envelope curve navigation.
- Press [+] and [–] to exit the navigation. The set increases and shifts are retained. Only when you reactivate the "**recording curve**"**(0E2)** function does the Levelflex use the standard display again.

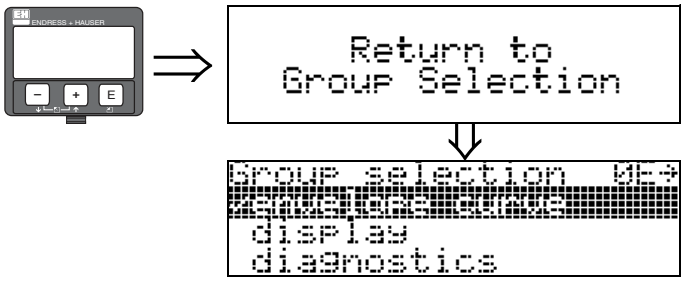

After 3 s, the following message appears

6.8 Basic setup with the Endress+Hauser operating program

To carry out the basic setup with the operating program, proceed as follows:
- Start the operating program and establish a connection.
- Select the **"basic setup"** function group in the navigation window.

The following display appears on the screen:

Basic setup step 1/6:
- Status image
- The TAG number can be entered.

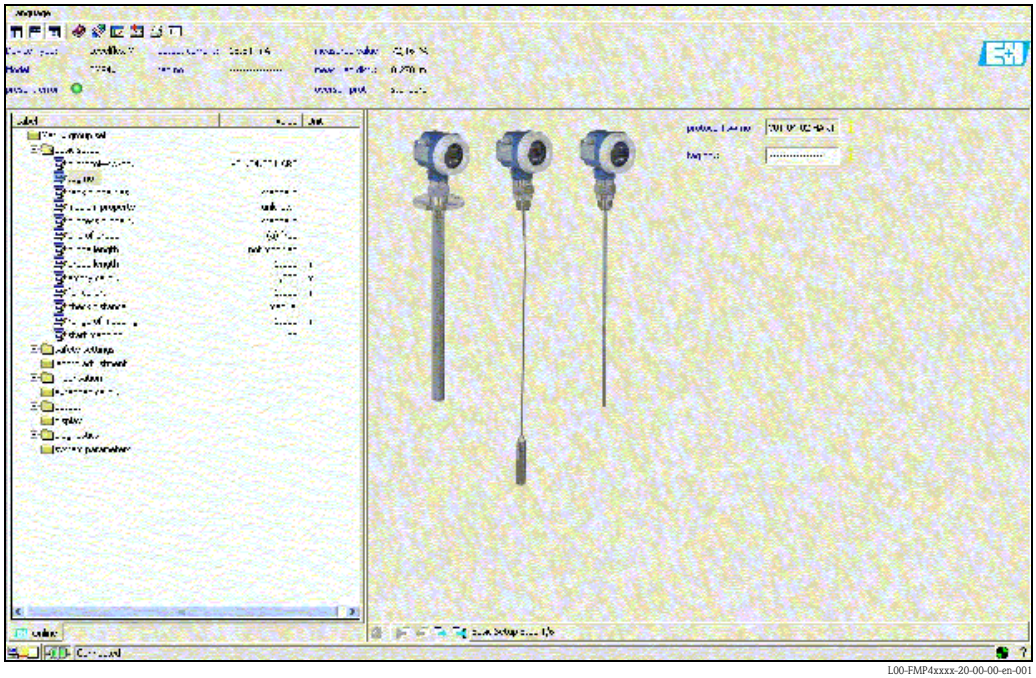

L00-FMP4xxxx-20-00-00-en-001

Note!
- Each parameter that is changed must be confirmed with the **RETURN** key!
- The "**Next**" button takes you to the next screen:

Basic setup step 2/6:

- Enter the application parameters (see chapter basic setup with "VU331"):
  - Tank properties
  - Medium properties
  - Process properties

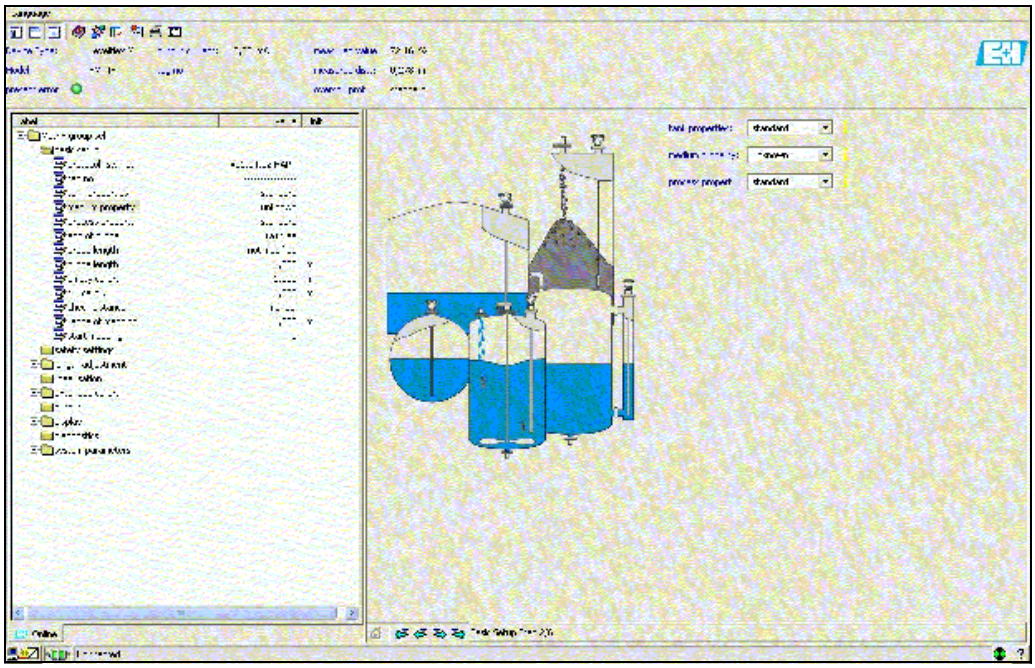

I00-fmp4xxxx-20-00-00-en-002

Basic setup step 3/6:

- Enter the application parameters (see chapter basic setup with "VU331"):
  - End of probe

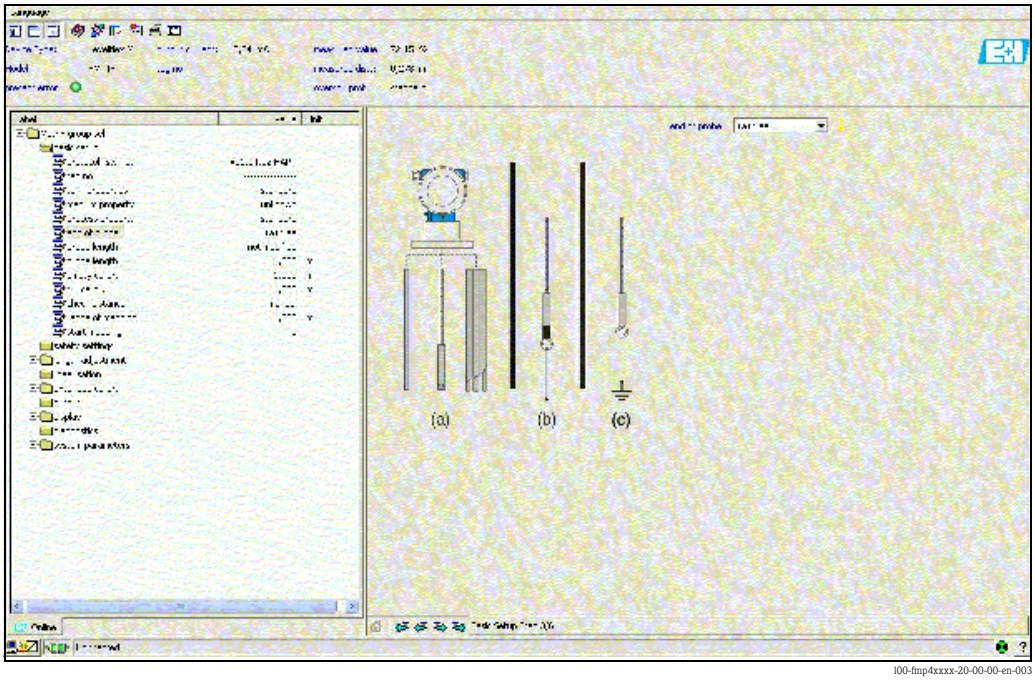

I00-fmp4xxxx-20-00-00-en-003

Basic setup step 4/6:

- Enter the application parameters (see chapter basic setup with "VU331"):
  - Probe length
  - Probe
  - Probe length
  - Determine length

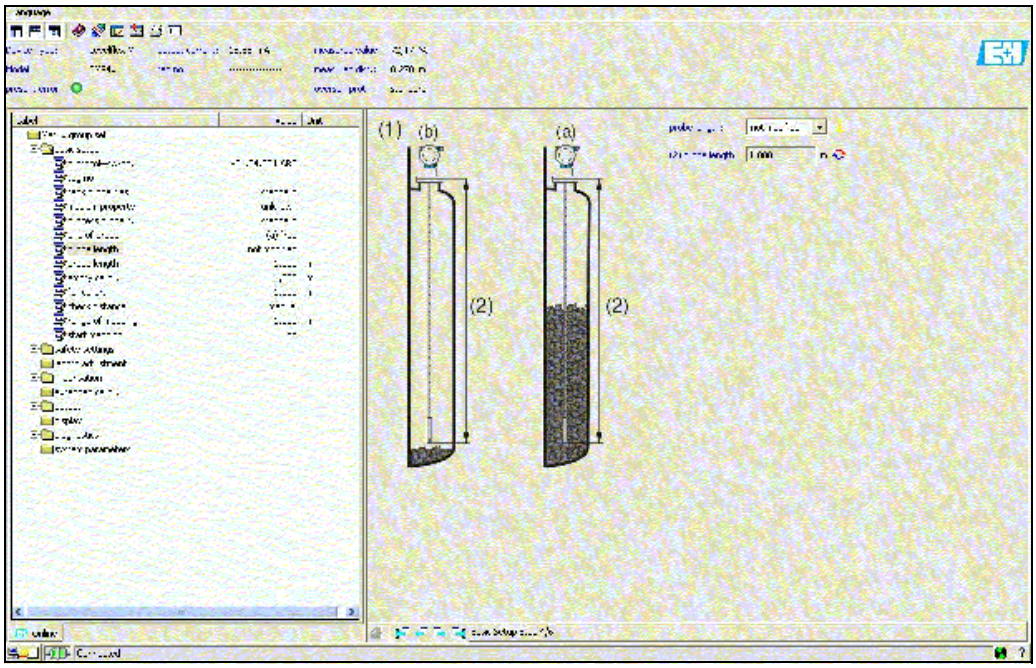

l00-fmp4xxxx-20-00-00-en-004

Basic setup step 5/6:

- Enter the application parameters (see chapter basic setup with "VU331"):
  - Empty calibration
  - Full calibration

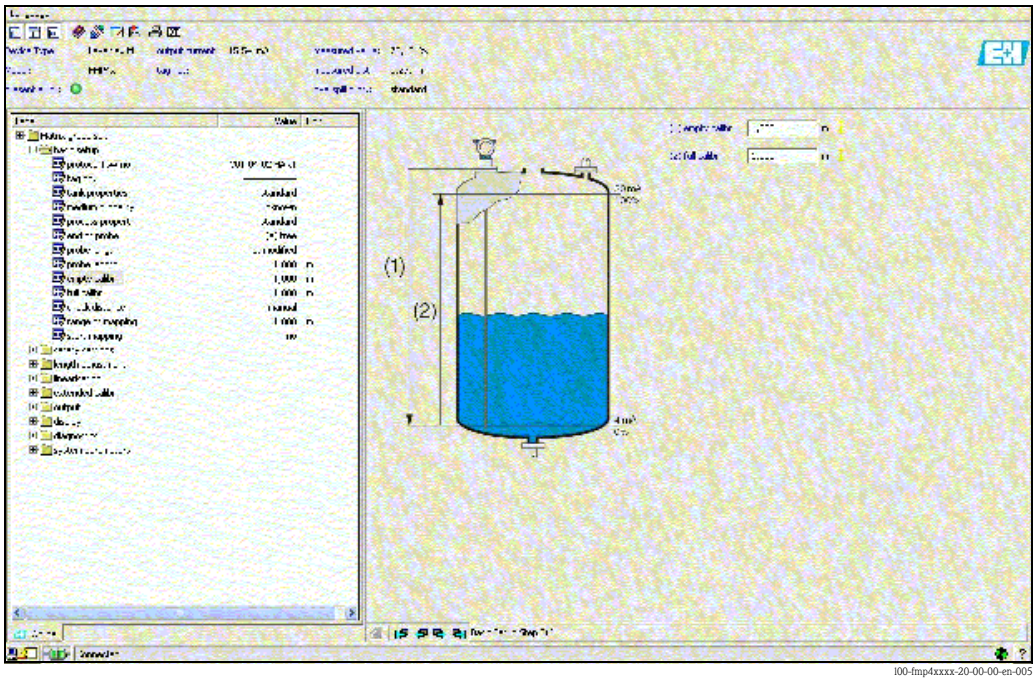

l00-fmp4xxxx-20-00-00-en-005

Basic setup step 6/6:
- Interference echo suppression takes place in this step
- The measured distance and the current measured value are always displayed in the header

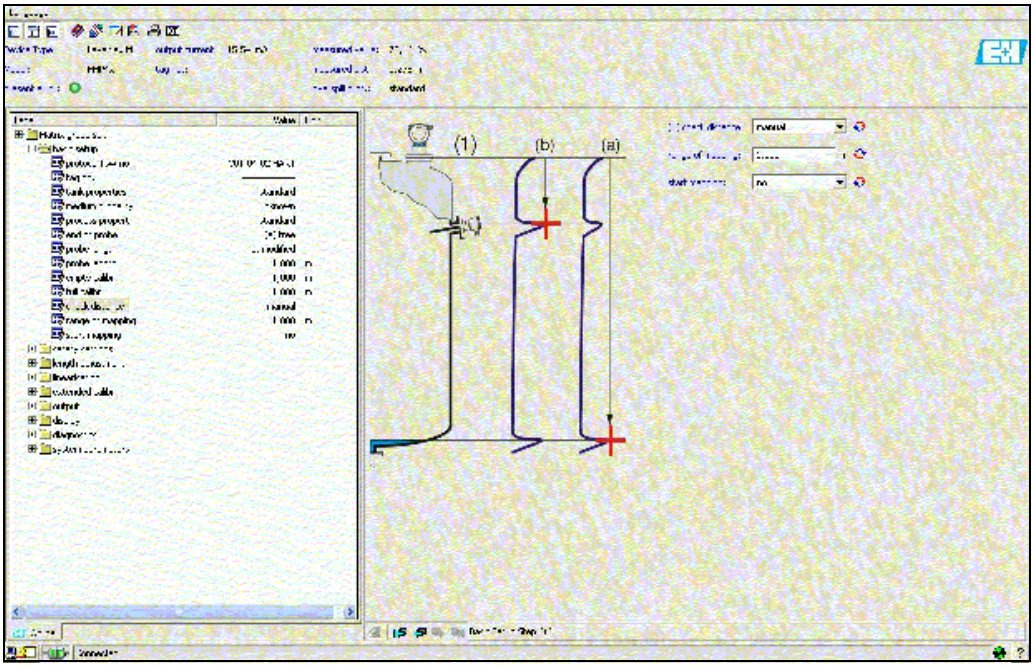

100-fmp4xxxx-20-00-00-en-006.gif

6.8.1 Signal analysis via envelope curve

After the basic setup, it is recommended to evaluate the measurement with the aid of the envelope curve.

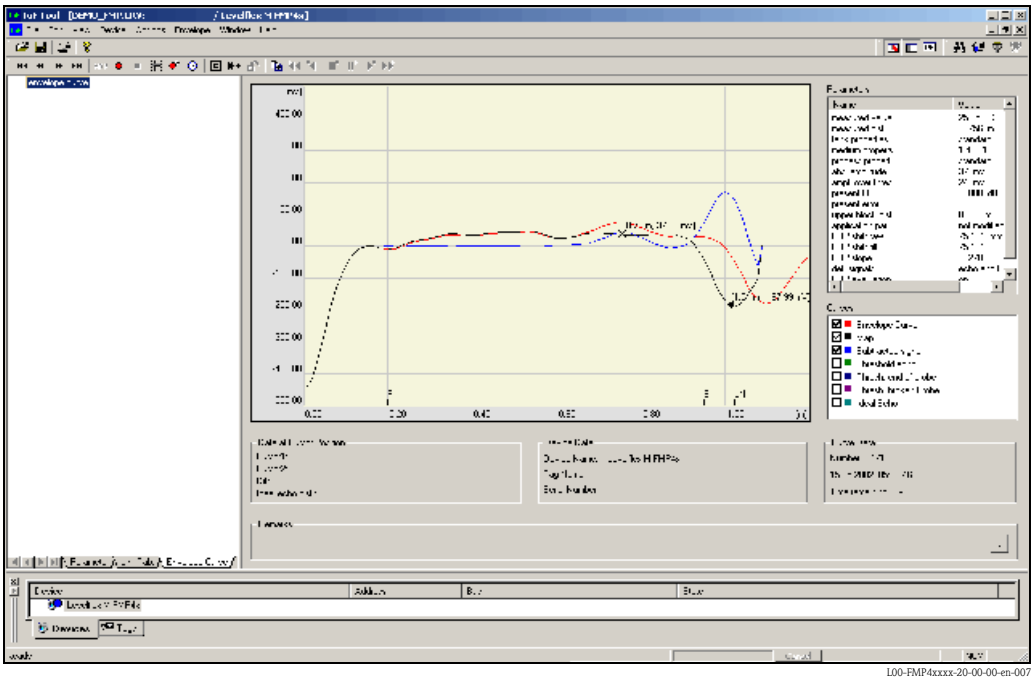
L00-FMP4xxxx-20-00-00-en-007

Note!
In the event of severe interference echoes, installing the Levelflex at another point can optimize the measurement routine.

Evaluating the measurement with the aid of the envelope curve

Typical curve shapes:

The following examples display typical curve shapes for a rope or rod probe in an empty tank. For all probe types, a negative probe end signal is shown. For rope probes, the end weight causes an additional preliminary positive echo (see rope probe diagram).

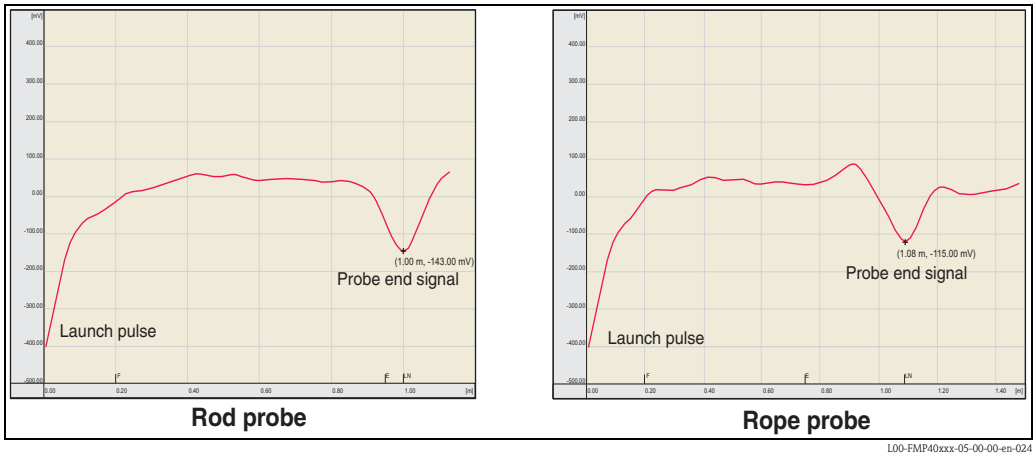

L00-FMP40xxx-05-00-00-en-024

Level echoes are indicated as positive signals in the envelope curve. Interference echoes can be both positive (e.g. reflections from internals) and negative (e.g. nozzles). The envelope curve, the map and the differential curve are used for the evaluation. Level echoes are searched for in the differential curve.

Evaluating the measurement:

- The map must correspond to the course of the envelope curve (for rod probes up to approx. 5 cm and for rope probes up to approx. 25 cm before the end of the probe) when the tank is empty.
- Amplitudes in the differential curve should be at a level of 0 mV when the tank is empty and lie within the span that is specified by the probe-specific blocking distances. In order to not detect any interference echoes, there must be no signals that exceed the echo threshold when the tank is empty.
- For partially-filled tanks, the map may only differ from the envelope curve at the position of the level echo. The level signal is then detected unequivocally as a positive signal in the differential curve. For detecting the level echo, the amplitude must lie above the echo threshold.

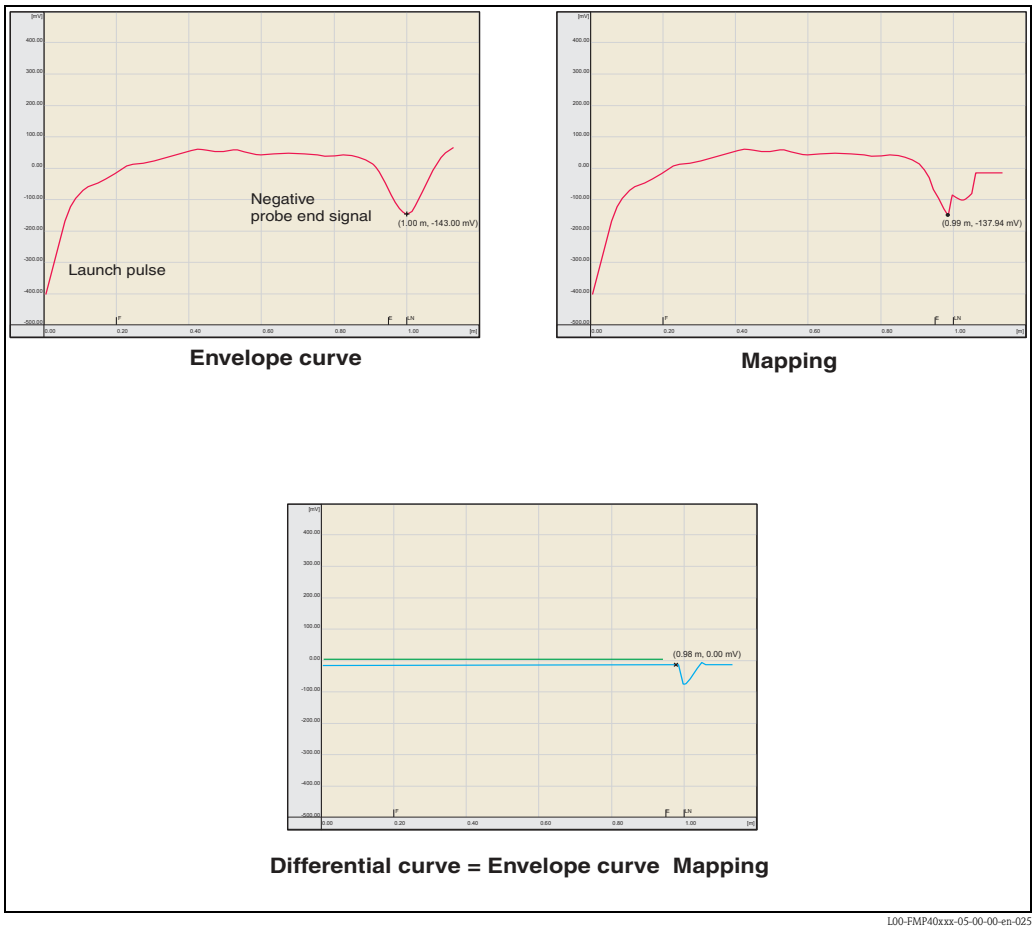

L00-FMP40xxx-05-00-00-en-025

6.8.2 User-specific applications (operation)

For details of setting the parameters of user-specific applications, see separate documentation BA00245F/00/EN "Description of Instrument Functions" on the enclosed CD-ROM.

7 Maintenance

The Levelflex M measuring device requires no special maintenance.

7.1 Exterior cleaning

When cleaning the Levelflex M , always use cleaning agents that do not attack the surface of the housing and the seals.

7.2 Repairs

The Endress+Hauser repair concept assumes that the measuring devices have a modular design and that customers are able to undertake repairs themselves ("Spare Parts", Page 75). Please contact Endress+Hauser Service for further information on service and spare parts.

7.3 Repairs to Ex-approved devices

When carrying out repairs to Ex-approved devices, please note the following:
- Repairs to Ex-approved devices may only be carried out by trained personnel or by Endress+Hauser Service.
- Comply with the prevailing standards, national Ex-area regulations, safety instructions (XA) and certificates.
- Only use original spare parts from Endress+Hauser.
- When ordering a spare part, please note the device designation on the nameplate. Only replace parts with identical parts.
- Carry out repairs according to the instructions. On completion of repairs, carry our the specified routine test on the device.
- Only Endress+Hauser Service may convert a certified device into a different certified variant.
- Document all repair work and conversions.

7.4 Replacement

After a complete Levelflex M or electronic module has been replaced, the parameters can be downloaded into the device again via the communication interface.
Prerequisite to this is that the data were uploaded to the PC beforehand using the FieldCare.
Measurement can continue without having to carry out a new setup.

- You may have to activate linearisation (see BA00245F/00/EN on the enclosed CD-ROM.)
- You may need to record the tank map again (see Basic Setup)

After an probe or electronic has been replaced, a new calibration must be carried out. This is described in the repair instructions.

8 Accessories

Various accessories, which can be ordered separately from Endress+Hauser, are available for the Levelflex M.

8.1 Weather protection cover

A Weather protection cover made of stainless steel is recommended for outdoor mounting (order code: 543199-0001). The shipment includes the protective cover and tension clamp.

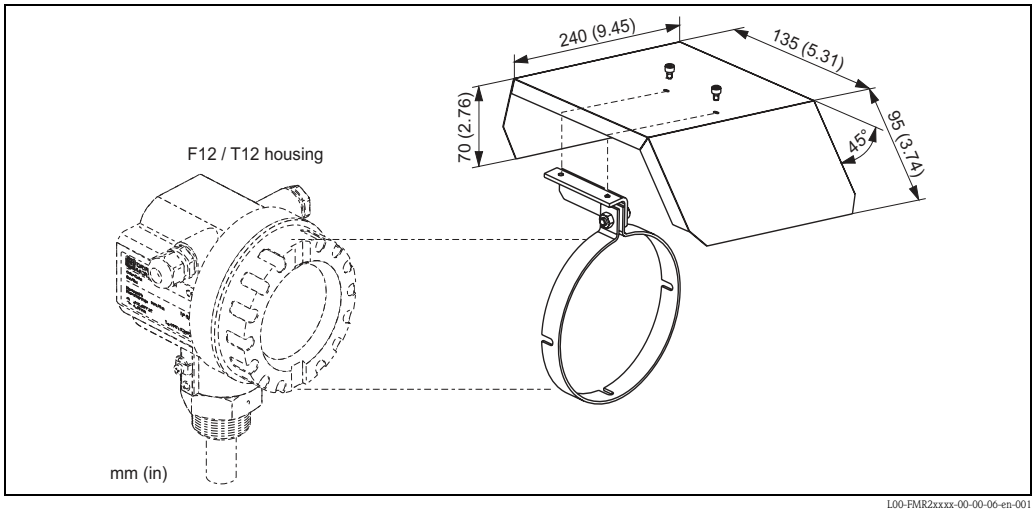

8.2 Mounting-kit isolated

Mounting-kit	Order-No.
for 4mm rope probe	52014249
for 6mm rope probe	52014250

If a rope probe has to be fixed and a secure grounded mounting is not possible, we recommend using the insulating sleeve made of PEEK GF-30 with accompanying DIN 580 eye-bolt made of stainless steel.
Max. process temp. 150 °C.

Due to the risk of electrostatic charge, the insulating sleeve is not suitable for use in hazardous areas. In these cases the fixing must be reliably grounded (→ 🖹 21).

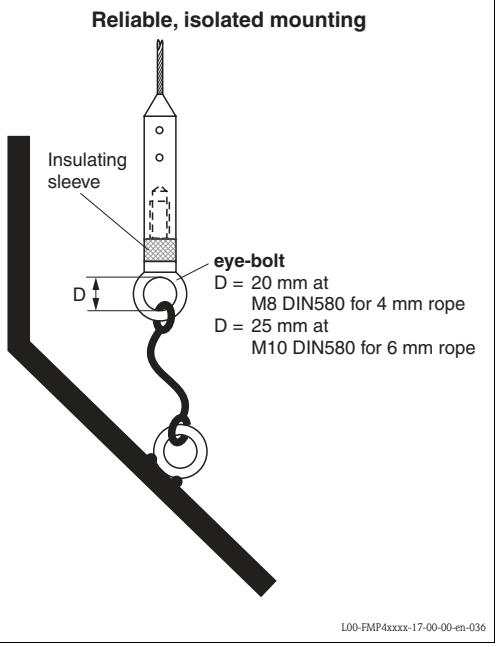

8.3 Remote display and operation FHX40

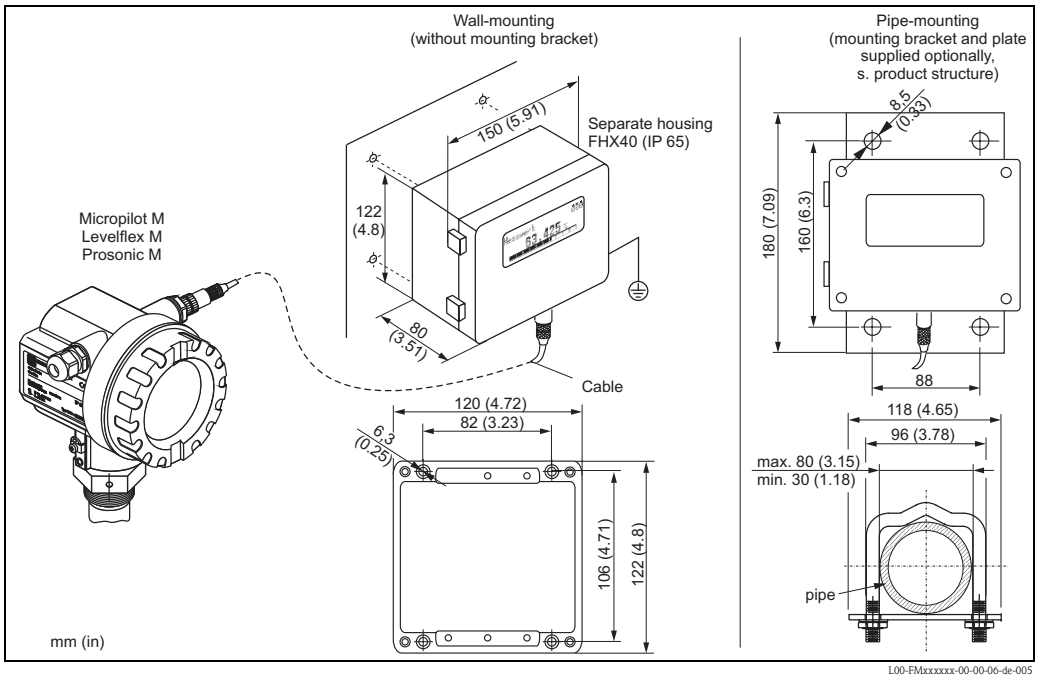

L00-FMxxxxxx-00-00-06-de-005

Technical data (cable and housing) and product structure:

Max. cable length	20 m (65 ft)
Temperature range	-30 °C to +70 °C (-22 °F to +158 °F)
Degree of protection	IP65/67 (housing); IP68 (cable) acc. to IEC 60529
Materials	Housing: AlSi12; cable glands: nickle plated brass
Dimensions [mm (in)]	122x150x80 (4.8x5.9x3.2) / HxWxD

010	**Approval:**				
	A	Non-hazardous area			
	2	ATEX II 2G Ex ia IIC T6			
	3	ATEX II 2D Ex ia IIIC T80°C			
	G	IECEx Zone1 Ex ia IIC T6/T5			
	S	FM IS Cl. I Div.1 Gr. A-D, zone 0			
	U	CSA IS Cl. I Div.1 Gr. A-D, zone 0			
	N	CSA General Purpose			
	K	TIIS Ex ia IIC T6			
	C	NEPSI Ex ia IIC T6/T5			
	Y	Special version, TSP-No. to be spec.			
020		**Cable:**			
		1	20m / 65ft (> for HART)		
		5	20m / 65ft (> for PROFIBUS PA/FOUNDATION Fieldbus)		
		9	Special version, TSP-No. to be spec.		
030			**Additional option:**		
			A	Basic version	
			B	Mounting bracket, pipe 1"/ 2"	
			Y	Special version, TSP-No. to be spec.	
FHX40 -					Complete product designation

For connection of the remote display FHX40 use the cable which fits the communication version of the respective device.

8.4 Centering disks

If the probes with rod version are used in stilling well or bypass, it must be ensured that the probe does not come into contact with the wall. The centering disk fixes the rod probe in the middle of the pipe.

8.4.1 Centering disk PEEK Ø1.89 - 3.74 inch

The centering disk is suitable for probes with a rod diameter of Ø 0.63in and can be used in pipes from DN40 (1½") up to DN100 (4"). Markings on the 4-leg centering disk ensure a simple tailoring. Hence the centering disk can be adapted to the pipe diameter.
See also Operating Instruction BA00377F/00/A2.

- PEEK (statically dissipative)
- Measuring range: –60 °C to +200 °C

Order-no. 71069064

Note!
If the centering disk is inserted in an bypass, it must be positioned below the lower bypass outlet. The has to be accounted for when choosing the probe length.
Generally, the centering disk should not be mounted higher than 50 mm from the probe end.
It is recommended not to insert the PEEK centering disk in the measuring range of the rod probe.

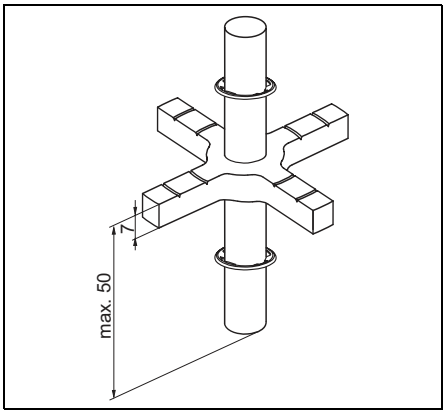

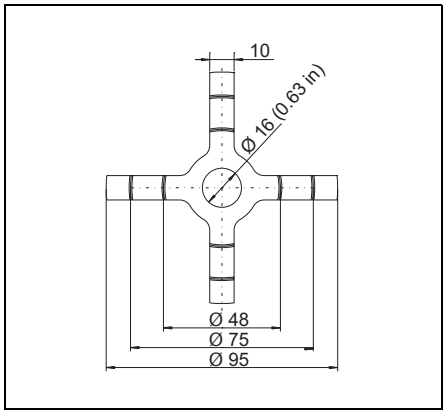

8.4.2 Centering disk PFA Ø1.46 inch

The centering disk is suitable for probes with a rod diameter of 0.63 inch (also coated rod probes) and can be used in pipes from DN40 (1½") upto DN50 (2").
See also Operating Instruction BA00378F/00/A2.

- Measuring range.: -200 °C to +150 °C

Order-no. 71069065

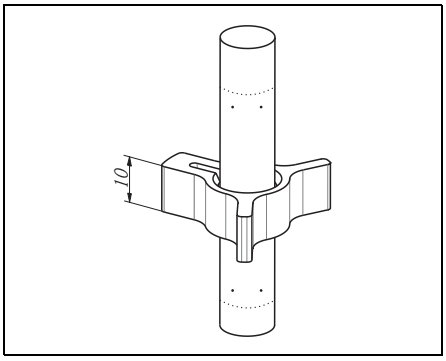

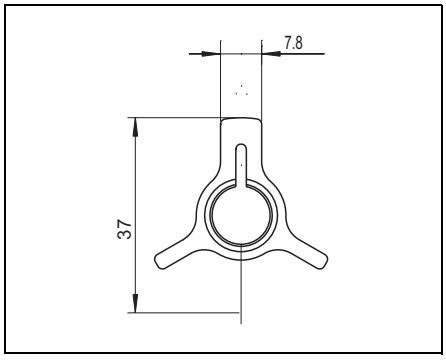

8.5 Commubox FXA195 HART

For intrinsically safe communication with FieldCare via the USB interface.
For details refer to TI00404F/00/EN.

8.6 Commubox FXA291

The Commubox FXA291 connects Endress+Hauser field devices with CDI interface (= Endress+Hauser Common Data Interface) to the USB interface of a personal computer or a notebook. For details refer to TI00405C/07/EN.



Note!
For the device you need the "ToF Adapter FXA291" as an additional accessory.

8.7 ToF Adapter FXA291

The ToF Adapter FXA291 connects the Commubox FXA291 via the USB interface of a personal computer or a notebook to the device. For details refer to KA00271F/00/A2.

8.8 Special process connection

8.8.1 Fisher flange 249B/259B (MVTF N0123)

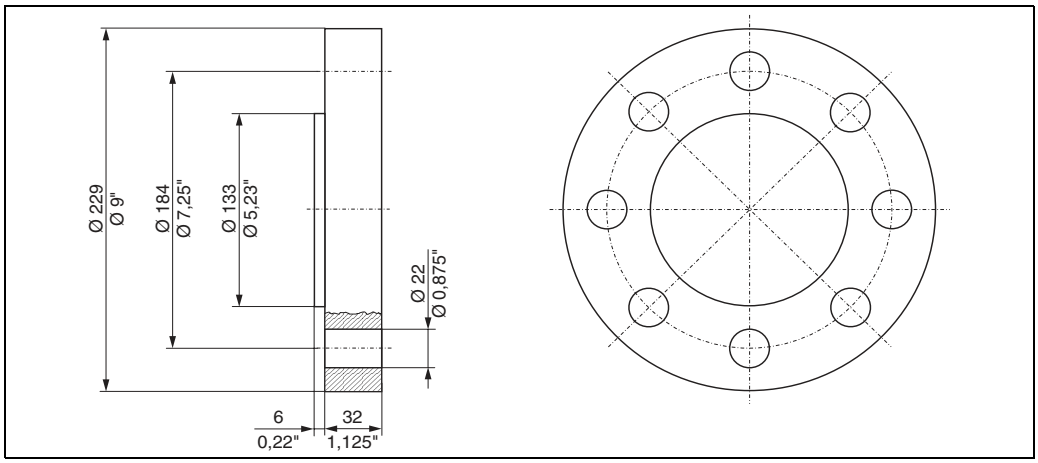

L00-FMP45xxx-00-00-06-en-001

8.8.2 Fisher flange 249C (MVTF N0124)

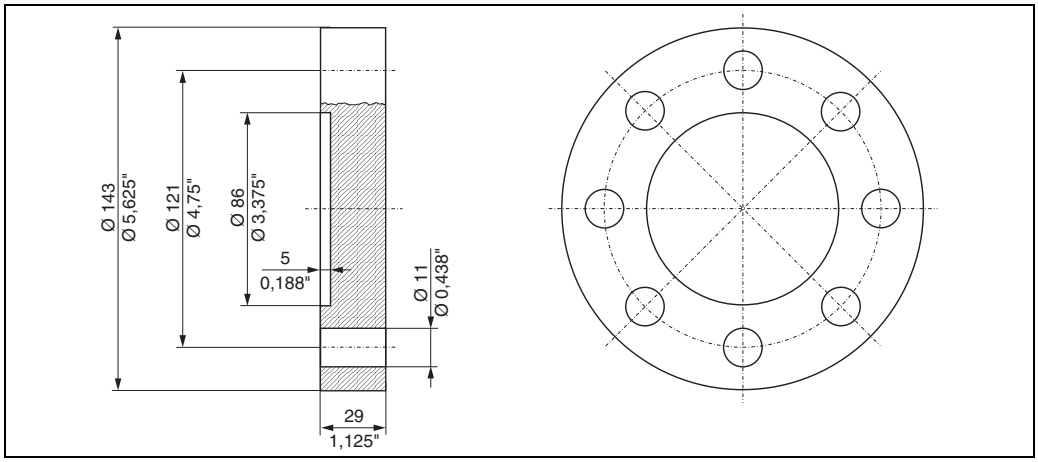

L00-FMP45xxx-00-00-06-en-002

8.8.3 Masoneillan flange (MVTF N0125)

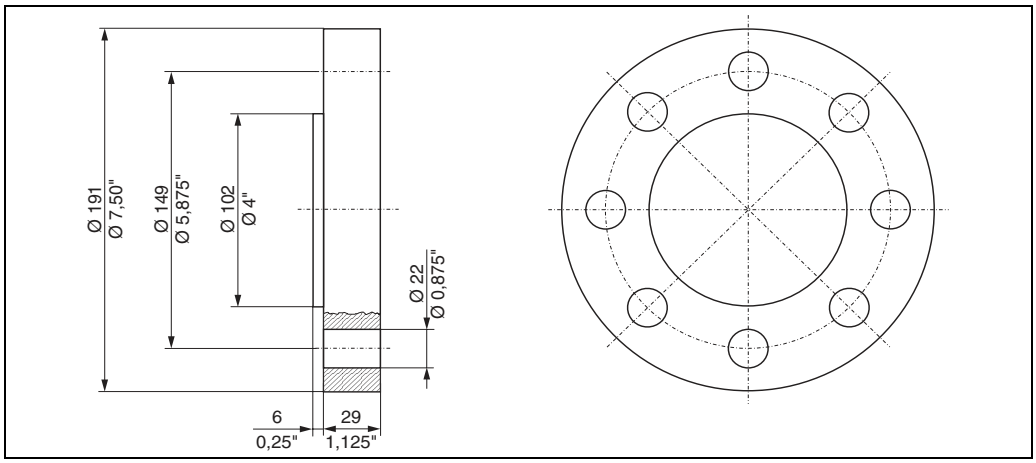

L00-FMP45xxx-00-00-06-en-003

9 Trouble-shooting

9.1 Trouble-shooting instructions

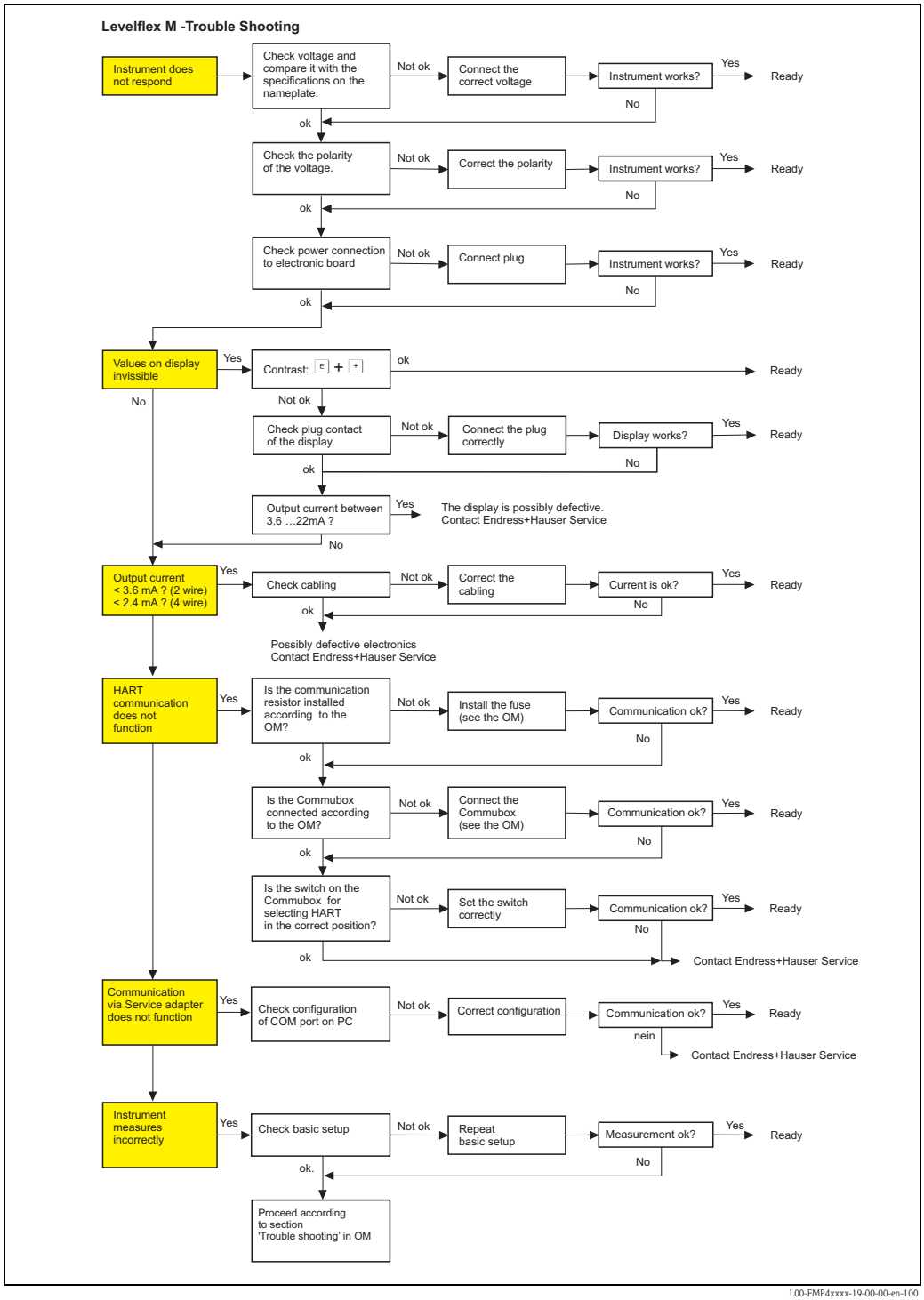

L00-FMP4xxxx-19-00-00-en-100

9.2 System error messages

Code	Description	Possible cause	Remedy
A102	checksum error general reset & new calibr. required	device has been powered off before data could be stored; emc problem; EEPROM defect	reset avoid emc problem; if alarm prevails after reset, exchange electronics
W103	initialising - please wait	EEPROM storage not yet finished	wait some seconds; if warning prevails, exchange electronics
A106	downloading please wait	processing data download	wait until warning disappears
A110	checksum error general reset & new calibr. required.	device has been powered off before data could be stored; emc problem; EEPROM defect	reset avoid emc problem; if alarm prevails after reset, exchange electronics
A111	electronics defect	RAM defective	reset if alarm prevails after reset, exchange electronics
A113	electronics defect	ROM defective	reset if alarm prevails after reset, exchange electronics
A114	electronics defect	EEPROM defective	reset if alarm prevails after reset, exchange electronics
A115	electronics defect	general hardware problem	Reset if alarm prevails after reset, exchange electronics
A116	download error repeat download	checksum of stored data not correct	restart download of data
A121	electronics defect	no factory calibration existant; EEPROM defective	contact service
W153	initialising - please wait	initialisation of electronics	wait some seconds; if warning prevails, power off device and power on again
A160	checksum error general reset & new calibr. required.	device has been powered off before data could be stored; emc problem; EEPROM defect	reset avoid emc problem; if alarm prevails after reset, exchange electronics
A164	electronics defect	hardware problem	reset if alarm prevails after reset, exchange electronics
A171	electronics defect	hardware problem	reset if alarm prevails after reset, exchange electronics
A221	Probe pulse deviation from average values	HF module or cable between HF module and electronics defective	Check contacts on HF module If fault cannot be eliminated: Replace HF module
A241	Broken probe	Broken probe orvalue for probe length is too long	Check the probe length in 033, Check the probe itself,if the probe is broken, change the probe, or change to a non contact system
		Probe break monitoring enabled without mapping beforehand	Disable probe break monitoring, perform mapping and then reactivate probe break monitoring

Code	Description	Possible cause	Remedy
A251	Feedthrough	Lost contact in the process feedthrough	Replace process feedtrough
A261	HF cable defective	HF cable defective or HF connector removed	Check HF connector, replace cable if defective
W275	Offset too high	Temperature at the electronics too high or HF module defective	Check temperature, replace HF module if defective
W512	recording of mapping please wait	mapping active	wait some seconds until alarm disappears
W601	linearisation ch1 curve not monotone	linearization not monotonously increasing	correct linearisation table
W611	less than 2 linearisation points for channel 1	number of entered linearization points < 2	correct linearisation table
W621	simulation ch. 1 on	simulation mode is active	switch off simulation mode
E641	no usable echo channel 1 check calibr.	echo lost due to application conditions of built up on antenna	check installation; clean probe (cf. Operating Instructions)
W650	Signal/noise ratio too low or no echo	noise on signal to high	eliminate electromagnetic interference
E651	level in safety distance - risk of overspill	level in safety distance	alarm will disappear as soon as level leaves safety distance
A671	linearisation ch1 not complete, not usable	linearisation table is in edit mode	activate linearisation table
W681	current ch1 out of range	current out of range (3.8 mA to 20,5 mA)	check calibration and linearisation

9.3 Application errors

Error	Output	Possible cause		Remedy
A warning or alarm has occurred	Depending on the configuration	See table of error messages (see Page 71)		1. See table of error messages (see Page 71)
Measured value (00) is incorrect	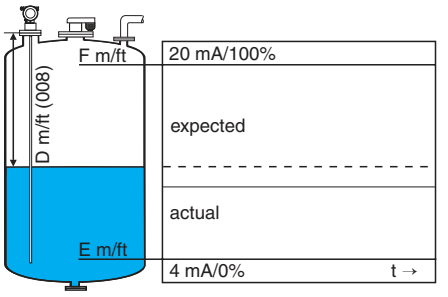	Measured distance (008) OK?	yes →	1. Check empty calibr. (005) and full calibr. (006) 2. Check linearisation: → level/ullage (040) → max. scale (046) → diameter vessel (047) → Check table
		no ↓		
		An interference echo may have been evaluated.	yes →	1. Carry out tank mapping → basic setup
No change off measured value on filling/emptying	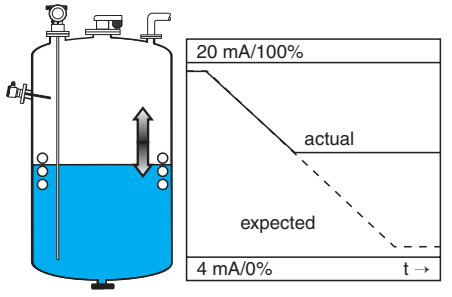	Interference echo from installations, nozzle or extension on the probe		1. Carry out tank mapping → basic setup 2. If necessary, clean probe 3. If necessary, select better mounting position
E641 (loss of echo) after turn on the power supply	**If the device is configured to Hold by loss of echo the output is set to any value/current.**	noise level during the initialisation phase to high.		Repeat once more empty calibr. (005). Caution! Before conformation change with + or − to the edit mode.

Error	Output	Possible cause	Remedy
Device displays a level when the tank is empty.	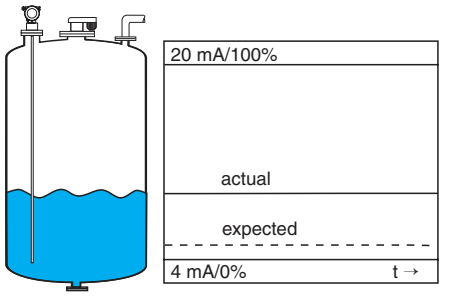	Incorrect probe length	1. Carry out automatic probe length detection when the tank is empty. 2. Carry out mapping over entire probe when the tank is empty (probe free!).
Measured value incorrect (slope error in the entire measuring range)	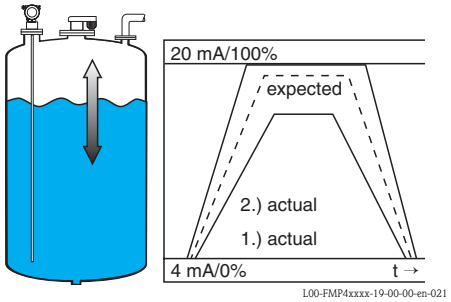	Tank properties incorrect. Medium properties incorrect.	LN < 4 m and "Aluminium tank" tank properties selected → Calibration not possible. → Selection → Select standard → Thresholds too high Select lower medium properties.

9.4 Spare Parts

An overview of the spare parts for your device is available in the internet at www.endress.com. To obtain information on the spare parts, proceed as follows:

1. Go to "www.endress.com" and select your country.
2. Click "Instruments".

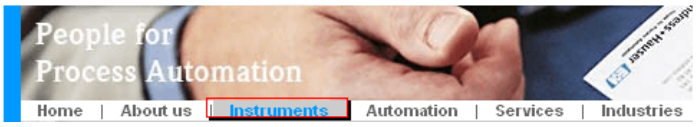

3. Enter the product name into the "product name" field.

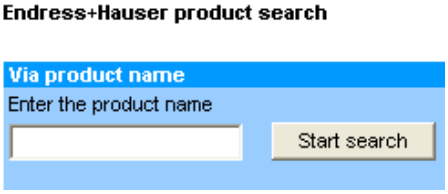

4. Select the device.
5. Click the "Accessories/Spare parts" tab.

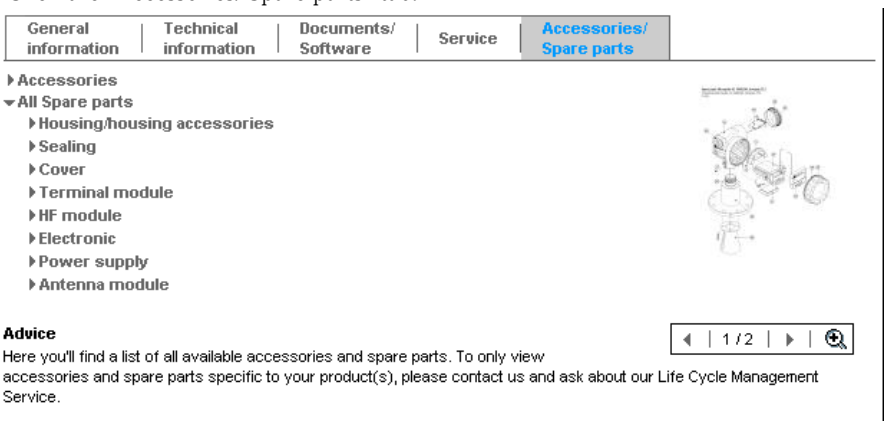

6. Select the required spare parts (You may also use the overview drawing on the right side of the screen.)

When ordering spare parts, always quote the serial number indicated on the nameplate. As far as necessary, the spare parts also include replacement instructions.

9.5 Return

The following procedures must be carried out before a transmitter is sent to Endress+Hauser e.g. for repair or calibration:

- Remove all residue which may be present. Pay special attention to the gasket grooves and crevices where fluid may be present. This is especially important if the fluid is dangerous to health, e.g. corrosive, poisonous, carcinogenic, radioactive, etc.
- Always enclose a duly completed "Declaration of contamination" form (a copy of the "Declaration of contamination" is included at the end of this operating manual).
  Only then can Endress +Hauser transport, examine and repair a returned device.
- Enclose special handling instructions if necessary, for example a safety data sheet as per EN 91/155/EEC.

Additionally specify:

- An exact description of the application
- The chemical and physical characteristics of the product
- A short description of the error that occurred (specify error code if possible)
- If necessary, give the error code

9.6 Disposal

In case of disposal please seperate the different components according to their material consistence.

9.7 Software history

Date	Software version	Software modifications	Documentation	Description of Device Functions
08.2003	01.02.02	Original software. Operated via: – ToF Tool – Commuwin II (as of Version 2.08-1 Update C) – HART-Communicator DXR375 with Rev. 1, DD 1.	BA279F/00/en/03.04 52021039 BA279F/00/en/04.04 52021039	——
07.2004	01.02.04	▪ "mapping" function improved	BA279F/00/en/06.04 52021039 BA279F/00/en/01.06 52021039	BA245F/00/en/06.04 52011936 BA245F/00/en/01.06 52011936
01.2005	01.02.06	Function "echo lost" improved	——	——
03.2006	01.04.00	▪ function "detection window"	BA279F/00/en/05.06 52021039 BA279F/00/en/11.06 52021039 BA279F/00/en/12.06 52021039	BA245F/00/en/06.06 52011936 BA245F/00/DE/07.07 71040943
04.2007	01.04.02	Improved echo detection with completely flooded bypasses	BA279F/00/en/03.09 71074807 BA00279F/00/EN/13.10 71120320 BA00279F/00/EN/14.11 71134031 BA00279F/00/EN/15.11 71154965	

9.8 Contact addresses of Endress+Hauser

Contact addresses can be found on our homepage: www.endress.com/worldwide. If you have any questions, please do not hesitate to contact your Endress+Hauser representative.

10 Technical data

10.1 Additional technical data

10.1.1 Input

Measured variable	The measured variable is the distance between a reference point (see Fig., see Page 12) and the product surface. Subject to the input empty distance "E", the level is calculated. Alternatively, the level can be converted by means of linearisation (32 points) into other variables (volume, mass).

10.1.2 Output

Output signal	4 to 20 mA (invertible) with HART protocol
Signal on alarm	Error information can be accessed via the following interfaces: ■ Local display: – Error symbol (see Page 33) – Plain text display ■ Current output, signal on error can be selected (e.g. according to NAMUR recommendation NE43) ■ Digital interface
Linearization	The linearization function of the Levelflex M allows the conversion of the measured value into any unit of length or volume units and mass or %. Linearization tables for volume calculation in cylindrical tanks are preprogrammed. Any other tables from up to 32 value pairs can be entered manually or semi-automatically. The creation of a linearization table with FieldCare is particularly convenient.

10.1.3 Performance characteristics

Reference operating conditions	■ Temperature = +20 °C (68 °F) ±5 °C (9 °F) ■ Pressure = 1013 mbar abs. (14.7 psia) ±20 mbar (0.3 psi) ■ Humidity = 65 % ±20 % ■ Reflection factor ≥ 0.8 (surface of the water for coax probe, metal plate for rod and rope probe with min. 1 m ∅) ■ Flange for rod or rope probe ≥ 30 cm ∅ ■ Distance to obstructions ≥ 1 m
Maximum measured error	Is in Function group "basic setup" (00), Page 43.
Resolution	■ Digital: 1 mm ■ Analog: 0.03 % of the measuring range
Reaction time	The reaction time is dependent on the configuration. Shortest time: ■ 2-wire electronics: 1 s ■ 4-wire electronics: 0.7 s

Influence of ambiente temperature

The measurements are carried out in accordance with EN 61298-3:
- digital output:
  - average T_K: 0.6 mm/10 K, max. ±3.5 mm over the entire temperature range -40 °C to +80 °C.

2-wire
- Current output (additional error, in reference to the span of 16 mA):
  - **Zero point (4 mA)**
    average T_K: 0.032 %/10 K, max. 0.35 % over the entire temperature range -40 °C to +80 °C.
  - **Span (20 mA)**
    average T_K: 0.05 %/10 K, max. 0.5 % over the entire temperature range -40 °C to +80 °C.

4-wire
- Current output (additional error, in reference to the span of 16 mA):
  - **Zero point (4 mA)**
    average T_K: 0.02 %/10 K, max. 0.29 % over the entire temperature range -40 °C to +80 °C.
  - **Span (20 mA)**
    average T_K: 0.06 %/10 K, max. 0.89 % over the entire temperature range -40 °C to +80 °C.

Influence of gaslayer

High pressures reduce the propagation velocity of the measuring signals in the gas/vapor above the fluid. This effect depends on the kind of gas/vapor and of its temperature. This results in a measuring error that gets bigger as the distance increases between the device zero point (flange) and product surface. The following table illustrates this measured error for a few typical gases/vapors (with regard to the distance; a positive value means that too large a distance is being measured):

Gaslayer	Temperature		Pressure					
	°C	°F	1 bar (14.5 psi)	10 bar (145 psi)	50 bar (725 psi)	100 bar (1450 psi)	200 bar (2900 psi)	400 bar (5801 psi)
Air	20	68	0,00 %	0,22 %	1,2 %	2,4 %	4,9 %	9,5 %
	200	392	-0,01 %	0,13 %	0,74 %	1,5 %	3,0 %	6,0 %
	400	752	-0,02 %	0,08 %	0,52 %	1,1 %	2,1 %	4,2 %
Hydrogen	20	68	-0,01 %	0,10 %	0,61 %	1,2 %	2,5 %	4,9 %
	200	392	-0,02 %	0,05 %	0,37 %	0,76 %	1,6 %	3,1 %
	400	752	-0,02 %	0,03 %	0,25 %	0,53 %	1,1 %	2,2 %

Gaslayer	Temperature		Pressure				
	°C	°F	1 bar (14.5 psi)	10 bar (145 psi)	50 bar (725 psi)	100 bar (1450 psi)	200 bar (2900 psi)
Water (saturated steam)	100	212	0,20 %	-	-	-	-
	180	356	-	2,10 %	-	-	-
	263	507	-	-	8,6 %	-	-
	310	592	-	-	-	22,0 %	-
	364	691	-	-	-	-	58 %

Installing FMP45 with Gasphase Compensation (Coax only)

Application

For level measurement in steam applicatioins at high presures and temperatures.
At high pressures and temperatures, the speed at which microwave signals are propagated in steam (polare media) is reduced above the liquid being measured. Automatic gas phase compensation allows this physical effect to be corrected from a measurement technology point of view.
The accuracy of measurement is the higher the larger the reference Lref and the smaller the measuring range is:

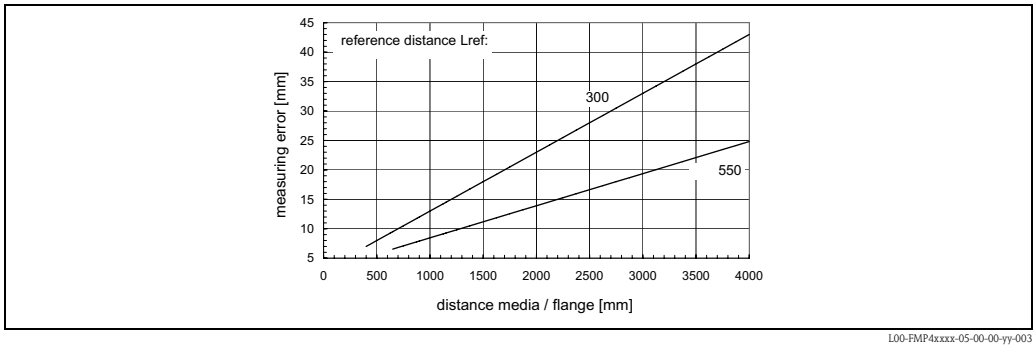

L00-FMP4xxxx-05-00-00-yy-003

If there are fast changes in pressure, there may be an additional error, since the measured reference distance is filtered with twice the time constant of the level measurement.
In addition, condition of imbalance (e.g. due to heating) may cause density and pressure gradients within the medium and condensation of steam at the probe. As a result, the level readings at different locations inside the tank may very slightly.
Caused by this application influences the measuring error may be increased by a factor up to 2 to 3.

Note!
Coax probes with reference reflection can be installed in any tank (free in the tank or into a bypass). Coax probes are completely mounted and adjusted ex work. After mounting they are ready for use, additional settings are not necessary.

Installation

This version of Levelflex M generates a reference reflection in the distance Lref from the flange (→ 🖹 6 "Ordering structure" option U: 300 mm/11"; option V: 550 mm/21"). The reference reflection must be at least 150 mm above the highest level. By means of the shift of the reference reflection the actual propagation speed is measured and the level value will be automatically corrected.

Limitations for coax probes

Maximum probe length LN	LN ≤ 4000 mm
Minimum probe length LN	LN > Lref + 200 mm
Reference distance Lref	300 mm / 550 mm
Maximum level relative to sealing surface of flange:	Lref + 150 mm
Minimum DC-value of medium:	$D_C > 7$

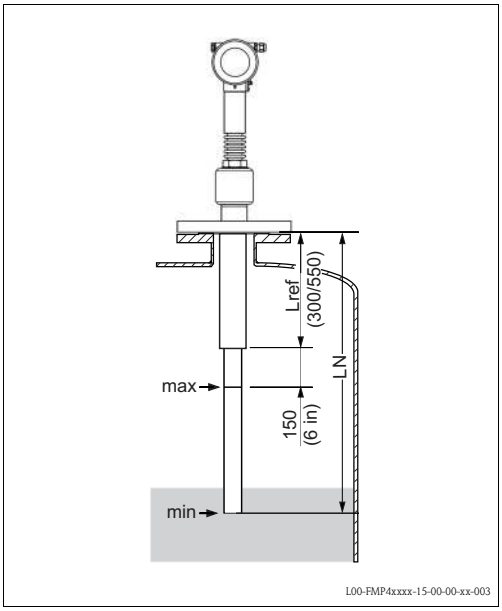

L00-FMP4xxxx-15-00-00-xx-003

10.1.4 Operating conditions: Environment

Ambient temperature range

Ambient temperature for the transmitter: -40 °C to +80 °C. The functionality of the LCD display may be limited for temperatures Ta < -20 °C and Ta > +60 °C. A weather protection cover should be used for outdoor operation if the device is exposed to direct sunlight.

Ambient temperature limits

FMP45 (HT 400 °C)

If the temperature (T_2) at the process connection is below -40 °C or above +80 °C, the permitted ambient temperature (T_1) is limited as shown in the following diagram (temperature derating):

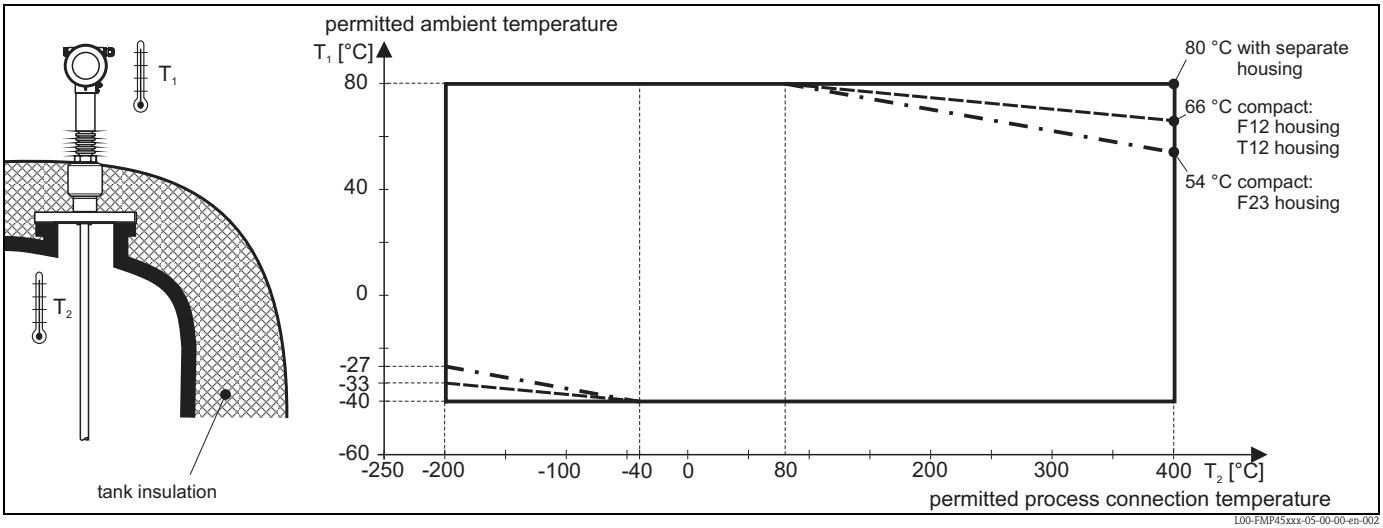

FMP45 (XT 280 °C)

If the temperature (T_2) at the process connection is below -40 °C or above +80 °C, the permitted ambient temperature (T_1) is limited as shown in the following diagram (temperature derating):

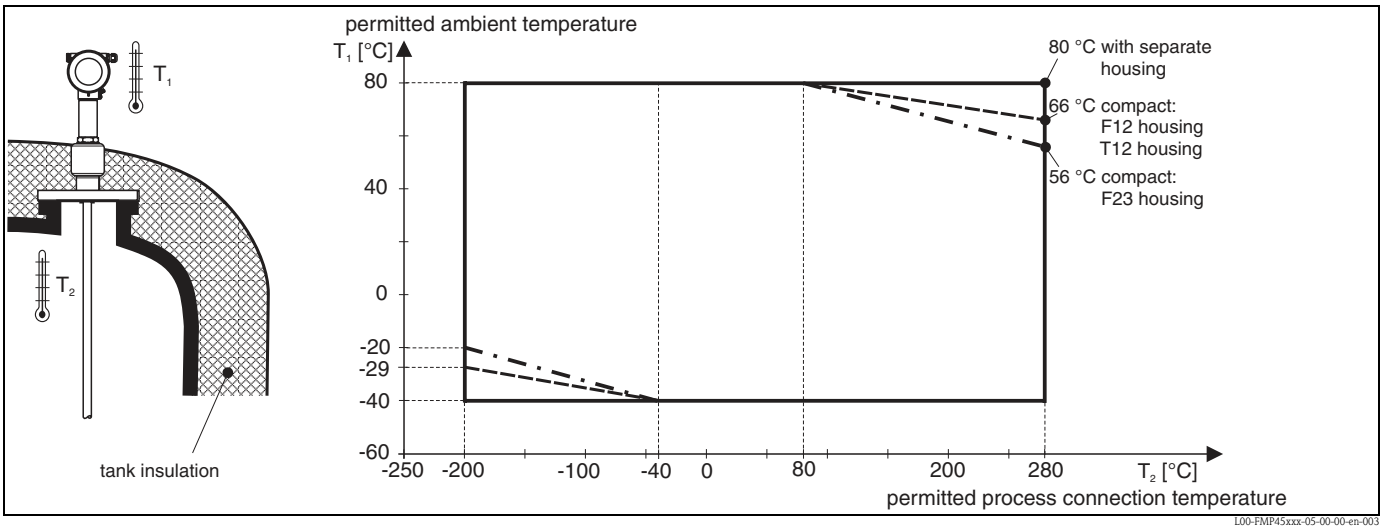

Note!
For saturated steam applications with FMP45 XT the process temperature should not exceed 200 °C (392 °F). For higher process temperatures use the HT version.

Storage temperature	-40 °C to +80 °C.
Climate class	DIN EN 60068-2-38 (test Z/AD)
Vibration resistance	DIN EN 60068-2-64 / IEC 68-2-64: 20 to 2000 Hz, 1 $(m/s^2)^2/Hz$
Cleaning the probe	Depending on the application, contamination or build-up can accumulate on the probe. A thin, even layer only has a slight impact on the measurement. Thick layers can dampen the signal and then reduce the measuring range. Severe, uneven build-up, adhesion e.g. through crystallisation, can lead to incorrect measurement. In such instances, we recommend you, use a non-contact measuring principle, or check the probe regularly for fouling.
Electromagnetic compatibility (EMC)	Electromagnetic compatibility to EN 61326 and NAMUR Recommendation EMC (NE21). Details are provided in the Declaration of Conformity. A standard installation cable is sufficient if only the analog signal is used. Use a shielded cable when working with a superimposed communications signal (HART). When installing the probes in metal and concrete tanks and when using a coax probe: ■ Interference emission to EN 61326 - x series, electrical equipment Class B. ■ Interference immunity to EN 61326 - x series, requirements for industrial areas and NAMUR Recommendation NE21 (EMC) The measured value can be affected by strong electromagnetic fields when installing rod and rope probes without a shielding/metallic wall, e.g. plastic, and in wooden silos. ■ Interference emission to EN 61326 - x series, electrical equipment Class A. ■ Interference Immunity: the measured value can be affected by strong electromagnetic fields.

10.1.5 Operating conditions: Process

Process temperature range

The maximum permitted temperature at the process connection (see Figure for measuring point) is determined by the process connection ordered:

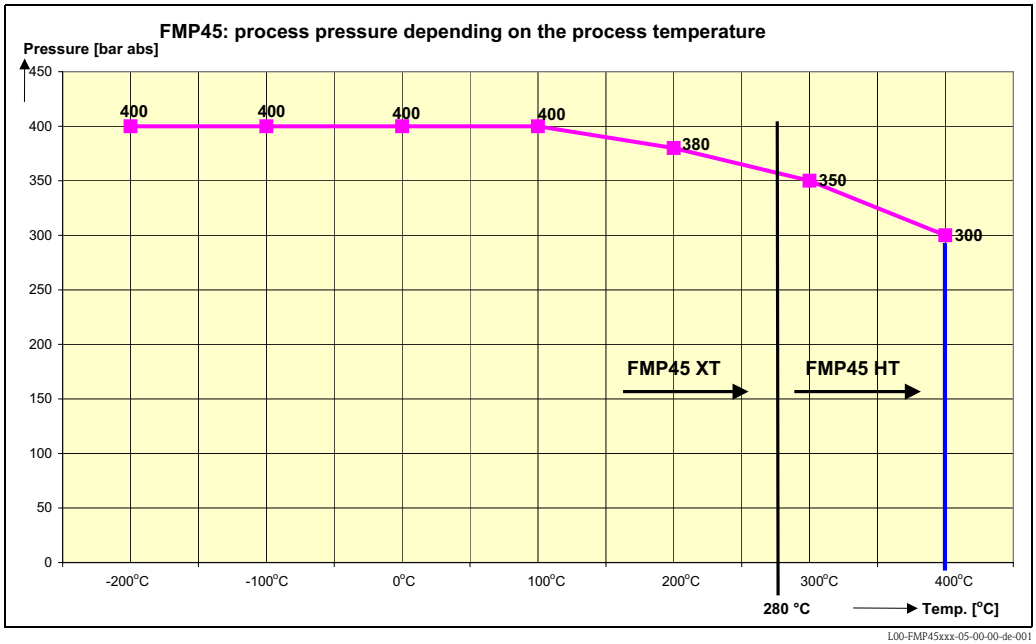

Note!
For saturated steam applications with FMP45 XT the process temperature should not exceed 200 °C (392 °F). For higher process temperatures use the HT version.

Process pressure limits

The specified range may be reduced by the selected process connection. The pressure rating (PN) specified on the flanges refers to a reference temperature of 20 °C, for ASME flanges 100 °F. Observe pressure-temperature dependency.

Please refer to the following standards for the pressure values permitted for higher temperatures:
- EN 1092-1: 2001 Tab.18
  With regard to their temperature stability properties, the materials 1.4404 and 1.4435 are grouped together under 13E0 in EN1092-1 Tab.18. The chemical composition of the two materials can
  be identical.
- ASME B 16.5a - 1998 Tab. 2-2.2 F316
- ASME B 16.5a - 1998 Tab. 2.3.8 N10276
- JIS B 2220

Dielectric constant

- Rod and rope probe: $\varepsilon r \geq 1.6$, when installing in pipes DN ≤ 150 mm: $\varepsilon r \geq 1.4$
- Coax probes: $\varepsilon r \geq 1.4$

10.1.6 Mechanical construction

Material

See TI00386F/00/EN, chapter "Material (not in contact with process)" and "Material (in contact with process)".

Tolerance of probe length

	Rod probes				Rope probes			
over (m / ft)		1 (3.2)	3 (9.8)	6 (20)		1 (3.2)	3 (9.8)	6 (20)
up to (m / ft)	1 (3.2)	3 (9.8)	6 (20)		1 (3.2)	3 (9.8)	6 (20)	
admissible tolerance (mm / inch)	- 5 (- 0.2)	- 10 - 0.4)	- 20 (- 0.8)	- 30 (- 1.2)	- 10 (- 0.4)	- 20 (- 0.8)	- 30 (- 1.2)	- 40 (- 1.6)

Weight

Levelflex M	XT version (max. 280 °C)		
	Rod probe	Rope probe	Coax probe
Weight with F12 or T12 housing	approx. 8.5 kg + approx. 1.6 kg/m Probe length + Flange weight	approx. 8.5 kg + approx. 0.1 kg/m Probe length + Flange weight	approx. 8.5 kg + approx. 3.5 kg/m Probe length + Flange weight
Weight with F23 housing	approx. 12 kg + approx. 1.6 kg/m Probe length + Flange weight	approx. 12 kg + approx. 0.1 kg/m Probe length + Flange weight	approx. 12 kg + approx. 3.5 kg/m Probe length + Flange weight

Levelflex M	HT version (max. 400 °C)		
	Rod probe	Rope probe	Coax probe
Weight with F12 or T12 housing	approx. 9.5 kg + approx. 1.6 kg/m Probe length + Flange weight	approx. 9.5 kg + approx. 0.1 kg/m Probe length + Flange weight	approx. 9.5 kg + approx. 3.5 kg/m Probe length + Flange weight
Weight with F23 housing	approx. 13 kg + approx. 1.6 kg/m Probe length + Flange weight	approx. 13 kg + approx. 0.1 kg/m Probe length + Flange weight	approx. 13 kg + approx. 3.5 kg/m Probe length + Flange weight

10.1.7 Certificates and approvals

CE approval

The measuring system meets the legal requirements of the applicable EC guidelines. These are listed in the corresponding EC Declaration of Conformity together with the standards applied. Endress+Hauser confirms successful testing of the device by affixing to it the CE mark.

Manufacturer declaration

Permitted pressures, temperatures and load cycles as per EN 13445 and AD- data sheet S2 (for FMP45).

Ex approval

The devices are certified for use in hazardous areas. The Safety Instructions to be observed are enclosed and referenced on the nameplate:

- Europe: EC type-examination certificate, safety instructions XA
- USA: FM Approval, Control Drawing
- Canada: CSA Certificate of Compliance, Control Drawing
- China: NEPSI Explosion Protection Certificate of Conformity, Safety Instructions XA
- Japan: TIIS Certificate for Ex-apparatus

Correlation of safety instructions (XA) and certificates (ZE) to the device:

Feature		Variant	ZE256F	ZD117F	ZD116F	ZD114F	ZD113F	ZD083F	ZD082F	ZD081F	ZD080F	ZD021F	ZD110F	ZD109F	ZD107F	ZD106F	ZD078F	ZD077F	ZD076F	ZD075F	XA396F	XA380F	XA379F	XA378F	XA376F	XA330F	XA217F	XA216F	XA215F	XA213F	XA212F	XA211F	XA173F	XA172F	XA168F	XA167F	XA166F	XA165F	XA164F
10 Approval:	Non-hazardous area	A																																					
	NEPSI Ex emb (ia) IIC T6	C																							X														
	Non-hazardous area, WHG	F	X																																				
	ATEX II 3G Ex nA II T6	G																								X													
	NEPSI Ex ia IIC T6	I																					X	X															
	NEPSI Ex d(ia) IIC T6	J																				X																	
	TIIS Ex d (ia) IIC T1	K																																					
	TIIS Ex d (ia) IIC T2	L																																					
	FM DIP Cl.II Div.1 Gr. E-G N.I.	M															X																						
	CSA General Purpose	N																																					
	CSA DIP Cl.II Div.1 Gr. G + coal dust, N.I.	P						X																															
	*NEPSI DIP	Q																																					
	NEPSI Ex nA II T6	R																			X																		
	FM IS Cl.I,II,III Div.1 Gr. A-G N.I., zone 0, 1, 2	S										X	X	X	X	X			X	X																			
	FM XP Cl.I,II,III Div.1 Gr. A-G, zone 1, 2	T																X																					
	CSA IS Cl.I,II,III Div.1 Gr. A-D, G + coal dust, N.I., zone 0, 1	U		X	X	X	X			X	X																												
	CSA XP Cl.I,II,III Div.1 Gr. A-D, G + coal dust, N.I., zone 1, 2	V							X																														
	ATEX II 1/2G Ex ia IIC T6/IECEx Zone0/1	1																										X	X		X	X						X	X
	ATEX II 1/2D/IEC Ex td A20/21, Alu blind cover	2																								X				X			X	X	X				
	ATEX II 1/2G Ex emb (ia) IIC T6/IECEx	3																																		X			
	ATEX II 1/3D/IEC Ex td A20/22 [1]	4																								X				X			X	X	X				
	ATEX II 1/2G Ex ia IIC T6, ATEX II 1/3D	5																								X				X				X					
	ATEX II 1/2G Ex ia IIC T6, WHG	6	X																									X	X		X	X						X	X
	ATEX II 1/2G Ex d (ia) IIC T6/IEC Ex d (ia) IIC T6	7																																			X		
	ATEX II 1/2G Ex ia IIC T6, ATEX II 1/3D, WHG	8	X																								X			X				X					
50 Power supply Output:	2-wire 4-20mA SIL HART	B			X		X		X		X			X		X		X		X	X	X		X	X	X	X		X	X		X	X	X		X		X
	2-wire PROFIBUS PA	D		X		X			X	X		X	X		X			X	X		X	X	X		X	X	X	X		X	X		X	X		X	X	X	
	2-wire FOUNDATION Fieldbus	F		X		X			X	X		X	X		X			X	X		X	X	X		X	X	X	X		X	X		X	X		X	X	X	
	4-wire 90-250VAC 4-20mA SIL HART	G						X									X																		X				
	4-wire 10.5-32VDC 4-20mA SIL HART	H						X									X																		X				
	2-wire 4-20mA HART, Interface	K			X		X		X		X			X		X		X		X	X	X		X	X	X	X		X	X		X	X	X		X		X
80 Housing:	F12 Alu, coated IP68 NEMA6P	A						X		X	X	X					X		X	X		X	X		X								X	X			X	X
	F23 316L IP68 NEMA6P	B				X	X					X			X	X				X		X	X		X				X	X	X								
	T12 Alu, coated IP68 NEMA6P,	C							X								X			X	X			X								X			X	X			
	T12 Alu, coated IP68 NEMA6P + OVP	D		X	X							X	X	X						X		X	X		X	X	X												
90 Cable entry:	thread M20 (EEx d > thread M20)	2																		X	X	X	X	X														
	thread G1/2	3																		X	X	X	X	X														
	thread NPT1/2	4																		X	X	X	X	X														
	Plug M12	5																		X		X	X															
	Plug 7/8"	6																		X		X	X															

1) Housing F12/F23/T12-OVP: In combination with electronics B, D or F supply intrinsically safe.
** in preparation*

Overspill protection	WHG. See "Ordering structure", Page 6 (ZE00256F/00/DE). SIL 2, for 4 to 20 mA output (see SD00174F/00/EN "Functional safety manual").
Telecommunication	Complies with "Part 15" of the FCC rules for an "Unintentional Radiator". All probes meet the requirements for a "Class A Digital Device". In addition, all probes in metallic tanks as well as the coax probe meet the requirements for a "Class B Digital Device".
External standards and guidelines	The European directives and standards applied can be taken from the associated EC Declarations of Conformity. In addition, the following also applied for Levelflex M: EN60529 Protection class of housing (IP-code) Namur – international user association of automation technology in process industries. ■ NE21 Electromagnetic compatibility (EMC) of industrial process and laboratory control equipment. ■ NE43 Standardization of the signal level for the failure information of digital transmitters.
Pressure Equipment Directive	The FMP45 corresponds to the 97/23/EC Directive (Pressure Equipment Directive). It is a pressure accessory with a volume < 0.1 l, corresponding to Category I. Conformity assessment was carried out as per Module A, the design as per EN 13445 and AD 2000 technical specifications. FMP 45 is not suitable for use with unstable gases at nominal pressures above 200 bar.
Steam boiler approval	The FMP45 is approved as a limiting device for high water (HW) and low water (LW) for liquids in containers which are subject to the requirements of EN 12952-11 and EN 12953-9 (certified by TÜV Nord). See "Ordering structure", → 🖹 6. Further information can be founc in the safety instructions for steam boiler approval (SD00288F/00/EN).

10.1.8 Additional documentation

Additional documentation	This additional documentation can be found on our product pages on www.endress.com. ■ Technical Information (TI00386F/00/EN) ■ Safety Manual "Functional safety manual" (SD00174F/00/EN) ■ Certificate "Allgemeine bauaufsichtliche Zulassung" (ZE00256F/00/DE) ■ Safety instruction for steam boiler approval (SD00288F/00/EN) ■ Brief operating instructions (KA01044F/00/EN)

11 Appendix

11.1 Operating menu HART (Display modul)

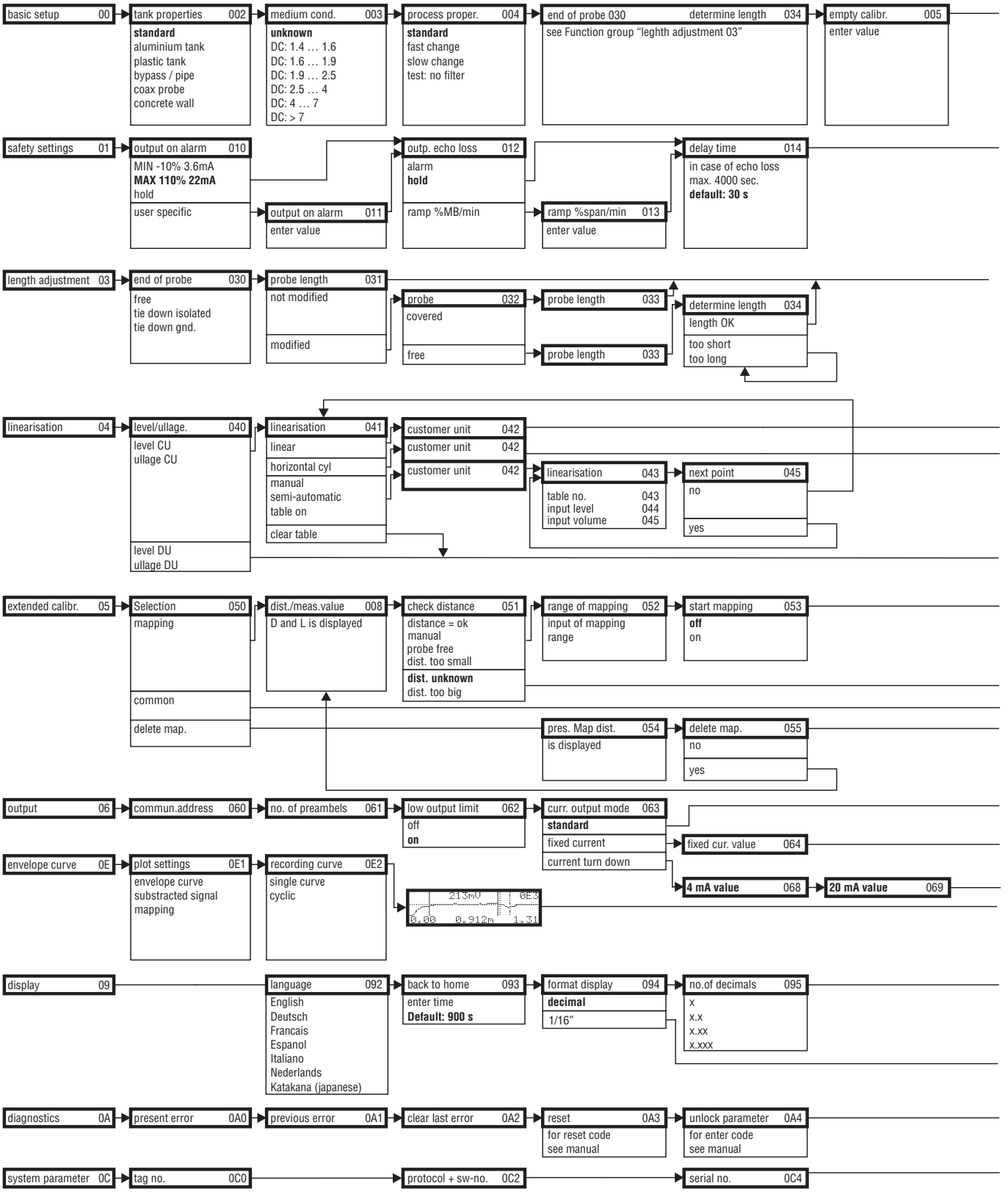

Note! The default values of the parameters are typed in boldface.

L00-FMP4xxxx-19-00-01-en-002

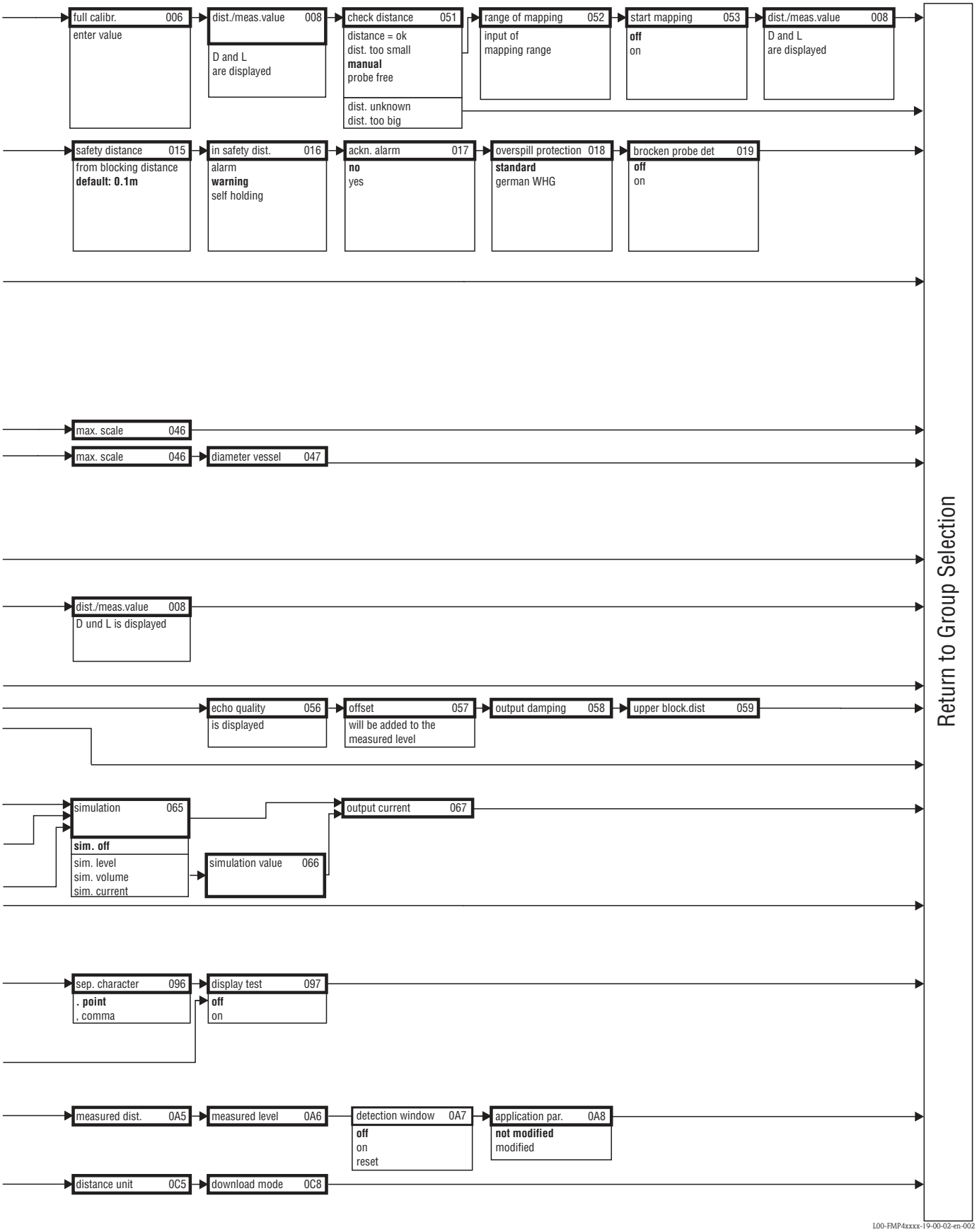
full calibr. 006
enter value
dist./meas.value 008
D and L
are displayed
check distance 051
distance = ok
dist. too small
manual
probe free
dist. unknown
dist. too big
range of mapping 052
input of
mapping range
start mapping 053
off
on
dist./meas.value 008
D and L
are displayed
safety distance 015
from blocking distance
default: 0.1m
in safety dist. 016
alarm
warning
self holding
ackn. alarm 017
no
yes
overspill protection 018
standard
german WHG
brocken probe det 019
off
on
max. scale 046
max. scale 046
diameter vessel 047
dist./meas.value 008
D und L is displayed
echo quality 056
is displayed
offset 057
will be added to the
measured level
output damping 058
upper block.dist 059
simulation 065
sim. off
sim. level
sim. volume
sim. current
simulation value 066
output current 067
sep. character 096
. point
, comma
display test 097
off
on
measured dist. 0A5
measured level 0A6
detection window 0A7
off
on
reset
application par. 0A8
not modified
modified
distance unit 0C5
download mode 0C8
Return to Group Selection
L00-FMP4xxxx-19-00-02-en-002

11.2 Patents

This product may be protected by at least one of the following patents.
Further patents are pending.

- US 5,661,251 ≙ EP 0 780 664
- US 5,827,985 ≙ EP 0 780 664
- US 5,884,231 ≙ EP 0 780 665
- US 5,973,637 ≙ EP 0 928 974

Index

A
Accessories 65
Alarm 37
Application errors 73

B
Basic Setup 41, 43
Blocking distance 52

C
CE mark 9
Centering disks 67
Commissioning 40
Commubox 28, 68
Connecting 28

D
Declaration of conformity 9
Degree of protection 29
Designated use 4
Determine length 47, 60
Dimensions 11
Display 32

E
Empty calibration 47, 60
End of probe 59
Engineering hints 20
Envelope curve 54
Equipotential bonding 29
Error messages 37, 71
Ex approval 84
Exterior cleaning 64

F
F12 housing 24
F23 housing 24
FHX40 66
Field Communicator 375, 475 . . . . . 28, 38
FieldCare 28, 58, 86
Full calibration 48

G
Gasphase Compensation 79

H
HART 26, 28, 38

I
Interference echo mapping 61

K
Key assignment 33

L
Lock 34

M
Maintenance 64
Medium properties 44, 59
Mounting 10

N
Nameplate 6

O
Operating menu 31
Operation 30, 34
Operational safety 4
Ordering structure 6

P
Probe 60
Probe length 60
Process propert 59
Process properties 45

R
Repairs 64
Repairs to Ex-approved devices 64
Replacement 64
Reset 36
Return 76
RMA422 28
RN221N 28

S
Safety conventions and symbols 5
Service Interface FXA291 68
Software history 76
Spare Parts 75
System error messages 71

T
T12 housing 25
Tank properties 59
Technical data 77
Terminal compartment 26
Trouble-shooting 70
Trouble-shooting instructions 70
Turn housing 23

U
Unlock parameter 35

V
VU331 54

W
Warning 37
weather protection cover 65
Wiring 24

Endress+Hauser

People for Process Automation

Declaration of Hazardous Material and De-Contamination

Erklärung zur Kontamination und Reinigung

RA No. ☐☐☐☐☐☐☐☐

Please reference the Return Authorization Number (RA#), obtained from Endress+Hauser, on all paperwork and mark the RA# clearly on the outside of the box. If this procedure is not followed, it may result in the refusal of the package at our facility.
Bitte geben Sie die von E+H mitgeteilte Rücklieferungsnummer (RA#) auf allen Lieferpapieren an und vermerken Sie diese auch außen auf der Verpackung. Nichtbeachtung dieser Anweisung führt zur Ablehnung ihrer Lieferung.

Because of legal regulations and for the safety of our employees and operating equipment, we need the "Declaration of Hazardous Material and De-Contamination", with your signature, before your order can be handled. Please make absolutely sure to attach it to the outside of the packaging.
Aufgrund der gesetzlichen Vorschriften und zum Schutz unserer Mitarbeiter und Betriebseinrichtungen, benötigen wir die unterschriebene "Erklärung zur Kontamination und Reinigung", bevor Ihr Auftrag bearbeitet werden kann. Bringen Sie diese unbedingt außen an der Verpackung an.

Type of instrument / sensor
Geräte-/Sensortyp _____

Serial number
Seriennummer _____

☐ **Used as SIL device in a Safety Instrumented System /** *Einsatz als SIL Gerät in Schutzeinrichtungen*

Process data/ *Prozessdaten*
Temperature / *Temperatur* _____ [°F] _____ [°C]
Pressure / *Druck* _____ [psi] _____ [Pa]
Conductivity / *Leitfähigkeit* _____ [µS/cm]
Viscosity / *Viskosität* _____ [cp] _____ [mm²/s]

Medium and warnings
Warnhinweise zum Medium



	Medium /concentration *Medium /Konzentration*	Identification CAS No.	flammable *entzündlich*	toxic *giftig*	corrosive *ätzend*	harmful/ irritant *gesundheits-schädlich/ reizend*	other * *sonstiges**	harmless *unbedenklich*
Process medium / *Medium im Prozess*								
Medium for process cleaning / *Medium zur Prozessreinigung*								
Returned part cleaned with / *Medium zur Endreinigung*								

* explosive; oxidising; dangerous for the environment; biological risk; radioactive
* *explosiv; brandfördernd; umweltgefährlich; biogefährlich; radioaktiv*

Please tick should one of the above be applicable, include safety data sheet and, if necessary, special handling instructions.
Zutreffendes ankreuzen; trifft einer der Warnhinweise zu, Sicherheitsdatenblatt und ggf. spezielle Handhabungsvorschriften beilegen.

Description of failure / *Fehlerbeschreibung* _____

_____

_____

Company data / *Angaben zum Absender*

Company / *Firma* _____
_____
Address / *Adresse*
_____
_____

Phone number of contact person / *Telefon-Nr. Ansprechpartner:*
_____
Fax / E-Mail _____
Your order No. / *Ihre Auftragsnr.* _____

"We hereby certify that this declaration is filled out truthfully and completely to the best of our knowledge.We further certify that the returned parts have been carefully cleaned. To the best of our knowledge they are free of any residues in dangerous quantities."
"Wir bestätigen, die vorliegende Erklärung nach unserem besten Wissen wahrheitsgetreu und vollständig ausgefüllt zu haben. Wir bestätigen weiter, dass die zurückgesandten Teile sorgfältig gereinigt wurden und nach unserem besten Wissen frei von Rückständen in gefahrbringender Menge sind."

_____ (place, date / *Ort, Datum*)

_____ Name, dept./ *Abt.* (please print / *bitte Druckschrift*)

_____ Signature / *Unterschrift*

P/SF/Konta XV

www.endress.com/worldwide

Endress+Hauser

People for Process Automation

BA00279F/00/EN/15.11
71154965
CCS/FM+SGML 6.0/ProMoDo

71154965