TI01300D/06/EN/04.25-00
71726212
2025-12-01

Technical Information
Proline Promass E 200

Coriolis flowmeter



The genuine loop-powered flowmeter for minimized cost of ownership

Application

- Measuring principle operates independently of physical fluid properties such as viscosity or density
- Accurate measurement of liquids and gases for a wide range of standard applications

Device properties

- Compact dual-tube sensor
- Medium temperature up to +150 °C (+302 °F)
- Process pressure up to 100 bar (1 450 psi)
- Loop-powered technology
- Robust dual-compartment housing
- Plant safety: worldwide approvals (SIL, Haz. area)

Your benefits

- Cost-effective – multipurpose device; an alternative to conventional volumetric flowmeters
- Fewer process measuring points – multivariable measurement (flow, density, temperature)
- Space-saving installation – no in-/outlet run needs
- Convenient device wiring – separate connection compartment
- Safe operation – no need to open the device due to display with touch control, background lighting
- Integrated verification – Heartbeat Technology

Endress+Hauser
People for Process Automation

Table of contents

About this document 4
Symbols 4

Function and system design 5
Measuring principle 5
Measuring system 6
Security 6

Input 8
Measured variable 8
Measuring range 8
Operable flow range 9
Input signal 9

Output 9
Output signal 9
Signal on alarm 11
Load 12
Ex connection data 13
Low flow cut off 13
Galvanic isolation 13
Protocol-specific data 13

Power supply 15
Terminal assignment 15
Pin assignment, device plug 15
Supply voltage 16
Power consumption 16
Current consumption 17
Power supply failure 17
Electrical connection 17
Potential equalization 19
Terminals 19
Cable entries 19
Cable specification 19
Overvoltage protection 20

Performance characteristics 21
Reference operating conditions 21
Maximum measurement error 21
Repeatability 22
Response time 22
Influence of ambient temperature 22
Influence of medium temperature 23
Influence of medium pressure 23
Design fundamentals 24

Installation 25
Mounting location 25
Orientation 26
Inlet and outlet runs 26
Special installation instructions 26

Environment 27
Ambient temperature range 27
Storage temperature 27
Climate class 27
Degree of protection 28
Vibration resistance and shock resistance 28
Electromagnetic compatibility (EMC) 28

Process 28
Medium temperature range 28
Medium density 28
Pressure/temperature ratings 28
Sensor housing 32
Rupture disk 33
Internal cleaning 33
Flow limit 33
Pressure loss 33
Static pressure 33
Thermal insulation 33
Heating 34
Vibrations 34

Mechanical construction 35
Dimensions in SI units 35
Dimensions in US units 46
Weight 51
Materials 52
Process connections 53
Surface roughness 53

Operability 54
Operating concept 54
Languages 54
Onsite operation 54
Remote operation 55
Service interface 57
Supported operating tools 57

Certificates and approvals 58
CE mark 58
UKCA marking 58
RCM marking 58
Ex approval 59
Hygienic compatibility 59
Pharmaceutical compatibility 59
Functional safety 59
HART certification 59
FOUNDATION Fieldbus certification 60
Certification PROFIBUS 60
Pressure Equipment Directive 60
Additional certification 60
External standards and guidelines 60

Ordering information 61
Product generation index 61

Application packages 61
Diagnostic functionality 62
Heartbeat Technology 62
Petroleum & locking function 62

Accessories 62
Device-specific accessories 63
Communication-specific accessories 64
Service-specific accessories 65
System components 65

Documentation 66
Standard documentation 66
Device-dependent additional documentation 67

Registered trademarks 67

About this document

Symbols

Electrical symbols

Symbol	Meaning
	Direct current
	Alternating current
	Direct current and alternating current
	**Ground connection** A grounded terminal which, as far as the operator is concerned, is grounded via a grounding system.
	**Protective earth (PE)** Ground terminals that must be connected to ground prior to establishing any other connections. The ground terminals are located on the interior and exterior of the device: ▪ Interior ground terminal: protective earth is connected to the mains supply. ▪ Exterior ground terminal: device is connected to the plant grounding system.

Communication-specific symbols

Symbol	Meaning
	**Wireless Local Area Network (WLAN)** Communication via a wireless, local area network
	**Bluetooth** Wireless data transmission between devices over a short distance via radio technology
	**LED** LED is off.
	**LED** LED is on.
	**LED** LED flashing.

Symbols for certain types of information

Symbol	Meaning
	**Permitted** Procedures, processes or actions that are permitted.
	**Preferred** Procedures, processes or actions that are preferred.
	**Forbidden** Procedures, processes or actions that are forbidden.
	**Tip** Indicates additional information.
	Reference to documentation
	Reference to page
	Reference to graphic
	Visual inspection

Symbols in graphics

Symbol	Meaning
1, 2, 3, ...	Item numbers
1., 2., 3., ...	Series of steps
A, B, C, ...	Views
A-A, B-B, C-C, ...	Sections
	Hazardous area
	Safe area (non-hazardous area)
	Flow direction

Function and system design

Measuring principle

The measuring principle is based on the controlled generation of Coriolis forces. These forces are always present in a system when both translational and rotational movements are superimposed.

$F_c = 2 \cdot \Delta m\ (v \cdot \omega)$

F_c = Coriolis force

Δm = moving mass

ω = rotational velocity

v = radial velocity in rotating or oscillating system

The amplitude of the Coriolis force depends on the moving mass Δm, its velocity v in the system and thus on the mass flow. Instead of a constant rotational velocity ω, the sensor uses oscillation.

In the sensor, two parallel measuring tubes containing flowing medium oscillate in antiphase, acting like a vibrating fork. The Coriolis forces produced at the measuring tubes cause a phase shift in the tube oscillations (see illustration):

- At zero flow (when the medium is at a standstill) the two tubes oscillate in phase (1).
- Mass flow causes deceleration of the oscillation at the inlet of the tubes (2) and acceleration at the outlet (3).

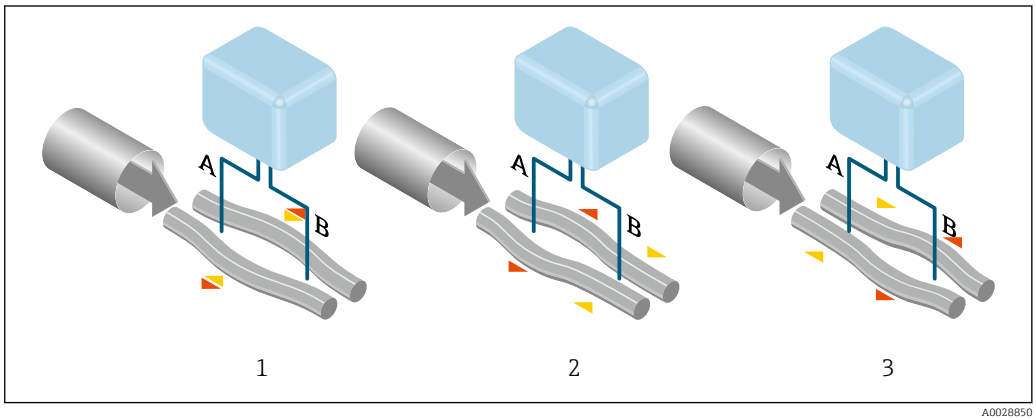

A0028850

The phase shift (A-B) increases with increasing mass flow. Electrodynamic sensors register the tube oscillations at the inlet and outlet. System balance is ensured by the antiphase oscillation of the two measuring tubes. The measuring principle operates independently of temperature, pressure, viscosity, conductivity and flow profile.

Density measurement
The measuring tube is continuously excited at its resonance frequency. A change in the mass and thus the density of the oscillating system (comprising measuring tube and medium) results in a corresponding, automatic adjustment in the oscillation frequency. The resonance frequency is thus a function of the medium density. The microprocessor utilizes this relationship to obtain a density signal.

Volume measurement
Together with the measured mass flow, this is used to calculate the volume flow.

Temperature measurement
The temperature of the measuring tube is determined in order to calculate the compensation factor due to temperature effects. This signal corresponds to the process temperature and is also available as an output signal.

Measuring system

The device consists of a transmitter and a sensor.

The device is available as a compact version:
The transmitter and sensor form a mechanical unit.

Transmitter

Proline 200 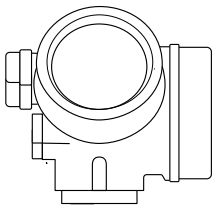 A0013471	Device versions and materials: Compact, aluminum coated: Aluminum, AlSi10Mg, coated Configuration: ▪ External operation via four-line, illuminated local display with touch control and guided menus ("Make-it-run" wizards) for applications ▪ Via operating tools (e.g. FieldCare)

Sensor

Promass E
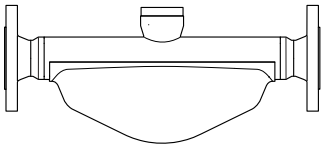
A0030940
	▪ Bent dual-tube system
	▪ Multipurpose sensor
	▪ Ideal substitute for volumetric flowmeters
	▪ Nominal diameter range: DN 8 to 50 (⅜ to 2")
	▪ Materials:
	  ▪ Sensor: stainless steel, 1.4301 (304)
	  ▪ Measuring tubes: stainless steel, 1.4539 (904L)
	  ▪ Process connections: stainless steel, 1.4404 (316/316L)

Security

IT security

The manufacturer warranty is valid only if the product is installed and used as described in the Operating Instructions. The product is equipped with security mechanisms to protect it against any inadvertent changes to the settings.

IT security measures, which provide additional protection for the product and associated data transfer, must be implemented by the operators themselves in line with their security standards.

Device-specific IT security

The device offers a range of specific functions to support protective measures on the operator's side. These functions can be configured by the user and guarantee greater in-operation safety if used correctly. The following list provides an overview of the most important functions:

Protecting access via hardware write protection

Write access to the parameters of the device via the local display or operating tool (e.g. FieldCare, DeviceCare) can be disabled via a write protection switch (DIP switch on the main electronics module). When hardware write protection is enabled, only read access to the parameters is possible.

Hardware write protection is disabled when the device is delivered.

Protecting access via a password

A password can be used to protect against write access to the device parameters.

This controls write access to the device parameters via the local display or other operating tools (e.g. FieldCare, DeviceCare) and, in terms of functionality, corresponds to hardware write protection. If the CDI service interface is used, read access is only possible by first entering the password.

User-specific access code

Local display and operating tool (e.g. FieldCare, DeviceCare)
- Write access to the device parameters via the local display or operating tool (e.g. FieldCare, DeviceCare) can be protected by the modifiable, user-specific access code.
- When delivered, the device does not have an access code; the default value is *0000* (open).

Access via fieldbus

When communicating via fieldbus, access to the device parameters can be restricted to *"Read only"* access. The option can be changed in the **Fieldbus writing access** parameter.

This does not affect cyclic measured value transmission to the higher-order system, which is always guaranteed.

For detailed information on device parameters, see: Description of Device Parameters.

Advanced safety requirements

If the specified requirements for measures cannot be met, alternative measures may need to be put in place. This may involve, for example, mechanical protection of the product against tampering, the cabling, or organizational measures. The Proline measuring instruments can be used in the open field for example. Measures to combat physical tampering of the Proline measuring instruments must be arranged by the customer.

Additional analysis is required if Proline measuring instruments are integrated into a different system. Please note the following:
- The fieldbus network (OT) and company network (IT) must be strictly separated.
- Endress+Hauser recommends the segmentation of the fieldbus networks according to DIN IEC 62443-3-3.

Network

Pay particular attention to the network components used, the router and switches for example. The operator must guarantee the integrity of the components. Access to the network must be restricted by the operator, if necessary.

FDI Packages

Signed FDI Packages can be obtained via www.endress.com for the configuration of the field device.

User training

Depending on the application scenario, users who are not specialized in this area may come in contact with the instrument. We recommend that these users be trained in the safe use of the relevant terminals, components and/or interfaces and be made aware of security issues.

Input

Measured variable

Direct measured variables

- Mass flow
- Density
- Temperature

Calculated measured variables

- Volume flow
- Corrected volume flow
- Reference density

Measuring range

Measuring range for liquids

DN		Measuring range full scale values $\dot{m}_{min(F)}$ to $\dot{m}_{max(F)}$	
[mm]	[in]	[kg/h]	[lb/min]
8	3/8	0 to 2 000	0 to 73.50
15	1/2	0 to 6 500	0 to 238.9
25	1	0 to 18 000	0 to 661.5
40	1 1/2	0 to 45 000	0 to 1 654
50	2	0 to 70 000	0 to 2 573

Measuring range for gases

The full scale value depends on the density and the speed of sound of the gas used. The full scale value can be calculated with the following formulas:

$\dot{m}_{max\,(G)}$ = minimum of $(\dot{m}_{max(F)} \cdot \rho_G : x)$ and

$(\rho_G \cdot (c_G/2) \cdot d_i^2 \cdot (\pi/4) \cdot 3600 \cdot n)$

$\dot{m}_{max(G)}$	Maximum full scale value for gas [kg/h]
$\dot{m}_{max(F)}$	Maximum full scale value for liquid [kg/h]
$\dot{m}_{max(G)} < \dot{m}_{max(F)}$	$\dot{m}_{max(G)}$ can never be greater than $\dot{m}_{max(F)}$
ρ_G	Gas density in [kg/m³] at operating conditions
x	Limitation constant for max. gas flow [kg/m³]
c_G	Speed of sound (gas) [m/s]
d_i	Measuring tube internal diameter [m]
π	Pi
n = 2	Number of measuring tubes

DN		x
[mm]	[in]	[kg/m³]
8	3/8	85
15	1/2	110
25	1	125

DN		x
[mm]	[in]	[kg/m³]
40	1½	125
50	2	125

To calculate the measuring range, use the *Applicator* sizing tool → 65

If calculating the full scale value using the two formulas:

1. Calculate the full scale value with both formulas.
2. The smaller value is the value that must be used.

Recommended measuring range

Flow limit → 33

Operable flow range

Over 1000 : 1.

Flow rates above the preset full scale value do not override the electronics unit, with the result that the totalizer values are registered correctly.

Input signal

External measured values

To increase the measurement accuracy of certain measured variables or to calculate the corrected volume flow for gases, the automation system can continuously write the operating pressure to the measuring instrument. Endress+Hauser recommends the use of a pressure measuring instrument for absolute pressure, e.g. Cerabar M or Cerabar S.

Various pressure transmitters and temperature measuring devices can be ordered from Endress +Hauser: see "Accessories" section → 65

It is recommended to read in external measured values to calculate the following measured variables:
- Mass flow
- Corrected volume flow

HART protocol

The measured values are written from the automation system to the measuring device via the HART protocol. The pressure transmitter must support the following protocol-specific functions:
- HART protocol
- Burst mode

Digital communication

The measured values can be written by the automation system via:
- FOUNDATION Fieldbus
- PROFIBUS PA

Output

Output signal

Current output

Current output 1	4-20 mA HART (passive)
Current output 2	4-20 mA (passive)
Resolution	< 1 µA

Damping	Configurable: 0.0 to 999.9 s
Assignable measured variables	▪ Mass flow ▪ Volume flow ▪ Corrected volume flow ▪ Density ▪ Standard density ▪ Temperature

Pulse/frequency/switch output

Function	Can be configured as pulse, frequency or switch output
Version	Passive, open collector
Maximum input values	▪ DC 35 V ▪ 50 mA For information on the Ex connection values → 13
Voltage drop	▪ At ≤ 2 mA: 2 V ▪ At 10 mA: 8 V
Residual current	≤ 0.05 mA
Pulse output	
Pulse width	Configurable: 5 to 2 000 ms
Maximum pulse rate	100 Impulse/s
Pulse value	Configurable
Assignable measured variables	▪ Mass flow ▪ Volume flow ▪ Corrected volume flow
Frequency output	
Output frequency	Configurable: 0 to 1 000 Hz
Damping	Configurable: 0 to 999 s
Pulse/pause ratio	1:1
Assignable measured variables	▪ Mass flow ▪ Volume flow ▪ Corrected volume flow ▪ Density ▪ Standard density ▪ Temperature
Switch output	
Switching behavior	Binary, conductive or non-conductive
Switching delay	Configurable: 0 to 100 s
Number of switching cycles	Unlimited

Assignable functions	▪ Off
	▪ On
	▪ Diagnostic behavior
	▪ Limit value
	  ▪ Mass flow
	  ▪ Volume flow
	  ▪ Corrected volume flow
	  ▪ Density
	  ▪ Standard density
	  ▪ Temperature
	  ▪ Totalizer 1-3
	▪ Flow direction monitoring
	▪ Status
	  ▪ Partially filled pipe detection
	  ▪ Low flow cut off

FOUNDATION Fieldbus

FOUNDATION Fieldbus	H1, IEC 61158-2, galvanically isolated
Data transfer	31.25 kbit/s
Current consumption	10 mA
Permitted supply voltage	9 to 32 V
Bus connection	With integrated reverse polarity protection

PROFIBUS PA

PROFIBUS PA	In accordance with EN 50170 Volume 2, IEC 61158-2 (MBP), galvanically isolated
Data transmission	31.25 kbit/s
Current consumption	16 mA
Permitted supply voltage	9 to 32 V
Bus connection	With integrated reverse polarity protection

Signal on alarm

Depending on the interface, failure information is displayed as follows:

HART current output

Device diagnostics	Device condition can be read out via HART Command 48

Current output

Current output 4-20 mA	
Failure mode	Configurable: ▪ 4 to 20 mA in accordance with NAMUR recommendation NE 43 ▪ 4 to 20 mA in accordance with US ▪ Min. value: 3.59 mA ▪ Max. value: 22.5 mA ▪ Definable value between: 3.59 to 22.5 mA ▪ Actual value ▪ Last valid value

Pulse/frequency/switch output

Pulse output	
Failure mode	Configurable: ▪ Actual value ▪ No pulses
Frequency output	
Failure mode	Configurable: ▪ Actual value ▪ 0 Hz ▪ Definable value between: 0 to 1 250 Hz
Switch output	
Failure mode	Configurable: ▪ Current status ▪ Open ▪ Closed

FOUNDATION Fieldbus

Status and alarm messages	Diagnostics in accordance with FF-891
Failure current FDE (Fault Disconnection Electronic)	0 mA

PROFIBUS PA

Status and alarm messages	Diagnostics in accordance with PROFIBUS PA Profile 3.02
Failure current FDE (Fault Disconnection Electronic)	0 mA

Local display

Plain text display	With information on cause and remedial measures
Backlight	Additionally for device version with SD03 local display: red lighting indicates a device error.

Status signal as per NAMUR recommendation NE 107

Interface/protocol

- Via digital communication
  - HART protocol
  - FOUNDATION Fieldbus
  - PROFIBUS PA
- Via service interface
  Endress+Hauser Common Data Interface (CDI)
- Plain text display
  With information on cause and remedial actions

Additional information on remote operation → 55

LEDs

LEDs are only available for PROFINET over Ethernet-APL.

Status information	Status indicated by various LEDs The following information is displayed depending on the device version: ▪ Supply voltage active ▪ Data transmission active ▪ Network available ▪ Connection established

Load

Load for current output: 0 to 500 Ω, depending on the external supply voltage of the power supply unit

Calculation of the maximum load

Depending on the supply voltage of the power supply unit (U_S), the maximum load (R_B) including line resistance must be observed to ensure adequate terminal voltage at the device. In doing so, observe the minimum terminal voltage

- For U_S = 17.9 to 18.9 V: $R_B \leq (U_S - 17.9\ V)$: 0.0036 A
- For U_S = 18.9 to 24 V: $R_B \leq (U_S - 13\ V)$: 0.022 A
- For U_S = ≥ 24 V: $R_B \leq 500\ \Omega$

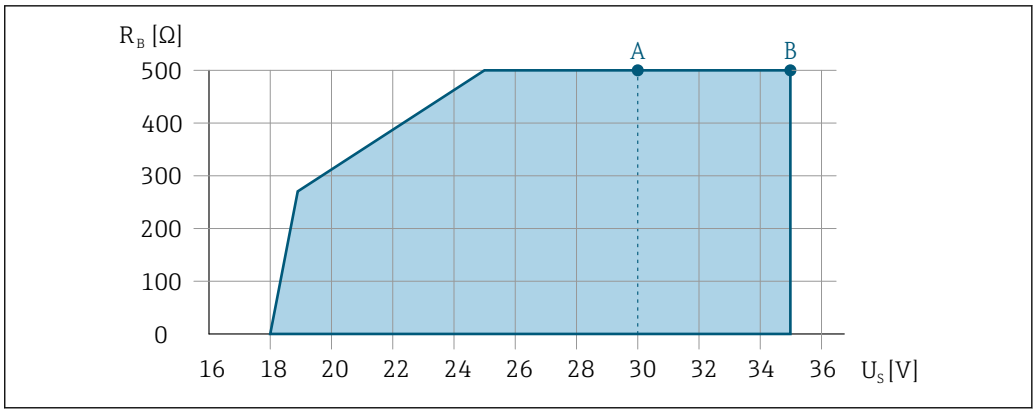

A Operating range for order code for "Output", option A "4-20 mA HART"/option B "4-20 mA HART, pulse/frequency/switch output" with Ex i and option C "4-20 mA HART + 4-20 mA analog"
B Operating range for order code for "Output", option A "4-20 mA HART"/option B "4-20 mA HART, pulse/frequency/switch output" with non-Ex and Ex d

Sample calculation
Supply voltage of power supply unit: U_S =19 V
Maximum load: $R_B \leq$ (19 V - 13 V): 0.022 A = 273 Ω

Ex connection data

The devices are certified for use in hazardous areas and the relevant safety instructions are provided in the separate "Safety Instructions" (XA) document. Reference is made to this document on the nameplate.

Low flow cut off

The switch points for low flow cut off are user-selectable.

Galvanic isolation

All outputs are galvanically isolated from one another.

Protocol-specific data

HART

Manufacturer ID	0x11
Device type ID	0x54
HART protocol revision	7
Device description files (DTM, DD)	Information and files available at: www.endress.com → Downloads area
Load	▪ Min. 250 Ω ▪ Max. 500 Ω
System integration	For information on system integration, see Operating Instructions ▪ Measured variables via HART protocol ▪ Burst Mode functionality

FOUNDATION Fieldbus

Manufacturer ID	0x452B48
Ident number	0x1054
Device revision	1
DD revision	Information and files at: ▪ www.endress.com → Download Area ▪ www.fieldcommgroup.org
CFF revision	
Device Tester Version (ITK version)	6.1.1
ITK Test Campaign Number	IT094200

Link Master capability (LAS)	Yes
Choice of "Link Master" and "Basic Device"	Yes Factory setting: Basic Device
Node address	Factory setting: 247 (0xF7)
Supported functions	The following methods are supported: ▪ Restart ▪ ENP Restart ▪ Diagnostic
Virtual Communication Relationships (VCRs)	
Number of VCRs	44
Number of link objects in VFD	50
Permanent entries	1
Client VCRs	0
Server VCRs	10
Source VCRs	43
Sink VCRs	0
Subscriber VCRs	43
Publisher VCRs	43
Device Link Capabilities	
Slot time	4
Min. delay between PDU	8
Max. response delay	Min. 5
System integration	For information on system integration, see Operating Instructions ▪ Cyclic data transmission ▪ Description of the modules ▪ Execution times ▪ Methods

PROFIBUS PA

Manufacturer ID	0x11
Ident number	0x155F
Profile version	3.02
Device description files (GSD, DTM, DD)	Information and files at: ▪ www.endress.com → Download Area ▪ https://www.profibus.com
Supported functions	▪ Identification & Maintenance Simple device identification via control system and nameplate ▪ PROFIBUS upload/download Reading and writing parameters is up to ten times faster with PROFIBUS upload/download ▪ Condensed Status Simplest and self-explanatory diagnostic information by categorizing diagnostic messages that occur
Configuration of the device address	▪ DIP switches on the I/O electronics module ▪ Local display ▪ Via operating tools (e.g. FieldCare)
System integration	For information on system integration, see Operating Instructions ▪ Cyclic data transmission ▪ Block model ▪ Description of the modules

Power supply

Terminal assignment

Transmitter

Connection versions

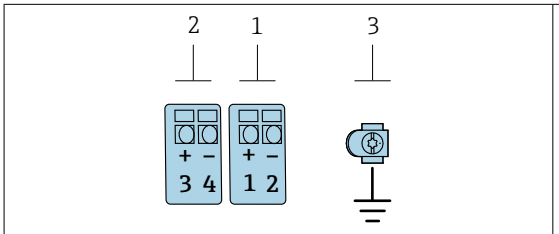

Maximum number of terminals, without integrated overvoltage protection

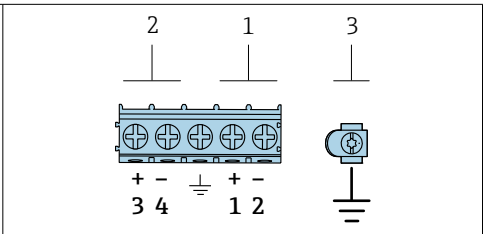

Maximum number of terminals, with integrated overvoltage protection

1 Output 1 (passive): supply voltage and signal transmission
2 Output 2 (passive): supply voltage and signal transmission
3 Ground terminal for cable shield

Order code for "Output"	Terminal numbers			
	Output 1		Output 2	
	1 (+)	2 (-)	3 (+)	4 (-)
Option **A**	4-20 mA HART (passive)		-	
Option **B** [1]	4-20 mA HART (passive)		Pulse/frequency/switch output (passive)	
Option **C** [1]	4-20 mA HART (passive)		4-20 mA analog (passive)	
Option **E** [1] [2]	FOUNDATION Fieldbus		Pulse/frequency/switch output (passive)	
Option **G** [1] [3]	PROFIBUS PA		Pulse/frequency/switch output (passive)	

1) Output 1 must always be used; output 2 is optional.
2) FOUNDATION Fieldbus with integrated reverse polarity protection.
3) PROFIBUS PA with integrated reverse polarity protection.

Pin assignment, device plug

PROFIBUS PA

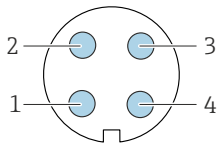

Pin		Assignment	Coding	Plug/socket
1	+	PROFIBUS PA +	A	Plug
2		Grounding		
3	-	PROFIBUS PA –		
4		Not used		
Metal plug housing		Cable shield		

Recommended plug:
- Binder, series 713, part no. 99 1430 814 04
- Phoenix, part no. 1413934 SACC-FS-4QO SH PBPA SCO

FOUNDATION Fieldbus

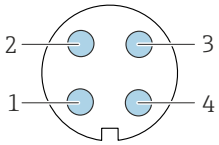

Pin	Assignment		Coding	Plug/socket
1	+	Signal +	A	Plug
2	-	Signal –		
3		Cable shield[1]		
4		Not used		
Metal plug housing		Cable shield		
	[1]If a cable shield is used			

Supply voltage

Transmitter

An external power supply is required for each output.

For installation in systems where the power unit is safety-approved (e.g. SELV/PELV Class 2 limited energy). Only one wire is permitted per terminal.

Order code for "Output"	Minimum Terminal voltage	Maximum Terminal voltage
Option A [1) 2)]: 4-20 mA HART	▪ For 4 mA: ≥ DC 17.9 V ▪ For 20 mA: ≥ DC 13.5 V	DC 35 V
Option B [1) 2)]: 4-20 mA HART, pulse/frequency/switch output	▪ For 4 mA: ≥ DC 17.9 V ▪ For 20 mA: ≥ DC 13.5 V	DC 35 V
Option C [1) 2)]: 4-20 mA HART + 4-20 mA analog	▪ For 4 mA: ≥ DC 17.9 V ▪ For 20 mA: ≥ DC 13.5 V	DC 30 V
Option E [3)]: FOUNDATION Fieldbus, pulse/frequency/switch output	≥ DC 9 V	DC 32 V
Option G [3)]: PROFIBUS PA, pulse/frequency/switch output	≥ DC 9 V	DC 32 V

1) External supply voltage of the power supply unit with load.
2) For device versions with SD03 local display: The terminal voltage must be increased by DC 2 V if background lighting is used.
3) For device version with SD03 local display: The terminal voltage must be increased by DC 0.5 V if background lighting is used.

For information about the load, see → 🖹 12

Available as an accessory: Supply unit for power supply → 🖹 65

For information on the Ex connection values → 🖹 13

Power consumption

Transmitter

Order code for "Output; input"	Maximum power consumption
Option A: 4-20 mA HART	770 mW
Option B: 4-20 mA HART, pulse/frequency/switch output	▪ Operation with output 1: 770 mW ▪ Operation with output 1 and 2: 2 770 mW
Option C: 4-20 mA HART + 4-20 mA analog	▪ Operation with output 1: 660 mW ▪ Operation with output 1 and 2: 1 320 mW

Order code for "Output; input"	Maximum power consumption
Option E: FOUNDATION Fieldbus, pulse/ frequency/switch output	▪ Operation with output 1: 576 mW ▪ Operation with output 1 and 2: 2 576 mW
Option G: PROFIBUS PA, pulse/frequency/ switch output	▪ Operation with output 1: 512 mW ▪ Operation with output 1 and 2: 2 512 mW

For information on the Ex connection values → 13

Current consumption

Current output

For every 4-20 mA current output or current output: 3.6 to 22.5 mA

If the option **Defined value** is selected in the **Failure mode** parameter : 3.59 to 22.5 mA

FOUNDATION Fieldbus

18 mA

PROFIBUS PA

16 mA

Power supply failure

- Totalizers stop at the last value measured.
- Depending on the device version, the configuration is retained in the device memory or in the plug-in memory (HistoROM DAT).
- Error messages (incl. total operated hours) are stored.

Electrical connection

Transmitter connection

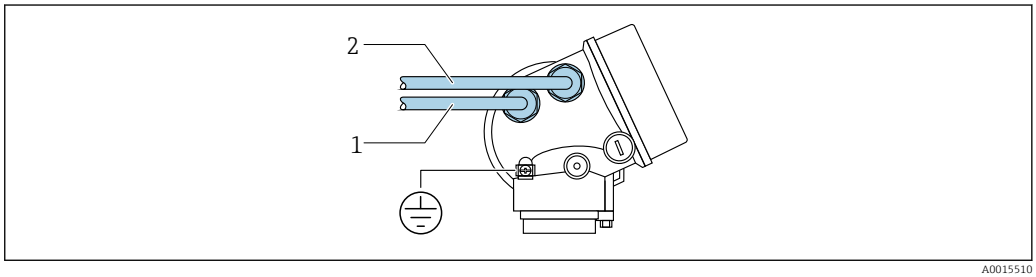

A0015510

1 Cable entry for output 1
2 Cable entry for output 2

Connection examples

Current output 4 to 20 mA (without HART)

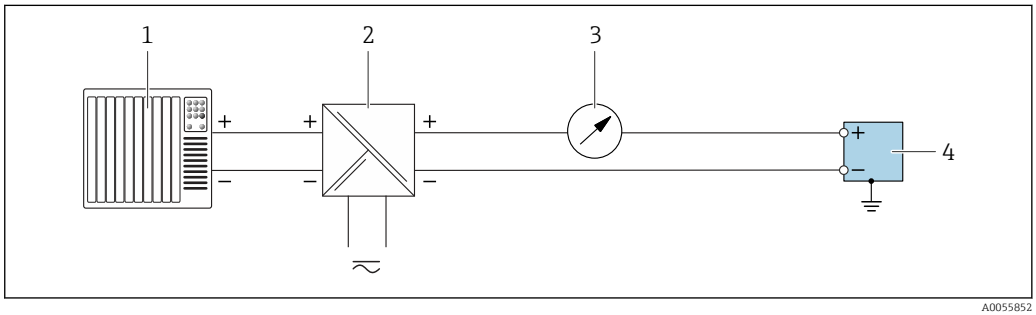

A0055852

1 Connection example for 4 to 20 mA current output (passive)

1 Automation system with current input (e.g. PLC)
2 Power supply
3 Optional additional display unit: Observe maximum load
4 Transmitter with current output (passive)

Pulse output/frequency output/switch output

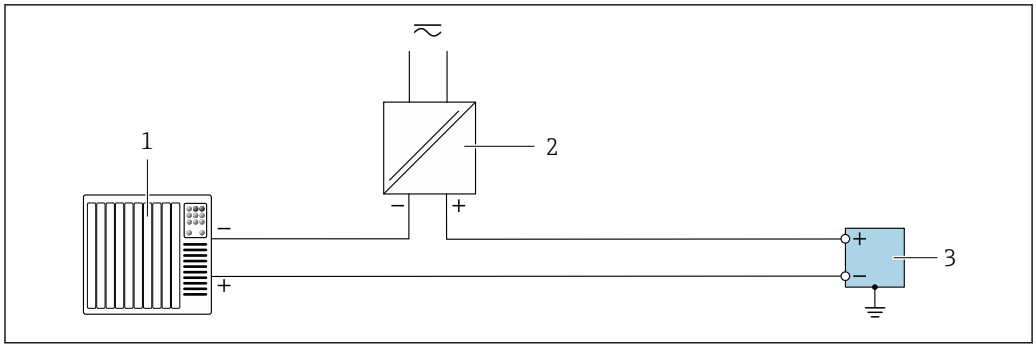

2 Connection example for pulse output/frequency output/switch output (passive)

1 *Automation system with pulse input/frequency input/switch input (e.g. PLC)*
2 *Power supply*
3 *Transmitter with pulse output/frequency output/switch output (passive)*

Current output 4 to 20 mA HART

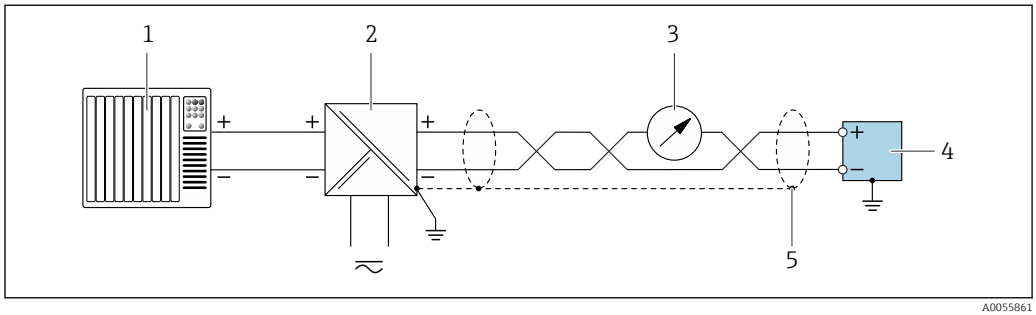

3 Connection example for 4 to 20 mA current output with HART (passive)

1 *Automation system with 4 to 20 mA current input with HART (e.g. PLC)*
2 *Power supply*
3 *Optional display unit: Note maximum load*
4 *Transmitter with 4 to 20 mA current output with HART (passive)*
5 *Ground cable shield at one end. For installations in compliance with NAMUR NE 89, grounding of the cable shield on both sides is required.*

PROFIBUS PA

See https://www.profibus.com "PROFIBUS Installation Guidelines".

FOUNDATION Fieldbus

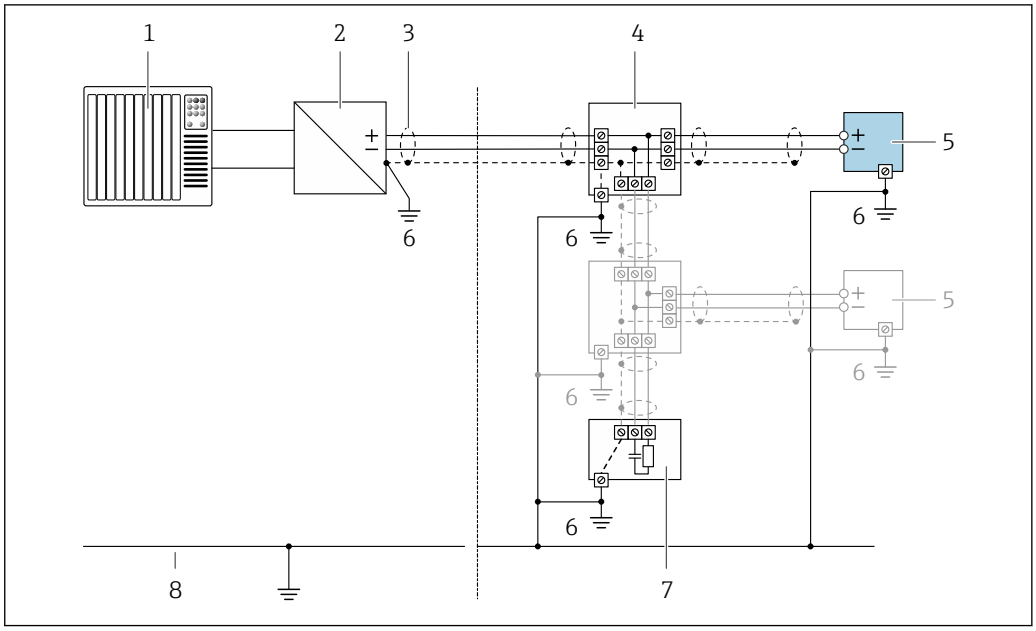

4 *Connection example for FOUNDATION Fieldbus*

1 *Automation system (e.g. PLC)*
2 *Power Conditioner (FOUNDATION Fieldbus)*
3 *Cable shield provided at one end. The cable shield must be grounded at both ends to comply with EMC requirements; observe cable specifications*
4 *T-box*
5 *Measuring instrument*
6 *Local grounding*
7 *Bus terminator*
8 *Potential equalization conductor*

Potential equalization

Requirements

For potential equalization:
- Pay attention to in-house grounding concepts
- Take account of operating conditions like the pipe material and grounding
- Connect the medium, sensor and transmitter to the same electric potential
- Use a ground cable with a minimum cross-section of 6 mm² (10 AWG) and a cable lug for potential equalization connections

Terminals

- For device version without integrated overvoltage protection: plug-in spring terminals for wire cross-sections 0.5 to 2.5 mm² (20 to 14 AWG)
- For device version with integrated overvoltage protection: screw terminals for wire cross-sections 0.2 to 2.5 mm² (24 to 14 AWG)

Cable entries

The type of cable entry available depends on the specific device version.

Cable gland (not for Ex d)

M20 × 1.5

Thread for cable entry

- NPT ½"
- G ½"
- M20 × 1.5

Cable specification

Permitted temperature range

- The installation guidelines that apply in the country of installation must be observed.
- The cables must be suitable for the minimum and maximum temperatures to be expected.

Signal cable

4 to 20 mA current output (without HART)

Standard installation cable is sufficient.

Pulse/frequency/switch output

Standard installation cable is sufficient.

Current output 4 to 20 mA HART

Shielded twisted-pair cable.

See https://www.fieldcommgroup.org "HART PROTOCOL SPECIFICATIONS".

PROFIBUS PA

Shielded twisted-pair cable. Cable type A is recommended.

See https://www.profibus.com "PROFIBUS Installation Guidelines".

FOUNDATION Fieldbus

Twisted, shielded two-wire cable.

For further information on planning and installing FOUNDATION Fieldbus networks see:

- Operating Instructions for "FOUNDATION Fieldbus Overview" (BA00013S)
- FOUNDATION Fieldbus Guideline
- IEC 61158-2 (MBP)

Cable diameter

- Cable glands supplied:
  M20 × 1.5 with cable Φ 6 to 12 mm (0.24 to 0.47 in)
- Plug-in spring terminals for device version without integrated overvoltage protection: wire cross-sections 0.5 to 2.5 mm² (20 to 14 AWG)

Overvoltage protection

The device can be ordered with integrated overvoltage protection:
Order code for "Accessory mounted", option NA "Overvoltage protection"

Input voltage range	Values correspond to supply voltage specifications → 🖹 16 [1)]
Resistance per channel	2 · 0.5 Ω max.
DC sparkover voltage	400 to 700 V
Trip surge voltage	< 800 V
Capacitance at 1 MHz	< 1.5 pF
Nominal discharge current (8/20 µs)	10 kA
Temperature range	–40 to +85 °C (–40 to +185 °F)

1) The voltage is reduced by the amount of the internal resistance $I_{min} \cdot R_i$

Depending on the temperature class, restrictions apply to the ambient temperature for device versions with overvoltage protection .

For detailed information on the temperature tables, see the "Safety Instructions" (XA) for the device.

Performance characteristics

Reference operating conditions

- Error limits based on ISO 11631
- Water
  - +15 to +45 °C (+59 to +113 °F)
  - 2 to 6 bar (29 to 87 psi)
- Data as indicated in the calibration protocol
- Accuracy based on accredited calibration rigs according to ISO 17025

To obtain measured errors, use the *Applicator* sizing tool → 65

Maximum measurement error

o.r. = of reading; 1 g/cm³ = 1 kg/l; T = medium temperature

Base accuracy

Design fundamentals → 24

Mass flow and volume flow (liquids)

±0.25 % o.r.

Mass flow (gases)

±0.50 % o.r.

Density (liquids)

Under reference conditions [g/cm³]	Standard density calibration [g/cm³]
±0.0005	±0.002

Temperature

±0.5 °C ± 0.005 · T °C (±0.9 °F ± 0.003 · (T − 32) °F)

Zero point stability

DN		Zero point stability	
[mm]	[in]	[kg/h]	[lb/min]
8	⅜	0.24	0.0088
15	½	0.78	0.0287
25	1	2.16	0.0794
40	1½	5.40	0.1985
50	2	8.40	0.3087

Flow values

Flow values as turndown parameters depending on nominal diameter.

SI units

DN [mm]	1:1 [kg/h]	1:10 [kg/h]	1:20 [kg/h]	1:50 [kg/h]	1:100 [kg/h]	1:500 [kg/h]
8	2 000	200	100	40	20	4
15	6 500	650	325	130	65	13
25	18 000	1 800	900	360	180	36

DN	1:1	1:10	1:20	1:50	1:100	1:500
[mm]	[kg/h]	[kg/h]	[kg/h]	[kg/h]	[kg/h]	[kg/h]
40	45 000	4 500	2 250	900	450	90
50	70 000	7 000	3 500	1 400	700	140

US units

DN	1:1	1:10	1:20	1:50	1:100	1:500
[inch]	[lb/min]	[lb/min]	[lb/min]	[lb/min]	[lb/min]	[lb/min]
⅜	73.50	7.350	3.675	1.470	0.735	0.147
½	238.9	23.89	11.95	4.778	2.389	0.478
1	661.5	66.15	33.08	13.23	6.615	1.323
1½	1 654	165.4	82.70	33.08	16.54	3.308
2	2 573	257.3	128.7	51.46	25.73	5.146

Accuracy of outputs

The outputs have the following base accuracy specifications:

Current output

Accuracy	±10 µA

Pulse/frequency output

o.r. = of reading

Accuracy	Max. ±100 ppm o.r.

Repeatability

o.r. = of reading; 1 g/cm³ = 1 kg/l; T = medium temperature

Base repeatability

Design fundamentals → 24

Mass flow and volume flow (liquids)

±0.125 % o.r.

Mass flow (gases)

±0.25 % o.r. (up to a Mach number of 0.2)

Density (liquids)

±0.00025 g/cm³

Temperature

±0.25 °C ± 0.0025 · T °C (±0.45 °F ± 0.0015 · (T–32) °F)

Response time

- The response time depends on the configuration (damping).
- Response time in the event of erratic changes in the measured variable: After 500 ms → 95 % of full scale value

Influence of ambient temperature

Current output

o.r. = of reading

Additional error, in relation to the span of 16 mA:

Temperature coefficient at zero point (4 mA)	0.02 %/10 K
Temperature coefficient with span (20 mA)	0.05 %/10 K

Pulse/frequency output

o.r. = of reading

Temperature coefficient	Max. ±100 ppm o.r.

Influence of medium temperature

Mass flow

o.f.s. = of full scale value

If there is a difference between the temperature during zero adjustment and the process temperature, the additional measurement error of the sensors is typically ±0.0002 %o.f.s./°C (±0.0001 % o. f.s./°F).

The influence is reduced when the zero adjustment is performed at process temperature.

Density

If there is a difference between the density calibration temperature and the process temperature, the measurement error of the sensors is typically ±0.0001 g/cm³/°C (±0.00005 g/cm³/°F). Field density adjustment is possible.

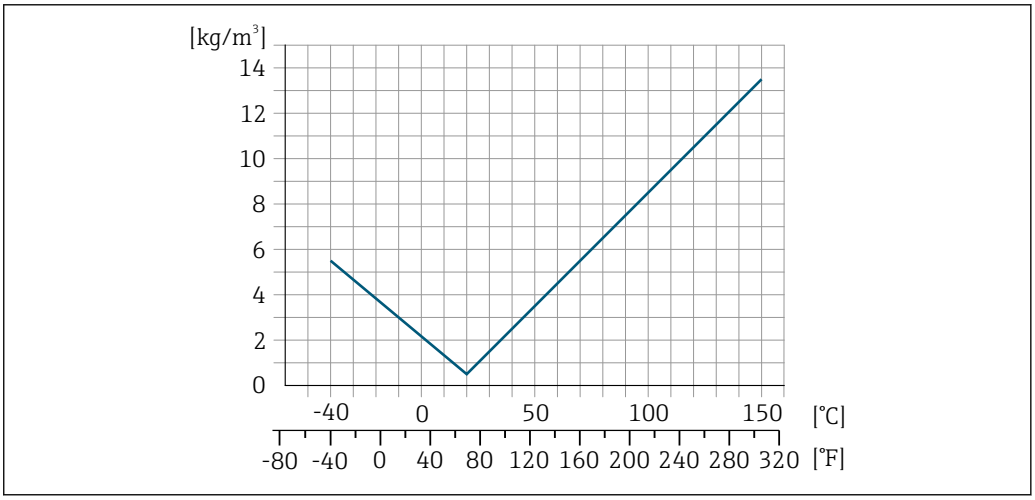

5 *Field density adjustment, for example at +20 °C (+68 °F)*

Temperature

±0.005 · T °C (± 0.005 · (T − 32) °F)

Influence of medium pressure

The following shows how the process pressure (gauge pressure) affects the accuracy of the mass flow.

o.r. = of reading

It is possible to compensate for the effect by:
- Reading in the current pressure measured value via the current input or a digital input.
- Specifying a fixed value for the pressure in the device parameters.

Operating Instructions → 66.

DN		[% o.r./bar]	[% o.r./psi]
[mm]	[in]		
8	3/8	no effect	
15	½	no effect	
25	1	no effect	
40	1½	no effect	
50	2	−0.009	−0.0006

Design fundamentals

o.r. = of reading, o.f.s. = of full scale value

BaseAccu = base accuracy in % o.r., BaseRepeat = base repeatability in % o.r.

MeasValue = measured value; ZeroPoint = zero point stability

Calculation of the maximum measured error as a function of the flow rate

Flow rate	Maximum measured error in % o.r.
$\geq \frac{\text{ZeroPoint}}{\text{BaseAccu}} \cdot 100$ A0021332	$\pm$ BaseAccu A0021339
$< \frac{\text{ZeroPoint}}{\text{BaseAccu}} \cdot 100$ A0021333	$\pm \frac{\text{ZeroPoint}}{\text{MeasValue}} \cdot 100$ A0021334

Calculation of the maximum repeatability as a function of the flow rate

Flow rate	Maximum repeatability in % o.r.
$\geq \frac{4/3 \cdot \text{ZeroPoint}}{\text{BaseAccu}} \cdot 100$ A0021341	$\pm$ ½ · BaseAccu A0021343
$< \frac{4/3 \cdot \text{ZeroPoint}}{\text{BaseAccu}} \cdot 100$ A0021342	$\pm$ 2/3 · $\frac{\text{ZeroPoint}}{\text{MeasValue}} \cdot 100$ A0021344

Example of maximum measurement error

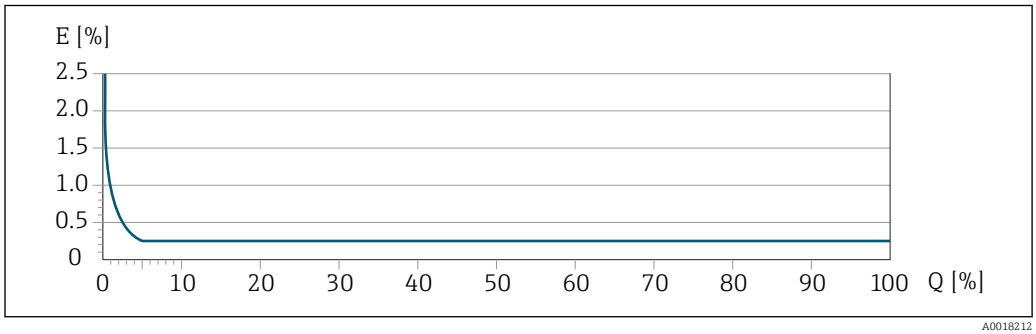

A0018212

E Maximum measurement error in % o.r. (example: DN 25)
Q Flow rate in % of maximum full scale value

Installation

Mounting location

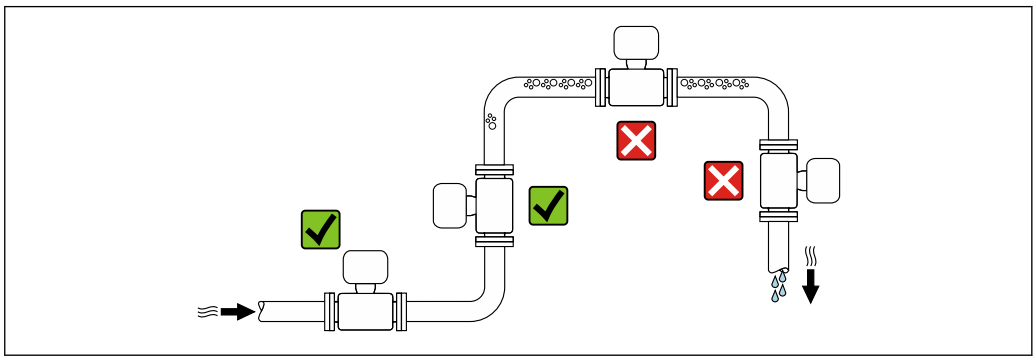

A0028772

To avoid measurement errors caused by gas bubble formation in the measuring tube, avoid the following installation locations in the pipe:
- Highest point of a pipeline
- Directly upstream of a free pipe outlet in a down pipe

Installation in down pipes

However, the following installation suggestion allows for installation in an open vertical pipeline. Pipe restrictions or the use of an orifice with a smaller cross-section than the nominal diameter prevent the sensor running empty while measurement is in progress.

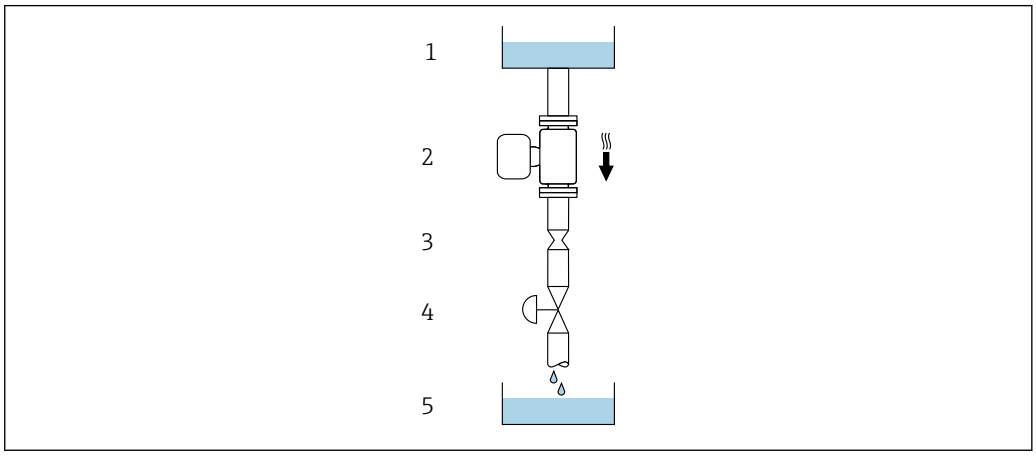

A0028773

6 *Installation in a down pipe (e.g. for batching applications)*

1 *Supply tank*
2 *Sensor*
3 *Orifice plate, pipe restriction*
4 *Valve*
5 *Filling container*

DN/NPS		Ø orifice plate, pipe restriction	
[mm]	[in]	[mm]	[in]
8	⅜	6	0.24
15	½	10	0.40
25	1	14	0.55
40	1 ½	22	0.87
50	2	28	1.10

Orientation

The direction of the arrow on the sensor nameplate helps you to install the sensor according to the flow direction (direction of medium flow through the piping).

Orientation			Recommendation
A	Vertical orientation	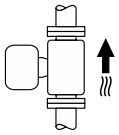 A0015591	✓✓ 1)
B	Horizontal orientation, transmitter at top	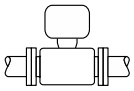 A0015589	✓✓ 2) Exception: → 7, 26
C	Horizontal orientation, transmitter at bottom	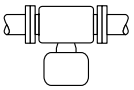 A0015590	✓✓ 3) Exception: → 7, 26
D	Horizontal orientation, transmitter at side	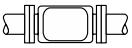 A0015592	✗

1) This orientation is recommended to ensure self-draining.
2) Applications with low process temperatures may reduce the ambient temperature. To maintain the minimum ambient temperature for the transmitter, this orientation is recommended.
3) Applications with high process temperatures may increase the ambient temperature. To maintain the maximum ambient temperature for the transmitter, this orientation is recommended.

If a sensor is installed horizontally with a curved measuring tube, match the position of the sensor to the medium properties.

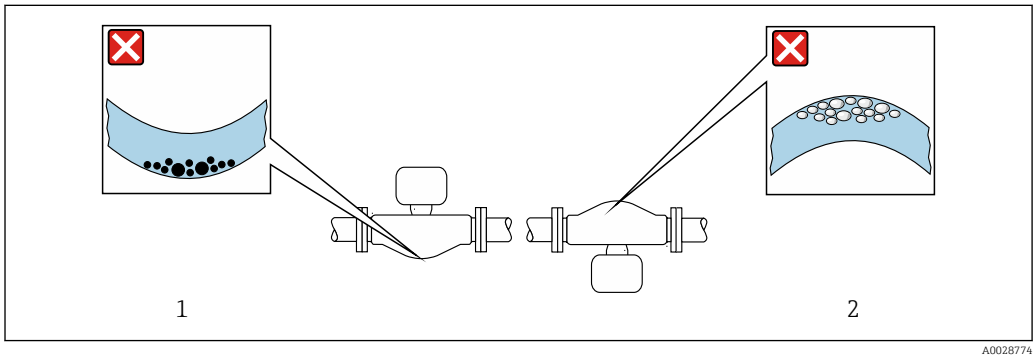

A0028774

7 *Orientation of sensor with curved measuring tube*

1 Avoid this orientation for media with entrained solids: Risk of solids accumulating
2 Avoid this orientation for outgassing media: Risk of gas accumulating

Inlet and outlet runs

No special precautions need to be taken for fittings that create turbulence, such as valves, elbows or T-pieces, as long as no cavitation occurs → 33.

Special installation instructions

Drainability

When installed vertically, the measuring tubes can be drained completely and protected against buildup.

Hygienic compatibility

When installing in hygienic applications, please refer to the information in the "Certificates and approvals/hygienic compatibility" section → 59

Rupture disk

Process-related information: → 33.

⚠ WARNING

Danger from medium escaping!

Medium escaping under pressure can cause injury or material damage.

- ▶ Take precautions to prevent danger to persons and damage if the rupture disk is actuated.
- ▶ Observe the information on the rupture disk sticker.
- ▶ Make sure that the function and operation of the rupture disk is not impeded through the installation of the device.
- ▶ Do not use a heating jacket.
- ▶ Do not remove or damage the rupture disk.

The position of the rupture disk is indicated on a sticker applied over it. If the rupture disk is triggered, the sticker is destroyed. The disk can therefore be visually monitored.

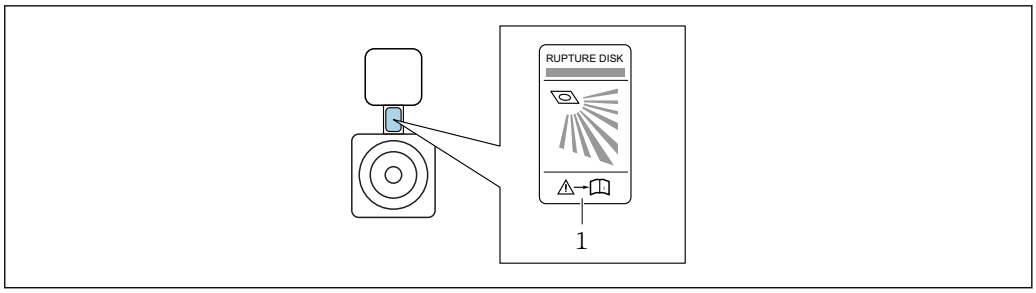

A0032051

1 Rupture disk label

Zero point verification and zero adjustment

All measuring instruments are calibrated in accordance with state-of-the-art technology. Calibration takes place under reference conditions → 🖹 21. Therefore, a zero adjustment in the field is generally not required.

Experience shows that zero adjustment is advisable only in special cases:

- To achieve maximum measurement accuracy even with low flow rates.
- Under extreme process or operating conditions (e.g. very high process temperatures or very high-viscosity media).
- For gas applications with low pressure.

For information on checking the zero point and performing a zero adjustment, see the Operating Instructions for the device.

To achieve the highest possible measurement accuracy at low flow rates, the installation must protect the sensor from mechanical stress during operation.

Environment

Ambient temperature range

Measuring instrument	−40 to +60 °C (−40 to +140 °F)
Readability of the local display	−20 to +60 °C (−4 to +140 °F) The readability of the display may be impaired at temperatures outside the temperature range.

- ▶ If operating outdoors:
  Avoid direct sunlight, particularly in warm climatic regions.

You can order a weather protection cover from Endress+Hauser. → 🖹 63.

Storage temperature

−40 to +80 °C (−40 to +176 °F), preferably at +20 °C (+68 °F)

Climate class

DIN EN 60068-2-38 (test Z/AD)

Degree of protection

Transmitter
- Standard: IP66/67, type 4X enclosure, suitable for pollution degree 4
- When the housing is open: IP20, type 1 enclosure, suitable for pollution degree 2
- Display module: IP20, type 1 enclosure, suitable for pollution degree 2

Sensor
IP66/67, Type 4X [1] enclosure, suitable for pollution degree 4

Device plug
IP67, only in screwed situation

Vibration resistance and shock resistance

Sinusoidal vibration similar to IEC 60068-2-6
- 2 to 8.4 Hz, 3.5 mm peak
- 8.4 to 2 000 Hz, 1 g peak

Broadband random vibration similar to IEC 60068-2-64
- 10 to 200 Hz, 0.003 g^2/Hz
- 200 to 2 000 Hz, 0.001 g^2/Hz
- Total: 1.54 g rms

Half-sine shocks similar to IEC 60068-2-27

6 ms 30 g

Rough handling shocks similar to IEC 60068-2-31

Electromagnetic compatibility (EMC)
- As per IEC/EN 61326 and NAMUR Recommendation 21 (NE 21), NAMUR Recommendation 21 (NE 21) is fulfilled when the device is installed in accordance with NAMUR Recommendation 98 (NE 98).
- As per IEC/EN 61000-6-2 and IEC/EN 61000-6-4

Details are provided in the Declaration of Conformity.

This unit is not intended for use in residential environments and cannot guarantee adequate protection of the radio reception in such environments.

Process

Medium temperature range

−40 to +150 °C (−40 to +302 °F)

Medium density

0 to 2 000 kg/m^3 (0 to 125 lb/cf)

Pressure/temperature ratings

The following pressure/temperature diagrams apply to all pressure-bearing parts of the device and not just the process connection. The diagrams show the maximum permissible medium pressure depending on the specific medium temperature.

1) Type 4X is not used when a pressure measuring cell is installed.

Flange similar to EN 1092-1 (DIN 2501)

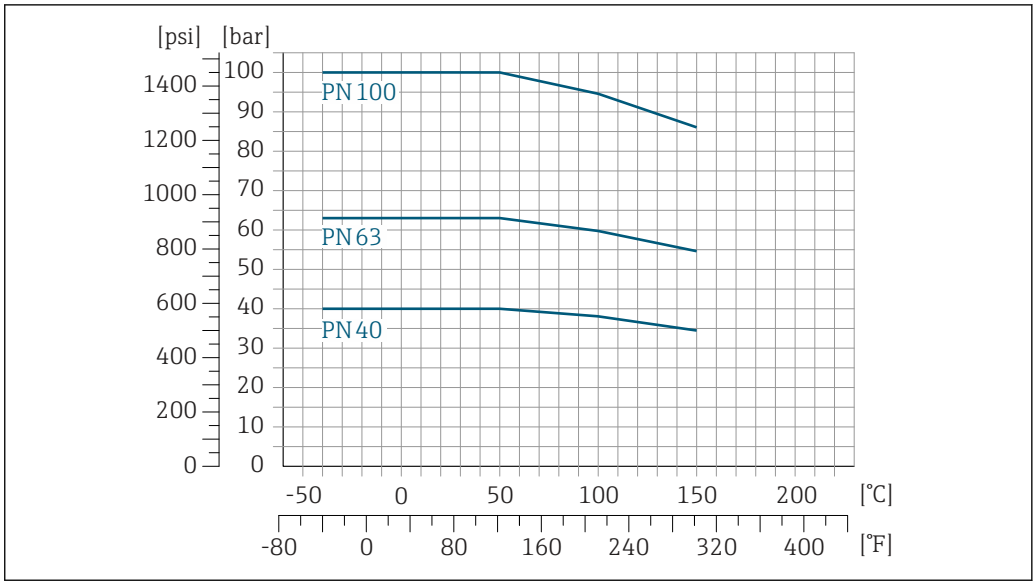

8 *With flange material 1.4404 (F316/F316L)*

Flange similar to ASME B16.5

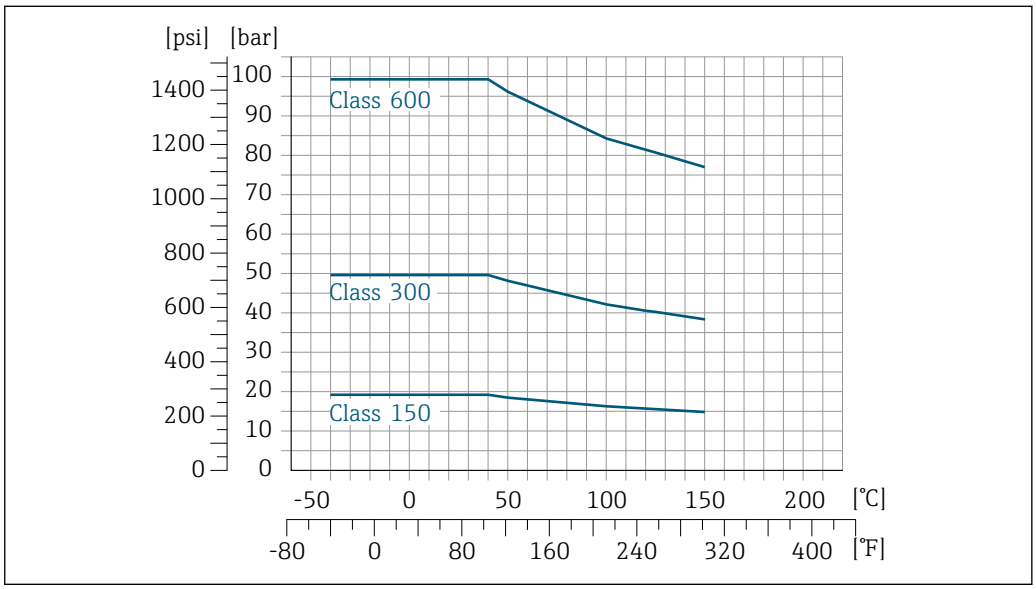

9 *With flange material 1.4404 (F316/F316L)*

Flange JIS B2220

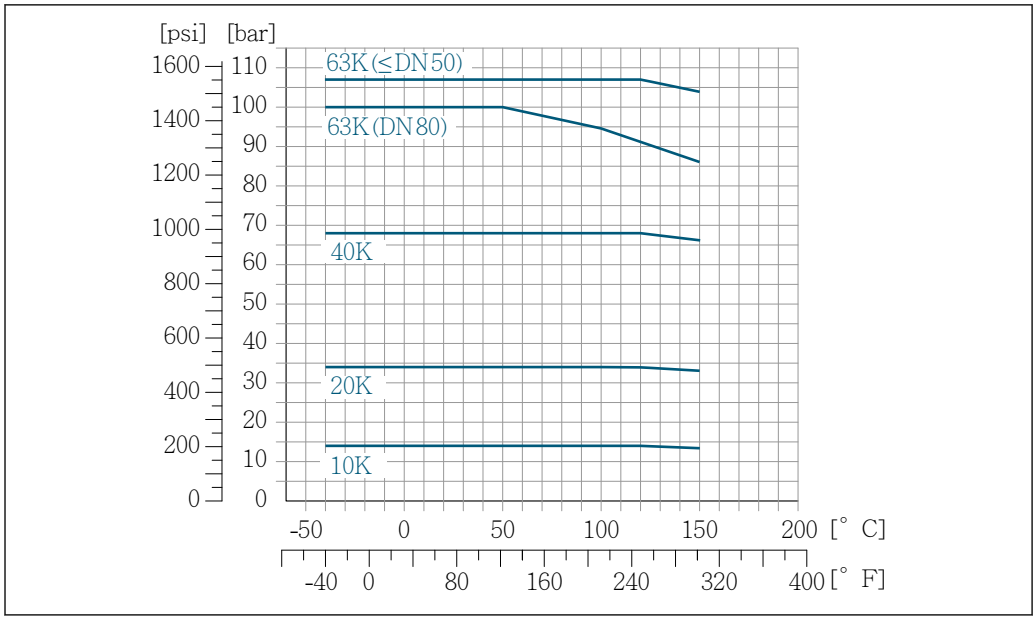

10 *With flange material 1.4404 (F316/F316L)*

Flange DIN 11864-2 Form A

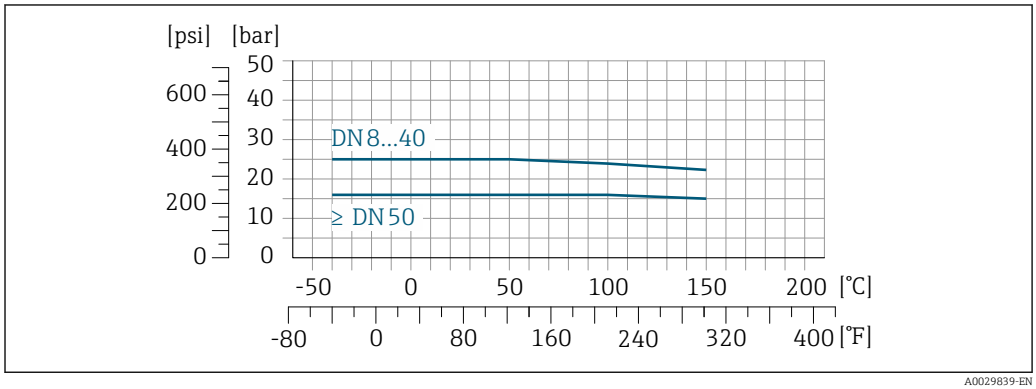

11 *With flange material 1.4404 (316/316L)*

Threaded adapter DIN 11851

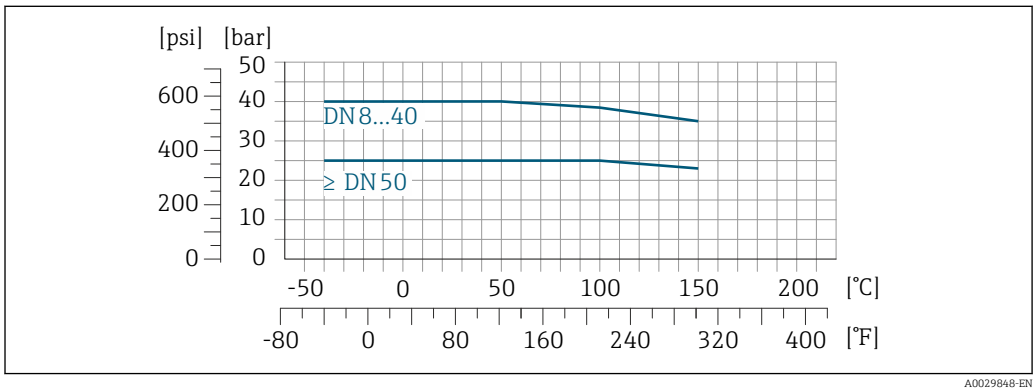

12 *With connection material 1.4404 (316/316L)*

DIN 11851 allows for applications up to +140 °C (+284 °F) if suitable sealing materials are used. Please take this into account when selecting seals and counterparts, as these components can limit the pressure and temperature range.

Threaded adapter DIN 11864-1 Form A

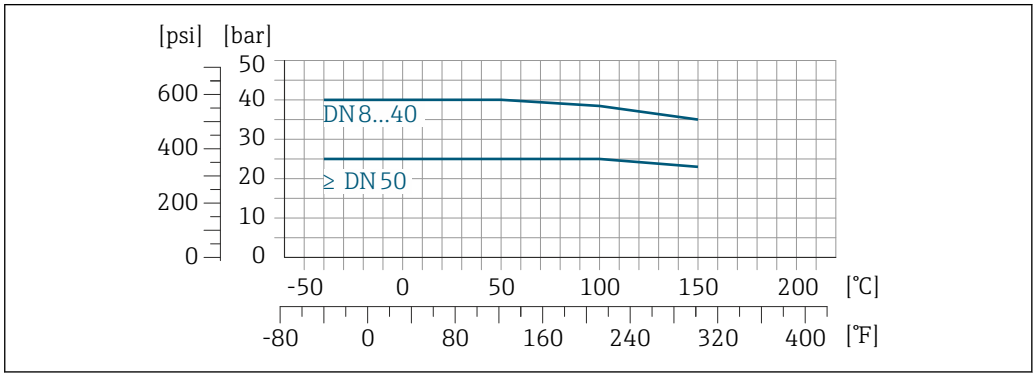

13 *With connection material 1.4404 (316/316L)*

Threaded adapter ISO 2853

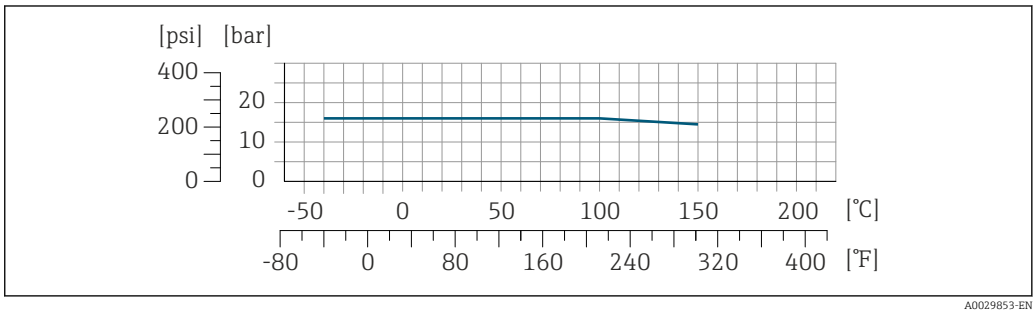

14 *With connection material 1.4404 (316/316L)*

Threaded adapter SMS 1145

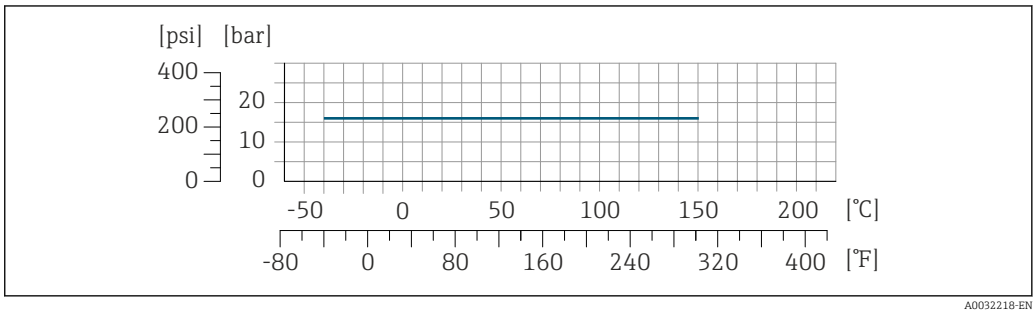

15 *With connection material 1.4404 (316/316L)*

SMS 1145 allows for applications up to 16 bar (232 psi) if suitable sealing materials are used. Please take this into account when selecting seals and counterparts, as these components can limit the pressure and temperature range.

VCO

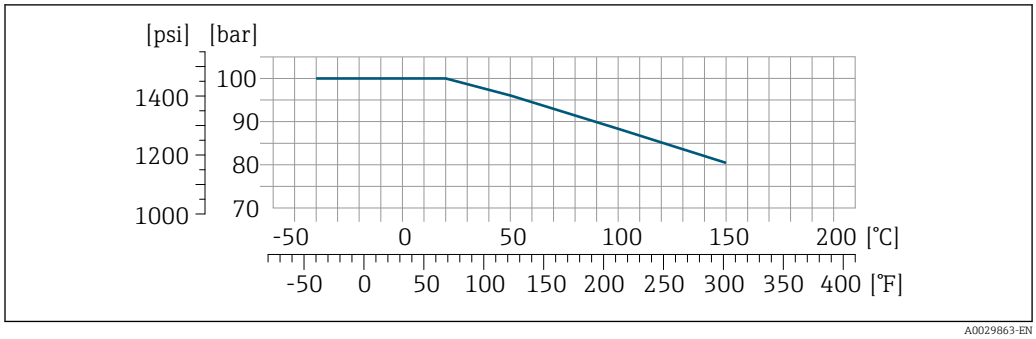

16 *With connection material 1.4404 (316/316L)*

Tri-Clamp

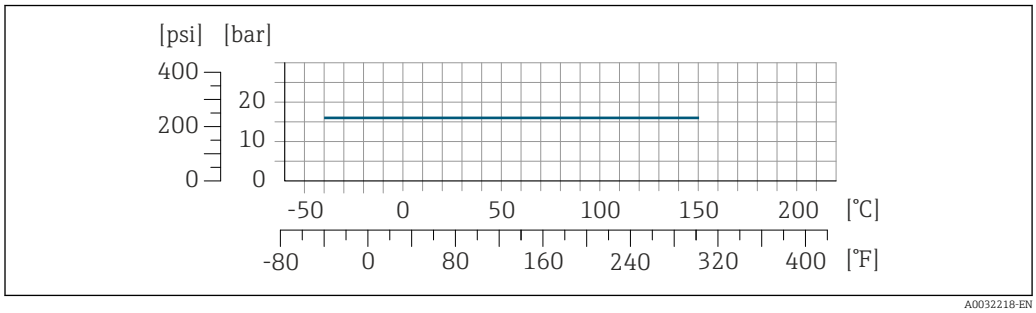

The clamp connections are suitable up to a maximum pressure of 16 bar (232 psi). Please observe the operating limits of the clamp and seal used as they can be over 16 bar (232 psi). The clamp and seal are not included in the scope of supply.

Sensor housing

The sensor housing is filled with dry nitrogen gas and protects the electronics and mechanics inside.

If a measuring tube fails (e.g. due to process characteristics like corrosive or abrasive fluids), the fluid will initially be contained by the sensor housing.

In the event of a tube failure, the pressure level inside the sensor housing will rise according to the operating process pressure. If the user judges that the sensor housing burst pressure does not provide an adequate safety margin, the device can be fitted with a rupture disk. This prevents excessively high pressure from forming inside the sensor housing. Therefore, the use of a rupture disk is strongly recommended in applications involving high gas pressures, and particularly in applications in which the process pressure is greater than 2/3 of the sensor housing burst pressure.

Burst pressure of the sensor housing

If the device is fitted with a rupture disk (order code for "Sensor option", option CA "Rupture disk"), the rupture disk trigger pressure is decisive .

The sensor housing burst pressure refers to a typical internal pressure which is reached prior to mechanical failure of the sensor housing and which was determined during type testing. The corresponding type test declaration can be ordered with the device (order code for "Additional approval", option LN "Sensor housing burst pressure, type test").

DN		Sensor housing burst pressure	
[mm]	[in]	[bar]	[psi]
8	3/8	250	3620
15	½	250	3620
25	1	250	3620
40	1½	200	2900

DN		Sensor housing burst pressure	
[mm]	[in]	[bar]	[psi]
50	2	180	2 610
80	3	120	1 740

For information on the dimensions: see the "Mechanical construction" section

Rupture disk

To increase the level of safety, a device version with a rupture disk with a trigger pressure of 10 to 15 bar (145 to 217.5 psi) can be used (order code for "Sensor option", option CA "rupture disk").

The use of rupture disks cannot be combined with the separately available heating jacket.

Internal cleaning

- CIP cleaning
- SIP cleaning

Options
Oil- and grease-free version for wetted parts, without declaration
Order code for "Service", option HA [2)]

Flow limit

Select the nominal diameter by optimizing between the required flow range and permissible pressure loss.

For an overview of the full scale values for the measuring range, see the "Measuring range" section → 8

- The minimum recommended full scale value is approx. 1/20 of the maximum full scale value
- For the most common applications, 20 to 50 % of the maximum full scale value can be considered ideal
- A low full scale value must be selected for abrasive media (such as liquids with entrained solids): flow velocity < 1 m/s (< 3 ft/s).
- For gas measurement the following rules apply:
  - The flow velocity in the measuring tubes should not exceed half the speed of sound (0.5 Mach)
  - The maximum mass flow depends on the density of the gas: formula

To calculate the flow limit, use the *Applicator* sizing tool → 65

Pressure loss

To calculate the pressure loss, use the *Applicator* sizing tool → 65

Static pressure

It is important that cavitation does not occur, or that gases entrained in the liquids do not outgas. This is prevented by means of a sufficiently high static pressure.

For this reason, the following mounting locations are recommended:
- At the lowest point in a vertical pipe
- Downstream from pumps (no danger of vacuum)

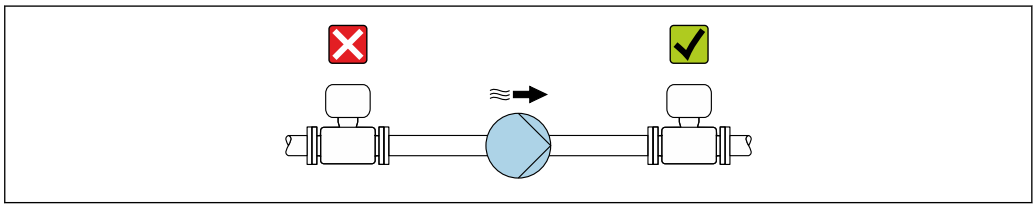

A0028777

Thermal insulation

In the case of some fluids, it is important to keep the heat radiated from the sensor to the transmitter to a low level. A wide range of materials can be used for the required insulation.

2) Cleaning only refers to the measuring instrument. Any accessories that have been supplied are not cleaned.

NOTICE

Electronics overheating on account of thermal insulation!

- Recommended orientation: horizontal orientation, transmitter housing pointing downwards.
- Do not insulate the transmitter housing .
- Maximum permissible temperature at the lower end of the transmitter housing: 80 °C (176 °F)
- Thermal insulation with exposed extension neck: We recommend that you do not insulate the extension neck in order to ensure optimum dissipation of heat.

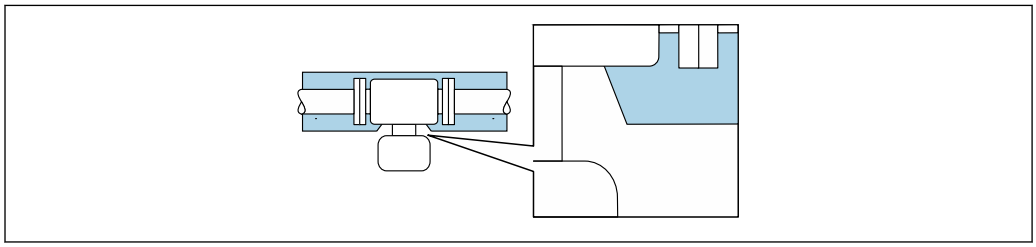

A0034391

17 *Thermal insulation with exposed extension neck*

Heating

Some media require suitable measures to avoid loss of heat at the sensor.

Heating options

- Electrical heating, e.g. with electric band heaters [3)]
- Via pipes carrying hot water or steam
- Via heating jackets

Heating jackets for the sensors can be ordered as accessories from Endress+Hauser → 64.

NOTICE

Danger of overheating when heating

- Ensure that the temperature at the lower end of the transmitter housing does not exceed 80 °C (176 °F).
- Ensure that sufficient convection takes place at the transmitter neck.
- Ensure that a sufficiently large area of the transmitter neck remains exposed. The uncovered part serves as a radiator and protects the electronics from overheating and excessive cooling.
- When using in potentially explosive atmospheres, observe the information in the device-specific Ex documentation. For detailed information on the temperature tables, see the separate document entitled "Safety Instructions" (XA) for the device.
- Consider the behavior of the process diagnostics "830 Ambient temperature too high" and "832 Electronics temperature too high" if overheating cannot be avoided by a suitable system design.

Vibrations

The high oscillation frequency of the measuring tubes ensures that the correct operation of the measuring system is not influenced by plant vibrations.

3) The use of parallel electric band heaters is generally recommended (bidirectional electricity flow). Particular considerations must be made if a single-wire heating cable is to be used. Additional information is provided in the document EA01339D "Installation instructions for electrical trace heating systems" → 67

Mechanical construction

Dimensions in SI units

Compact version

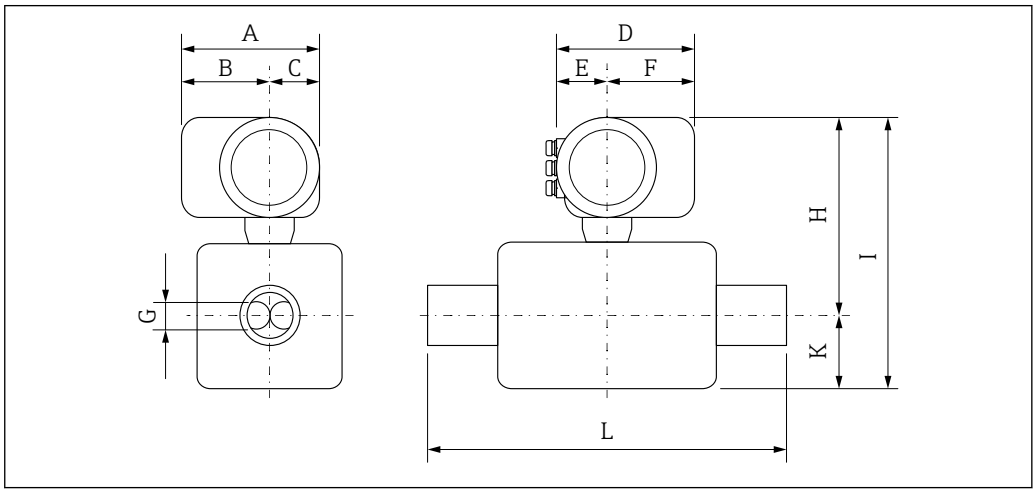

A0029786

Dimensions for version without overvoltage protection

Order code for "Housing", option C "GT20 two-chamber aluminum coated"

DN [mm]	A [1] [mm]	B [1] [mm]	C [mm]	D [2] [mm]	E [mm]	F [2] [mm]	G [mm]	H [3] [mm]	I [3] [mm]	K [mm]	L [mm]
8	162	102	60	165	75	90	5.35	261	350	89	[4]
15	162	102	60	165	75	90	8.30	261	361	100	[4]
25	162	102	60	165	75	90	12.0	258	360	102	[4]
40	162	102	60	165	75	90	17.6	264	384	121	[4]
50	162	102	60	165	75	90	26.0	278	453	176	[4]

1) For version without local display: values - 7 mm
2) For version with overvoltage protection: values + 8 mm
3) For version without local display: values - 3 mm
4) Depends on the particular process connection

Flange connections

Fixed flange EN 1092-1, ASME B16.5, JIS B2220

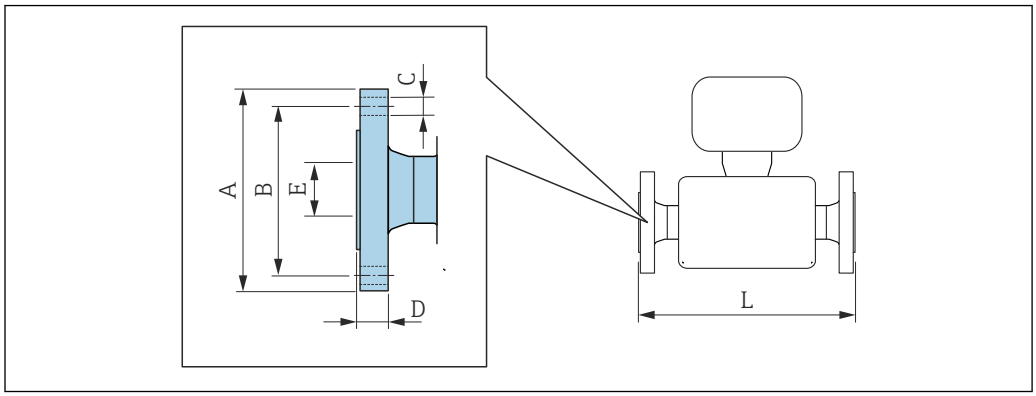

A0015621

Length tolerance for dimension L in mm:
+1.5/−2.0

Flange similar to EN 1092-1 (DIN 2501/DIN 2512N), PN 40
1.4404 (F316/F316L): *order code for "Process connection", option* **D2S**

Flange with groove similar to EN 1092-1 Form D (DIN 2512N), PN 40
1.4404 (F316/F316L): *order code for "Process connection", option* **D6S**

DN [mm]	A [mm]	B [mm]	C [mm]	D [mm]	E [mm]	L [mm]
8 [1]	95	65	4 × Ø14	16	17.3	232/510 [2]
15	95	65	4 × Ø14	16	17.3	279/510 [2]
25	115	85	4 × Ø14	18	28.5	329/600 [2]
40	150	110	4 × Ø18	18	43.1	445
50	165	125	4 × Ø18	20	54.5	556/715 [2]
Surface roughness (flange): EN 1092-1 Form B1 (DIN 2526 Form C), Ra 3.2 to 12.5 µm						

1) DN 8 with DN 15 flanges as standard
2) Installed length in accordance with NAMUR recommendation NE 132 optionally available (order code for "Process connection", option D2N or D6N (with groove))

Flange similar to EN 1092-1 (DIN 2501), PN 40 (with DN 25 flanges)
1.4404 (F316/F316L)
Order code for "Process connection", option **R2S**

DN [mm]	A [mm]	B [mm]	C [mm]	D [mm]	E [mm]	L [mm]
8	115	85	4 × Ø14	18	28.5	329
15	115	85	4 × Ø14	18	28.5	329
Surface roughness (flange): EN 1092-1 Form B1 (DIN 2526 Form C), Ra 3.2 to 12.5 µm						

Flange similar to EN 1092-1 (DIN 2501/DIN 2512N), PN 63
1.4404 (F316/F316L): *order code for "Process connection", option* **D3S**

Flange with groove similar to EN 1092-1 Form D (DIN 2512N), PN 63
1.4404 (F316/F316L): *order code for "Process connection", option* **D7S**

DN [mm]	A [mm]	B [mm]	C [mm]	D [mm]	E [mm]	L [mm]
50	180	135	4 × Ø22	26	54.5	565

Surface roughness (flange): EN 1092-1 Form B2 (DIN 2526 Form E), Ra 0.8 to 3.2 µm

Flange similar to EN 1092-1 (DIN 2501/DIN 2512N), PN 100
1.4404 (F316/F316L)
Order code for "Process connection", option **D4S**

Flange with groove similar to EN 1092-1 Form D (DIN 2512N) available, PN 100
1.4404 (F316/F316L)
Order code for "Process connection", option **D8S**

DN [mm]	A [mm]	B [mm]	C [mm]	D [mm]	E [mm]	L [mm]
8 [1)]	105	75	4 × Ø14	20	17.3	261
15	105	75	4 × Ø14	20	17.3	295
25	140	100	4 × Ø18	24	28.5	360
40	170	125	4 × Ø22	26	42.5	486
50	195	145	4 × Ø26	28	53.9	581

Surface roughness (flange): EN 1092-1 Form B2 (DIN 2526 Form E), Ra 0.8 to 3.2 µm

1) DN 8 with DN 15 flanges as standard

Flange similar to ASME B16.5, Class 150
1.4404 (F316/F316L)
Order code for "Process connection", option **AAS**

DN [mm]	A [mm]	B [mm]	C [mm]	D [mm]	E [mm]	L [mm]
8 [1)]	90	60.3	4 × Ø15.7	11.2	15.7	232
15	90	60.3	4 × Ø15.7	11.2	15.7	279
25	110	79.4	4 × Ø15.7	14.2	26.7	329
40	125	98.4	4 × Ø15.7	17.5	40.9	445
50	150	120.7	4 × Ø19.1	19.1	52.6	556

Surface roughness (flange): Ra 3.2 to 6.3 µm

1) DN 8 with DN 15 flanges as standard

Flange similar to ASME B16.5, Class 300
1.4404 (F316/F316L)
Order code for "Process connection", option **ABS**

DN [mm]	A [mm]	B [mm]	C [mm]	D [mm]	E [mm]	L [mm]
8 [1)]	95	66.7	4 × Ø15.7	14.2	15.7	232
15	95	66.7	4 × Ø15.7	14.2	15.7	279
25	125	88.9	4 × Ø19.0	17.5	26.7	329
40	155	114.3	4 × Ø22.3	20.6	40.9	445

Flange similar to ASME B16.5, Class 300
1.4404 (F316/F316L)
Order code for "Process connection", option **ABS**

DN [mm]	A [mm]	B [mm]	C [mm]	D [mm]	E [mm]	L [mm]
50	165	127	8 × Ø19.0	22.3	52.6	556
Surface roughness (flange): Ra 3.2 to 6.3 µm						

1) DN 8 with DN 15 flanges as standard

Flange similar to ASME B16.5, Class 600
1.4404 (F316/F316L)
Order code for "Process connection", option **ACS**

DN [mm]	A [mm]	B [mm]	C [mm]	D [mm]	E [mm]	L [mm]
8 [1)]	95	66.7	4 × Ø15.7	20.6	13.9	261
15	95	66.7	4 × Ø15.7	20.6	13.9	295
25	125	88.9	4 × Ø19.1	23.9	24.3	380
40	155	114.3	4 × Ø22.4	28.7	38.1	496
50	165	127	8 × Ø19.1	31.8	49.2	583
Surface roughness (flange): Ra 3.2 to 6.3 µm						

1) DN 8 with DN 15 flanges as standard

Flange JIS B2220, 10K
1.4404 (F316/F316L)
Order code for "Process connection", option **NDS**

DN [mm]	A [mm]	B [mm]	C [mm]	D [mm]	E [mm]	L [mm]
50	155	120	4 × Ø19	16	50	556
Surface roughness (flange): Ra 3.2 to 6.3 µm						

Flange JIS B2220, 20K
1.4404 (F316/F316L)
Order code for "Process connection", option **NES**

DN [mm]	A [mm]	B [mm]	C [mm]	D [mm]	E [mm]	L [mm]
8 [1)]	95	70	4 × Ø15	14	15	232
15	95	70	4 × Ø15	14	15	279
25	125	90	4 × Ø19	16	25	329
40	140	105	4 × Ø19	18	40	445
50	155	120	8 × Ø19	18	50	556
Surface roughness (flange): Ra 3.2 to 6.3 µm						

1) DN 8 with DN 15 flanges as standard

Flange JIS B2220, 40K
1.4404 (F316/F316L)
Order code for "Process connection", option **NGS**

DN [mm]	A [mm]	B [mm]	C [mm]	D [mm]	E [mm]	L [mm]
8 [1]	115	80	4 × Ø19	20	15	261
15	115	80	4 × Ø19	20	15	300
25	130	95	4 × Ø19	22	25	375
40	160	120	4 × Ø23	24	38	496
50	165	130	8 × Ø19	26	50	601
Surface roughness (flange): Ra 3.2 to 6.3 µm						

1) DN 8 with DN 15 flanges as standard

Flange JIS B2220, 63K
1.4404 (F316/F316L)
Order code for "Process connection", option **NHS**

DN [mm]	A [mm]	B [mm]	C [mm]	D [mm]	E [mm]	L [mm]
8 [1]	120	85	4 × Ø19	23	12	282
15	120	85	4 × Ø19	23	12	315
25	140	100	4 × Ø23	27	22	383
40	175	130	4 × Ø25	32	35	515
50	185	145	4 × Ø23	34	48	616
Surface roughness (flange): Ra 3.2 to 6.3 µm						

1) DN 8 with DN 15 flanges as standard

Fixed flange DIN 11864-2

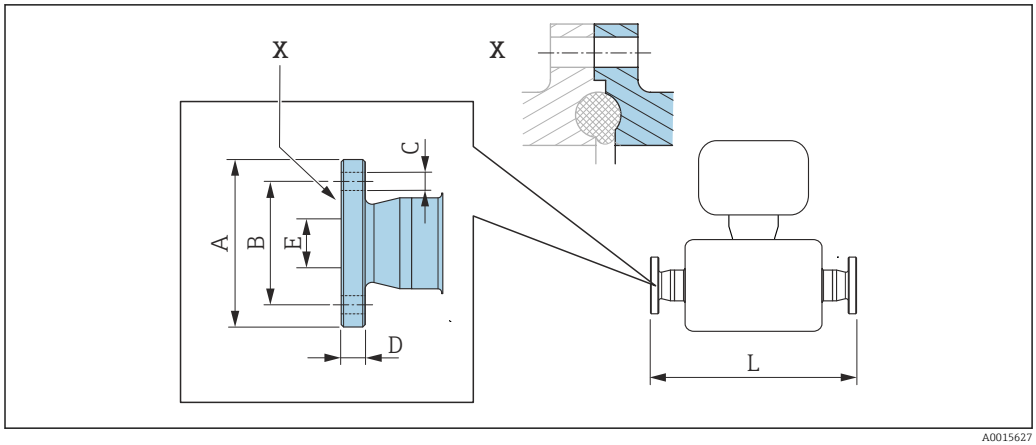

18 Detail X: Asymmetrical process connection; the part shown in blue is provided by the supplier.

Length tolerance for dimension L in mm:
+1.5/−2.0

Flange DIN11864-2 Form A, for pipe according to DIN11866 series A, flange with notch 1.4404 (316/316L) *Order code for "Process connection", option* **KCS**						
DN [mm]	**A [mm]**	**B [mm]**	**C [mm]**	**D [mm]**	**E [mm]**	**L [mm]**
8 [1]	54	37	4 × Ø9	10	10	249
15	59	42	4 × Ø9	10	16	293
25	70	53	4 × Ø9	10	26	344
40	82	65	4 × Ø9	10	38	456
50	94	77	4 × Ø9	10	50	562
3-A version available: order code for "Additional approval", option LP in conjunction with Ra ≤ 0.76 µm: order code for "Measuring tube material", option SB, SJ Ra ≤ 0.38 µm: order code for "Measuring tube material", option SC, SK						

1) DN 8 with DN 10 flanges as standard

Clamp connections

Tri-Clamp

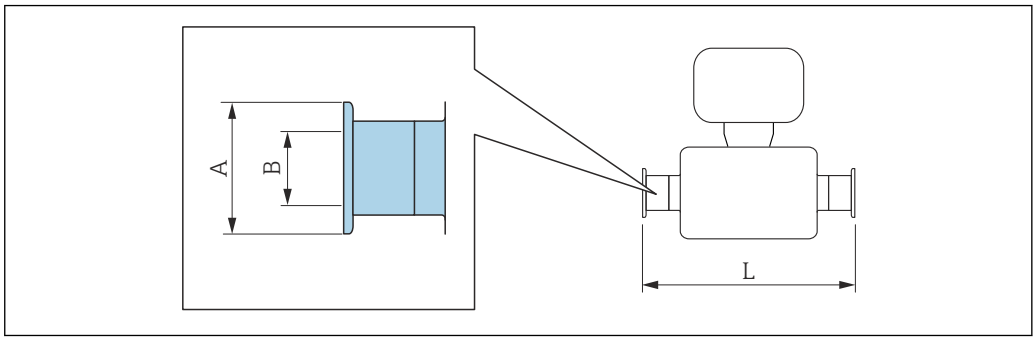

Length tolerance for dimension L in mm:
+1.5/−2.0

Tri-Clamp (½"), for pipe according to DIN 11866 series C
1.4404 (316/316L)
Order code for "Process connection", option **FDW**

DN [mm]	Clamp [in]	A [mm]	B [mm]	L [mm]
8	½	25.0	9.5	229
15	½	25.0	9.5	273

3-A version available: order code for "Additional approval", option LP in conjunction with
Ra ≤ 0.76 µm: order code for "Measuring tube material", option SB, SJ
Ra ≤ 0.38 µm: order code for "Measuring tube material", option SC, SK

Tri-Clamp (≥ 1"), for pipe according to DIN 11866 series C
1.4404 (316/316L)
Order code for "Process connection", option **FTS**

DN [mm]	Clamp [in]	A [mm]	B [mm]	L [mm]
8	1	50.4	22.1	229
15	1	50.4	22.1	273
25	1	50.4	22.1	324
40	1½	50.4	34.8	456
50	2	63.9	47.5	562

3-A version available: order code for "Additional approval", option LP in conjunction with
Ra ≤ 0.76 µm: order code for "Measuring tube material", option SB, SJ
Ra ≤ 0.38 µm: order code for "Measuring tube material", option SC, SK

Threaded couplings

Threaded adapter DIN 11851, DIN11864-1, SMS 1145

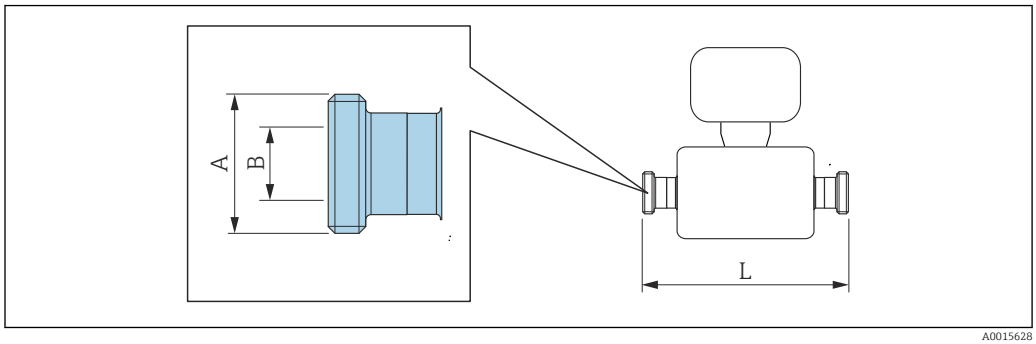

A0015628

Length tolerance for dimension L in mm:
+1.5/−2.0

Threaded adapter DIN 11851, for pipe according to DIN11866 series A
1.4404 (316/316L)
Order code for "Process connection", option **FMW**

DN [mm]	A [in]	B [mm]	L [mm]
8	Rd 34 × 1/8	16	229
15	Rd 34 × 1/8	16	273
25	Rd 52 × 1/6	26	324
40	Rd 65 × 1/6	38	456
50	Rd 78 × 1/6	50	562

3-A version available: order code for "Additional approval", option LP in conjunction with
Ra ≤ 0.76 µm: order code for "Measuring tube material", option SB, SJ
Ra ≤ 0.38 µm: order code for "Measuring tube material", option SC, SK

Threaded adapter DIN11864-1 Form A, for pipe according to DIN11866 series A
1.4404 (316/316L)
Order code for "Process connection", option **FLW**

DN [mm]	A [in]	B [mm]	L [mm]
8	Rd 28 × 1/8	10	229
15	Rd 34 × 1/8	16	273
25	Rd 52 × 1/6	26	324
40	Rd 65 × 1/6	38	456
50	Rd 78 × 1/6	50	562

3-A version available: order code for "Additional approval", option LP in conjunction with
Ra ≤ 0.76 µm: order code for "Measuring tube material", option SB, SJ
Ra ≤ 0.38 µm: order code for "Measuring tube material", option SC, SK

Threaded adapter SMS 1145
1.4404 (316/316L)
Order code for "Process connection", option **SCS**

DN [mm]	A [in]	B [mm]	L [mm]
8	Rd 40 × ⅙	22.5	229
15	Rd 40 × ⅙	22.5	273
25	Rd 40 × ⅙	22.5	324
40	Rd 60 × ⅙	35.5	456
50	Rd 70 × ⅙	48.5	562

3-A version available: order code for "Additional approval", option LP in conjunction with
Ra ≤ 0.76 µm: order code for "Measuring tube material", option SB, SJ
Ra ≤ 0.38 µm: order code for "Measuring tube material", option SC, SK

Threaded adapter ISO 2853

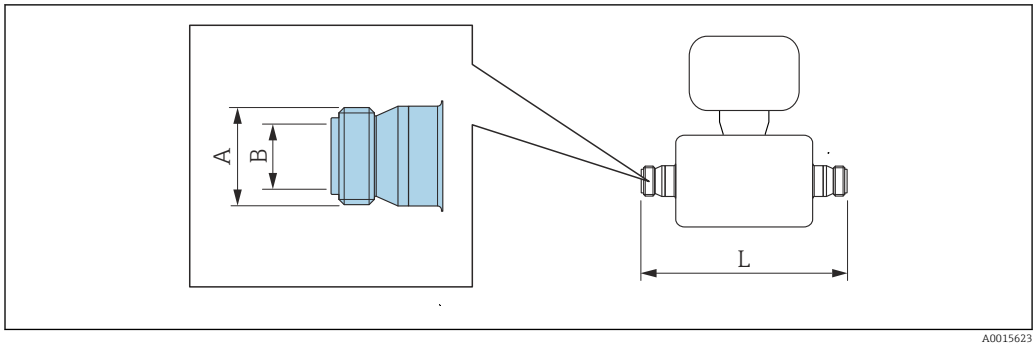

Length tolerance for dimension L in mm:
+1.5/−2.0

Threaded adapter ISO 2853, for pipe according to ISO 2037 **1.4404 (316/316L)** *Order code for "Process connection", option* **JSF**			
DN **[mm]**	**A** [1] **[mm]**	**B** **[mm]**	**L** **[mm]**
8	37.13	22.6	229
15	37.13	22.6	273
25	37.13	22.6	324
40	50.68	35.6	456
50	64.16	48.6	562
3-A version available: order code for "Additional approval", option LP in conjunction with Ra ≤ 0.76 µm: order code for "Measuring tube material", option SB, SJ Ra ≤ 0.38 µm: order code for "Measuring tube material", option SC, SK			

1) Max. thread diameter according to ISO 2853 Annex A

VCO

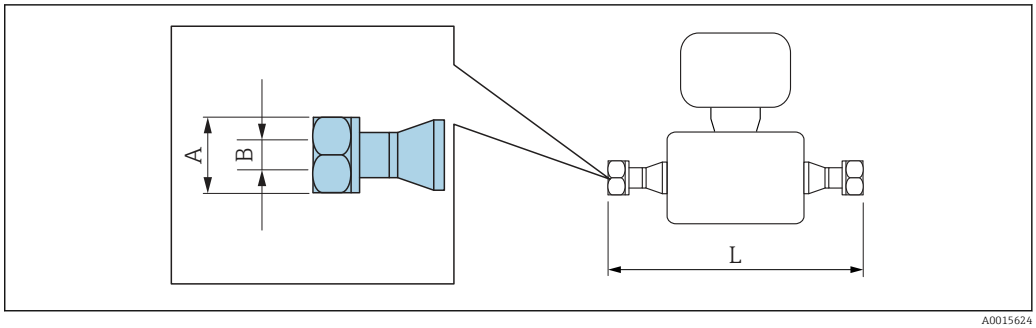

A0015624

Length tolerance for dimension L in mm:
+1.5/−2.0

8-VCO-4 (½") **1.4404 (316/316L)** *Order code for "Process connection", option* **CVS**			
DN **[mm]**	**A** **[in]**	**B** **[mm]**	**L** **[mm]**
8	AF 1	10.2	252

12-VCO-4 (¾") **1.4404 (316/316L)** *Order code for "Process connection", option* **CWS**			
DN **[mm]**	**A** **[in]**	**B** **[mm]**	**L** **[mm]**
15	AF 1½	15.7	305

Dimensions in US units

Compact version

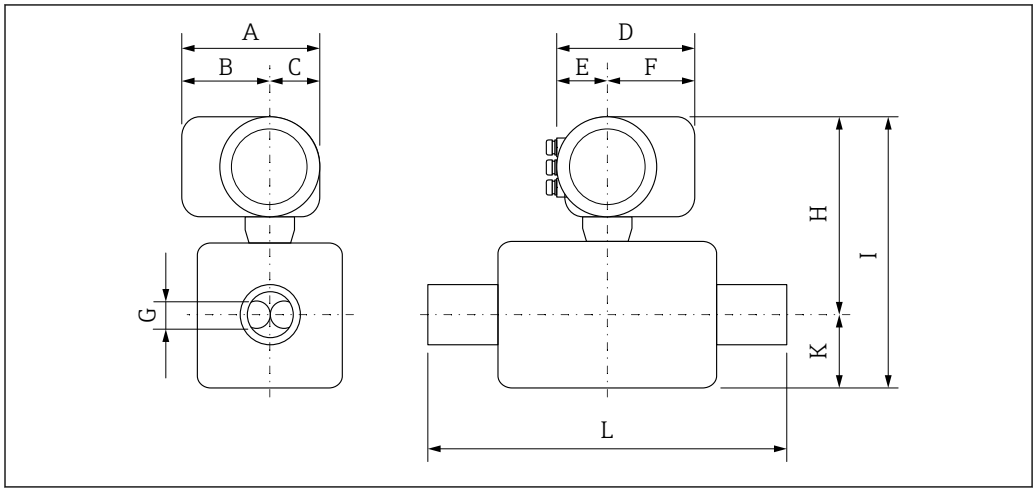

A0029786

Dimensions for version without overvoltage protection

Order code for "Housing", option C "GT20 two-chamber aluminum coated"

DN [in]	A [1] [in]	B [1] [in]	C [in]	D [2] [in]	E [in]	F [2] [in]	G [in]	H [3] [in]	I [3] [in]	K [in]	L [in]
8	6.38	4.02	2.36	6.5	2.95	3.54	0.21	10.28	13.78	3.5	4)
15	6.38	4.02	2.36	6.5	2.95	3.54	0.33	10.28	14.21	3.94	4)
25	6.38	4.02	2.36	6.5	2.95	3.54	0.47	10.16	14.17	4.02	4)
40	6.38	4.02	2.36	6.5	2.95	3.54	0.69	10.39	15.12	4.76	4)
50	6.38	4.02	2.36	6.5	2.95	3.54	1.02	10.94	17.83	6.93	4)

1) For version without local display: values - 0.28 in
2) For version with overvoltage protection: values + 0.31 in
3) For version without local display: values - 0.11 in
4) Depends on the particular process connection

Flange connections

Fixed flange ASME B16.5

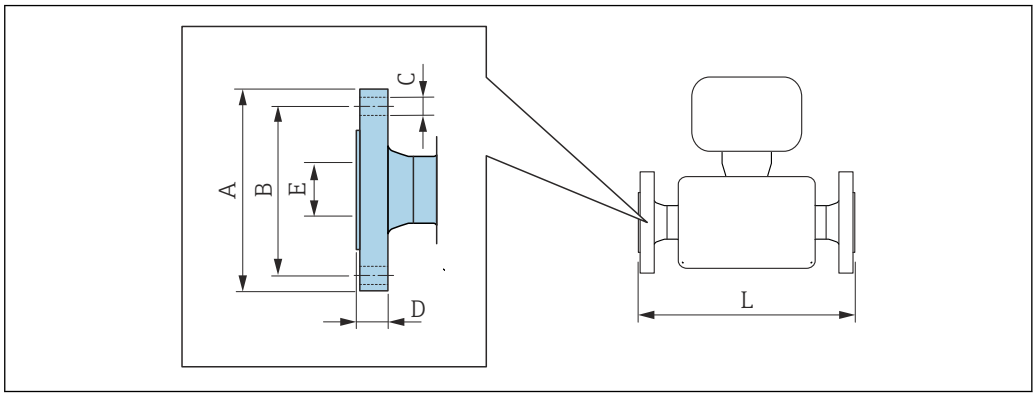

A0015621

Length tolerance for dimension L in inches:
+0.06/−0.08

Flange similar to ASME B16.5, Cl 150 1.4404 (F316/F316L) *Order code for "Process connection", option* **AAS**						
DN [in]	**A [in]**	**B [in]**	**C [in]**	**D [in]**	**E [in]**	**L [in]**
⅜ 1)	3.54	2.37	4 × Ø0.62	0.44	0.62	9.13
½	3.54	2.37	4 × Ø0.62	0.44	0.62	10.98
1	4.33	3.13	4 × Ø0.62	0.56	1.05	12.95
1½	4.92	3.87	4 × Ø0.62	0.69	1.61	17.52
2	5.91	4.75	4 × Ø0.75	0.75	2.07	21.89
Surface roughness (flange): Ra 126 to 248 µin						

1) DN ⅜" with DN ½" flanges as standard

Flange similar to ASME B16.5, Class 300 1.4404 (F316/F316L) *Order code for "Process connection", option* **ABS**						
DN [in]	**A [in]**	**B [in]**	**C [in]**	**D [in]**	**E [in]**	**L [in]**
⅜ 1)	3.74	2.63	4 × Ø0.62	0.56	0.62	9.13
½	3.74	2.63	4 × Ø0.62	0.56	0.62	10.98
1	4.92	3.50	4 × Ø0.75	0.69	1.05	12.95
1½	6.10	4.50	4 × Ø0.88	0.81	1.61	17.52
2	6.50	5.00	8 × Ø0.75	0.88	2.07	21.89
Surface roughness (flange): Ra 126 to 248 µin						

1) DN ⅜" with DN ½" flanges as standard

Flange similar to ASME B16.5, Class 600 1.4404 (F316/F316L) *Order code for "Process connection", option* **ACS**						
DN [in]	**A [in]**	**B [in]**	**C [in]**	**D [in]**	**E [in]**	**L [in]**
⅜ [1]	3.74	2.63	4 × Ø0.62	0.81	0.55	10.28
½	3.74	2.63	4 × Ø0.62	0.81	0.55	11.61
1	4.92	3.50	4 × Ø0.75	0.94	0.96	14.96
1½	6.10	4.50	4 × Ø0.88	1.13	1.50	19.53
2	6.50	5.00	8 × Ø0.75	1.25	1.94	22.95
Surface roughness (flange): Ra 126 to 248 µin						

1) DN ⅜" with DN ½" flanges as standard

Clamp connections

Tri-Clamp

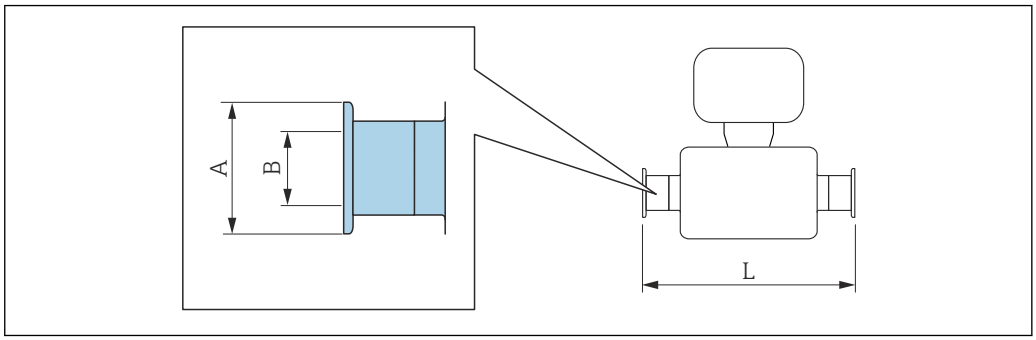

Length tolerance for dimension L in inches:
+0.06/−0.08

Tri-Clamp (½"), DIN 11866 series C **1.4404 (316/316L)** *Order code for "Process connection", option* **FDW**				
DN [in]	**Clamp [in]**	**A [in]**	**B [in]**	**L [in]**
⅜	½	0.98	0.37	9.02
½	½	0.98	0.37	10.75
3-A version available: order code for "Additional approval", option LP in conjunction with Ra ≤ 30 µin: order code for "Measuring tube material", option SB, SJ Ra ≤ 15 µin: order code for "Measuring tube material", option SC, SK				

Tri-Clamp (≥ 1"), DIN 11866 series C **1.4404 (316/316L)** *Order code for "Process connection", option* **FTS**				
DN [in]	**Clamp [in]**	**A [in]**	**B [in]**	**L [in]**
⅜	1	1.98	0.87	9.02
½	1	1.98	0.87	10.75
1	1	1.98	0.87	12.76
1½	1½	1.98	1.37	17.95
2	2	2.52	1.87	22.13
3-A version available: order code for "Additional approval", option LP in conjunction with Ra ≤ 30 µin: order code for "Measuring tube material", option SB, SJ Ra ≤ 15 µin: order code for "Measuring tube material", option SC, SK				

Threaded couplings

Threaded adapter SMS 1145

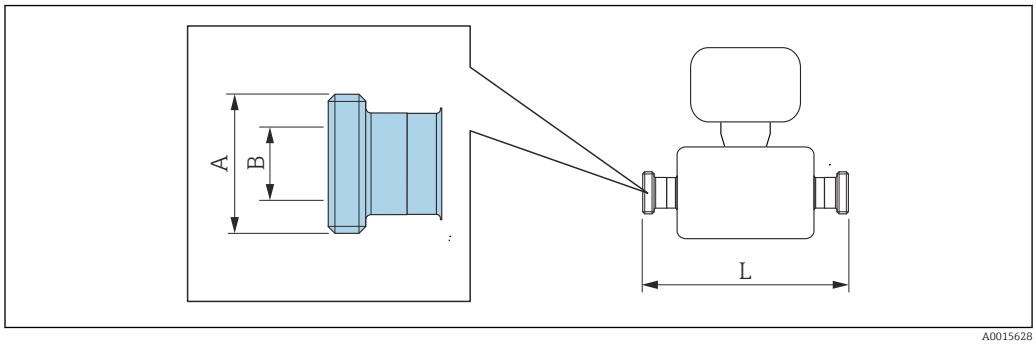

A0015628

Length tolerance for dimension L in inches:
+0.06/−0.08

Threaded adapter SMS 1145 **1.4404 (316/316L)** *Order code for "Process connection", option* **SCS**			
DN **[in]**	**A** **[in]**	**B** **[in]**	**L** **[in]**
⅜	Rd 40 × ⅙	0.89	9.02
½	Rd 40 × ⅙	0.89	10.75
1	Rd 40 × ⅙	0.89	12.76
1½	Rd 60 × ⅙	1.40	17.95
2	Rd 70 × ⅙	1.91	22.13
3-A version available: order code for "Additional approval", option LP in conjunction with Ra ≤ 30 µin: order code for "Measuring tube material", option SB, SJ Ra ≤ 15 µin: order code for "Measuring tube material", option SC, SK			

VCO

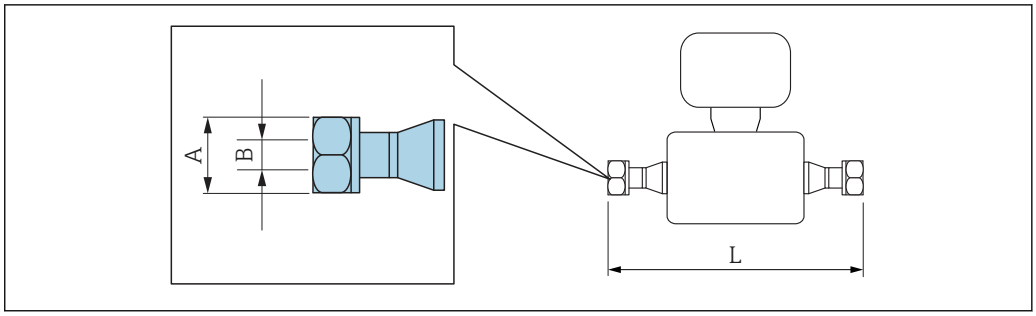

A0015624

Length tolerance for dimension L in inches:
+0.06/−0.08

8-VCO-4 (½") 1.4404 (316/316L) *Order code for "Process connection", option* **CVS**			
DN [in]	**A [in]**	**B [in]**	**L [in]**
⅜	AF 1	0.40	9.92

12-VCO-4 (¾") 1.4404 (316/316L) *Order code for "Process connection", option* **CWS**			
DN [in]	**A [in]**	**B [in]**	**L [in]**
½	AF 1½	0.62	12.01

Weight

All values (weight exclusive of packaging material) refer to devices with EN/DIN PN 40 flanges.

Weight in SI units

DN [mm]	Weight [kg]
8	5
15	5.5
25	7
40	11
50	16

Weight in US units

DN [in]	Weight [lbs]
3/8	11
½	12
1	15
1½	24
2	35

Materials

Transmitter housing

- Order code for "Housing", option C "Compact, aluminum coated": Aluminum, AlSi10Mg, coated
- Window material: glass

Cable entries/cable glands

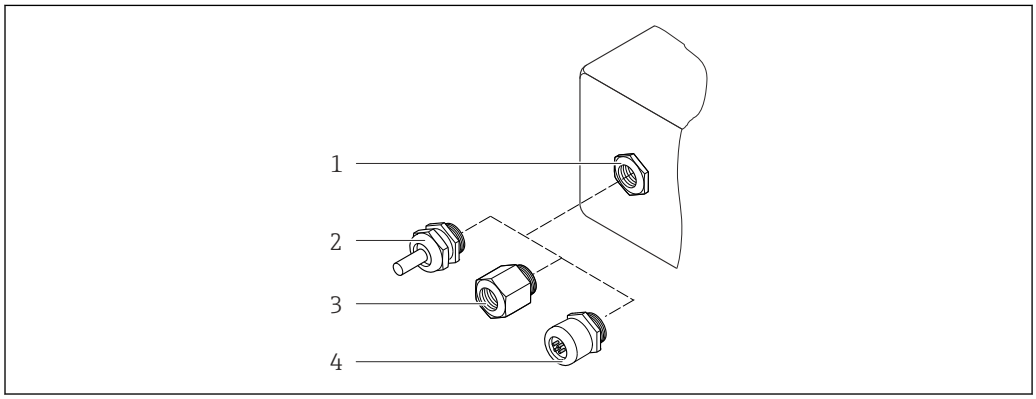

19 *Possible cable entries/cable glands*

1 *Internal thread M20 × 1.5*
2 *Cable gland M20 × 1.5*
3 *Adapter for cable entry with internal thread G ½" or NPT ½"*
4 *Device plug*

Order code for "Housing", option C "GT20 dual compartment, aluminum coated"

Cable entry/cable gland	Type of protection	Material
Cable gland M20 × 1.5	▪ Non-hazardous area ▪ Ex ia ▪ Ex ic	Plastic
	Adapter for cable entry with female thread G ½"	Nickel-plated brass
Adapter for cable entry with female thread NPT ½"	Non-hazardous area and hazardous area (except for CSA Ex d/XP)	Nickel-plated brass
Thread NPT ½" via adapter	Non-hazardous area and hazardous area	

Device plug

Electrical connection	Material
Plug M12x1	▪ Socket: stainless steel, 1.4401/316 ▪ Contact housing: plastic, PUR, black ▪ Contacts: metal, CuZn, gold-plated ▪ Threaded connection seal: NBR

Sensor housing

- Acid and alkali-resistant outer surface
- Stainless steel 1.4301 (304)

Measuring tubes

Stainless steel, 1.4539 (904L); manifold: stainless steel, 1.4404 (316L)

Process connections

- Flanges similar to EN 1092-1 (DIN2501) / similar to ASME B 16.5 / as per JIS B2220:
  Stainless steel, 1.4404 (F316/F316L)
- All other process connections:
  Stainless steel, 1.4404 (316/316L)

Available process connections → 53

Seals

Welded process connections without internal seals

Accessories

Protective cover

Stainless steel, 1.4404 (316L)

Remote display FHX50

Housing material:
- Plastic PBT
- Stainless steel CF-3M (316L, 1.4404)

Process connections

- Fixed flange connections:
  - EN 1092-1 (DIN 2501) flange
  - EN 1092-1 (DIN 2512N) flange
  - NAMUR lengths in accordance with NE 132
  - ASME B16.5 flange
  - JIS B2220 flange
  - DIN 11864-2 Form A flange, DIN 11866 series A, flange with notch
- Clamp connections:
  Tri-Clamp (OD tubes), DIN 11866 series C
- Thread:
  - DIN 11851 thread, DIN 11866 series A
  - SMS 1145 thread
  - ISO 2853 thread, ISO 2037
  - DIN 11864-1 Form A thread, DIN 11866 series A
- VCO connections:
  - 8-VCO-4
  - 12-VCO-4

Process connection materials

Surface roughness

All data relate to parts in contact with medium.

The following surface roughness categories can be ordered:

Category	Method	Option(s)/Order code "Measuring tube mat., wetted surface"
Not polished	–	SA
Ra ≤ 0.76 µm (30 µin) [1]	Mechanically polished [2]	SB
Ra ≤ 0.76 µm (30 µin) [1]	Mechanically polished [2], welds in as-welded condition	SJ
Ra ≤ 0.38 µm (15 µin) [1]	Mechanically polished [2]	SC
Ra ≤ 0.38 µm (15 µin) [1]	Mechanically polished [2], welds in as-welded condition	SK

1) Ra according to ISO 21920
2) Inaccessible weld seams between pipe and manifold are excluded

Operability

Operating concept

Operator-oriented menu structure for user-specific tasks
- Commissioning
- Operation
- Diagnostics
- Expert level

Quick and safe commissioning
- Guided menus ("Make-it-run" wizards) for applications
- Menu guidance with brief explanations of the individual parameter functions

Reliable operation
- Operation in the following languages:
  - Via local display:
    English, German, French, Spanish, Italian, Dutch, Portuguese, Polish, Russian, Swedish, Turkish, Chinese, Japanese, Bahasa (Indonesian), Vietnamese, Czech
  - Via "FieldCare" operating tool:
    English, German, French, Spanish, Italian, Chinese, Japanese
- Uniform operating philosophy applied to device and operating tools
- If replacing the electronic module, transfer the device configuration via the integrated memory (integrated HistoROM) which contains the process and measuring device data and the event logbook. No need to reconfigure.

Efficient diagnostics increase measurement availability
- Troubleshooting measures can be called up via the device and in the operating tools
- Diverse simulation options, logbook for events that occur and optional line recorder functions

Languages

Can be operated in the following languages:
- Via local display:
  English, German, French, Spanish, Italian, Dutch, Portuguese, Polish, Russian, Swedish, Turkish, Chinese, Japanese, Bahasa (Indonesian), Vietnamese, Czech
- Via "FieldCare" operating tool:
  English, German, French, Spanish, Italian, Chinese, Japanese

Onsite operation

Via display module

Two display modules are available:

Order code for "Display; Operation", option C "SD02"	Order code for "Display; Operation", option E "SD03"
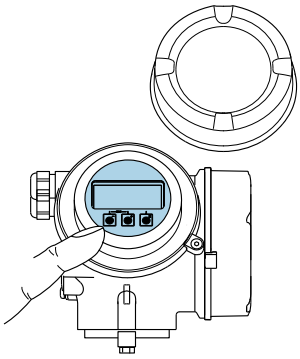 A0032219	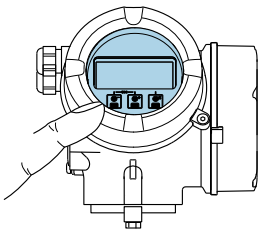 A0032221
1 Operation with pushbuttons	*1 Operation with touch control*

Display elements
- 4-line, illuminated, graphic display
- White background lighting; switches to red in event of device errors
- Format for displaying measured variables and status variables can be individually configured

Operating elements

- Operation with 3 push buttons with open housing: ⊞, ⊟, Ⓔ
  or
- External operation via touch control (3 optical keys) without opening the housing: ⊞, ⊟, Ⓔ
- Operating elements also accessible in the various zones of the hazardous area

Additional functionality

- Data backup function
  The device configuration can be saved in the display module.
- Data comparison function
  The device configuration saved in the display module can be compared to the current device configuration.
- Data transfer function
  The transmitter configuration can be transmitted to another device using the display module.

Via remote display FHX50

The remote display FHX50 can be ordered as an optional extra→ 63.

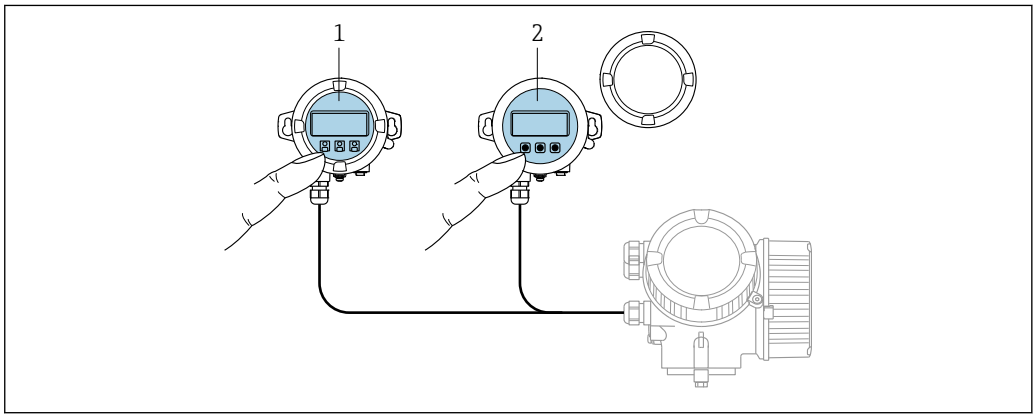

20 FHX50 operating options

1 SD02 display and operating module, push buttons: cover must be opened for operation
2 SD03 display and operating module, optical buttons: operation possible through cover glass

Display and operating elements

The display and operating elements correspond to those of the display module .

Remote operation

Via HART protocol

This communication interface is available in device versions with a HART output.

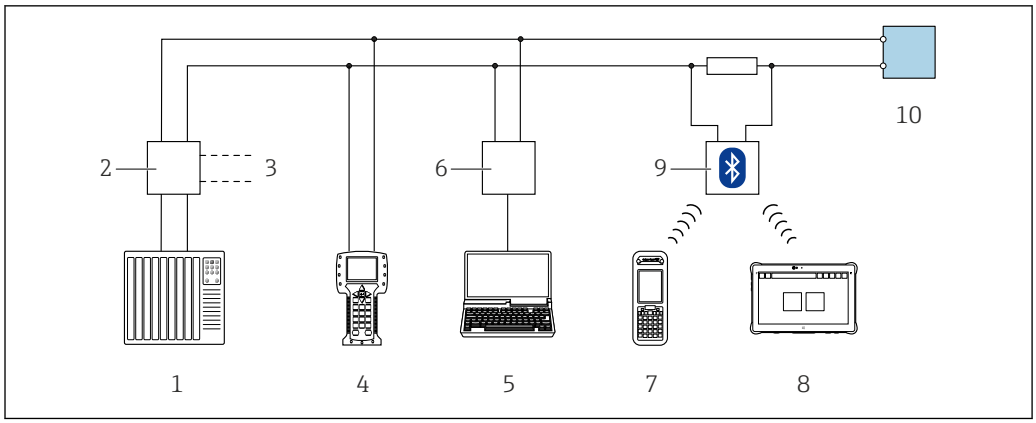

21 *Options for remote operation via HART protocol (passive)*

1 *Automation system (e.g. PLC)*
2 *Transmitter power supply unit, e.g. RN221N (with communication resistor)*
3 *Connection for Commubox FXA195 and Field Communicator 475*
4 *Field Communicator 475*
5 *Computer with Web browser (e.g. Internet Explorer) for accessing computers with an operating tool (e.g. FieldCare, DeviceCare, AMS Device Manager, AMS TREX Device Communicator, SIMATIC PDM) with COM DTM "CDI Communication TCP/IP"*
6 *Commubox FXA195 (USB)*
7 *Field Xpert SFX350 or SFX370*
8 *Field Xpert SMT50 (or 70 or 77)*
9 *VIATOR Bluetooth modem with connecting cable*
10 *Transmitter*

Via PROFIBUS PA network

This communication interface is available in device versions with PROFIBUS PA.

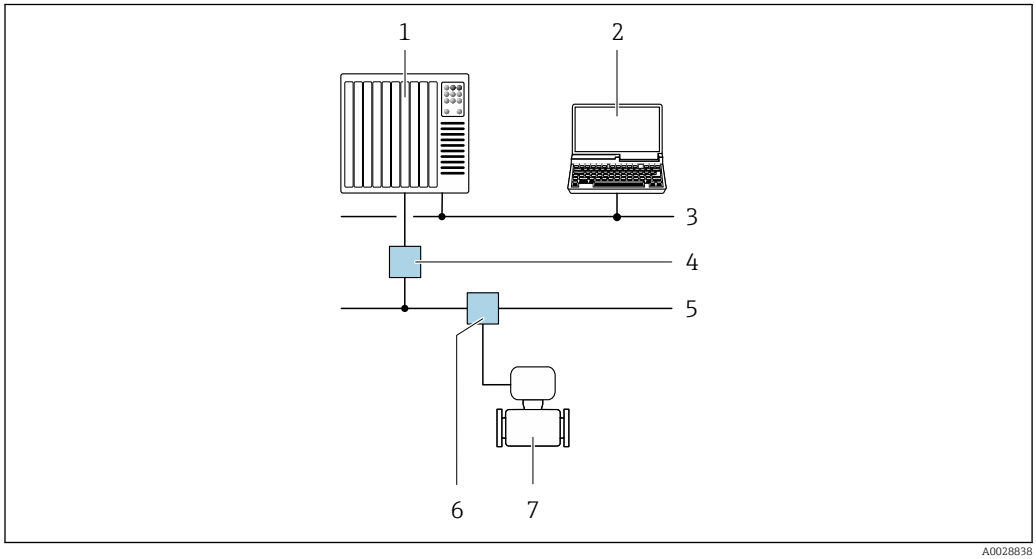

22 *Options for remote operation via PROFIBUS PA network*

1 *Automation system*
2 *Computer with PROFIBUS network card*
3 *PROFIBUS DP network*
4 *Segment coupler PROFIBUS DP/PA*
5 *PROFIBUS PA network*
6 *T-box*
7 *Measuring instrument*

Via FOUNDATION Fieldbus network

This communication interface is available in device versions with FOUNDATION Fieldbus.

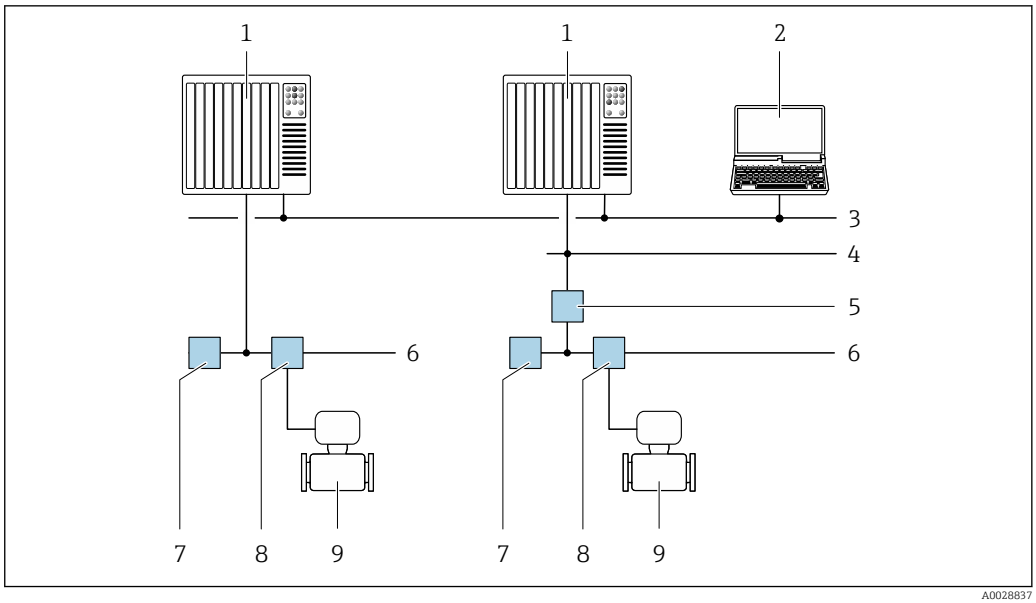

23 Options for remote operation via FOUNDATION Fieldbus network

1 Automation system
2 Computer with FOUNDATION Fieldbus network card
3 Industry network
4 High Speed Ethernet FF-HSE network
5 Segment coupler FF-HSE/FF-H1
6 FOUNDATION Fieldbus FF-H1 network
7 Power supply FF-H1 network
8 T-box
9 Measuring instrument

Service interface

Via service interface (CDI)

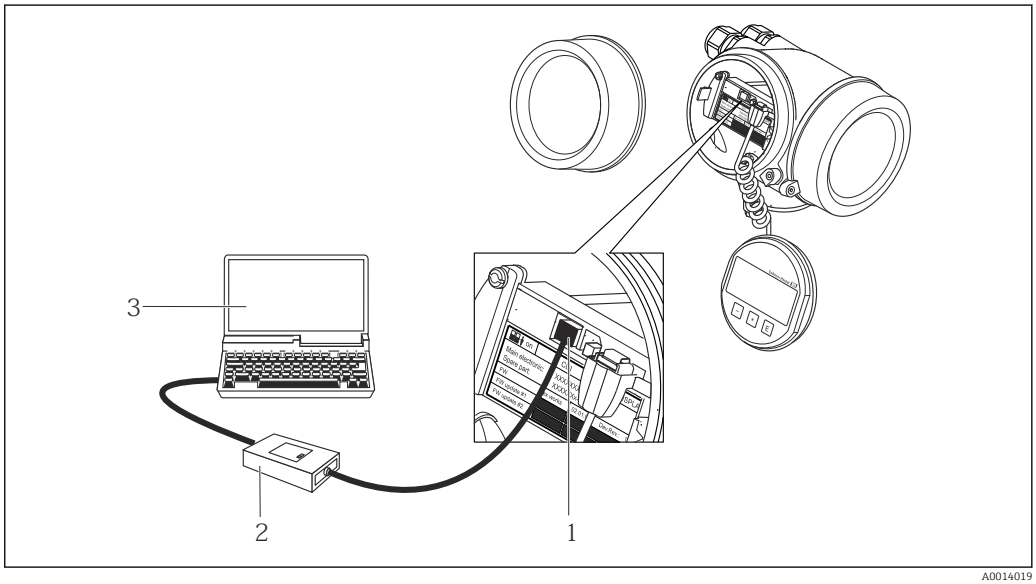

1 Service interface (CDI = Endress+Hauser Common Data Interface) of the measuring instrument
2 Commubox FXA291
3 Computer with FieldCare operating tool with COM DTM CDI Communication FXA291

Supported operating tools

Different operating tools can be used for local or remote access to the measuring device. Depending on the operating tool used, access is possible with different operating units and via a variety of interfaces.

Supported operating tools	Operating unit	Interface	Additional information
DeviceCare SFE100	Notebook, PC or tablet with Microsoft Windows system	CDI service interface	→ 📄 65
FieldCare SFE500	Notebook, PC or tablet with Microsoft Windows system	CDI service interface	→ 📄 65
Field Xpert	SMT70/77/50	CDI service interface	Operating Instructions BA01202S Device description files: Use update function of handheld terminal

Other operating tools based on FDT technology with a device driver such as DTM/iDTM or DD/EDD can be used for device operation. These operating tools are available from the individual manufacturers. Integration into the following operating tools, among others, is supported:

- FactoryTalk AssetCentre (FTAC) from Rockwell Automation → www.rockwellautomation.com
- Process Device Manager (PDM) from Siemens → www.siemens.com
- Asset Management Solutions (AMS) from Emerson → www.emersonprocess.com
- FieldCommunicator 375/475 from Emerson → www.emersonprocess.com
- Emersons TREX → www.emerson.com
- Field Device Manager (FDM) from Honeywell → www.process.honeywell.com
- FieldMate from Yokogawa → www.yokogawa.com
- PACTWare → www.pactware.com

The related device description files are available: www.endress.com → Download Area

Certificates and approvals

Current certificates and approvals for the product are available at www.endress.com on the relevant product page:

1. Select the product using the filters and search field.
2. Open the product page.
3. Select **Downloads**.

CE mark

The device meets the legal requirements of the applicable EU Directives. These are listed in the corresponding EU Declaration of Conformity along with the standards applied.

Endress+Hauser confirms successful testing of the device by affixing to it the CE mark.

UKCA marking

The device meets the legal requirements of the applicable UK regulations (Statutory Instruments). These are listed in the UKCA Declaration of Conformity along with the designated standards. By selecting the order option for UKCA marking, Endress+Hauser confirms a successful evaluation and testing of the device by affixing the UKCA mark.

Contact address Endress+Hauser UK:
Endress+Hauser Ltd.
Floats Road
Manchester M23 9NF
United Kingdom
www.uk.endress.com

RCM marking

The measuring system meets the EMC requirements of the "Australian Communications and Media Authority (ACMA)".

Ex approval

The measuring device is certified for use in hazardous areas and the relevant safety instructions are provided in the separate "Safety Instructions" (XA) document. Reference is made to this document on the nameplate.

The separate Ex documentation (XA) containing all the relevant explosion protection data is available from your Endress+Hauser sales center.

Hygienic compatibility

- 3-A approval
  - Only measuring instruments with the order code for "Additional approval", option LP "3A" have 3-A approval.
  - The 3-A approval refers to the measuring instrument.
  - When installing the measuring instrument, ensure that no liquid can accumulate on the outside of the measuring instrument.
    A remote display module must be installed in accordance with the 3-A Standard.
  - Accessories (e.g. heating jacket, weather protection cover, wall holder unit) must be installed in accordance with the 3-A Standard.
    Each accessory can be cleaned. Disassembly may be necessary under certain circumstances.
- EHEDG-tested (Type EL Class I)
  Only devices with the order code for "Additional approval", option LT "EHEDG" have been tested and meet the requirements of the EHEDG.
  To meet the requirements for EHEDG certification, the device must be used with process connections in accordance with the EHEDG position paper entitled "Easy cleanable Pipe couplings and Process connections" (www.ehedg.org).
  To meet the requirements for EHEDG certification, the orientation of the device must ensure drainability.
  Test criteria for cleanability according to EHEDG is a flow velocity of 1.5 m/s in the process line. This speed must be ensured for EHEDG-compliant cleaning.
- FDA CFR 21
- Food Contact Materials Regulation (EC) 1935/2004
- Food Contact Materials Regulation GB 4806
- The requirements of the Food Contact Material regulations must be observed when selecting the material versions.

Observe special installation instructions

Pharmaceutical compatibility

- FDA 21 CFR 177
- USP <87>
- USP <88> Class VI 121 °C
- TSE/BSE Certificate of Suitability
- cGMP
  Devices with the order code for "Test, certificate", option JG "Conformity with cGMP-derived requirements, declaration" comply with the requirements of cGMP with regard to the surfaces of parts in contact with the medium, design, FDA 21 CFR material conformity, USP Class VI tests and TSE/BSE conformity.
  A serial number-specific declaration is generated.

Functional safety

The measuring instrument can be used for flow monitoring systems (min., max., range) up to SIL 2 (single-channel architecture; order code for "Additional approval", option LA) and SIL 3 (multi-channel architecture with homogeneous redundancy) and is independently evaluated and certified in accordance with IEC 61508.

The following types of monitoring in safety equipment are possible:
- Mass flow
- Volume flow
- Density

Functional safety manual with information for the SIL device → 67

HART certification

HART interface

The measuring device is certified and registered by the FieldComm Group. The measuring system meets all the requirements of the following specifications:
- Certified according to HART 7
- The device can also be operated with certified devices of other manufacturers (interoperability)

FOUNDATION Fieldbus certification

FOUNDATION Fieldbus interface

The measuring device is certified and registered by the FieldComm Group. The measuring system meets all the requirements of the following specifications:
- Certified in accordance with FOUNDATION Fieldbus H1
- Interoperability Test Kit (ITK), revision version 6.1.1 (certificate available on request)
- Physical Layer Conformance Test
- The device can also be operated with certified devices of other manufacturers (interoperability)

Certification PROFIBUS

PROFIBUS interface

The measuring device is certified and registered by the PNO (PROFIBUS Nutzerorganisation e.V./ PROFIBUS User Organization). The measuring system meets all the requirements of the following specifications:
- Certified according to PA Profile 3.02
- The device can also be operated with certified devices of other manufacturers (interoperability)

Pressure Equipment Directive

The measuring instruments can be ordered with or without PED or PESR. If a device with PED or PESR is required, this must be ordered explicitly. For devices with nominal diameters less than or equal to DN 25 (NPS 1"), this is neither possible nor necessary. A UK order option must be selected for PESR under the order code for "Approvals".

- With the marking
  a) PED/G1/x (x = category) or
  b) PESR/G1/x (x = category)
  on the sensor nameplate, Endress+Hauser confirms compliance with the "Essential Safety Requirements"
  a) specified in Annex I of the Pressure Equipment Directive 2014/68/EU or
  b) Schedule 2 of Statutory Instruments 2016 No. 1105.
- Devices bearing this marking (PED or PESR) are suitable for the following types of medium:
  - Media in Group 1 and 2 with a vapor pressure greater than, or smaller and equal to 0.5 bar (7.3 psi)
  - Unstable gases
- Devices not bearing this marking (without PED or PESR) are designed and manufactured according to sound engineering practice. They meet the requirements of
  a) Art. 4, Section 3 of the Pressure Equipment Directive 2014/68/EU or
  b) Part 1, Section 8 of Statutory Instruments 2016 No. 1105.
  The scope of application is indicated
  a) in diagrams 6 to 9 in Annex II of the Pressure Equipment Directive 2014/68/EU or
  b) in Schedule 3, Section 2 of Statutory Instruments 2016 No. 1105.

Additional certification

CRN approval

Some device versions have CRN approval. A CRN-approved process connection with a CSA approval must be ordered for a CRN-approved device.

Tests and certificates

- EN10204-3.1 material certificate, wetted parts and sensor housing (order code for "Test, certificate", option JA)
- Pressure test, internal process, test report (order code for "Test, certificate", option JB)
- Surface roughness test ISO4287/Ra, (wetted parts), test report (option JE)
- Compliance with requirements derived from cGMP, Declaration (option JG)

External standards and guidelines

- EN 60529
  Degrees of protection provided by enclosure (IP code)
- IEC/EN 60068-2-6
  Environmental influences: Test procedure - Test Fc: vibrate (sinusoidal).
- IEC/EN 60068-2-31
  Environmental influences: Test procedure - Test Ec: shocks due to rough handling, primarily for devices.
- EN 61010-1
  Safety requirements for electrical equipment for measurement, control and laboratory use - general requirements
- GB 30439.5
  Safety requirements for industrial automation products - Part 5: Flowmeter safety requirements

- EN 61326-1/-2-3
  EMC requirements for electrical equipment for measurement, control and laboratory use
- IEC 61508
  Functional safety of electrical/electronic/programmable electronic safety-related systems
- NAMUR NE 21
  Electromagnetic compatibility (EMC) of industrial process and laboratory control equipment
- NAMUR NE 32
  Data retention in the event of a power failure in field and control instruments with microprocessors
- NAMUR NE 43
  Standardization of the signal level for the breakdown information of digital transmitters with analog output signal.
- NAMUR NE 53
  Software of field devices and signal-processing devices with digital electronics
- NAMUR NE 80
  The application of the pressure equipment directive to process control devices
- NAMUR NE 105
  Specifications for integrating fieldbus devices in engineering tools for field devices
- NAMUR NE 107
  Self-monitoring and diagnostics of field devices
- NAMUR NE 131
  Requirements for field devices for standard applications
- NAMUR NE 132
  Coriolis mass meter
- ETSI EN 300 328
  Guidelines for 2.4 GHz radio components.
- EN 301489
  Electromagnetic compatibility and radio spectrum matters (ERM).

Ordering information

Detailed ordering information is available from your nearest sales organization www.addresses.endress.com or in the Product Configurator at www.endress.com:

1. Select the product using the filters and search field.
2. Open the product page.
3. Select **Configuration**.

Product Configurator - the tool for individual product configuration
- Up-to-the-minute configuration data
- Depending on the device: direct input of information specific to the measuring point, such as the measuring range or operating language
- Automatic verification of exclusion criteria
- Automatic creation of the order code and its breakdown in PDF or Excel output format
- Ability to order directly in the Endress+Hauser Online Shop

Product generation index

Release date	Product root	Documentation
01.12.2016	8E2C	TI01300D

More information is available from your Sales Center or at:
www.service.endress.com → Downloads

Application packages

Many different application packages are available to enhance the functionality of the device. Such packages might be needed to address safety aspects or specific application requirements.

The application packages can be ordered with the device or subsequently from Endress+Hauser. Detailed information on the order code in question is available from your local Endress+Hauser sales center or on the product page of the Endress+Hauser website: www.endress.com.

Detailed information on the application packages:
Special Documentation → 67

Diagnostic functionality

Order code for "Application package", option EA "Extended HistoROM"

Comprises extended functions concerning the event log and the activation of the measured value memory.

Event log:
Memory volume is extended from 20 message entries (standard version) to up to 100 entries.

Data logging (line recorder):
- Memory capacity for up to 1000 measured values is activated.
- 250 measured values can be output via each of the 4 memory channels. The recording interval can be defined and configured by the user.
- Measured value logs can be accessed via the local display or operating tool e.g. FieldCare, DeviceCare or Web server.

For detailed information, see the Operating Instructions for the device.

Heartbeat Technology

Order code for "Application package", option EB "Heartbeat Verification + Monitoring"

Heartbeat Verification
Meets the requirement for traceable verification in accordance with DIN ISO 9001:2015 Clause 7.6 a) "Control of monitoring and measuring equipment".
- Functional testing in the installed state without interrupting the process.
- Traceable verification results on request, including a report.
- Simple testing process via local operation or other operating interfaces.
- Clear measuring point assessment (pass/fail) with high total test coverage within the framework of manufacturer specifications.
- Extension of calibration intervals according to operator's risk evaluation.

Detailed information on Heartbeat Technology:
Special Documentation → 67

Petroleum & locking function

Order code for "Application package", option EM "Petroleum & locking function"

The most important parameters for the Oil & Gas Industry can be calculated and displayed with this application package. It is also possible to lock the settings.

- Corrected volume flow and calculated reference density in accordance with the "API Manual of Petroleum Measurement Standards, Chapter 11.1"
- Water content, based on density measurement
- Weighted mean of the density and temperature

For detailed information, see the Special Documentation for the device.

Accessories

Various accessories, which can be ordered with the device or subsequently from Endress+Hauser, are available for the device. Detailed information on the order code in question is available from your local Endress+Hauser sales center or on the product page of the Endress+Hauser website: www.endress.com.

Device-specific accessories

For the transmitter

Accessory	Description
Promass 200 transmitter	Transmitter for replacement or storage. Use the order code to define the following specifications: ▪ Approvals ▪ Output ▪ Display/operation ▪ Housing ▪ Software Installation Instructions EA00104D (Order number: 8X2CXX)

Remote display FHX50	FHX50 housing for accommodating a display module .
	▪ FHX50 housing suitable for:
	  ▪ SD02 display module (push buttons)
	  ▪ SD03 display module (touch control)
	▪ Length of connecting cable: up to max. 60 m (196 ft) (cable lengths available for order: 5 m (16 ft), 10 m (32 ft), 20 m (65 ft), 30 m (98 ft))
	The measuring instrument can be ordered with the FHX50 housing and a display module. The following options must be selected in the separate order codes:
	▪ Order code for measuring instrument, feature 030: Option L or M "Prepared for FHX50 display"
	▪ Order code for FHX50 housing, feature 050 (measuring instrument version): Option A "Prepared for FHX50 display"
	▪ Order code for FHX50 housing, depends on the desired display module in feature 020 (display, operation):
	  ▪ Option C: for an SD02 display module (push buttons)
	  ▪ Option E: for an SD03 display module (touch control)
	The FHX50 housing can also be ordered as a retrofit kit. The measuring instrument display module is used in the FHX50 housing. The following options must be selected in the order code for the FHX50 housing:
	▪ Feature 050 (measuring instrument version): option B "Not prepared for FHX50 display"
	▪ Feature 020 (display, operation): option A "None, existing displayed used"
	Special Documentation SD01007F
	(Order number: FHX50)

Overvoltage protection for 2-wire devices	Ideally, the overvoltage protection module should be ordered directly with the device. See product structure, feature 610 "Accessory mounted", option NA "Overvoltage protection". Separate order necessary only if retrofitting. ▪ OVP10: For 1-channel devices (feature 020, option A): ▪ OVP20: For 2-channel devices (feature 020, options B, C, E or G) Special Documentation SD01090F (Order number OVP10: 71128617) (Order number OVP20: 71128619)
Protective cover	The weather protection cover is used to protect against direct sunlight, precipitation and ice. It can be ordered together with the device via the product structure: Order code for "Accessories enclosed" option PB "Protective cover" Special Documentation SD00333F (Order number: 71162242)

For the sensor

Accessories	Description
Heating jacket	Is used to stabilize the temperature of the fluids in the sensor. Water, water vapor and other non-corrosive liquids are permitted for use as fluids. If using oil as a heating medium, please consult with Endress+Hauser. Heating jackets cannot be used with sensors fitted with a rupture disk. ▪ If ordered together with the measuring device: Order code for "Accessory enclosed" ▪ Option RB "Heating jacket, G 1/2" female thread" ▪ Option RC "Heating jacket, G 3/4" female thread" ▪ Option RD "Heating jacket, NPT 1/2" female thread" ▪ Option RE "Heating jacket, NPT 3/4" female thread" ▪ If ordered subsequently: Use the order code with the product root DK8003. Special Documentation SD02151D

Communication-specific accessories

Accessories	Description
Commubox FXA195 HART	For intrinsically safe HART communication with FieldCare via the USB interface. Technical Information TI00404F
Commubox FXA291	Connects Endress+Hauser field devices with a CDI interface (= Endress+Hauser Common Data Interface) and the USB port of a computer or laptop. Technical Information TI00405C
HART loop converter HMX50	Is used to evaluate and convert dynamic HART process variables to analog current signals or limit values. ▪ Technical Information TI00429F ▪ Operating Instructions BA00371F
Wireless HART adapter SWA70	Is used for the wireless connection of field devices. The WirelessHART adapter can be easily integrated into field devices and existing infrastructures, offers data protection and transmission safety and can be operated in parallel with other wireless networks with minimum cabling complexity. Operating Instructions BA00061S
Fieldgate FXA42	Transmission of the measured values of connected 4 to 20 mA analog measuring instruments, as well as digital measuring instruments ▪ Technical Information TI01297S ▪ Operating Instructions BA01778S ▪ Product page: www.endress.com/fxa42
Field Xpert SMT50	The Field Xpert SMT50 tablet PC for device configuration enables mobile plant asset management in non-hazardous areas. It is suitable for commissioning and maintenance staff to manage field instruments with a digital communication interface and to record progress. This tablet PC is designed as an all-in-one solution with a preinstalled driver library and is an easy-to-use, touch-sensitive tool which can be used to manage field instruments throughout their entire life cycle. ▪ Technical Information TI01555S ▪ Operating Instructions BA02053S ▪ Product page: www.endress.com/smt50

Field Xpert SMT70	The Field Xpert SMT70 tablet PC for device configuration enables mobile plant asset management in hazardous and non-hazardous areas. It is suitable for commissioning and maintenance staff to manage field instruments with a digital communication interface and to record progress. This tablet PC is designed as an all-in-one solution with a preinstalled driver library and is an easy-to-use, touch-sensitive tool which can be used to manage field instruments throughout their entire life cycle. ▪ Technical Information TI01342S ▪ Operating Instructions BA01709S ▪ Product page: www.endress.com/smt70
Field Xpert SMT77	The Field Xpert SMT77 tablet PC for device configuration enables mobile plant asset management in areas categorized as Ex Zone 1. ▪ Technical Information TI01418S ▪ Operating Instructions BA01923S ▪ Product page: www.endress.com/smt77

Service-specific accessories

Accessory	Description
Applicator	Software for selecting and sizing Endress+Hauser measuring instruments: ▪ Choice of measuring instruments for industrial requirements ▪ Calculation of all the necessary data for identifying the optimum flowmeter: e.g. nominal diameter, pressure loss, flow velocity and measurement accuracy. ▪ Graphic display of the calculation results ▪ Determining the partial order code. Administration, documentation and access to all project-related data and parameters over the entire life cycle of a project. Applicator is available: Via the Internet: https://portal.endress.com/webapp/applicator
Netilion	IIoT ecosystem: Unlock knowledge With the Netilion IIoT ecosystem, Endress+Hauser allows you to optimize your plant performance, digitize workflows, share knowledge, and enhance collaboration. Based on decades of experience in process automation, Endress+Hauser offers the process industry an IIoT ecosystem that enables you to gain useful insights from data. These insights can be used to optimize processes, leading to increased plant availability, efficiency, and reliability - ultimately resulting in a more profitable plant. www.netilion.endress.com
FieldCare	FDT-based plant asset management tool from Endress+Hauser. It can configure all intelligent field units in your system and helps you manage them. By using the status information, it is also a simple but effective way of checking their status and condition. Operating Instructions BA00027S and BA00059S
DeviceCare	Tool to connect and configure Endress+Hauser field devices. ▪ Technical Information: TI01134S ▪ Innovation brochure: IN01047S

System components

Accessories	Description
Memograph M graphic data manager	The Memograph M graphic data manager provides information on all the relevant measured variables. Measured values are recorded correctly, limit values are monitored and measuring points analyzed. The data are stored in the 256 MB internal memory and also on a SD card or USB stick. ▪ Technical Information TI00133R ▪ Operating Instructions BA00247R
RN221N	Active barrier with power supply for safe separation of 4-20 mA standard signal circuits. Offers bidirectional HART transmission. ▪ Technical Information TI00073R ▪ Operating Instructions BA00202R

Accessories	Description
RNS221	Supply unit for powering two 2-wire measuring devices solely in the non-hazardous area. Bidirectional communication is possible via the HART communication jacks. ▪ Technical Information TI00081R ▪ Brief Operating Instructions KA00110R
Cerabar M	The pressure transmitter for measuring the absolute and gauge pressure of gases, steam and liquids. It can be used to read in the operating pressure value. ▪ Technical Information TI00426P and TI00436P ▪ Operating Instructions BA00200P and BA00382P
Cerabar S	The pressure transmitter for measuring the absolute and gauge pressure of gases, steam and liquids. It can be used to read in the operating pressure value. ▪ Technical Information TI00383P ▪ Operating Instructions BA00271P

Documentation

For an overview of the scope of the associated Technical Documentation, refer to the following:
- *Device Viewer* (www.endress.com/deviceviewer): Enter the serial number from the nameplate
- *Endress+Hauser Operations app*: Enter serial number from nameplate or scan matrix code on nameplate.

Standard documentation

Supplementary information on the semi-standard options is available in the relevant Special Documentation in the TSP database.

Brief Operating instructions

Brief Operating Instructions for the sensor

Measuring instrument	Documentation code
Proline Promass E	KA01260D

Brief Operating Instructions for transmitter

	Documentation code		
Measuring device	HART	FOUNDATION Fieldbus	PROFIBUS PA
Proline Promass 200	KA012268	KA01267D	KA01269D

Operating Instructions

	Documentation code		
Measuring instrument	HART	FOUNDATION Fieldbus	PROFIBUS PA
Proline Promass E 200	BA01638D	BA01637D	BA01639D

Description of Device Parameters

	Documentation code		
Measuring device	HART	FOUNDATION Fieldbus	PROFIBUS PA
Proline Promass 200	GP01010D	GP01030D	GP01029D

Device-dependent additional documentation

Safety instructions

Contents	Documentation code
ATEX/IECEx Ex i	XA00144D
ATEX/IECEx Ex d	XA00143D
ATEX/IECEx Ex nA	XA00145D
cCSAus IS	XA00151D
cCSAus XP	XA00152D
INMETRO Ex i	XA01300D
INMETRO Ex d	XA01305D
INMETRO Ex nA	XA01306D
JPN Ex d	XA01763D
KCs Ex d	XA03546D
NEPSI Ex i	XA00156D
NEPSI Ex d	XA00155D
NEPSI Ex nA	XA00157D
NEPSI Ex i	XA1755D
NEPSI Ex d	XA1754D
NEPSI Ex nA	XA1756D

Functional Safety Manual

Contents	Documentation code
Proline Promass 200	SD00147D

Special documentation

Contents	Documentation code
Information on the Pressure Equipment Directive	SD01614D
Display and operating module FHX50	SD01007F

Contents	Documentation		
	HART	FOUNDATION Fieldbus	PROFIBUS PA
Heartbeat Technology	SD01849D	SD01848D	SD01850D

Installation Instructions

Contents	Note
Installation instructions for spare part sets and accessories	The corresponding documentation code is listed with the relevant accessory.→ 63.

Registered trademarks

HART®
Registered trademark of the FieldComm Group, Austin, Texas USA

PROFIBUS®
Registered trademark of the PROFIBUS Nutzerorganisation e.V. (PROFIBUS User Organization), Karlsruhe, Germany

FOUNDATION™ fieldbus
Registration-pending trademark of the FieldComm Group, Austin, Texas, USA

TRI-CLAMP®
Registered trademark of Ladish & Co., Inc., Kenosha, USA



www.addresses.endress.com

Endress+Hauser
People for Process Automation