KA01055F/00/EN/13.13
71229218

Brief Operating Instructions
Micropilot S FMR530

Level-Radar

HART COMMUNICATION PROTOCOL

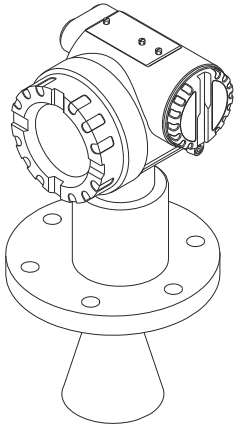

These Instructions are Brief Operating Instructions; they do not replace the Operating Instructions included in the scope of supply.

For detailed information, refer to the Operating Instructions and other documentation on the CD-ROM provided or visit "www.endress.com/deviceviewer".

Endress+Hauser
People for Process Automation

Table of contents

1 Safety instructions 3
1.1 Designated use 3
1.2 Installation, commissioning and operation 3
1.3 Operational safety and process safety 3
1.4 Return 4
1.5 Notes on safety conventions and symbols 4

2 Mounting 7
2.1 Quick installation guide 7
2.2 Incoming acceptance, transport, storage 8
2.3 Installation 8
2.4 Post-installation check 14

3 Wiring 15
3.1 Quick wiring guide 15
3.2 Connecting the measuring unit 18
3.3 Equipotential bonding 19
3.4 Degree of protection 19
3.5 Post-connection check 19

4 Operation 20
4.1 General structure of the operating menu 20
4.2 Display and operating elements 21

5 Commissioning 24
5.1 Function check 24
5.2 Switching on the measuring device 24
5.3 Overview Basic Setup 25
5.4 Basic Setup with device display VU331 27
5.5 Envelope curve with device display VU331 37

1 Safety instructions

1.1 Designated use

The Micropilot S is a compact radar level transmitter for the continuous, contactless measurement of liquids. The device can also be freely mounted outside closed metal vessels because of its operating frequency of about 6 GHz and a maximum radiated pulsed energy of 1 mW (average power output 1 µW). Operation is completely harmless to humans and animals.

1.2 Installation, commissioning and operation

The Micropilot S has been designed to operate safely in accordance with current technical, safety and EU standards. If installed incorrectly or used for applications for which it is not intended, however, it is possible that application-related dangers may arise, e.g. product overflow due to incorrect installation or calibration. For this reason, the device must be installed, connected, operated and maintained according to the instructions in this manual: personnel must be authorised and suitably qualified. The manual must have been read and understood, and the instructions followed. Modifications and repairs to the device are permissible only when they are expressly approved in the manual.

1.3 Operational safety and process safety

Alternative monitoring measures must be taken to ensure operational safety and process safety during configuration, testing and maintenance work on the device.

1.3.1 Hazardous areas

Measuring systems for use in hazardous environments are accompanied by separate "Ex documentation", which is an integral part of this Operating Manual. Strict compliance with the installation instructions and ratings as stated in this supplementary documentation is mandatory.

- Ensure that all personnel are suitably qualified.
- Observe the specifications in the certificate as well as national and local regulations.

1.3.2 FCC approval

This device complies with part 15 of the FCC Rules. Operation is subject to the following two conditions:

1. This device may not cause harmful interference, and
2. this device must accept any interference received, including interference that may cause undesired operation.

⚠ CAUTION

Changes or modifications not expressly approved by the part responsible for compliance could void the user's authority to operate the equipment.

1.4 Return

Follow the instructions on returning the device as outlined in the Operating Instructions (BA00206F/00/EN) on the CD-ROM provided.

1.5 Notes on safety conventions and symbols

In order to highlight safety-relevant or alternative operating procedures in the manual, the following conventions have been used, each indicated by a corresponding symbol in the margin.

1.5.1 Safety symbols

Symbol	Meaning
⚠ DANGER A0011189-EN	**DANGER!** This symbol alerts you to a dangerous situation. Failure to avoid this situation will result in serious or fatal injury.
⚠ WARNING A0011190-EN	**WARNING!** This symbol alerts you to a dangerous situation. Failure to avoid this situation can result in serious or fatal injury.
⚠ CAUTION A0011191-EN	**CAUTION!** This symbol alerts you to a dangerous situation. Failure to avoid this situation can result in minor or medium injury.
NOTICE A0011192-EN	**NOTICE!** This symbol contains information on procedures and other facts which do not result in personal injury.

1.5.2 Electrical symbols

Symbol	Meaning
 A0018339	**Protective ground connection** A terminal which must be connected to ground prior to establishing any other connections.

1.5.3 Tool symbols

Symbol	Meaning
 A0011221	Allen key

1.5.4 Symbols for certain types of information

Symbol	Meaning
 A0011182	**Allowed** Indicates procedures, processes or actions that are allowed.
 A0011184	**Forbidden** Indicates procedures, processes or actions that are forbidden.
 A0011193	**Tip** Indicates additional information.
 A0015484	**Reference to page** Refers to the corresponding page number.
1. , 2. , 3. ,...	Series of steps

1.5.5 Symbols in graphics

Symbol	Meaning
1, 2, 3, 4, ...	Item numbers
1. , 2. , 3. ,...	Series of steps
A, **B**, **C**, **D**, ...	Views

1.5.6 Symbols at the device

Symbol	Meaning
 A0019159	**Safety instructions** Observe the safety instructions contained in the associated Operating Instructions.
 A0019221	Temperature resistance of the connection cables Specifies the minimum value of the temperature resistance of the connection cables.

2 Mounting

2.1 Quick installation guide

2.1.1 Installation in tank (free space)

Mark on process connector facing the nearest tank wall!

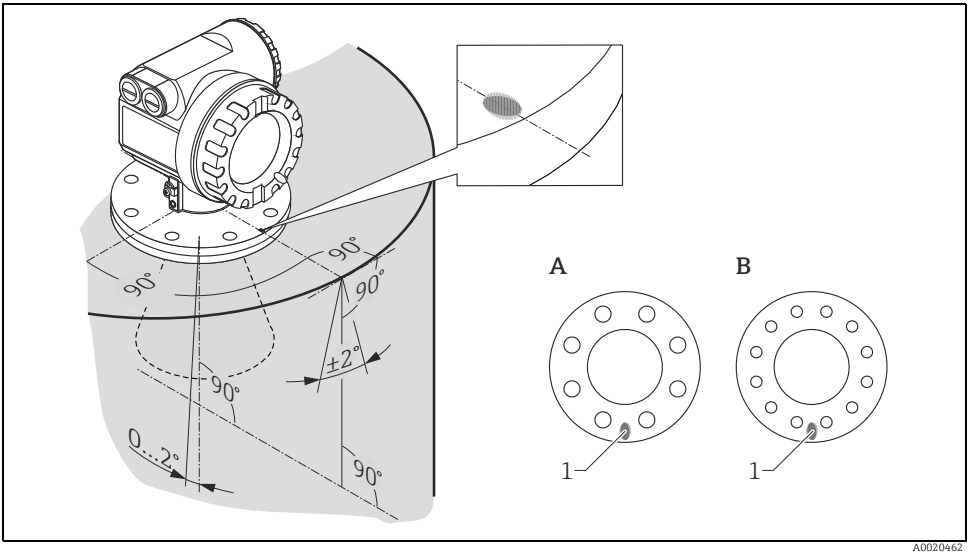

1 Marker at instrument flange
A DN 150, ANSI 6"
B DN 200 to 250, ANSI 8 to 10"

2.2 Incoming acceptance, transport, storage

2.2.1 Incoming acceptance

Check the packing and contents for any signs of damage. Check the shipment, make sure nothing is missing and that the scope of supply matches your order.

2.2.2 Transport

⚠ CAUTION

Follow the safety instructions and transport conditions for devices of more than 18 kg (39.69 lbs).

2.2.3 Storage

Pack the measuring device so that is protected against impacts for storage and transport. The original packing material provides the optimum protection for this.
The permissible storage temperature is -40 to +80 °C (-40 to +176 °F).

2.3 Installation

2.3.1 Mounting kit

For the mounting , you will require the following tool:
- The tool for flange mounting
- 4 mm (0.1") Allen wrench for turning the housing

2.3.2 General installation instructions

Standard installation
- Marker is aligned towards tank wall.
  The marker is located clearly visible on the sensor neck or the flange.
- The device shall not be mounted in a slant towards the tank wall.
- After mounting, the housing can be turned 350° in order to simplify access to the display and the terminal compartment.
- The horn antenna must extend below the nozzle, otherwise use antenna extension FAR10.
- The horn antenna must be aligned vertically.

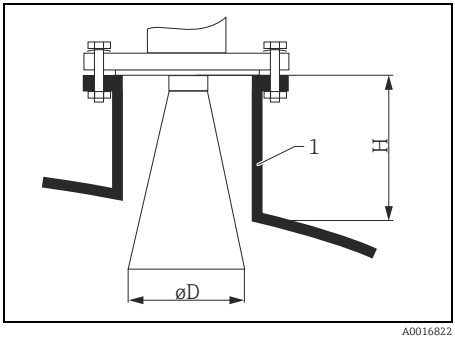

A0016822

1 Nozzle

Antenna size	150 mm (6")	200 mm (8")	250 mm (10")
D [mm (in)]	146 (5.75)	191 (7.52)	241 (9.49)
H [mm (in)]	< 180 (7.09)	< 260 (10.2)	< 350 (13.8)

2.3.3 Orientation

- Recommended distance (1) wall - **outer edge** of nozzle: ~1/6 of tank diameter ("Beam angle", → 11).
- Not in the centre (3), interference can cause signal loss.
- Not above the fill stream (4).
- It is recommended to use a weather protection cover (2) in order to protect the transmitter from direct sun or rain. Assembly and disassembly is simply done by means of a tension clamp (see chapter "Accessories", BA00206F/00/EN).

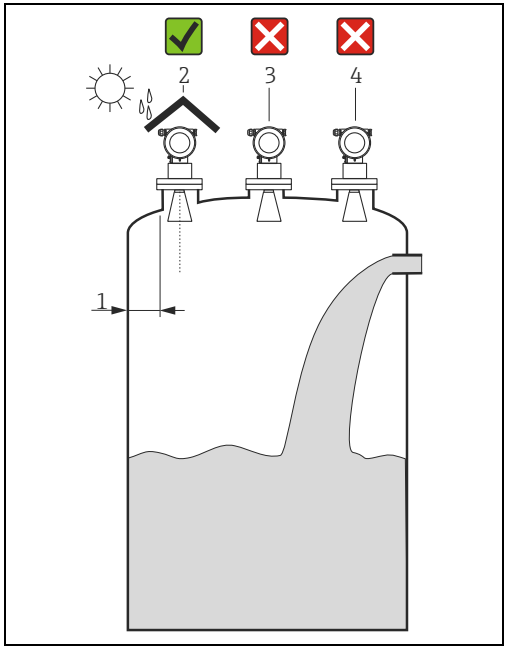

A0020449

2.3.4 Engineering hints

Tank installations

- Avoid any installations (1), like limit switches, temperature sensors, etc., inside the signal beam ("Beam angle", → 🖹 11)
- It is essential that HiHi alarm is below the blocking distance (BD) and the safety distance (SD).
- Symmetrical installations (2), e.g. vacuum rings, heating coils, baffles, etc., can also interfere with the measurement.

Optimization options

- Antenna size: the bigger the antenna, the smaller the beam angle, the less interference echoes.
- Mapping: the measurement can be optimized by means of electronic suppression of interference echoes.
- Antenna alignment: refer to chapter "Optimum mounting position", BA00206F/00/EN.
- Stilling well: a stilling well can always be used to avoid interference. The FMR532 with planar antenna is recommended for stilling wells with a diameter DN 150 (6") and larger.
- Metallic screens (3) mounted at a slope spread the radar signals and can, therefore, reduce interference echoes.

Please contact Endress+Hauser for further information.

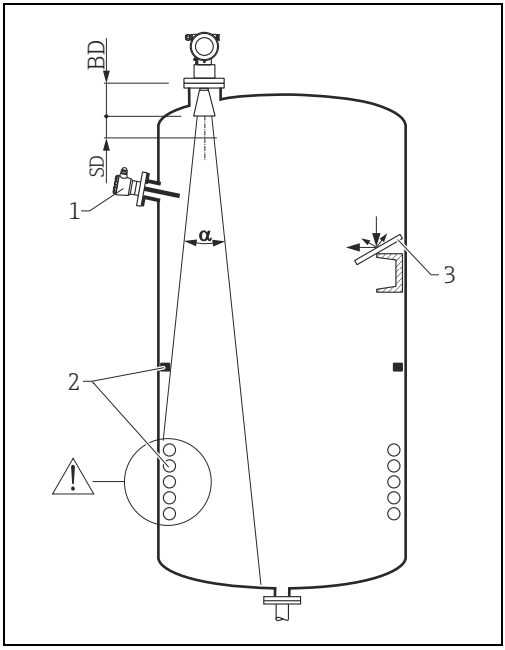

A0020450

2.3.5 Beam angle

The beam angle is defined as the angle α where the energy density of the radar waves reaches half the value of the maximum energy density (3dB-width). Microwaves are also emitted outside the signal beam and can be reflected off interfering installations. Beamwidth diameter **W** as function of antenna type (beam angle **α**) and measuring distance **D**:

Antenna size (Ø-horn)	150 mm (6")	200 mm (8")	250 mm (10")
Beam angle α	23°	19°	15°

Gauge Reference height (GRH)	**Recommended distance from the tank wall (W/2)**		
	150 mm (6")	200 mm (8")	250 mm (10")
3 m (9.8 ft)	0.6 m (2 ft)	0.5 m (1.6 ft)	0.5 m (1.6 ft)
6 m (20 ft)	1.2 m (3.9 ft)	1 m (3.3 ft)	0.8 m (2.6 ft)
9 m (30 ft)	1.8 m (5.9 ft)	1.5 m (4.9 ft)	1.2 m (3.9 ft)
12 m (39 ft)	2.5 m (8.2 ft)	2 m (6.6 ft)	1.5 m (4.9 ft)
15 m (49 ft)	3 m (9.8 ft)	2.5 m (8.2 ft)	2 m (6.6 ft)
20 m (66 ft)	4 m (13 ft)	3 m (9.8 ft)	2.5 m (8.2 ft)
25 m (82 ft)	5 m (16 ft)	3.5 m (11 ft)	2.8 m (9.2 ft)
38 m (125 ft)	–	–	–
40 m (131 ft)	–	–	–

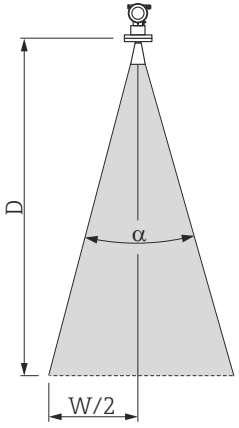

NOTICE

Measurement failure due to false echos!

- Make sure that only one tank wall (**not two** tank walls) is directly hit by the radar beam!

2.3.6 Measuring conditions

- The measuring range begins where the beam hits the tank bottom. Particularly with dish bottoms or conical outlets the level cannot be detected below this point.
- For **overfill prevention**, it is possible to define a safety distance **(SD)** additionally to the blocking distance **(BD)**.
- Depending on its consistence, foam can either absorb microwaves or reflect them off the foam surface. Measurement is possible under certain conditions.
- The smallest possible measuring range **B** depends on the antenna version (see Fig.).
- Tank diameter and height should be at least dimensioned such that a reflection of the radar signal on both sides of the tank can be ruled out (see chapter "Beam angle", → 11)
- In case of media with a low dielectric constant (groups A and B), the tank bottom can be visible through the medium at low levels (low height **C**). Reduced accuracy has to be expected in this range. If this is not acceptable, we recommend positioning the zero point at a distance **C** (see Fig.) above the tank bottom in these applications.
- In principle it is possible to measure up to the tip of the **horn** antenna. However, due to considerations regarding accuracy corrosion and build-up, the end of the measuring range should not be chosen any closer than 50 mm (1.97 in) to the tip of the **horn** antenna (see **A** in Fig.).
- The safety distance **(SD)** is set to 0.1 m (0.3 ft) by default and generating an alarm in case the product level rises inside the safety distance.

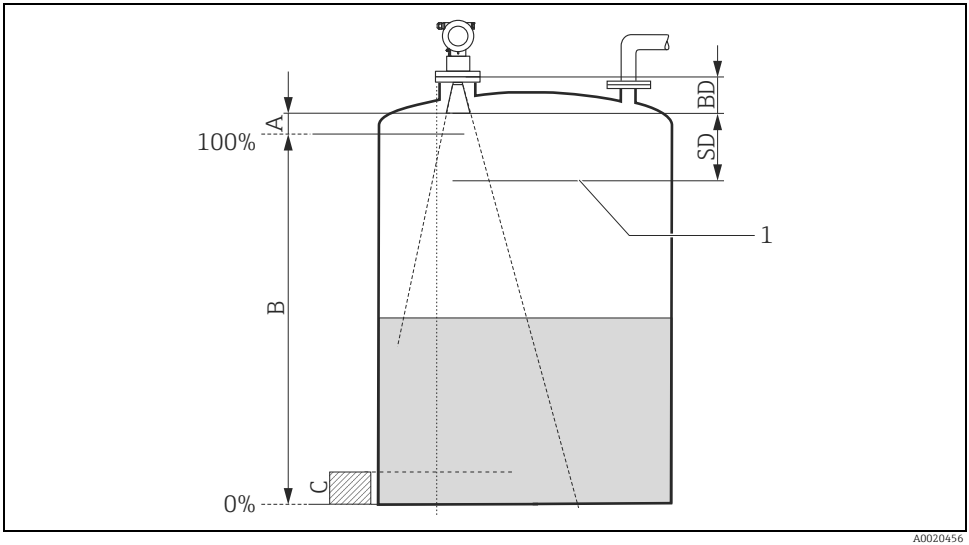

A0020456

1 Max. level

Reference: flange / BD (cf. picture)		Reference: antenna tip (cf. picture)		
Blocking distance	**Safety distance**	**Recommended additional settings**		
BD [m (ft)]	SD [m (ft)]	A [mm (in)]	B [m (ft)]	C [mm (in)]
horn length	0.1 (0.3)	50 (2)	0.5 (1.64)	150 to 300 (6 to 12)

Behaviour if measuring range is exceeded

The behaviour in case of the measuring range being exceeded can be freely set:
The default setting is a current of 22 mA and the generation of a digital warning (E681).

2.3.7 Turn housing

After mounting, the housing can be turned 350° in order to simplify access to the display and the terminal compartment. Proceed as follows to turn the housing to the required position:

1. Undo the allen screw
2. Turn the housing in the required direction
3. Tighten up the allen screw strongly by hand

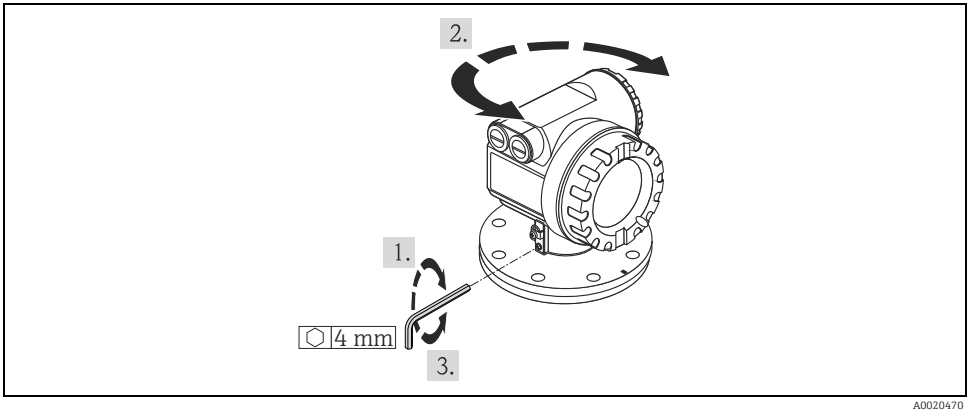

A0020470

2.4 Post-installation check

After the measuring device has been installed, perform the following checks:
- Is the measuring device damaged (visual check)?
- Does the measuring device correspond to the measuring point specifications such as process temperature/pressure, ambient temperature, measuring range, etc.?
- Is the flange marking correctly aligned (→ 7)?
- Have the flange screws been tightened up with the respective tightening torque?
- Are the measuring point number and labeling correct (visual check)?
- Is the measuring device adequately protected against rain and direct sunlight (see chapter "Accessories" in the Operating Instruction (BA00206F/00/EN) on CD-ROM)?

3 Wiring

3.1 Quick wiring guide

When grounding conductive screens, the corresponding directives EN 60079-14 and EN 1127-1 must be observed. Recommendation for safe grounding of conductive screens:

⚠ CAUTION

Before connection please note the following:

- The power supply must be identical to the data on the nameplate.
- Switch off power supply before connecting the device.
- Connect equipotential bonding to transmitter ground terminal before connecting the device.
- Tighten the locking screw:
  It forms the connection between the antenna and the housing ground potential.
- When you use the measuring system in hazardous areas, make sure you comply with national standards and the specifications in the safety instructions (XA's)

3.1.1 Verdrahtung

⚠ CAUTION

Before connection please note the following:

- The power supply to be delivered by a transmitter supply unit.
- Befor removing housing cover at seperate connection compartment turn off the power supply!

1. Insert cable through gland . Use screened, twisted 2-wire or 4-wire cable.

   ⚠ CAUTION

   Only ground screening of the line on sensor side.
2. Make connection (see pin assignment).
3. Tighten cable gland.
4. Replace and tighten off housing cover.
5. Switch on power supply.

A Micropilot S situated in a hazardous area is connected as a **single device** to a **power supply unit and transmitter** situated outside of the hazardous area. In this case, it is recommended that the screen be connected directly to the Micropilot at the housing's earth, whereby the Micropilot S and the power supply unit are connected to the same potential equalization line.

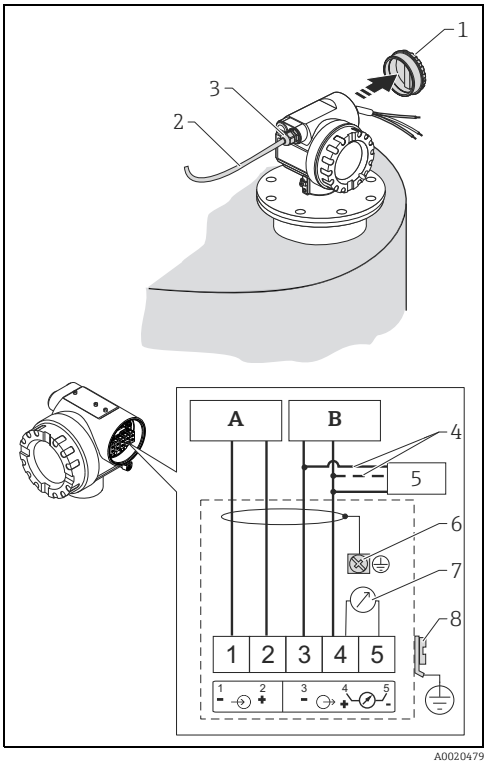

A Power 24 VDC; from a transmitter supply unit
B Signal 24 VDC; from a transmitter supply unit
1 Housing cover
2 Cable
3 Cable gland
4 Alternative connection
5 Commubox FXA195, Field Communicator
6 Shielding cable
7 Test socket; Output current
8 PML (potential matching line)

3.1.2 Wiring with Tank Side Monitor NRF590

⚠ CAUTION

Before connection please note the following:

- Make sure you use the specified cable gland.
- Befor removing housing cover at seperate connection compartment turn off the power supply!

1. Insert cable through gland . Use screened, twisted 2-wire or 4-wire cable.

   ⚠ CAUTION

   Only ground screening of the line on sensor side.
2. Make connection (see pin assignment).
3. Tighten cable gland.
4. Replace and tighten off housing cover.
5. Switch on power supply.

The Micropilot S is - possibly in combination with other devices - connected to a Tank Side Monitor in a hazardous area. In this case, it is recommended that you ground the cable screen centrally at the NRF590 and connect all devices to the same potential equalization line (PML). If, for functional reasons, a capacitive coupling is required between local earth and screen (multiple grounding), ceramic condensers with a dielectric strength of min. 1500 Veff must be used, whereby the total capacitance of 10 nF must not be exceeded. Notes on grounding
interconnected intrinsically safe devices are provided by the FISCO model. If there is no way to set a ground cable between NRF590 and Micropilot S it is possible to ground single side (grounding on side NRF590). In this case it's imperative to ground the shield (on Micropilot S side) via a ceramic capacitor with a maximum capacitance of 10 nF and a minimum insulating voltage of 1500 V.

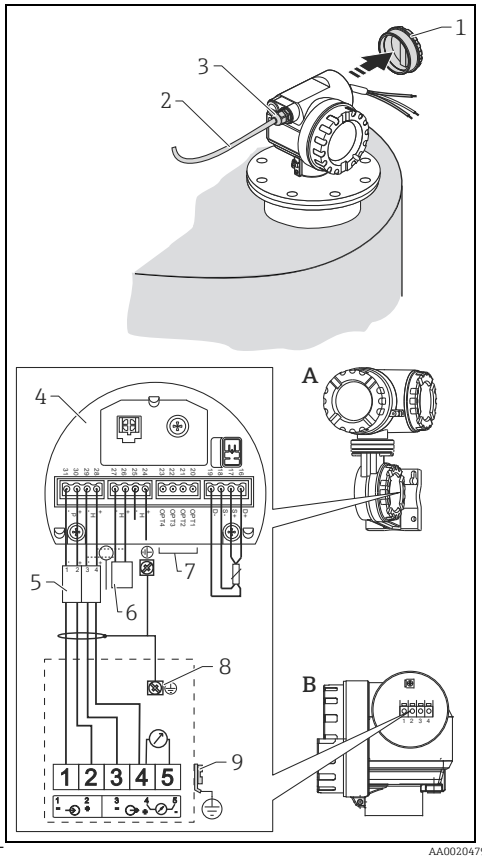

A *Tank Side Monitor NRF590*
B *Micropilot S*
1 *Housing cover*
2 *Cabel*
3 *Cable gland*
4 *Intrinsically safe terminal board*
5 *Only for Micropilot S*
6 *HART Sensor*
7 *Grounding single sided on Tank Side Monitor NRF590*
8 *Shielding cable*
9 *PML (potential equalization line)*

3.2 Connecting the measuring unit

3.2.1 Load HART

Minimum load for HART communication: 250 Ω

3.2.2 Cable entry

Description	Feature	Option model
Cable gland M20	060	2
Thread for cable gland G ½"	060	3
Thread for cable gland NPT ½"	060	4

3.2.3 Supply voltage

DC voltage: per table below

Communication		Terminal voltage	minimum	maximum
Power supply	Standard	U (20 mA) =	16 V	36 V
	Ex	U (20 mA) =	16 V	30 V
Signal	Ex	U (4 mA) =	11.5 V	30 V
		U (20 mA) =	11.5 V	30 V

3.2.4 Power consumption

- Max. 330 mW at 16 V
- Max. 500 mW at 24 V
- Max. 600 mW at 30 V
- Max. 700 mW at 36 V

3.2.5 Current consumption

Max. 21 mA (50 mA inrush current).

3.2.6 Overvoltage protector

- The level transmitter Micropilot S is equipped with an internal overvoltage protector (600 Vrms surge arrester) according to EN/IEC 60079-14 or EN/IEC 60060-1 (impulse current test 8/20 µs, Î = 10 kA, 10 pulses). Additionally, the device is protected by a galvanic insulation of 500 Vrms between the power supply and the (HART) current ouput. Connect the metallic housing of the Micropilot S to the tank wall or screen directly with an electrically conductive lead to ensure reliable potential matching.
- Installation with additional overvoltage protector HAW560Z/HAW562Z (see XA00081F "Safety instructions for electrical apparatus certified for use in explosion-hazardous areas").
  - Connect the external overvoltage protector and the Micropilot S transmitter to the local potential matching system.
  - Potentials shall be equalised both inside and outside the explosion hazardous area.
  - The cable connecting the overvoltage protector and the Micropilot S transmitter shall not exceed 1 m (3.3 ft) in length.
  - The cable shall be protected e.g. routed in an armoured hose.

3.2.7 Power supply

- For stand alone operation via two Endress+Hauser RN221N.
- Integrated in tank gauging system via Endress+Hauser Tank Side Monitor NRF590 (recommended operation mode).

3.2.8 Highly accurate measurement

For highly accurate measurements the measured variable must be transmitted using HART protocol to ensure the necessary resolution.

3.3 Equipotential bonding

Connect the Equipotential bonding to the external ground terminal of the transmitter.

3.4 Degree of protection

- Housing: IP65/68; NEMA 4X/6P
- Antenna: IP65/68; NEMA 4X/6P

3.5 Post-connection check

After wiring the measuring device, perform the following checks:
- Is the terminal allocation correct (→ 🖹 15)?
- Is the cable gland tight?
- Is the housing cover screwed tight?
- If auxiliary power is available:
  Is the device ready for operation and does the liquid crystal display show any value?
- Is grounding (tank potential) correct?

4 Operation

4.1 General structure of the operating menu

The operating menu is made up of two levels:
- **Function groups (00, 01, 03, ..., 0C, 0D):** The individual operating options of the device are split up roughly into different function groups. The function groups that are available include, e.g.: "**basic setup**", "**safety settings**", "**output", "display**", etc.
- **Functions (001, 002, 003, ..., 0D8, 0D9):** Each function group consists of one or more functions. The functions perform the actual operation or parameterisation of the device. Numerical values can be entered here and parameters can be selected and saved. The available functions of the "**basic setup**" **(00)** function group include, e.g.: "**tank shape**" **(002)**, "**medium property**" **(003)**, "**process cond.**" **(004)**, "**empty calibr**" **(005)**, etc.

If, for example, the application of the device is to be changed, carry out the following procedure:

1. Select the "**basic setup**" **(00)** function group.
2. Select the "**tank shape**" **(002)** (function (where the existing tank shape is selected).

4.1.1 Identifying the functions

For simple orientation within the function menus (see chapter "Apendix" in BA00206F/00/EN), for each function a position is shown on the display.



1 Function group
2 Function

The first two digits identify the function group:
- **basic setup** 00
- **safety settings** 01
- **linearisation** 04

. . .

The third digit numbers the individual functions within the function group:

- **basic setup** 00 →
  - **tank shape** 002
  - **medium property** 003
  - **process cond.** 004
  - . . .

Here after the position is always given in brackets (e.g. "**tank shape**" **(002)**) after the described function.

4.2 Display and operating elements

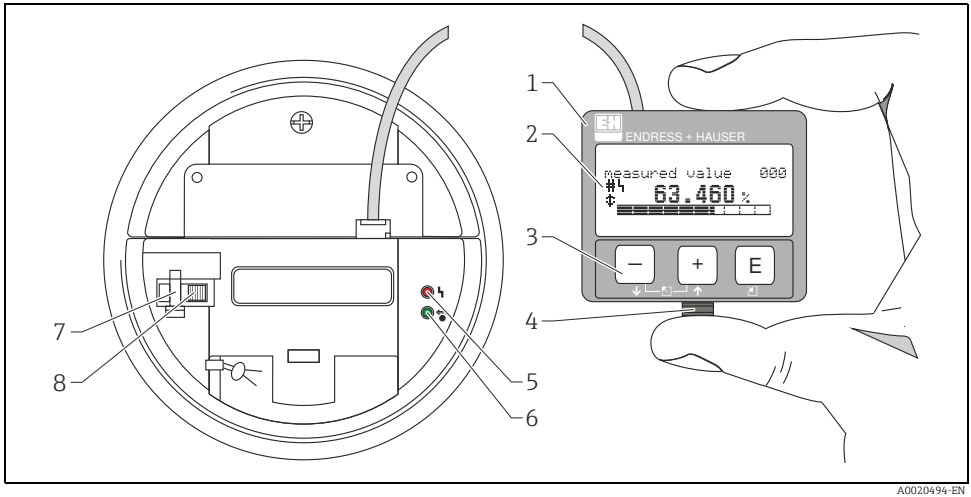

A0020494-EN

1	*LCD (liquid crystal display)*	5	*Red LED*
2	*Symbols*	6	*Green LED*
3	*Operating keys*	7	*Custody locking switch*
4	*Snap-fit*	8	*Sealing pin*

NOTICE

To access the display the cover of the electronic compartment may be removed even in hazardous area. The LCD-display can be removed to ease operation by simply pressing the snap-fit (see graphic above). It is connected to the device by means of a 500 mm (19.7 in) cable.

4.2.1 Display

Liquid crystal display (LCD)

Four lines with 20 characters each. Display contrast adjustable through key combination.

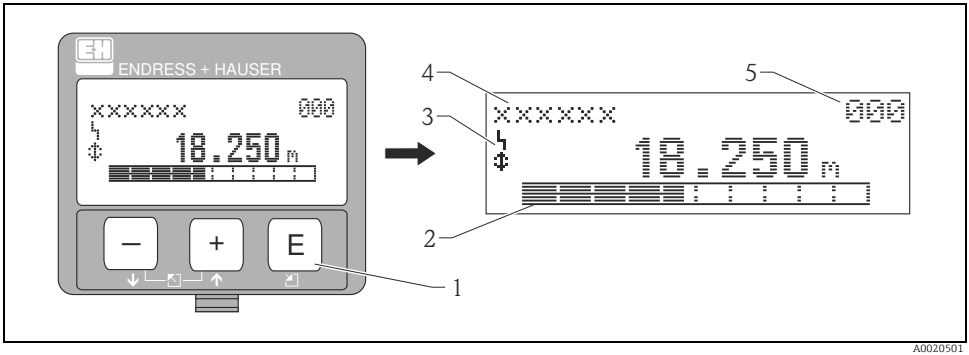

A0020501

1 Operating keys
2 Bargraph
3 Symbols
4 Function name
4 Parameter Identification number

4.2.2 Display symbols

The following table describes the symbols that appear on the liquid crystal display:

Symbols	Meaning
	ALARM_SYMBOL This alarm symbol appears when the device is in an alarm state. If the symbol flashes, this indicates a warning.
	LOCK_SYMBOL This lock symbol appears when the device is locked, i.e. if no input is possible.
	COM_SYMBOL This communication symbol appears when a data transmission via e.g. HART is in progress.
	Calibration to regulatory standards disturbed If the device is not locked or it cannot guarantee the calibration to regulatory standards, the situation will be indicated on the display via the symbol.

Light emitting diods (LEDs):

There is a green and a red LED besides the Liquid crystal display.

LED (LED)	Meaning
red LED continuously on	Alarm
red LED flashes	Warning
red LED off	No alarm
green LED continuously on	Operation
Green LED flashes	Communication with external device

4.2.3 Function of the keys

Key(s)	Meaning
+ or ↑	▪ Navigate upwards in the selection list. ▪ Edit numeric value within a function.
− or ↓	▪ Navigate downwards in the selection list. ▪ Edit numeric value within a function.
esc − + or ←	Navigate to the left within a function group.
E	▪ Navigate to the right within a function group. ▪ Confirm entry.
+ and E or − and E	Contrast settings of the LCD.
+ and − and E	Hardware lock / unlock After a hardware lock, an operation of the device via display or communication is not possible! The hardware can only be unlocked via the display. An unlock parameter must be entered to do so.

4.2.4 Custody locking switch

Access to the electronics can be prevented by means of a custody locking switch that locks the device settings. The custody locking switch can be sealed for custody transfer applications.

5 Commissioning

5.1 Function check

Make sure that all final checks have been completed before you start up your measuring point:
- Checklist "Post installation check", → 14.
- Checklist "Post connection check", → 19.

5.2 Switching on the measuring device

When the device is switched on for the first time, the following messages appear in a sequence of 5 s on the display: software version, communication protocol and language selection.

On-site display		Meaning
Language	092	Select the language (this message appears the first time the device is switched on)
✔ English		
Deutsch		
Français		

distance unit	0C5	Select the basic unit (this message appears the first time the device is switched on)
✔ m		
ft		
mm		

measured value	000	The current measured value is displayed
63.455 %		

After E is pressed, you reach the group selection

Group selection	00→	This selection enables you to perform the basic setup
✔ basic setup		
safety settings		
linearisation		

5.3 Overview Basic Setup

Basic setup (standard)

Tank shape: flat ceiling

Measuring cond.: **unknown**

Process cond.: **standard**

Empty calibr.

Full calibr.

Pipe diameter
(only for bypass/stilling well)

Distance / meas. value

According to envelope curve

Distance incorrect

Start mapping

Check distance

Range of mapping

Distance correct

According to hand dipping [1)]

Meas. value incorrect

Adjust "empty calibr."

Meas. value correct

History reset

Option

Dip table; first point corrects **offset**; further points correct linearity

Description see BA00217F/00/EN

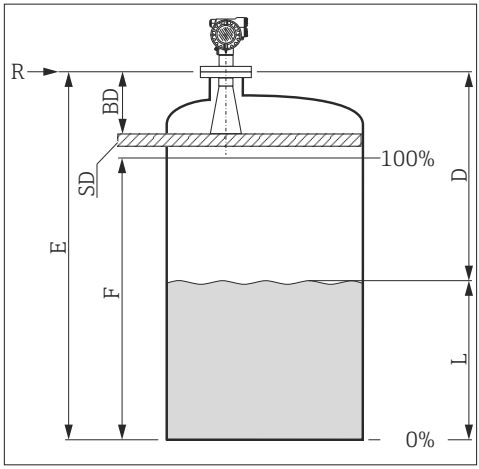

E *Empty calibr. (=zero); settings in 005*
D *Distance (distance flange/product); display in 0A5*
SD *Safety settings; settings in 015*
F *Full calibr. (=span); settings in 006*
L *Level; display in 0A6*
BD *Blocking distance; settings in 059*
R *Flange; reference point of measurement*

1) Note!
the dipped value should be taken at a level ≥2 m (6.6 ft).

⚠ CAUTION

To successfully commission a precise measurement to the nearest mm, it is important you carry out a history reset on first installation after mechanical installation and after the basic setup of the device. Only after a history reset the mounting calibration is carried out. Enter the measurement offset as the first point in the dip table for the mounting calibration. When a value is dipped at a later date, make a second entry into the dip table, using the semi-automatic mode. This way, you can easily carry out a linear correction of the measurement. When configuring the function in "basic setup" (00) please take into account the following notes:

- Select the functions as described in BA00206F/00/EN.
- Some functions can only be used depending on the parameterisation of the device. For example, the pipe diameter of a stilling well can only be entered if "**stilling well**" was selected beforehand in the "**tank shape**" **(002)** function.
- Certain functions (e.g. starting an interference echo mapping (053)) prompt you to confirm your data entries. Press [+] or [−] to select "**YES**" and press [E] to confirm. The function is now started.
- If you do not press a key during a configurable time period (» function group "**display**" **(09)**), an automatic return is made to the home position (measured value display).

NOTICE

After finishing the basic setup pairs of values "measuring value Micropilot S - hand dipping value" should be collected and if necessary a further correction should be performed through entering characteristic pairs of values into the dip table. Information on the usage of the dip table, see chapter "Dip table" in BA00206F/00/EN.

NOTICE

Data handling during setup

- The device continues to measure while data entry is in progress, i.e. the current measured values are output via the signal outputs in the normal way.
- If the envelope curve mode is active on the display, the measured values are updated in a slower cycle time. Thus, it is advisable to leave the envelope curve mode after the measuring point has been optimised.
- If the power supply fails, all preset and parameterised values remain safely stored in the EEPROM.
- All functions are described in detail, as is the overview of the operating menu itself, in the manual **"BA00217F - Description of Instrument Functions"**, which can be found on the enclosed CD-ROM.
- The default values of the parameters are typed in **boldface**.

5.4 Basic Setup with device display VU331

5.4.1 Function "measured value" (000)

On-site display	
measured value	000
63.455 %	

Meaning

This function displays the current measured value in the selected unit (see "**customer unit**" **(042)**) function). The number of digits after decimal point can be selected in the "**no.of decimals**" **(095)** function. The length of the bargraph corresponds to the percental value of the present measured value with regard to the span.

5.4.2 Function group "basic setup" (00)

On-site display	
Group selection	00→
✔ basic setup	
safety settings	
linearisation	

Function "tank shape" (002)

On-site display	
tank shape	002
✔ flat ceiling	
sphere.	
dome ceiling	

Meaning

This function is used to select the tank shape.

Further options:
- Dome ceiling
- Horizontal cyl
- Bypass (Not weights and measures approved, accuracy is not guaranteed. Recommendation: FMR532)
- Stilling well (Not weights and measures approved, accuracy is not guaranteed. Recommendation: FMR532)
- **Flat ceiling** (Typical ceiling of storage tanks: a slight slope of only a few degrees can be neglected)
- Sphere

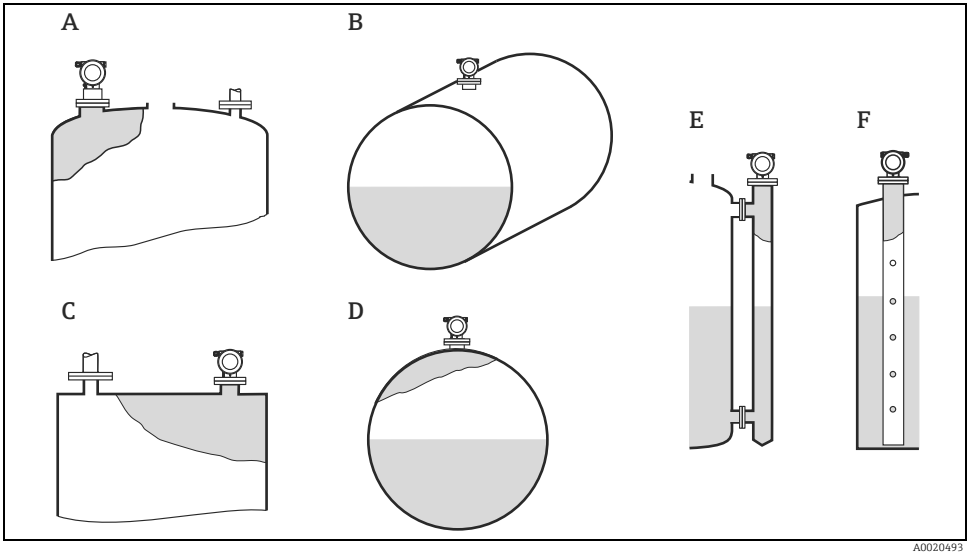

A Dome ceiling
B horizontal cyl
C Flat ceiling
D Sphere
E Bypass
F Stilling well

Function "medium property." (003)

On-site display	
medium property	003
✔ unknown	
DC: < 1.9.	
DC: 1.9...4	

Meaning

This function is used to select the dielectric constant.

Further options:
- **unknown**
- DC: < 1.9
- DC: 1.9 to 4
- DC: 4 to 10
- DC: > 10

Media group	DC (εr)	Examples
A	1.4 to 1.9	Non-conducting liquids, e.g. liquefied gas (LPG). For more information please contact your Endress+Hauser representative.
B	1.9 to 4	Non-conducting liquids, e.g. benzene, oil, toluene, white products, black products, crudes, bitumen/asphalts, ...
C	4 to 10	E.g. concentrated acids, organic solvents, esters, aniline, alcohol, acetone, ...
D	>10	Conducting liquids, e.g. aqueous solutions, dilute acids and alkalis

Function "process cond." (004)

On-site display	
process cond.	004
✔ standard	
calm surfaces.	
turb. surface	

Meaning

This function is used to select the process conditions.

Further options:
- **Standard**
- Calm surface
- Turb. surface
- Agitator
- Fast change
- Heavy conditions
- Test: no filter

Standard	Calm surface
For all applications that do not fit into any of the following groups.	Storage tanks with immersion tube or bottom filling
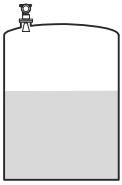 A0020531	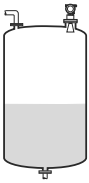 A0020533
The filter and output damping are set to average values.	The averaging filters and output damping are set to high values. → Steady meas. value → Precise measurement → Slower reaction time

NOTICE

When FMR530 is ordered as a Custody Transfer Specification, phase evaluation is enabled. The phase evaluation of the Micropilot S is only activated if you select the measuring conditions "standard", "calm surface" or "heavy conditions". If, however, "heavy conditions" is selected, no index values are stored. We strongly recommend that, in the case of rough product surfaces or rapid filling, you activate the appropriate application parameters.

Function "empty calibr." (005)

On-site display			
empty calibr.			005
	5.000	m	
distance process			
conn. to min. level			

Meaning

This function is used to enter the distance from the flange (reference point of the measurement) to the minimum level (= zero).

⚠ CAUTION

For dish bottoms or conical outlets, the zero point should be no lower than the point at which the radar beam hits the bottom of the tank.

Function "full calibr." (006)

On-site display			
full calibr.			006
	5.000	m	
span			

Meaning

This function is used to enter the distance from the minimum level to the maximum level (= span). In principle, it is possible to measure up to the tip of the antenna. However, due to considerations regarding corrosion and build-up, the end of the measuring range should not be chosen any closer than 50 mm (1.97 in) to the tip of the antenna.

NOTICE

If bypass or stilling well was selected in the "tank shape" (002) function, the pipe diameter is requested in the following step.

Function "pipe diameter" (007)

On-site display		
pipe diameter		007
	204.425 m	
inner diameter of		
bypass/stilling well		

Meaning

This function is used to enter the pipe diameter of the stilling well or bypass pipe.

Microwaves propagate slower in pipes than in free space. This effect depends on the inside diameter of the pipe and is automatically taken into account by the Micropilot. It is only necessary to enter the pipe diameter for applications in a bypass or stilling well.

NOTICE

FMR530 is a hi-accuracy free-space radar gauge. It is not recommended for stilling pipe applications. For stilling pipe applications we strongly recommend model FMR532.

Function "dist./ meas. value" (008)

On-site display			
dist./meas.value			008
dist.	2.463	m	
m.value.	63.414	%	

Meaning

The **distance** measured from the reference point to the product surface and the **level** calculated with the aid of th empty adjustment are displayed. Check whether the values correspond to the actual level or the actual distance.
The following cases can occur:

- Distance correct - meas. value correct:
  Continue with the next function **"check distance" (051)**
- Distance correct - meas. value incorrect:
  Check **"empty calibr." (005)**
- Distance incorrect - meas. value incorrect:
  Continue with the next function **"check distance" (051)**

Function "check distance" (051)

On-site display	
check disttance	051
✔ dist. unknown	
manual	
distance = ok	

Meaning

This function triggers the mapping of interference echoes. To do so, the measured distance must be compared with the actual distance to the product surface.

Further options:
- distance = ok
- dist. too small
- dist. too big
- **dist. unknown**
- manual

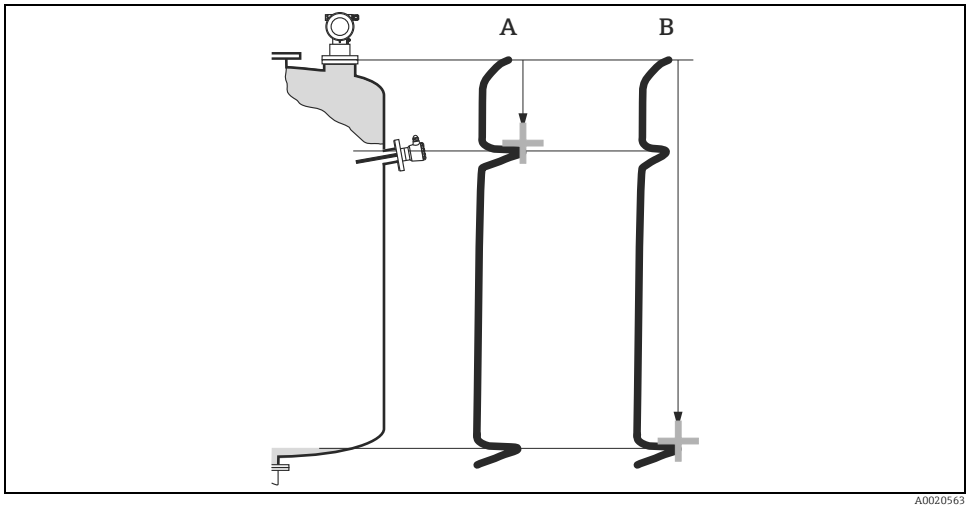

A0020563

A Distance to small
B Distance ok

distance = ok
- mapping is carried out up to the currently measured echo
- The range to be suppressed is suggested in the "**range of mapping.**" **(052)** function

NOTICE

In any case, it is wise to carry out a mapping even in this case.

dist. too small
- At the moment, an interference is being evaluated
- Therefore, a mapping is carried out including the presently measured echoes
- The range to be suppressed is suggested in the "**range of mapping.**" **(052)** function

dist. too big
- This error cannot be remedied by interference echo mapping
- Check the application parameters **(002), (003), (004)** and "**empty calibr.**" **(005)**

dist. unknown
If the actual distance is not known, no mapping can be carried out.

manual
A mapping is also possible by manual entry of the range to be suppressed. This entry is made in the "**range of mapping.**" **(052)** function.

⚠ CAUTION

The range of mapping must end 0.5 m (1.6 ft) before the echo of the actual level. For an empty tank, do not enter E, but E – 0.5 m (1.6 ft). If a mapping already exists, it is overwriten up to the distance specified in "range of mapping" (052). Beyond this value the existing mapping remains unchanged.

Function "range of mapping" (052)

On-site display			
range of mapping			052
	0.000	m	
input of mapping range			

Meaning

This function displays the suggested range of mapping. The reference point is always the reference point of the measurement (→ 25). This value can be edited by the operator. For manual mapping, the default value is: 0 m.

Function "start mapping" (053)

On-site display	
start mapping	053
✔ off	
on	

Meaning

This function is used to start the interference echo mapping up to the distance given in "**range of mapping**" **(052)**.

Selection:
- **off**
  No mapping is carried out
- **on**
  Mapping is started

During the mapping process the message "**record mapping!**" is displayed.

⚠ CAUTION

A mapping will be recorded only, if the device is not in alarm-state.

Function "dist./meas.value" (008)

On-site display		
dist./meas.value		008
dist.	2.463	m
m.value.	63.414	%

Meaning

The **distance** measured from the reference point to the product surface and the **level** calculated with the aid of th empty adjustment are displayed. Check whether the values correspond to the actual level or the actual distance.
The following cases can occur:
- Distance correct - meas. value correct:
  Continue with the next function **"check distance" (051)**
- Distance correct - meas. value incorrect:
  Check **"empty calibr." (005)**
- Distance incorrect - meas. value incorrect:
  Continue with the next function **"check distance" (051)**

Function "history reset" (009)

On-site display	
history reset	009
✔ no	
yes	

Meaning

By this function a history reset of the device is performed, i.e. the correspondance table between level an index values is deleted. A new correspondance table will be filled and stored after the history reset.

⚠ CAUTION

A history reset must be performed after:

- first installation or
- change of basic setup or
- change of the installation situation.

In this case also effect a reset of the dip table in function "**dip table mode**" **(033)**.

On-site display
Return to Group Selection

Meaning

After 3 s, the following message appears

Group selection	00→
✔ basic setup	
safety settings	
linearisation	

NOTICE

After the basic setup, an evaluation of the measurement with the aid of the envelope curve ("envelope curve" (0E) function group) is recommended.

5.5 Envelope curve with device display VU331

After the basic setup, an evaluation of the measurement with the aid of the envelope curve ("**display" (09)** function group) is recommended).

5.5.1 Function "plot settings" (09A)

On-site display	
plot settings	09A
✔ envelope curve	
env. curve+FAC	
env. curve+cust.map	

Here you can select which information is shown on the display:
- **Envelope curve**
- Env. curve+FAC (for FAC see BA00217F/00/EN)
- Env. curve+cust.map (i.e. the tank map is also displayed)

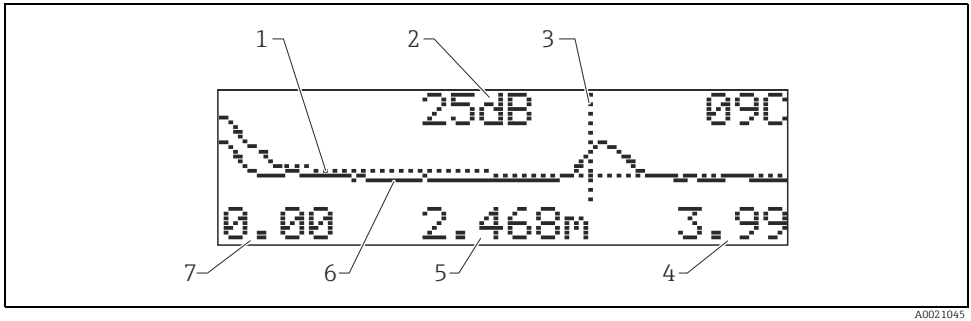

A0021045

1 Tank map / FAC
2 Echo quality (S/N)
3 Marking of evaluated echo
4 End value of representation
5 Distance of current echo
6 Envelope curve
7 Begin value of representation

5.5.2 Function "recording curve" (09B)

This function determines whether the envelope curve is read as:
- **single curve** or
- cyclic

On-site display	
recording curve	09B
✔ single curve	
cyclic	

NOTICE

Data handling during setup

- ▶ If the envelope curve mode is active on the display, the measured values are updated in a slower cycle time. Thus, it is advisable to leave the envelope curve mode after the measuring point has been optimised.
- ▶ If the level of echo is very weak or there is a heavy interference echo, an **orientation** of the Micropilot can contribute to an optimisation of the measurement (increase of the level echo/reduction of the interference echo) (see chapter "Orientation of the Micropilot", in BA00206F/00/EN).

5.5.3 Function "envelope curve display"" (09C)

The envelope curve is displayed in this function. You can use it to obtain the following information:

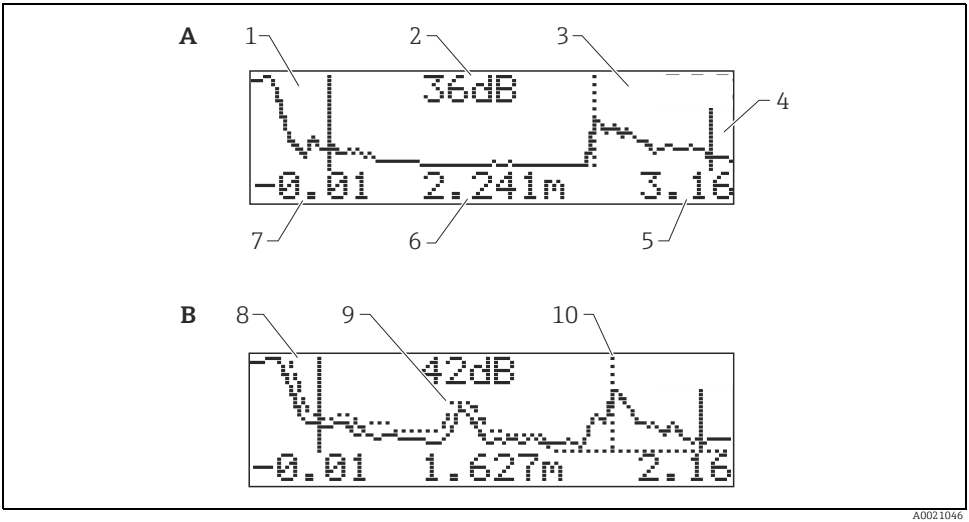

A0021046

A Envelope curve only
B Envelope curve and interference echo suppression (map)
1 Full calibr.
2 Quality of evaluated echo
3 Evaluated echo is marked
4 Empty calibr.
5 Maximum distance of the plot
6 Distance of the evaluated echo
7 Minimum distance of the plot
8 Map
9 Interference echo
10 Level echo



www.addresses.endress.com

Endress+Hauser

People for Process Automation