Level | Pressure | Flow | Temperature | Liquid Analysis | Registration | Systems Components | Services | Solutions

Operating Instructions

Micropilot M FMR240

Level-Radar

HART COMMUNICATION PROTOCOL

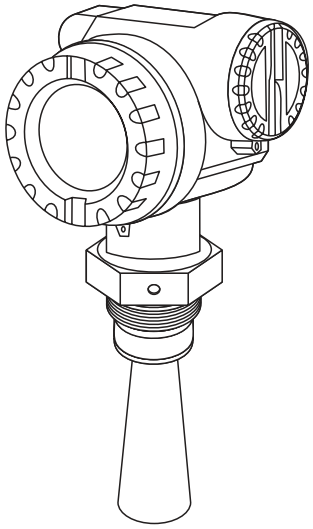

BA220F/00/EN/03.10
71112090

Valid as of software version:
01.05.00

Endress+Hauser
People for Process Automation

Brief operating instructions

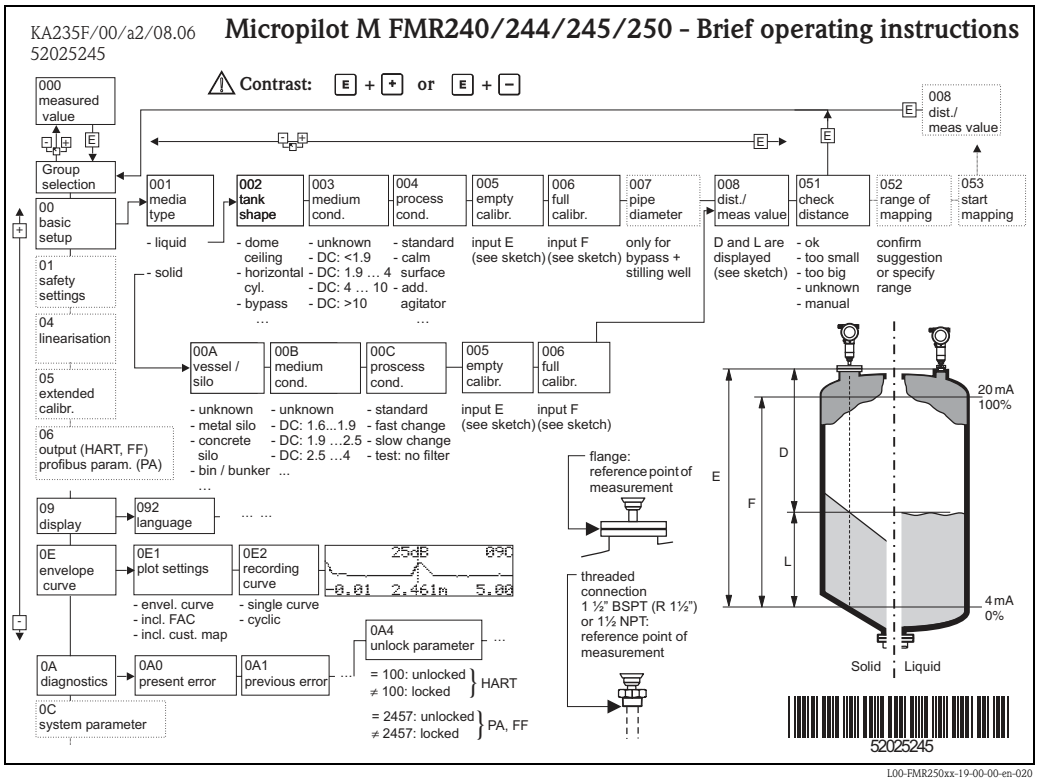

Note!
This operating manual explains the installation and initial start-up for the level transmitter. All functions that are required for a typical measuring task are taken into account here. In addition, the Micropilot M provides many other functions that are not included in this operating manual, such as optimising the measuring point and converting the measured values.

An **overview of all device functions** can be found → 90.

The operating manual BA291F/00/EN "Description of Instrument Functions" provides an **extensive description of all device functions**, which can be found on the enclosed CD-ROM.

Table of contents

1 Safety instructions 4

1.1 Designated use 4
1.2 Installation, commissioning and operation 4
1.3 Operational safety and process safety 4
1.4 Notes on safety conventions and symbols 5

2 Identification 6

2.1 Device designation 6
2.2 Scope of delivery 9
2.3 Certificates and approvals 9
2.4 Registered trademarks 9

3 Mounting 10

3.1 Quick installation guide 10
3.2 Incoming acceptance, transport, storage 11
3.3 Installation conditions 12
3.4 Installation instructions 22
3.5 Post-installation check 28

4 Wiring 29

4.1 Quick wiring guide 29
4.2 Connecting the measuring unit 31
4.3 Recommended connection 34
4.4 Degree of protection 34
4.5 Post-connection check 34

5 Operation 35

5.1 Quick operation guide 35
5.2 Display and operating elements 37
5.3 Local operation 40
5.4 Display and acknowledging error messages 43
5.5 HART communication 44

6 Commissioning 47

6.1 Function check 47
6.2 Switching on the measuring device 47
6.3 Basic Setup 48
6.4 Basic Setup with the device display 50
6.5 Basic Setup with the Endress+Hauser operating program 62

7 Maintenance 66

8 Accessories 67

8.1 Weather protection cover 67
8.2 Commubox FXA195 HART 67
8.3 Commubox FXA291 67
8.4 ToF Adapter FXA291 67
8.5 Remote display FHX40 68
8.6 Horn cover for 80 mm (3") and 100 mm (4") horn antenna 69

9 Trouble-shooting 71

9.1 Trouble-shooting instructions 71
9.2 System error messages 72
9.3 Application errors in liquids 74
9.4 Application errors in solids 76
9.5 Orientation of the Micropilot 77
9.6 Spare Parts 79
9.7 Return 80
9.8 Disposal 80
9.9 Software history 80
9.10 Contact addresses of Endress+Hauser 80

10 Technical data 81

10.1 Additional technical data 81

11 Appendix 90

11.1 Operating menu HART 90
11.2 Patents 92

Index 93

1 Safety instructions

1.1 Designated use

The Micropilot M is a compact radar level transmitter for the continuous, contactless measurement of liquids, pastes, sludge and solids. The device can also be freely mounted outside closed metal vessels because of its operating frequency of about 26 GHz and a maximum radiated pulsed energy of 1 mW (average power output 1 μW). Operation is completely harmless to humans and animals.

1.2 Installation, commissioning and operation

The Micropilot M has been designed to operate safely in accordance with current technical, safety and EU standards. If installed incorrectly or used for applications for which it is not intended, however, it is possible that application-related dangers may arise, e. g. product overflow due to incorrect installation or calibration. For this reason, the instrument must be installed, connected, operated and maintained according to the instructions in this manual: personnel must be authorised and suitably qualified. The manual must have been read and understood, and the instructions followed. Modifications and repairs to the device are permissible only when they are expressly approved in the manual.

1.3 Operational safety and process safety

Alternative monitoring measures must be taken to ensure operational safety and process safety during configuration, testing and maintenance work on the device.

Hazardous areas

Measuring systems for use in hazardous environments are accompanied by separate "Ex documentation", which is an integral part of this Operating Manual. Strict compliance with the installation instructions and ratings as stated in this Additional documentation is mandatory.

- Ensure that all personnel are suitably qualified.
- Observe the specifications in the certificate as well as national and local regulations.

1.3.1 FCC approval

This device complies with part 15 of the FCC Rules. Operation is subject to the following two conditions:

1. This device may not cause harmful interference.
2. This device must accept any interference received, including interference that may cause undesired operation.



Caution!
Changes or modifications not expressly approved by the part responsible for compliance could void the user's authority to operate the equipment.

1.4 Notes on safety conventions and symbols

In order to highlight safety-relevant or alternative operating procedures in the manual, the following conventions have been used, each indicated by a corresponding symbol in the margin.

Safety conventions	
	**Warning!** A warning highlights actions or procedures which, if not performed correctly, will lead to personal injury, a safety hazard or destruction of the instrument.
	**Caution!** Caution highlights actions or procedures which, if not performed correctly, may lead to personal injury or incorrect functioning of the instrument.
	**Note!** A note highlights actions or procedures which, if not performed correctly, may indirectly affect operation or may lead to an instrument response which is not planned.
Explosion protection	
	**Device certified for use in explosion hazardous area** If the device has this symbol embossed on its name plate it can be installed in an explosion hazardous area.
	**Explosion hazardous area** Symbol used in drawings to indicate explosion hazardous areas. Devices located in and wiring entering areas with the designation “explosion hazardous areas” must conform with the stated type of protection.
	**Safe area (non-explosion hazardous area)** Symbol used in drawings to indicate, if necessary, non-explosion hazardous areas. Devices located in safe areas still require a certificate if their outputs run into explosion hazardous areas.
Electrical symbols	
	**Direct voltage** A terminal to which or from which a direct current or voltage may be applied or supplied.
	Alternating voltage A terminal to which or from which an alternating (sine-wave) current or voltage may be applied or supplied.
	**Grounded terminal** A grounded terminal, which as far as the operator is concerned, is already grounded by means of an earth grounding system.
	**Protective grounding (earth) terminal** A terminal which must be connected to earth ground prior to making any other connection to the equipment.
	**Equipotential connection (earth bonding)** A connection made to the plant grounding system which may be of type e. g. neutral star or equipotential line according to national or company practice .
	**Temperature resistance of the connection cables** States, that the connection cables must be resistant to a temperature of at least 85 °C (185 °F).

2 Identification

2.1 Device designation

2.1.1 Nameplate

The following technical data are given on the instrument nameplate:

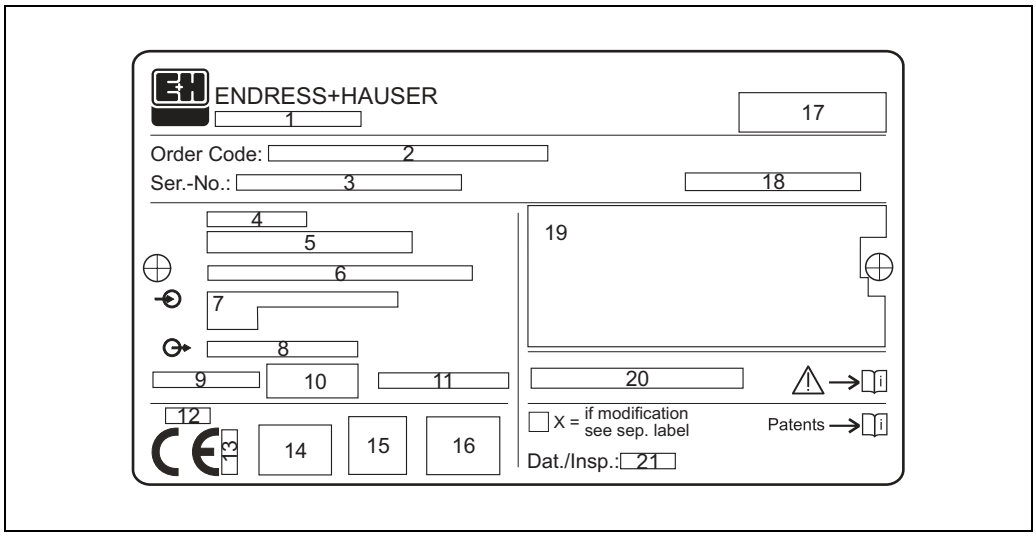

Information on the nameplate of the Micropilot M

1 Instrument designation
2 Order code
3 Serial number
4 Process pressure
5 Process temperature
6 Length (optional)
7 Power supply
8 Current supply
9 Ambient temperature
10 Cable specification
11 Factory sealed
12 Radio equipment number
13 TÜV identification mark
14 Certificate symbol (optional) e.g. Ex, NEPSI
15 ertificate symbol (optional) e.g. 3A
16 Certificate symbol (optional) e.g. SIL, FF
17 Place of production
18 Degree of protection e.g. IP65, IP67
19 Certificates and approvals
20 Document number of safety instructions e.g. XA, ZD, ZE
21 Dat./Insp. xx / yy (xx = week of production, yy = year of production)

2.1.2 Ordering structure

This overview does not mark options which are mutually exclusive.

10	Approval:
	A Non-hazardous area
	F Non-hazardous area, WHG
	1 ATEX II 1/2G EEx ia IIC T6
	6 ATEX II 1/2G EEx ia IIC T6, WHG
	3 ATEX II 1/2G EEx em (ia) IIC T6
	8 ATEX II 1/2G EEx em (ia) IIC T6, WHG
	4 ATEX II 1/2G EEx d (ia) IIC T6
	B ATEX II 1/2G, II 1/2D, Alu blind cover, ATEX II 1/2G EEx ia IIC T6, ATEX II 1/2D
	H ATEX II 1/2G EEx ia IIC T6, ATEX II 3D
	G ATEX II 3G EEx nA II T6
	S FM IS - Cl.I Div.1 Gr. A-D, zone 0, 1, 2
	T FM XP - Cl.I Div.1 Group A-D, zone 1, 2
	N CSA General Purpose
	U CSA IS - Cl.I Div.1 Group A-D, zone 0, 1, 2
	V CSA XP - Cl.I Div.1 Group A-D, zone 1, 2
	L TIIS EEx d (ia) IIC T4
	D IECEx Zone 0/1, Ex ia IIC T6
	E IECEx Zone 0/1, Ex d (ia) IIC T6
	I NEPSI Ex ia IIC T6
	J NEPSI Ex d (ia) ia IIC T6
	R NEPSI Ex nAL IIC T6
	Y Special version

20	Antenna:
	E 40mm/1-1/2", gas-tight feed through
	F 50mm/2", gas-tight feed through
	G 80mm/3", gas-tight feed through
	H 100mm/4", gas-tight feed through
	2 40mm/1-1/2"
	3 50mm/2"
	4 80mm/3"
	5 100mm/4"
	9 Special version

30	Antenna Seal; Temperature:
	V FKM Viton; -20…150°C/-4…302°F
	E FKM Viton GLT; -40…150°C/-40…302°F
	K Kalrez; -20…150°C/-4…302°F
	Y Special version

40	Antenna Extension
	1 Not selected
	2 100 mm/4"
	9 Special version

50	Process Connection:	
	GGJ	Thread EN10226 R1-1/2, 316L
	GNJ	Thread ANSI NPT1-1/2, 316L
	TDJ	Tri-Clamp ISO2852 DN40-51 (2"), 316L
	TLJ	Tri-Clamp ISO2852 DN70-76.1 (3"), 316L
	CFJ	DN50 PN10/16 B1, 316L flange EN1092-1 (DIN2527 C)
	CGJ	DN50 PN25/40 B1, 316L flange EN1092-1 (DIN2527 C)
	CFM	DN50 PN10/16, AlloyC22 > 316L flange EN1092-1 (DIN2527)
	CGM	DN50 PN25/40, AlloyC22 > 316L flange EN1092-1 (DIN2527)
	CMJ	DN80 PN10/16 B1, 316L flange EN1092-1 (DIN2527 C)
	CNJ	DN80 PN25/40 B1, 316L flange EN1092-1 (DIN2527 C)
	CMM	DN80 PN10/16, AlloyC22 > 316L flange EN1092-1 (DIN2527)
	CNM	DN80 PN25/40, AlloyC22 > 316L flange EN1092-1 (DIN2527)
	CQJ	DN100 PN10/16 B1, 316L flange EN1092-1 (DIN2527 C)
	CRJ	DN100 PN25/40 B1, 316L flange EN1092-1 (DIN2527 C)
	CQM	DN100 PN10/16, AlloyC22 > 316L flange EN1092-1 (DIN2527)
	CRM	DN100 PN25/40, AlloyC22 > 316L flange EN1092-1 (DIN2527)
	CWJ	DN150 PN10/16 B1, 316L flange EN1092-1 (DIN2527 C)
	CWM	DN150 PN10/16, AlloyC22 > 316L flange EN1092-1 (DIN2527)
	AEJ	2" 150lbs RF, 316/316L flange ANSI B16.5
	AFJ	2" 300lbs RF, 316/316L flange ANSI B16.5
	AEM	2" 150lbs, AlloyC22 > 316/316L flange ANSI B16.5

50	**Process Connection:**	
	AFM	2" 300lbs, AlloyC22 > 316/316L flange ANSI B16.5
	ALJ	3" 150lbs RF, 316/316L flange ANSI B16.5
	AMJ	3" 300lbs RF, 316/316L flange ANSI B16.5
	ALM	3" 150lbs, AlloyC22 > 316/316L flange ANSI B16.5
	AMM	3" 300lbs, AlloyC22 > 316/316L flange ANSI B16.5
	APJ	4" 150lbs RF, 316/316L flange ANSI B16.5
	AQJ	4" 300lbs RF, 316/316L flange ANSI B16.5
	APM	4" 150lbs, AlloyC22 > 316/316L flange ANSI B16.5
	AQM	4" 300lbs, AlloyC22 > 316/316L flange ANSI B16.5
	AWJ	6" 150lbs RF, 316/316L flange ANSI B16.5
	AWM	6" 150lbs, AlloyC22 > 316/316L flange ANSI B16.5
	KEJ	10K 50A RF, 316L flange JIS B2220
	KEM	10K 50A, AlloyC22 > 316L flange JIS B2220
	KLJ	10K 80A RF, 316L flange JIS B2220
	KLM	10K 80A, AlloyC22 > 316L flange JIS B2220
	KPJ	10K 100A RF, 316L flange JIS B2220
	KPM	10K 100A, AlloyC22 > 316L flange JIS B2220
	KWJ	10K 150A RF, 316L flange JIS B2220
	KWM	10K 150A, AlloyC22 > 316L flange JIS B2220
	YY9	Special version

60	**Output; Operation:**	
	A	4-20mA SIL HART; 4-line display VU331, envelope curve display on site
	B	4-20mA SIL HART; w/o display, via communication
	K	4-20mA SIL HART; Prepared for FHX40, remote display (accessory)
	C	PROFIBUS PA; 4-line display VU331, envelope curve display on site
	D	PROFIBUS PA; w/o display, via communication
	L	PROFIBUS PA; Prepared for FHX40, remote display (accessory)
	E	FOUNDATION Fieldbus; 4-line display, envelope curve display on site
	F	FOUNDATION Fieldbus; w/o display, via communication
	M	FOUNDATION Fieldbus; Prepared for FHX40, remote display (accessory)
	Y	Special version

70	**Housing:**	
	A	F12 Alu, coated IP65 NEMA4X
	B	F23 316L IP65 NEMA4X
	C	T12 Alu, coated IP65 NEMA4X, separate conn. compartment
	D	T12 Alu, coated IP65 NEMA4X+OVP, separate conn. compartment, OVP=overvoltage protection
	Y	Special version

80	**Cable Entry:**	
	2	Gland M20 (EEx d > thread M20)
	3	Thread G1/2
	4	Thread NPT1/2
	5	Plug M12
	6	Plug 7/8"
	9	Special version

90	**Additional Option:**	
	A	Basic version
	B	EN10204-3.1 material, wetted parts, (316L wetted parts) inspection certificate
	F	Advanced dynamics, max. MB=70m liquids, MB=measuring range
	G	Advanced dynamics, 3.1, NACE, max. MB=70m liquids, MB=measuring range EN10204-3.1 material, NACE MR0175 (316L wetted parts) inspection certificate
	H	5-point linearity protocol, see additional spec.
	J	5-point, 3.1, NACE, 5-point linearity protocol, see additional spec., EN10204-3.1 material, NACE MR0175 (316L wetted parts) inspection certificate
	L	5-point, advanced dynamics, 3.1, NACE, 5-point linearity protocol, see additional spec., Advanced dynamics, max MB=70m liquids, MB=measuring range EN10204-3.1 material, NACE MR0175, (316L wetted parts) inspection certificate
	N	EN10204-3.1 material, NACE MR0175 (316L wetted parts) inspection certificate
	S	GL/ABS/NK marine certificate
	Y	Special version

995	**Marking:**	
	1	Tagging (TAG)
	2	Bus address

FMR240-	Complete product designation

2.2 Scope of delivery

Caution!
It is essential to follow the instructions concerning the unpacking, transport and storage of measuring instruments given in the chapter "Incoming acceptance, transport, storage", → 11!

The scope of delivery consists of:
- Assembled instrument
- Accessories (→ 67)
- Endress+Hauser oprating program on the enclosed CD-ROM
- Brief operating instructions KA1006F/00/EN for quick commissioning
- Brief operating instructions KA235F/00/A2 (basic setup/troubleshooting), housed in the instrument)
- Approval documentation: if this is not included in the operating manual
- CD-ROM with further documentation, e. g.
  - Technical Information
  - Operating Instructions
  - Description of Intrument Functions

2.3 Certificates and approvals

CE mark, declaration of conformity
The device is designed to meet state-of-the-art safety requirements, has been tested and left the factory in a condition in which it is safe to operate. The device complies with the applicable standards and regulations as listed in the EC declaration of conformity and thus complies with the statutory requirements of the EC directives. Endress+Hauser confirms the successful testing of the device by affixing to it the CE mark.

2.4 Registered trademarks

KALREZ®, VITON®, TEFLON®
Registered trademark of the company, E.I. Du Pont de Nemours & Co., Wilmington, USA

TRI-CLAMP®
Registered trademark of the company, Ladish & Co., Inc., Kenosha, USA

HART®
Registered trademark of HART Communication Foundation, Austin, USA

ToF®
Registered trademark of the company Endress+Hauser GmbH+Co. KG, Maulburg, Germany

PulseMaster®
Registered trademark of the company Endress+Hauser GmbH+Co. KG, Maulburg, Germany

PhaseMaster®
Registered trademark of the company Endress+Hauser GmbH+Co. KG, Maulburg, Germany

3 Mounting

3.1 Quick installation guide

Observe orientation when installing!

Installation in tank (free space):
Mark on process connector facing the nearest tank wall!

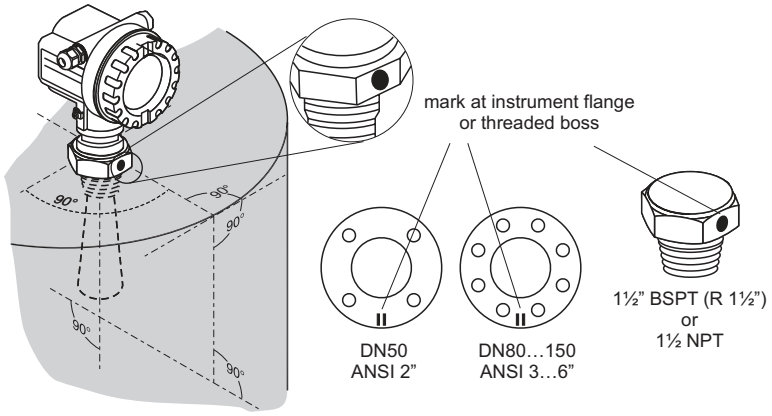

Installation in stilling well:
Mark on process connector pointed towards the slots or vent holes!

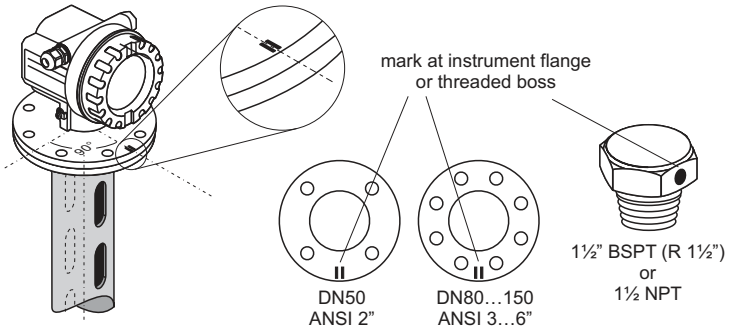

Installation in bypass:
Mark on process connector 90° offset from the tank connections!

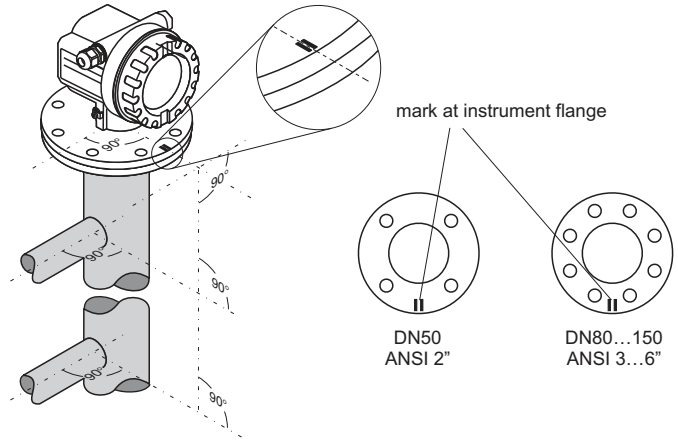

Turn housing

The housing can be turned 350° in order to simplify access to the display and the terminal compartment

F12 / F23 housing

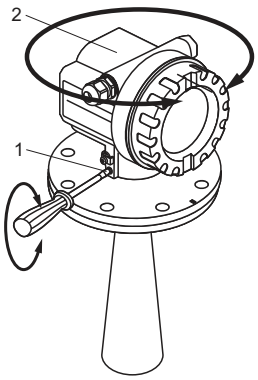

T12 housing

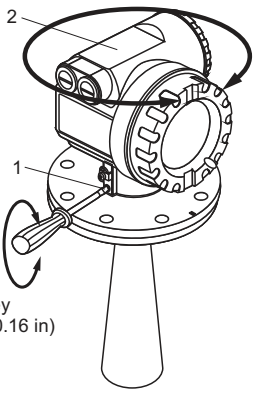

L00-FMR240xx-17-00-00-en-004

3.2 Incoming acceptance, transport, storage

3.2.1 Incoming acceptance

Check the packing and contents for any signs of damage.
Check the shipment, make sure nothing is missing and that the scope of supply matches your order.

3.2.2 Transport



Caution!
Follow the safety instructions and transport conditions for instruments of more than 18 kg (39.69 lbs). Do not lift the measuring instrument by its housing in order to transport it.

3.2.3 Storage

Pack the measuring instrument so that is protected against impacts for storage and transport. The original packing material provides the optimum protection for this.
The permissible storage temperature is -40 °C to +80 °C (-40 °F to +176 °F) or -50 °C to +80 °C (-58 °F to +176 °F).

3.3 Installation conditions

3.3.1 Dimensions

Housing dimensions

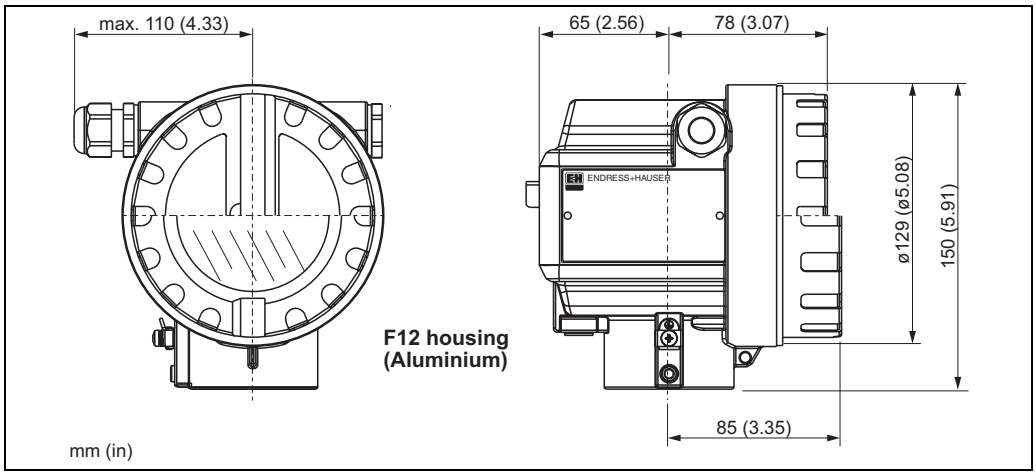

L00-F12xxxx-06-00-00-en-001

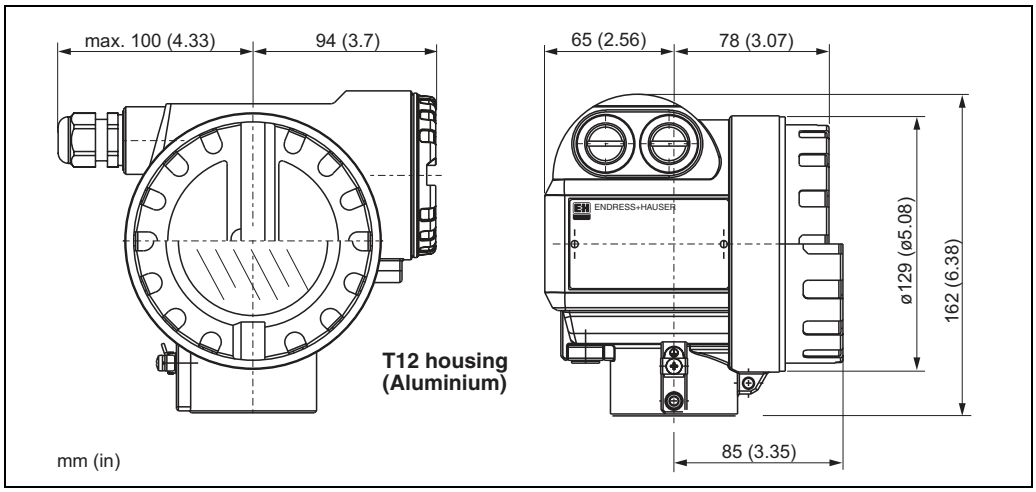

L00-T12xxxx-06-00-00-en-001

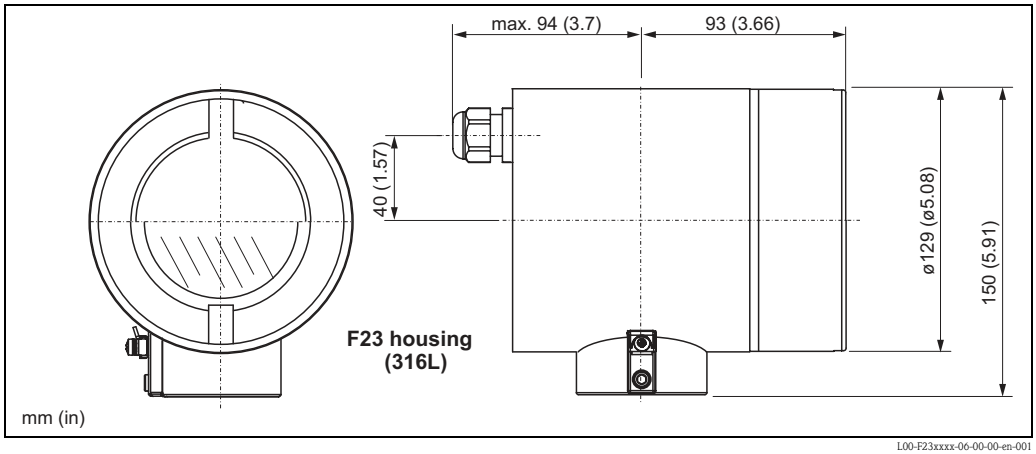

L00-F23xxxx-06-00-00-en-001

Process connection

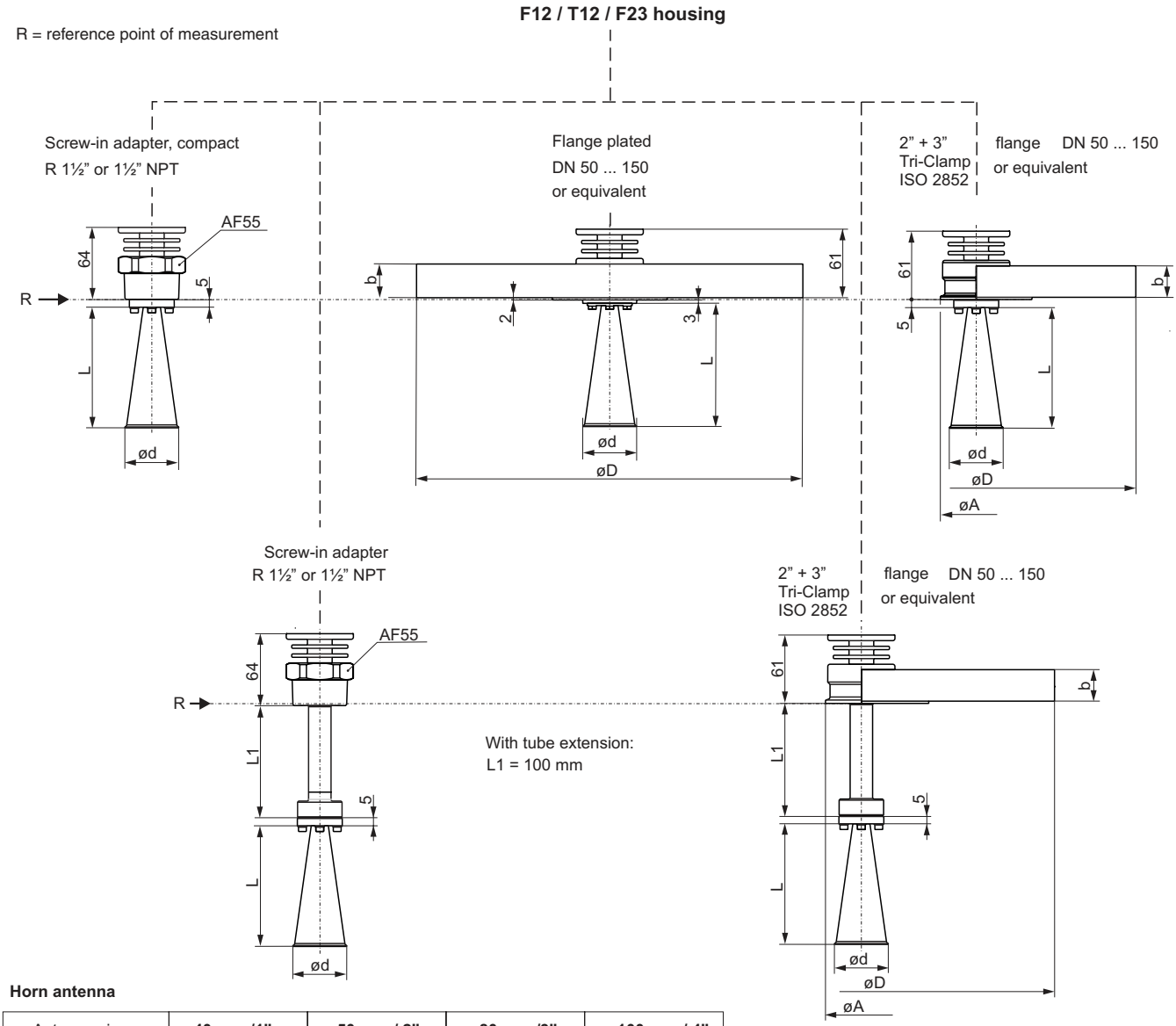

Horn antenna

Antenna size	**40 mm /1"**	**50 mm / 2"**	**80 mm /3"**	**100 mm / 4"**
L [mm]	86	115	211	282
d [mm]	40	48	75	95

Note!
material process connection = material horn antenna, resp. wetted parts of the process connection

Flange to EN 1092-1 (agreeable to DIN 2527)

Flange	**DN 50**	**DN 80**	**DN 100**	**DN 150**
b [mm]	18 (20)	20 (24)	20 (24)	22
D [mm]	165 (165)	200 (200)	220 (235)	285

for PN 16 (for PN 40)

Flange to JIS B2220

Flange	**DN 50**	**DN 80**	**DN 100**	**DN 150**
b [mm]	16	18	18	22
D [mm]	155	185	210	280

for 10K

Flange to ANSI B16.5

Flange	**2"**	**3"**	**4"**	**6"**
b [mm]	19.1 (22.4)	23.9 (28.4)	23.9 (31.8)	25.4
D [mm]	152.4 (165.1)	190.5 (209.5)	228.6 (254)	279.4

for 150 lbs (for 300 lbs)

Tri - Clamp to ISO 2852

Clamp	**2"**	**3"**
A	64	91

L00-FMR240xx-06-00-00-en-006

3.3.2 Engineering hints

Orientation

- Recommended distance (1) wall – **outer edge** of nozzle: ~1/6 of tank diameter. Nevertheless the device should not be installed closer than 15 cm (5.91 in) to the tankwall.
- Not in the centre (3), interference can cause signal loss.
- Not above the fill stream (4).
- It is recommended to use a weather protection cover (2) in order to protect the transmitter from direct sun or rain. Assembly and disassembly is simply done by means of a tension clamp (→ 67, "Accessories").

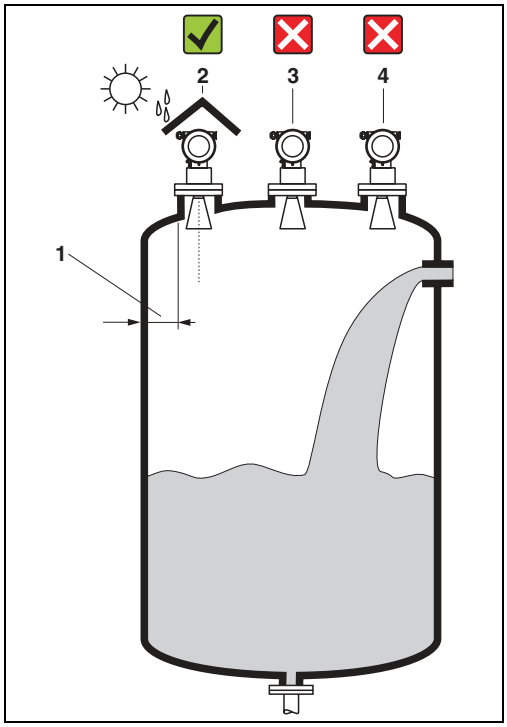

L00-FMR2xxxx-17-00-00-xx-001

Tank installations

- Avoid any installations (1), like limit switches, temperature sensors, etc., inside the signal beam (→ 16, "Beam angle").
- Symmetrical installations (2), i. e. vacuum rings, heating coils, baffles, etc., can also interfere with the measurement.

Optimization options

- Antenna size: the bigger the antenna, the smaller the beam angle, the less interference echoes.
- Mapping: the measurement can be optimized by means of electronic suppression of interference echoes.
- Antenna alignment: Refer to , "Optimum mounting position", → 22
- Stilling well: a stilling well can always be used to avoid interference.
- Metallic screens (3) mounted at a slope spread the radar signals and can, therefore, reduce interference echoes.

Please contact Endress+Hauser for further information.

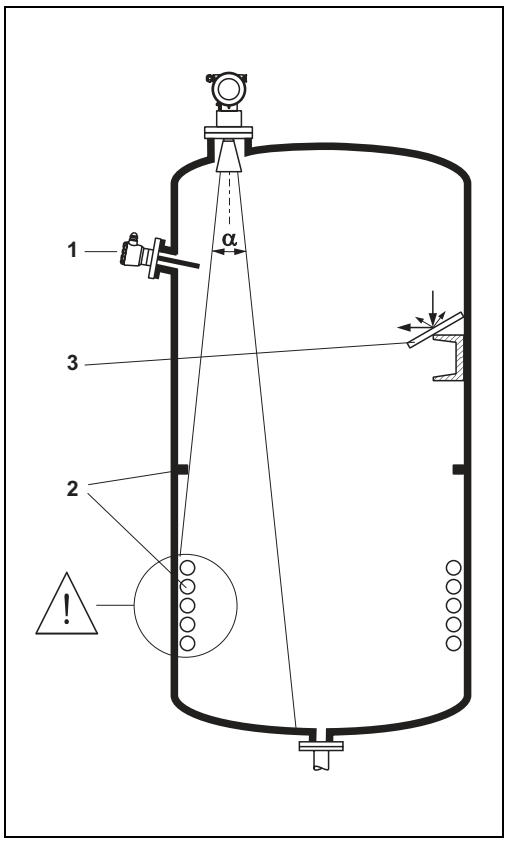

L00-FMR2xxxx-17-00-00-xx-002

Measurement in a plastic tank

If the outer wall of the tank is made of a non-conductive material (e. g. GRP), microwaves can also be reflected off interfering installations outside the signal beam (e. g. metallic pipes (1), ladders (2), grates (3), ...). Therefore, there should be no such interfering installations in the signal beam. Please contact Endress+Hauser for further information.

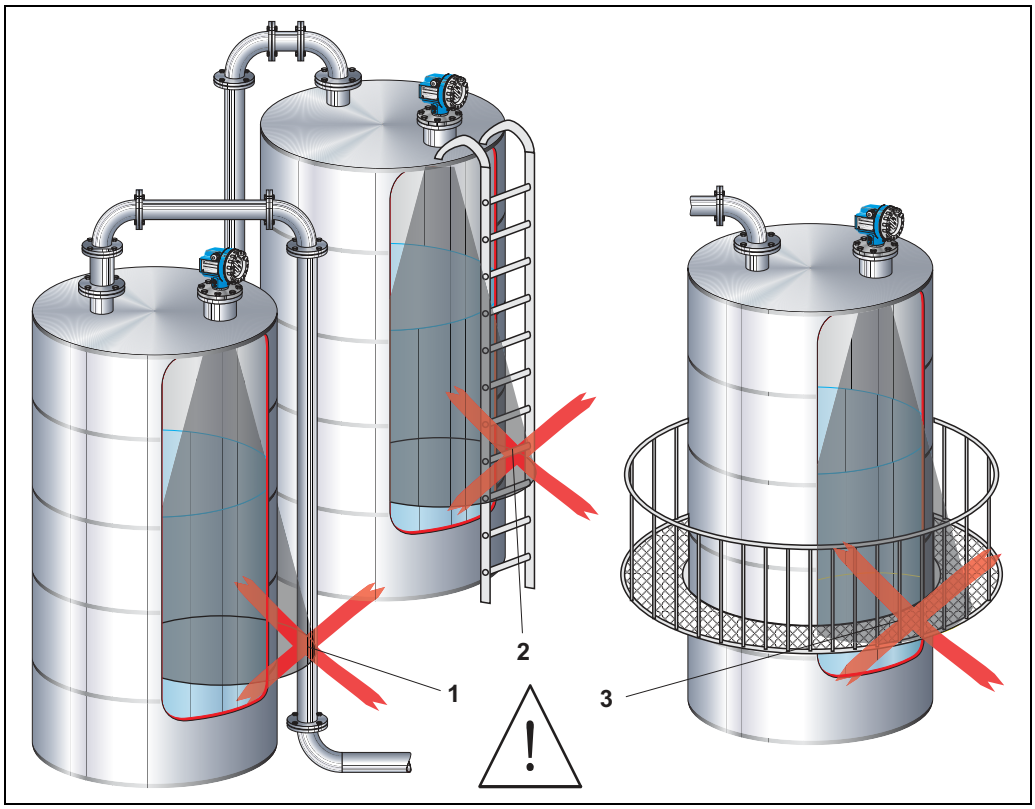

L00-FMR2xxxx-17-00-00-xx-013

Beam angle

The beam angle is defined as the angle a where the energy density of the radar waves reaches half the value of the maximum energy density (3dB-width). Microwaves are also emitted outside the signal beam and can be reflected off interfering installations. Beam diameter **W** as function of antenna type (beam angle **α**) and measuring distance **D**:

Antenna size (horn diameter)	40 mm (1½")	50 mm (2")	80 mm (3")	100 mm (4")
Beam angle α	23°	18°	10°	8°
Measuring distance (D)	**Beam diameter (W)**			
	40 mm (1½")	50 mm (2")	80 mm (3")	100 mm (4")
3 m (9.8 ft)	1,22 m (4 ft)	0,95 m (3.1 ft)	0,53 m (1.7 ft)	0,42 m (1.4 ft)
6 m (20 ft)	2,44 m (8 ft)	1,90 m (6.2 ft)	1,05 m (3.4 ft)	0,84 m (2.8 ft)
9 m (30 ft)	3,66 m (12 ft)	2,85 m (9.4 ft)	1,58 m (5.2 ft)	1,26 m (4.1 ft)
12 m (39 ft)	4,88 m (16 ft)	3,80 m (12.0 ft)	2,10 m (6.9 ft)	1,68 m (5.5 ft)
15 m (49 ft)	6,10 m (20 ft)	4,75 m (16 ft)	2,63 m (8.63 ft)	2,10 m (6.9 ft)
20 m (66 ft)	8,14 m (27 ft)	6,34 m (21 ft)	3,50 m (11 ft)	2,80 m (9.2 ft)
25 m (82 ft)	10,17 m (33 ft)	7,92 m (26 ft)	4,37 m (14 ft)	3,50 m (11 ft)
30 m (98 ft)	—	9,50 m (31 ft)	5,25 m (17 ft)	4,20 m (14 ft)
35 m (115 ft)	—	11,09 m (36 ft)	6,12 m (20 ft)	4,89 m (16 ft)
40 m (131 ft)	—	12,67 m (42 ft)	7,00 m (23 ft)	5,59 m (18 ft)
45 m (148 ft)	—	—	7,87 m (26 ft)	6,29 m (21 ft)
60 m (197 ft)	—	—	10,50 m (34 ft)	8,39 m (28 ft)
70 m (230 ft)	—	—	—	9,79 m (32 ft)

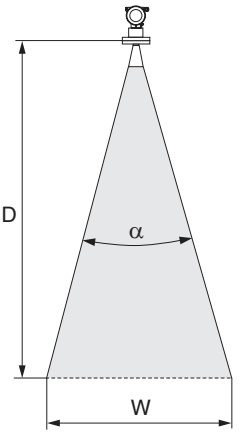

Measuring conditions in liquids

Note!

- In case of **boiling surfaces, bubbling** or tendency for **foaming,** use FMR230 or FMR231. Depending on its consistence, foam can either absorb microwaves or reflect them off the foam surface. Measurement is possible under certain conditions.
- In case of heavy **steam development** or **condensate** the max. measuring range of FMR240 may decrease depending on density, temperature and composition of the steam → use FMR230 or FMR231.
- For the measurement of absorbing gases such as **ammonia NH_3** or some **fluorocarbons** [1], please use FMR230 in a stilling well.

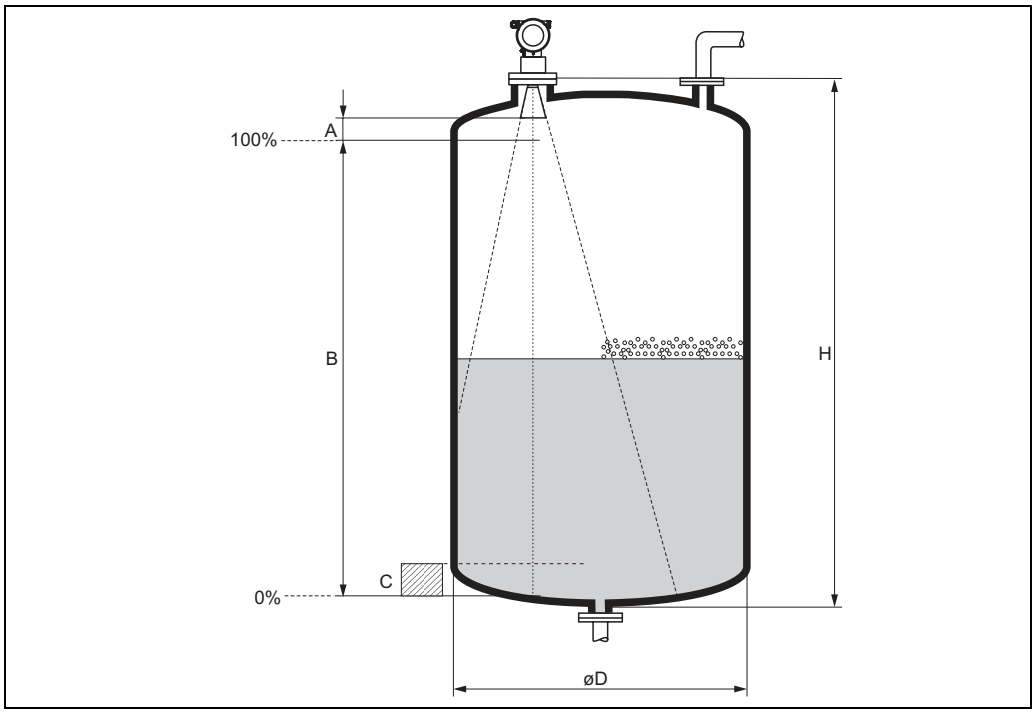

- The measuring range begins, where the beam hits the tank bottom. Particularly with dish bottoms or conical outlets the level cannot be detected below this point.
- In case of media with a low dielectric constant (groups A and B), the tank bottom can be visible through the medium at low levels (low height **C**). Reduced accuracy has to be expected in this range. If this is not acceptable, we recommend positioning the zero point at a distance **C** (see Fig.) above the tank bottom in these applications.
- In principle it is possible to measure up to the tip of the antenna with FMR230/231/240. However, due to considerations regarding corrosion and build-up, the end of the measuring range should not be chosen any closer than **A** (see Fig.) to the tip of the antenna.
  For FMR244/245, the end of measuring range should not be chosen closer than **A** (see Fig.) to the tip of the antenna, especially if there is development of condensate.
- The smallest possible measuring range **B** depends on the antenna version (see Fig.).
- The tank diameter should be greater than **D** (see Fig.), the tank height at least **H** (see Fig.).

A [mm (in)]	B [m (ft)]	C [mm (in)]	D [m (ft)]	H [m (ft)]
50 (1.97)	> 0,2 (> 0.7)	50 to 250 (1.97 to 9.84)	> 0,2 (> 0.7)	> 0,3 (> 1.0)

1) Affected compounds are e. g. R134a, R227, Dymel 152a.

Measuring conditions in solids

- The measuring range begins, where the beam hits the bottom. Particularly with conical outlets the level cannot be detected below this point.
  The maximum measuring range can be increased in such applications by using a top target positioner (see accessories).
- In case of media with a low dielectric constant (groups A and B), the bottom can be visible through the medium at low levels. In order to guarantee the required accuracy in these cases, it is recommended to position the zero-point at a distance **C** above the bottom (see Fig.).
- In principle it is possible to measure up to the tip of the antenna with the Micropilot M. However, due to considerations regarding abrasion and build-up and depending on the orientation of the product surface (angel of repose), the end of the measuring range should be at a distance of approx. **A** (see Fig). If required, and if some conditions (high DC value, flat angle of repose) are met, shorter distances can be achieved.

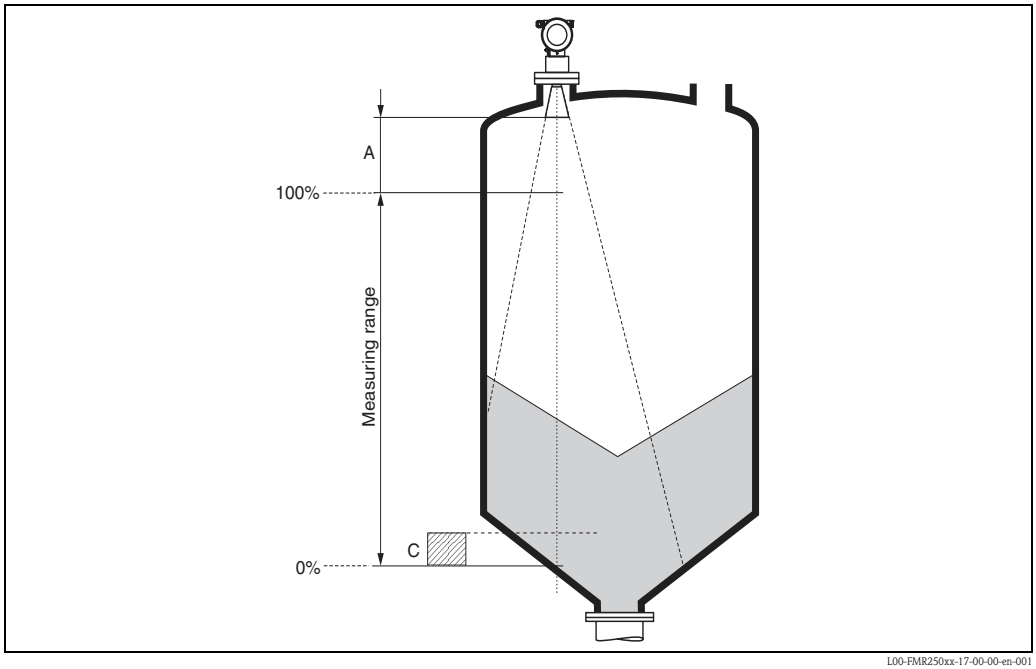

L00-FMR250xx-17-00-00-en-001

A [mm (in)]	C [mm (in)]
approx. 400 (15.7)	50 to 150 (1.97 to 5.91)

Measuring range in liquids

The usable measuring range depends on the size of the antenna, the reflectivity of the medium, the mounting location and eventual interference reflections.

The maximum configurable range is:
- 40 m (131 ft) for basic version
- 70 m (230 ft) with additional option F (G), → 📄 7, "ordering information"

The following tables describe the groups of media as well as the achievable measuring range as a function of application and media group. If the dielectric constant of a medium is unknown, it is recommended to assume media group B to ensure a reliable measurement.

Media group	DC (εr)	Examples
A	1.4 to 1.9	non-conducting liquids, e. g. liquefied gas[1)]
B	1.9 to 4	non-conducting liquids, e. g. benzene, oil, toluene, …
C	4 to 10	e. g. concentrated acids, organic solvents, esters, aniline, alcohol, acetone, …
D	> 10	conducting liquids, e. g. aqueous solutions, dilute acids and alkalis

1) Treat Ammonia NH_3 as a medium of group A, i. e. use FMR230 in a stilling well.

Measuring range in solids

The FMR244 with 80 mm (3") antenna or FMR240 with 100 mm (4") horn antenna and additional option F (= advanced dynamics) is also suited for solid applications. The usable measuring range depends on the reflection properties of the medium, the mounting position and interference reflections which may be present. The maximum configurable measuring range for the Micropilot M FMR240 with 100 mm (4") horn antenna and additional option F (= advanced dynamics) is 30 m (98 ft) in solid applications. It is recommended to use the variable flange seal for alignment (see Technical Information TI345F/00/EN).

Reduction of the max. possible measuring range through:
- Media with poor reflection properties (= small DC). For examples refer to table below.
- Angle of repose.
- Extremely loose surfaces of bulk solids, e. g. bulk solids with low bulk weight for pneumatic filling.
- Build-up, above all of moist products.

The following table describes the media groups and the dielectric constant εr.

Media group	DC (εr)	Examples	Signal attenuation
A	1.6 to 1.9	– Plastic granulate – White lime, special cement – Sugar	19 to 16 dB
B	1.9 to 2.5	– Portland cement, plaster	16 to 13 dB
C	2.5 to 4	– Grain, seeds – Ground stones – Sand	13 to 10 dB
D	4 to 7	– Naturally moist (ground) stones, ores – Salt	10 to 7 dB
E	> 7	– Metallic powder – Carbon black – Coal	< 7 dB

The respective lower group applies for very loose or loosened bulk solids.

Measuring range depending on vessel type, conditions and product

Standard: max. measuring range = 40 m (131 ft)	With additional option F (G): max. measuring range = 70 m (230 ft) min. measuring range = 5 m (16 ft)
The recommended measuring range with 100 mm (4") horn antenna in solids is 30 m (98 ft).	

Storage tank

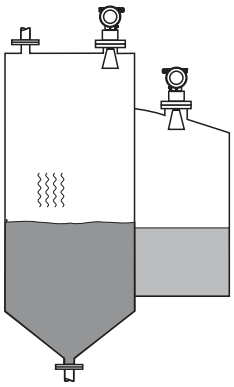

Calm product surface (e. g. intermittent filling, filling from bottom, immersion tubes).

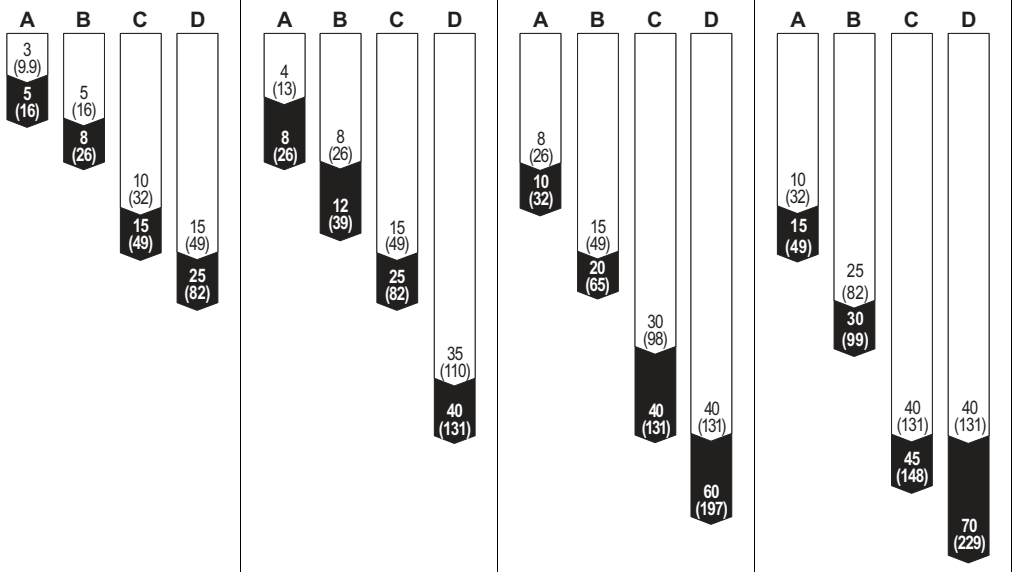

Measuring range [m (ft)]

Buffer tank

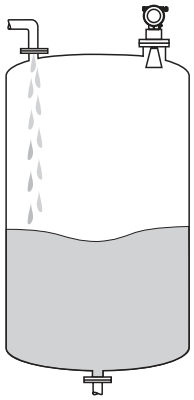

Moving surfaces (e. g. continuous filling, from above, mixing jets).

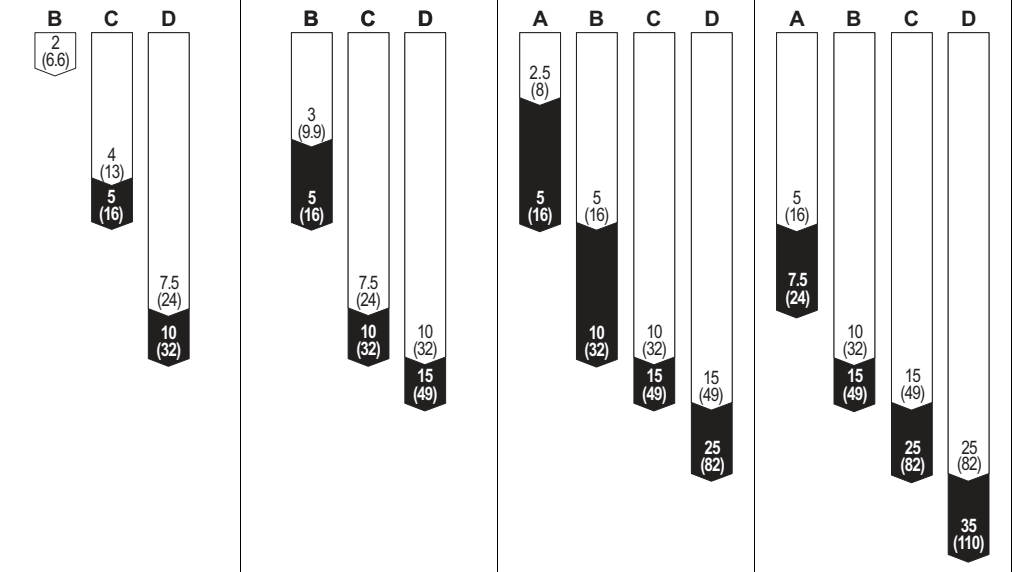

Measuring range [m (ft)]

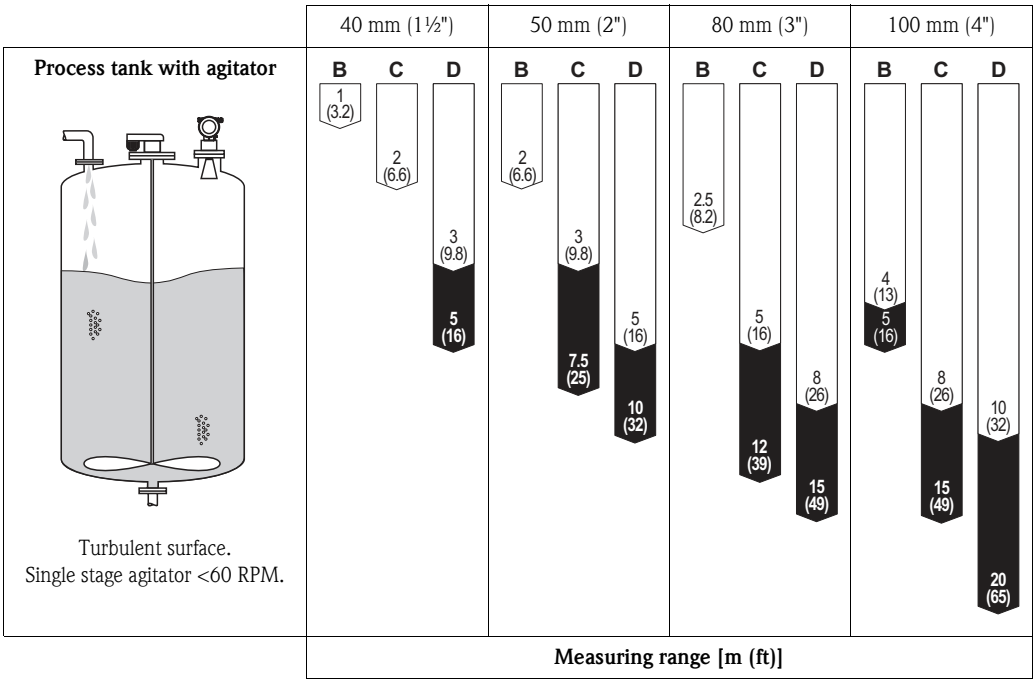

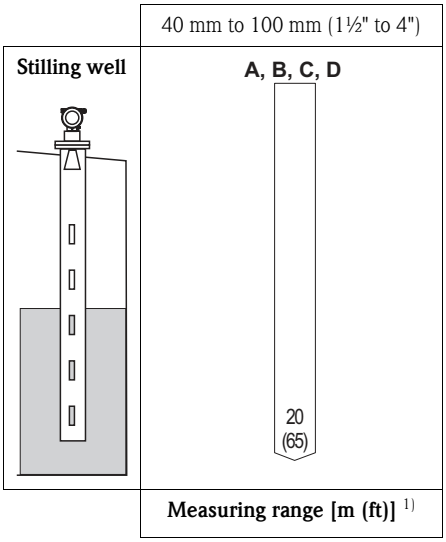

1) Larger measuring range on request

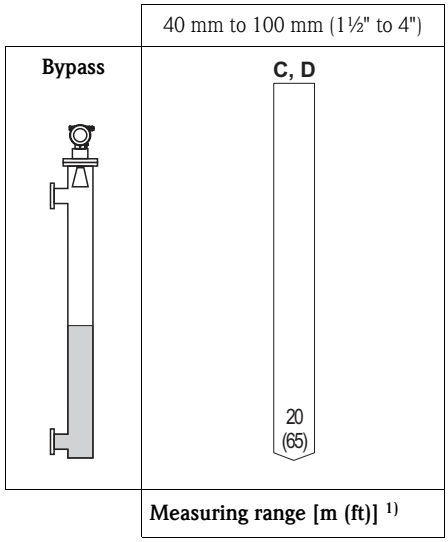

1) For media group A and B to use a Levelflex M with koax probe

3.4 Installation instructions

3.4.1 Mounting kit

In addition to the tool needed for flange mounting, you will require the following tool:
- A key AF60 for threaded boss
- 4 mm (0.16 in) Allen wrench for turning the housing.

3.4.2 Installation in tank (free space)

Optimum mounting position

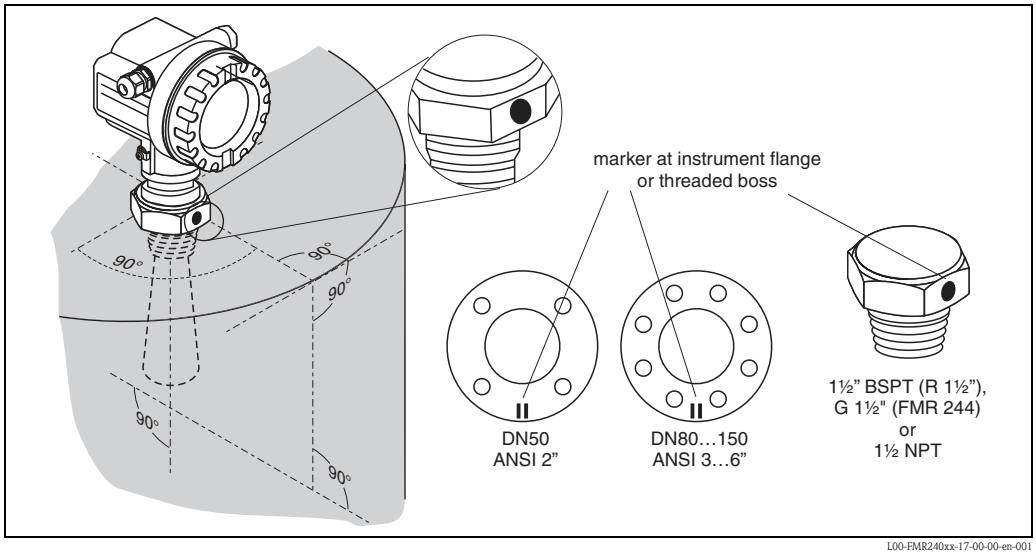

L00-FMR240xx-17-00-00-en-001

Standard installation

When mounting in a tank, please observe engineering hints (→ 14) and the following points:
- Marker is aligned towards tank wall.
- The marker is always exactly in the middle between two bolt-holes in the flange.
- After mounting, the housing can be turned 350° in order to simplify access to the display and the terminal compartment.
- For optimum measurement, the horn antenna should extend below the nozzle. Select version with 100 mm (4") antenna extension if necessary, → 12. Nozzle heights up to 500 mm (19.7 in) can be accepted if this should not be possible due to mechanical reasons.

  Note!
  Please contact Endress+Hauser for application with higher nozzle.

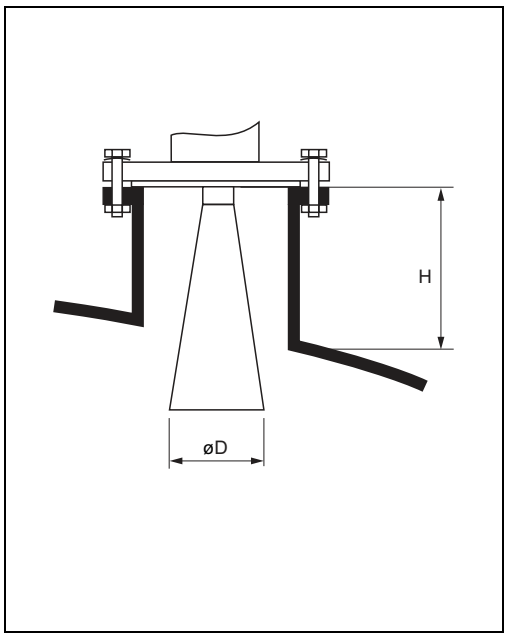

L00-FMR240xx-17-00-00-de-002

- **The horn antenna must be aligned vertically.**

  Caution!
  At not vertically aligned horn antenna can be reduced the maximum range.

- For mounting in solid applications use the variable flange seal to align the device towards the product surface (see Technical Information TI345F/00/EN).

Antenna size	40 mm (1½")	50 mm (2")	80 mm (3")	100 mm (4")
D [mm (in)]	40 (1.57)	48 (1.89)	75 (2.95)	95 (3.74)
H [mm (in)]	< 85 (< 3.35)	< 115 (< 4.53)	< 210 (< 8.27)	< 280 (< 11)

Measurement from the outside through plastic walls

- Observe engineering hints, → 14.
- If possible, use an antenna 100 mm (4").

Penetrated material	PE	PTFE	PP	Perspex
DK / εr	2.3	2.1	2.3	3.1
Optimum thickness [mm (in)][1)]	3.8 (0.15)	4.0 (0.16)	3.8 (0.15)	3.3 (0.13)

1) Other possible values for the thickness are multiples of the values listed (i. e. PE: 7.6 mm (0.3 in), 11.4 mm (0.45 in), ...)

3.4.3 Installation in stilling well

Optimum mounting position

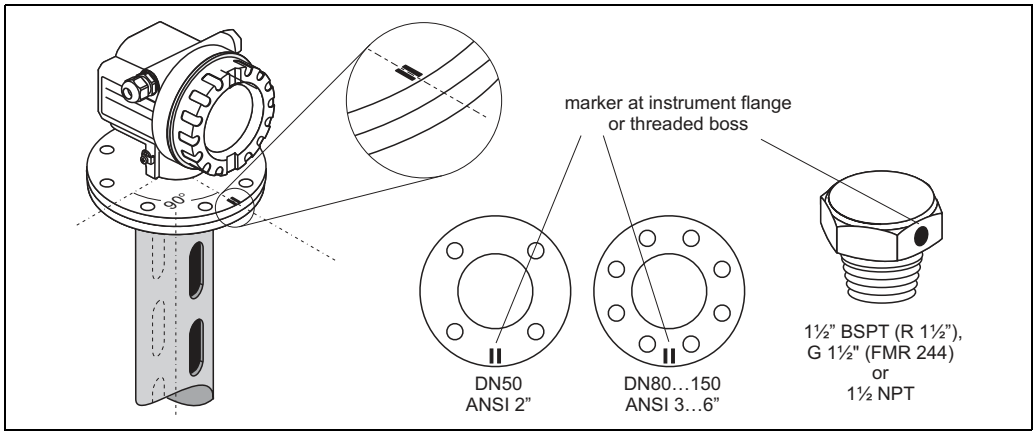

Standard installation

For installations in a stilling well, follow the engineering hints (→ 14) and note the following points:
- Marker is aligned toward slots.
- The marker is always exactly in the middle between two bolt-holes in the flange.
- After mounting, the housing can be turned 350° in order to simplify access to the display and the terminal compartment.
- Measurements can be performed through an open full bore ball valve without any problems.

Recommendations for the stilling well

At the construction of a stilling well, please note the following points:
- Metal (no enamel coating, plastic coating on request).
- Constant diameter.
- Weld seam as smooth as possible and on the same axis as the slots.
- Slots offset 180° (not 90°).
- Slot width respectively diameter of holes max. 1/10 of pipe diameter, de-burred. Length and number do not have any influence on the measurement.
- Select horn antenna as big as possible. For intermediate sizes (i. e. 180 mm (7")) select next larger antenna and adapt it mechanically.
- At any transition (i. e. when using a ball valve or mending pipe segments), no gap may be created exceeding 1 mm (0.04 in).
- The stilling well must be smooth on the inside (average roughness Rz ≤ 6.3 µm (≤ 248 µin)). Use extruded or parallel welded stainless steel pipe. An extension of the pipe is possible with welded flanges or pipe sleeves. Flange and pipe have to be properly aligned at the inside.
- Do not weld through the pipe wall. The inside of the stilling well must remain smooth. In case of unintentional welding through the pipe, the weld seam and any unevenness on the inside need to be carefully removed and smoothened. Otherwise, strong interference echoes will be generated and material build-up will be promoted.
- Particularly on smaller nominal widths it needs to be observed that flanges are welded to the pipe such that they allow for a correct orientation (marker aligned toward slots).

Examples for the construction of stilling wells

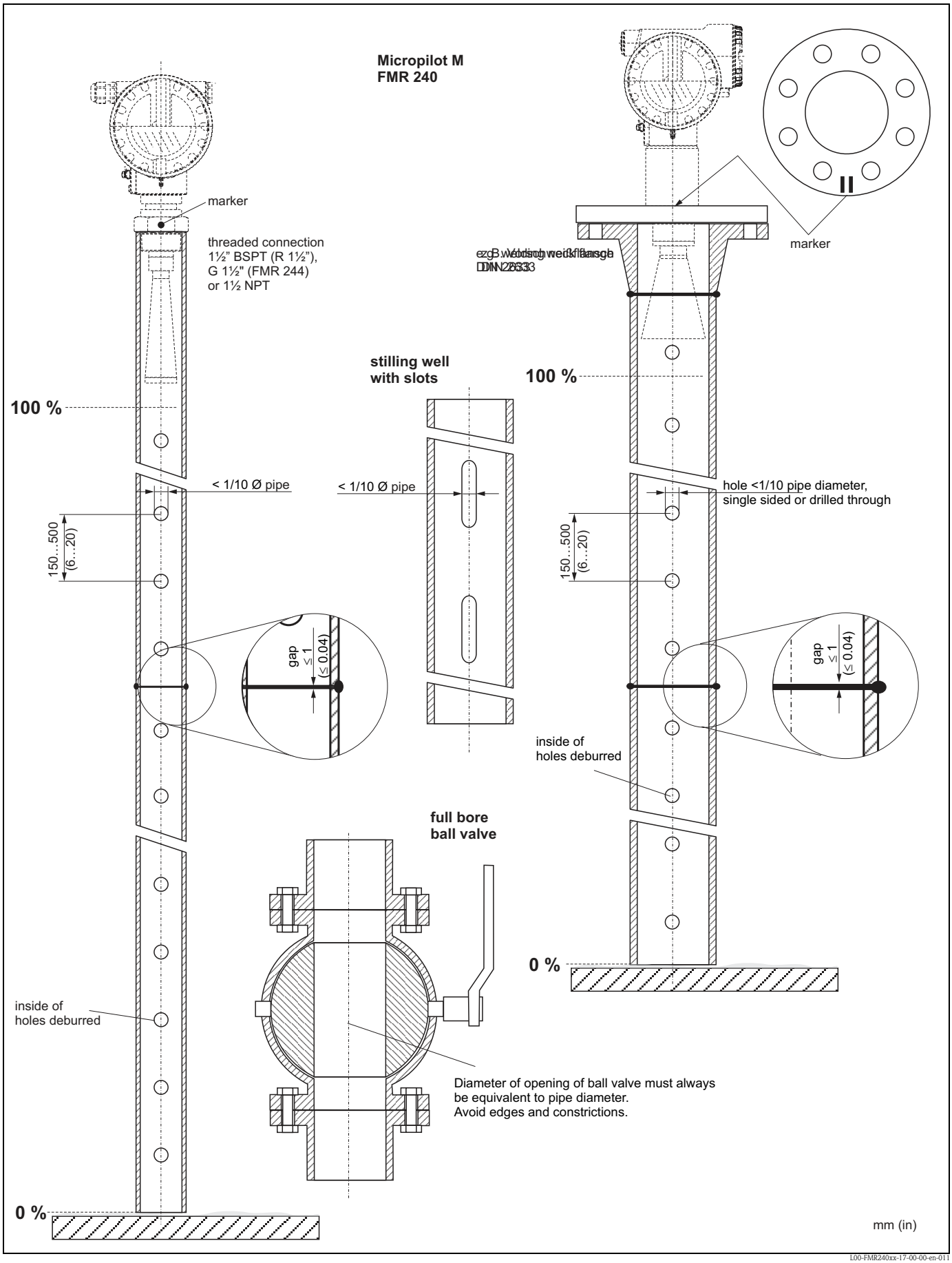

L00-FMR240xx-17-00-00-en-011

3.4.4 Installation in bypass

Optimum mounting position

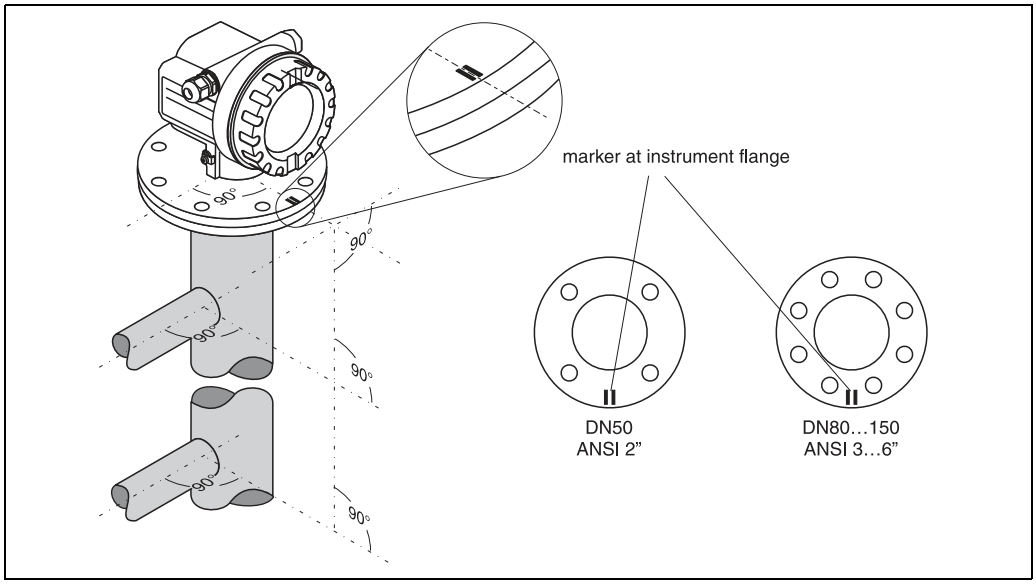

L00-FMR230xx-17-00-00-en-007

Standard installation

For installations in a bypass, follow the engineering hints (→ 14) and note the following points:
- Marker is aligned perpendicular (90°) to tank connectors.
- The marker is always exactly in the middle between two bolt-holes in the flange.
- After mounting, the housing can be turned 350° in order to simplify access to the display and the terminal compartment.
- The horn must be aligned vertically.
- Measurements can be performed through an open full bore ball valve without any problems.

Recommendations for the bypass pipe
- Metal (no plastic or enamel coating).
- Constant diameter.
- Select horn antenna as big as possible. For intermediate sizes (i. e. 95 mm (3.5")) select next larger antenna and adapt it mechanically (FMR230 / FMR240 only).
- At any transition (i. e. when using a ball valve or mending pipe segments), no gap may be created exceeding 1 mm (0.04 in).
- In the area of the tank connections (~ ±20 cm (±7.87 in)) a reduced accuracy of the measurement has to be expected.

Example for the construction of a bypass

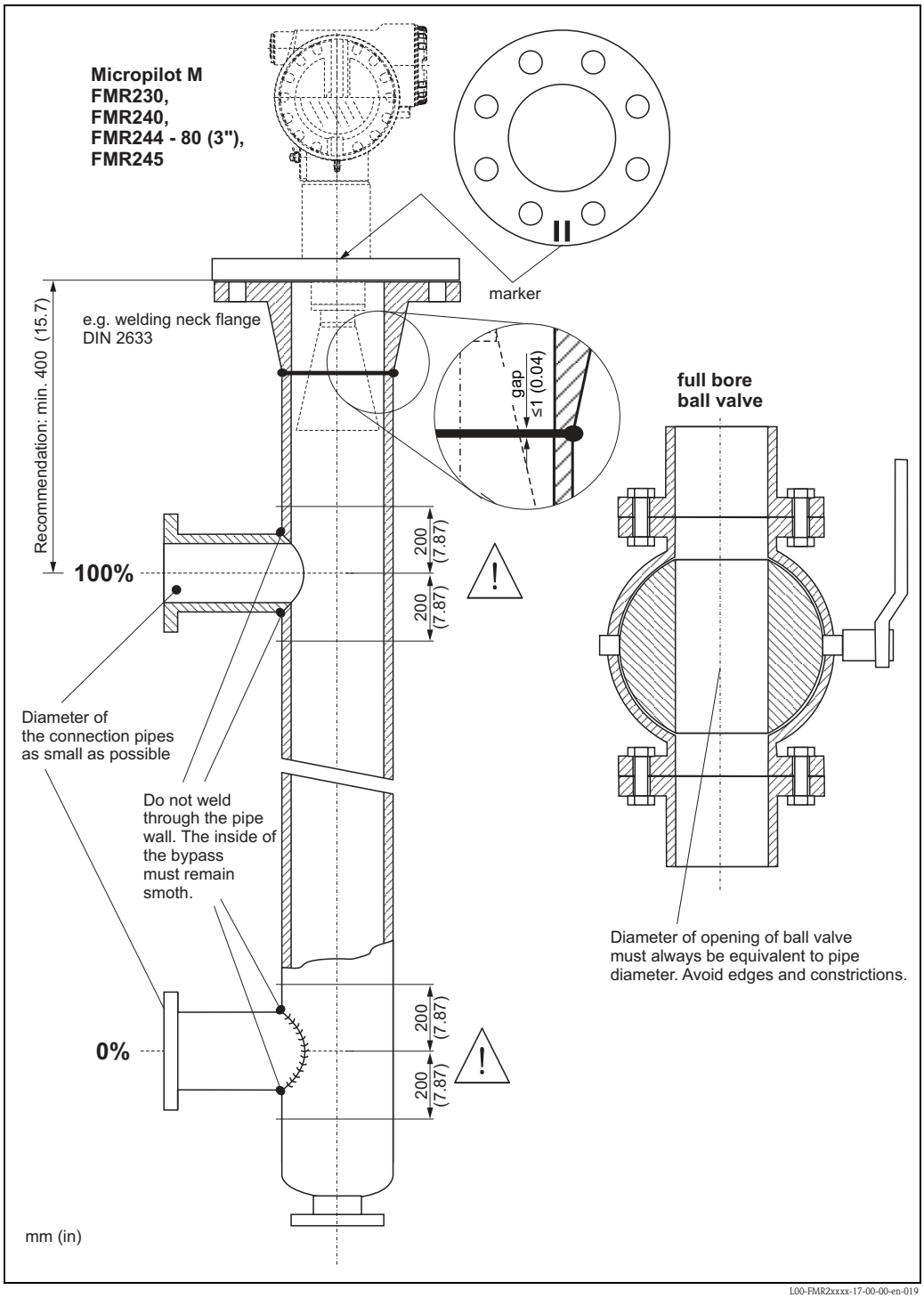

3.4.5 Turn housing

After mounting, the housing can be turned 350° in order to simplify access to the display and the terminal compartment. Proceed as follows to turn the housing to the required position:
- Undo the fixing screws (1)
- Turn the housing (2) in the required direction
- Tighten up the fixing screws (1)

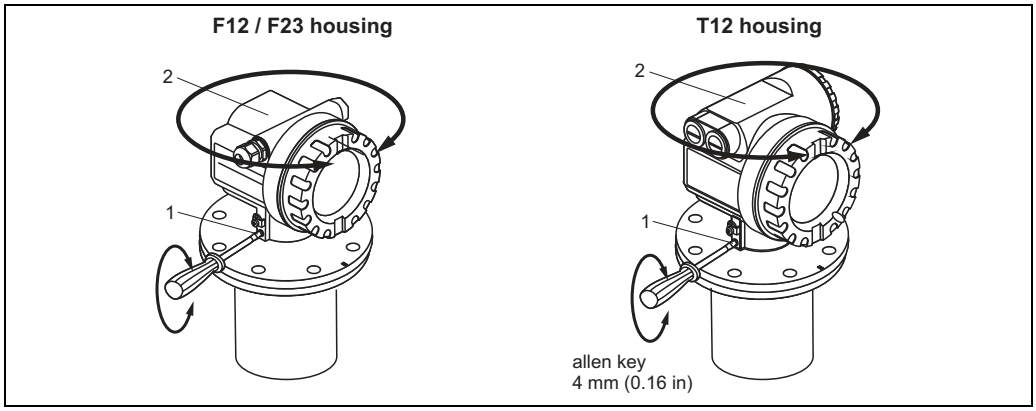

3.5 Post-installation check

After the measuring instrument has been installed, perform the following checks:
- Is the measuring instrument damaged (visual check)?
- Does the measuring instrument correspond to the measuring point specifications such as process temperature/pressure, ambient temperature, measuring range, etc.?
- Is the flange marking correctly aligned (→ 🖹 10)?
- Have the flange screws been tightened up with the respective tightening torque?
- Are the measuring point number and labeling correct (visual check)?
- Is the measuring instrument adequately protected against rain and direct sunlight (→ 🖹 67)?

4 Wiring

4.1 Quick wiring guide

Wiring in F12/F23 housing

Caution!

Before connection please note the following:

- The power supply must be identical to the data on the nameplate (1).
- Switch off power supply before connecting up the device.
- Connect Equipotential bonding to transmitter ground terminal before connecting up the device.
- Tighten the locking screw:
  It forms the connection between the antenna and the housing ground potential.

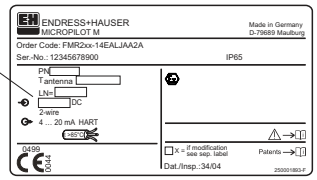

When you use the measuring system in hazardous areas, make sure you comply with national standards and the specifications in the safety instructions (XA's).
Make sure you use the specific cable gland.

EX

On devices supplied with a certificate, the explosion protection is designed as follows:

- Housing F12/F23 - Ex ia:
  Power supply must be intrinsically safe.
- The electronics and the current output are galvanically separated from the antenna circuit.

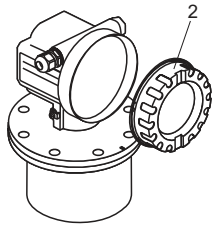

Connect up the Micropilot M as follows:

- Unscrew housing cover (2).
- Remove any display (3) if fitted.
- Remove cover plate from terminal compartment (4).
- Pull out terminal module slightly using pulling loop.
- Insert cable (5) through gland (6).
  A standard installation cable is sufficient if only the analogue signal is used. Use a screened cable when working with a superimposed communications signal (HART).

Unplug display connector!

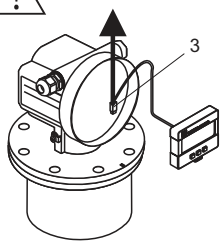

EX

Only ground screening of the line (7) on sensor side.

- Make connection (see pin assignment).
- Re-insert terminal module.
- Tighten cable gland (6).
- Tighten screws on cover plate (4).
- Insert display if fitted.
- Screw on housing cover (2).
- Switch on power supply.

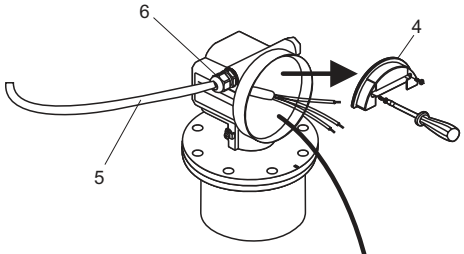

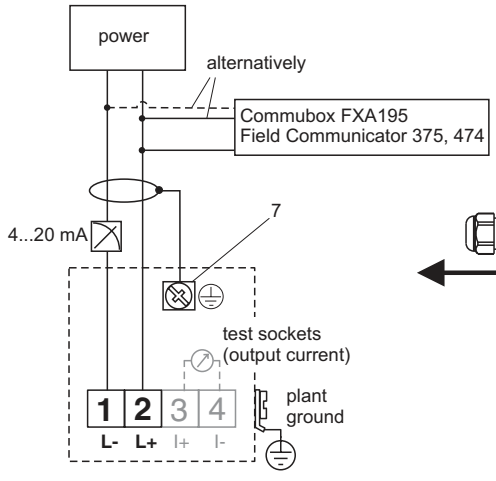

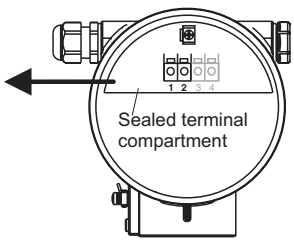

L00-FMR2xxxx-04-00-00-en-013

Wiring in T12 housing

Before connection please note the following:

Caution!

- The power supply must be identical to the data on the nameplate (1).
- Switch off power supply before connecting up the device.
- Connect Equipotential bonding to transmitter ground terminal before connecting up the device.
- Tighten the locking screw:
  It forms the connection between the antenna and the housing ground potential.

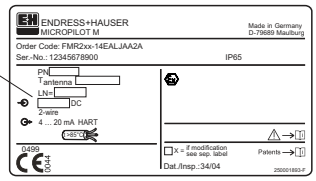

When you use the measuring system in hazardous areas, make sure you comply with national standards and the specifications in the safety instructions (XA's).
Make sure you use the specific cable gland.

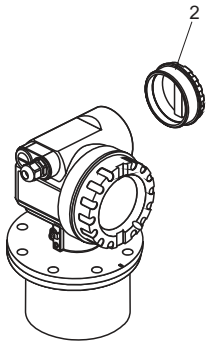

Connect up the Micropilot M as follows:
Before unscrew housing cover (2) at sperate connection room turn off the power supply!

- Insert cable (3) through gland (4).
  A standard installation cable is sufficient if only the analogue signal is used. Use a screened cable when working with a superimposed communications signal (HART).

Only ground screening of the line (5) on sensor side.

- Make connection (see pin assignment).
- Tighten cable gland (4).
- Screw on housing cover (2).
- Switch on power supply.

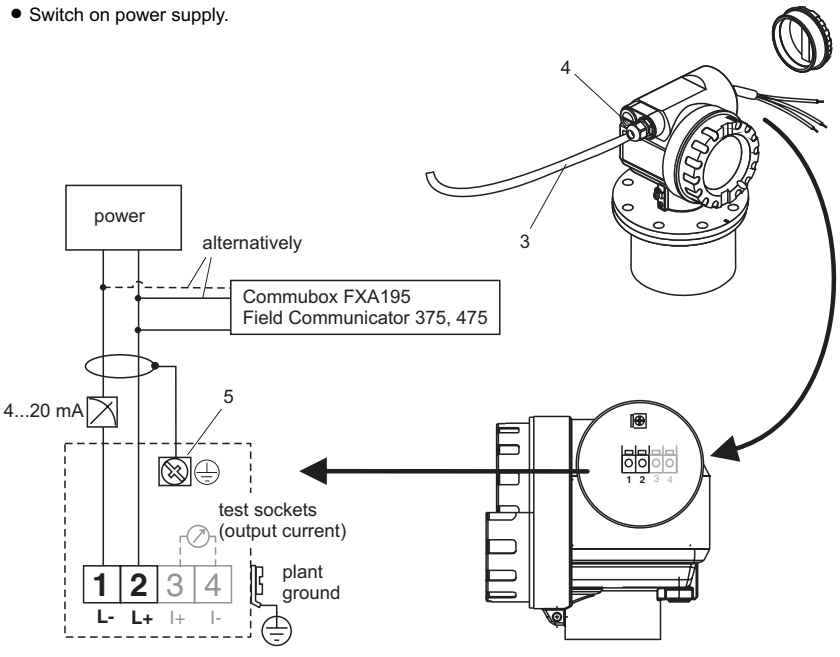

L00-FMR2xxxx-04-00-00-en-014

4.2 Connecting the measuring unit

Terminal compartment

Three housings are available:
- Aluminium housing F12 with additionally sealed terminal compartment for:
  – standard,
  – Ex ia.
- Aluminium housing T12 with separate terminal compartment for:
  – standard,
  – Ex e,
  – Ex d,
  – Ex ia (with overvoltage protection).
- 316L housing F23 for:
  – standard,
  – Ex ia.

The electronics and current output are galvanically isolated from the antenna circuit.

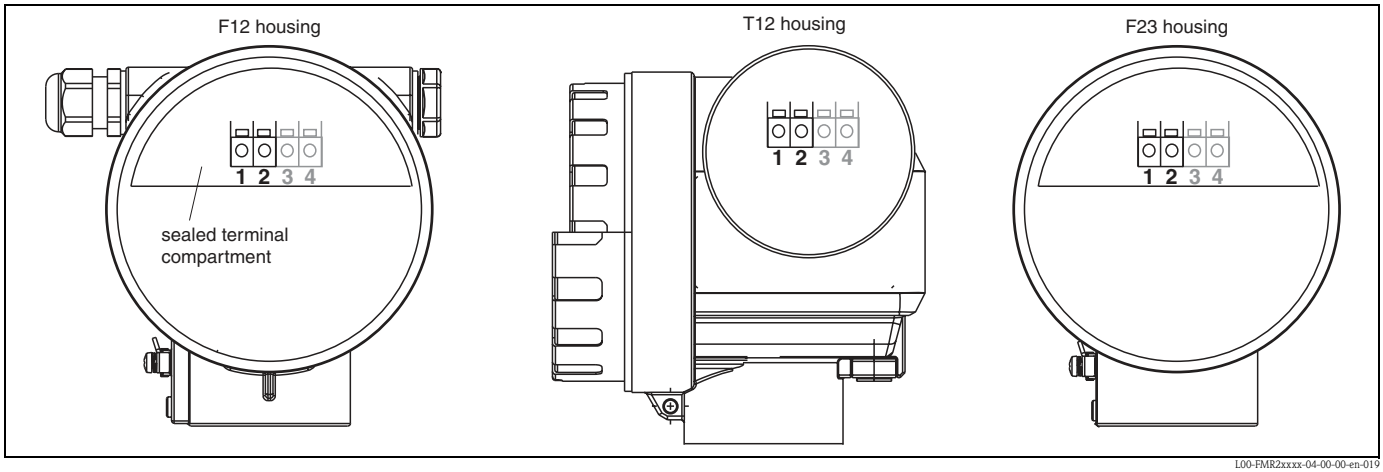

The instrument data are given on the nameplate together with important information regarding the analog output and voltage supply. Housing orientation regarding the wiring, → 28.

Load HART

Minimum load for Hart communication: 250 Ω

Cable entry

Cable gland: M20x1.5 (for Ex d: cable entry)
Cable entry: G½ or ½NPT

Supply voltage

The following values are the voltages across the terminals directly at the instrument:

Communication		Current consumption	Terminal voltage	
			minimal	maximal
HART	standard	4 mA	16 V	36 V
		20 mA	7.5 V	36 V
	Ex ia	4 mA	16 V	30 V
		20 mA	7.5 V	30 V
	Ex em Ex d	4 mA	16 V	30 V
		20 mA	11 V	30 V
	dust Ex	4 mA	16 V	30 V
		20 mA	11 V	30 V
Fixed current, adjustable e. g. for solar power operation (measured value transferred at HART)	standard	11 mA	10 V [1)]	36 V
	Ex ia	11 mA	10 V [1)]	30 V
Fixed current for HART Multidrop mode	standard	4 mA [2)]	16 V	36 V
	Ex ia	4 mA [2)]	16 V	30 V

1) Short-term min. start-up voltage: 11.4 V

2) Start up current 11 mA.

Power consumption

min. 60 mW, max. 900 mW

Current consumption

- Device basic current : 3.6 to 22 mA, for HART-Multidrop: start up current is 11 mA
- Breakdown signal (NAMUR NE43): adjustable

Overvoltage protector

The level transmitter Micropilot M with T12-housing (housing version "D", see Ordering information, → 🖹 7) is equipped with an internal overvoltage protector (600 V surge arrester) according to DIN EN 60079-14 or IEC 60060-1 (impulse current test 8/20 µs, $\hat{I}$ = 10 kA, 10 pulses). Connect the metallic housing of the Micropilot M to the tank wall or screen directly with an electrically conductive lead to ensure reliable potential matching.

4.2.1 HART connection with Endress+Hauser RMA422 / RN221N

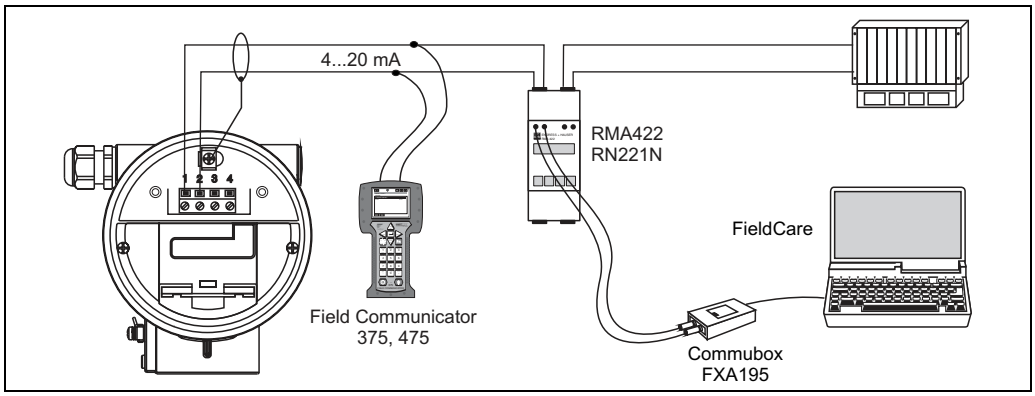

4.2.2 HART connection with other supplies

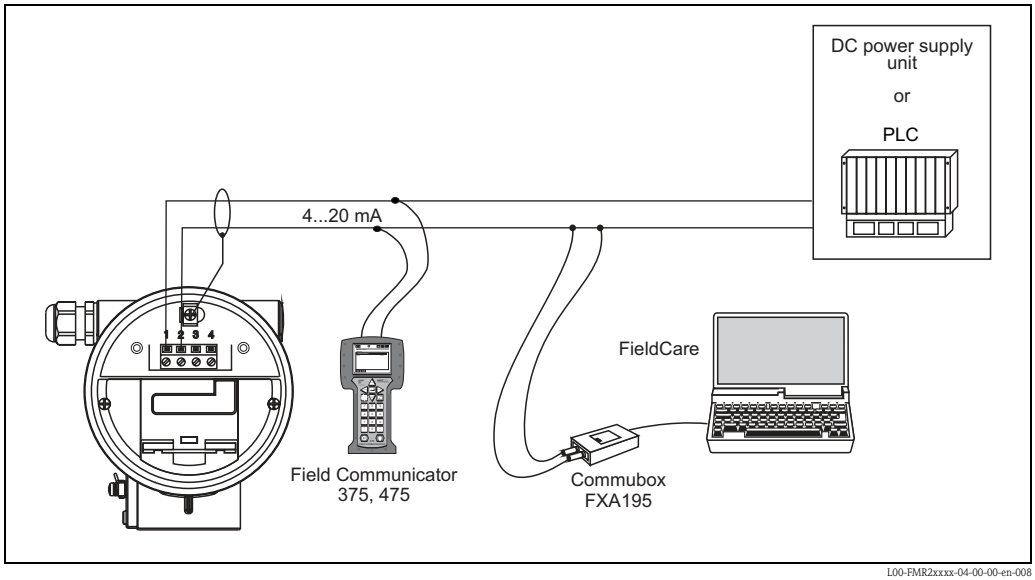

Caution!
If the HART communication resistor is not built into the supply unit, it is necessary to insert a communication resistor of 250 Ω into the 2-wire line.

4.3 Recommended connection

4.3.1 Equipotential bonding

Connect the equipotential bonding to the external ground terminal of the transmitter.

4.3.2 Wiring screened cable

Caution!
In Ex applications, the screen must only be grounded on the sensor side. Further safety instructions are given in the separate documentation for applications in explosion hazardous areas.

4.4 Degree of protection

- with closed housing: IP65, NEMA4X (higher degree of protection e. g. IP68 on request)
- with open housing: IP20, NEMA1 (also ingress protection of the display)
- antenna: IP68 (NEMA6P)

4.5 Post-connection check

After wiring the measuring instrument, perform the following checks:
- Is the terminal allocation correct (→ 29 and → 30)?
- Is the cable gland tight?
- Is the housing cover screwed tight?
- If auxiliary power is available:
  Is the instrument ready for operation and does the liquid crystal display show any value?

5 Operation

5.1 Quick operation guide

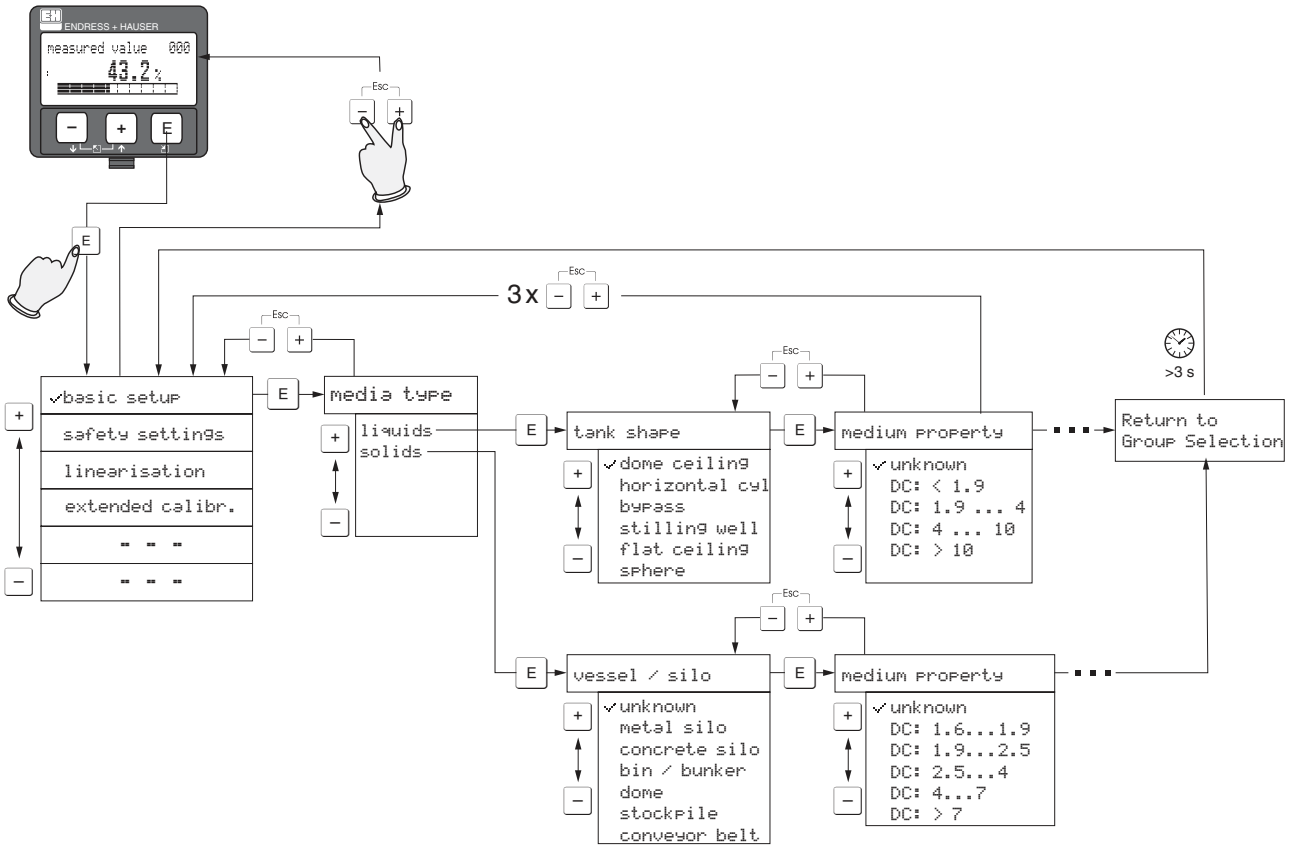

Example - Selection and configuration in Operation menu:

1.) Change from Measured Value Display to **Group Selection** by pressing E

2.) Press − or + to select the required **Function Group** (e.g.. "basic setup (00)") and confirm by pressing E ➜ First f**unction** (e.g. "tank shape (002)") is selected.

Note!
The active selection is marked by a ⋰ in front of the menu text.

3.) Activate Edit mode with + or −.

Selection menus:

a) Select the required **Parameter** in selected **function** (e.g. "tank shape (002)") with − or +.

b) E confirms selection ➜ ⋰ appears in front of the selected parameter

c) E confirms the edited value ➜ system quits Edit mode

d) + + − (= Esc) interrupts selection ➜ system quits Edit mode

Typing in numerals and text:

a) Press + or − to edit the first character of the **numeral / text** (e.g. "empty calibr. (005)")

b) E positions the cursor at the next character ➜ continue with (a) until you have completed your input

c) if a ↵ symbol appears at the cursor, press E to accept the value entered ➜ system quits Edit mode

d) + + − (= Esc) interrupts the input, system quits Edit mode

4) Press E to select the next **function** (e.g. "medium property (003)")

5) Press + + − (= Esc) once ➜ return to previous **function** (e.g. "tank shape (002)")

Press + + − (= Esc) twice ➜ return to **Group selection**

6) Press + + − (= Esc) to return to **Measured value display**

L00-FMR250xx-19-00-00-en-002

5.1.1 General structure of the operating menu

The operating menu is made up of two levels:
- **Function groups (00, 01, 03, …, 0C, 0D):** The individual operating options of the instrument are split up roughly into different function groups. The function groups that are available include, e. g.: "**basic setup**", "**safety settings**", "**output**", "**display**", etc.
- **Functions (001, 002, 003, …, 0D8, 0D9):** Each function group consists of one or more functions. The functions perform the actual operation or parameterisation of the instrument. Numerical values can be entered here and parameters can be selected and saved. The available functions of the "**basic setup**" **(00)** function group include, e. g.: "**tank shape**" **(002)**, "**medium property**" **(003)**, "**process cond.**" **(004)**, "**empty calibr.**" **(005)**, etc.

If, for example, the application of the instrument is to be changed, carry out the following procedure:

1. Select the "**basic setup**" **(00)** function group.
2. Select the "**tank shape**" **(002)** function (where the existing tank shape is selected).

5.1.2 Identifying the functions

For simple orientation within the function menus (→ 📄 90), for each function a position is shown on the display.

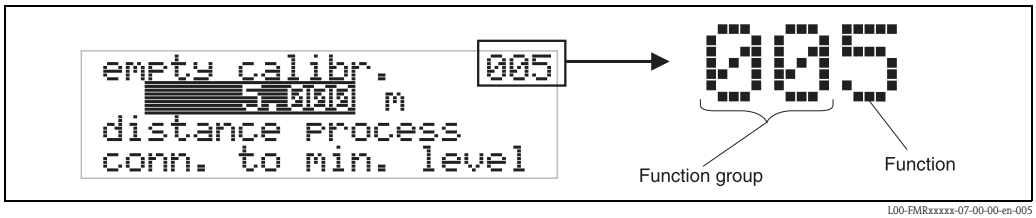

The first two digits identify the function group:
- **basic setup** **00**
- **safety settings** **01**
- **linearisation** **04**

. . .

The third digit numbers the individual functions within the function group:
- **basic setup** **00** →
  - **tank shape** **002**
  - **medium property** **003**
  - **process cond.** **004**

  . . .

Hereafter the position is always given in brackets (e. g. "**tank shape**" **(002)**) after the described function.

5.2 Display and operating elements

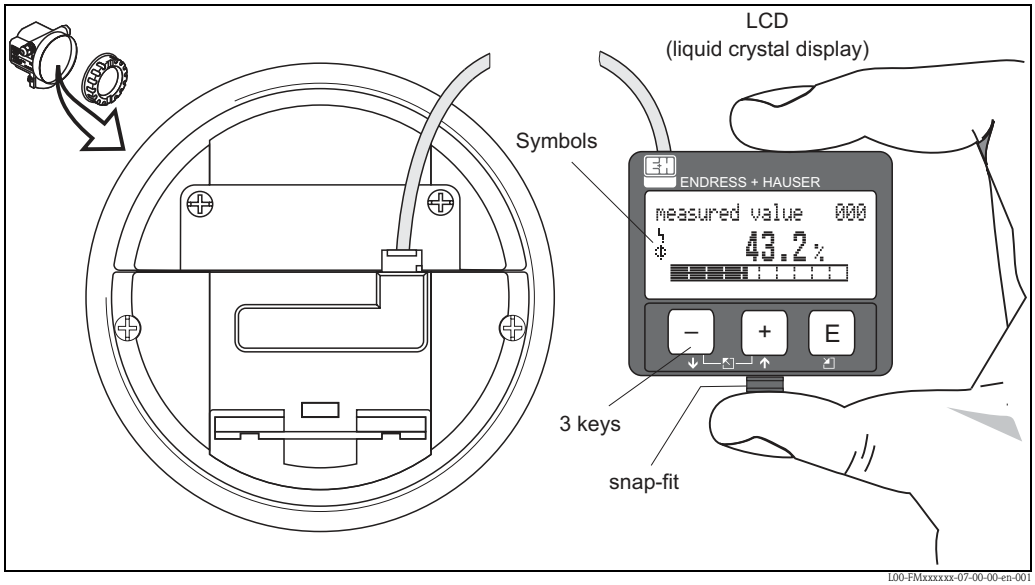

Layout of the display and operating elements

The LCD display can be removed to ease operation by simply pressing the snap-fit (see graphic above). It is connected to the device by means of a 500 mm (19.7 in) cable.

Note!
To access the display the cover of the electronic compartment may be removed even in hazardous area (IS and XP).

5.2.1 Display

Liquid crystal display (LCD):

Four lines with 20 characters each. Display contrast adjustable through key combination.

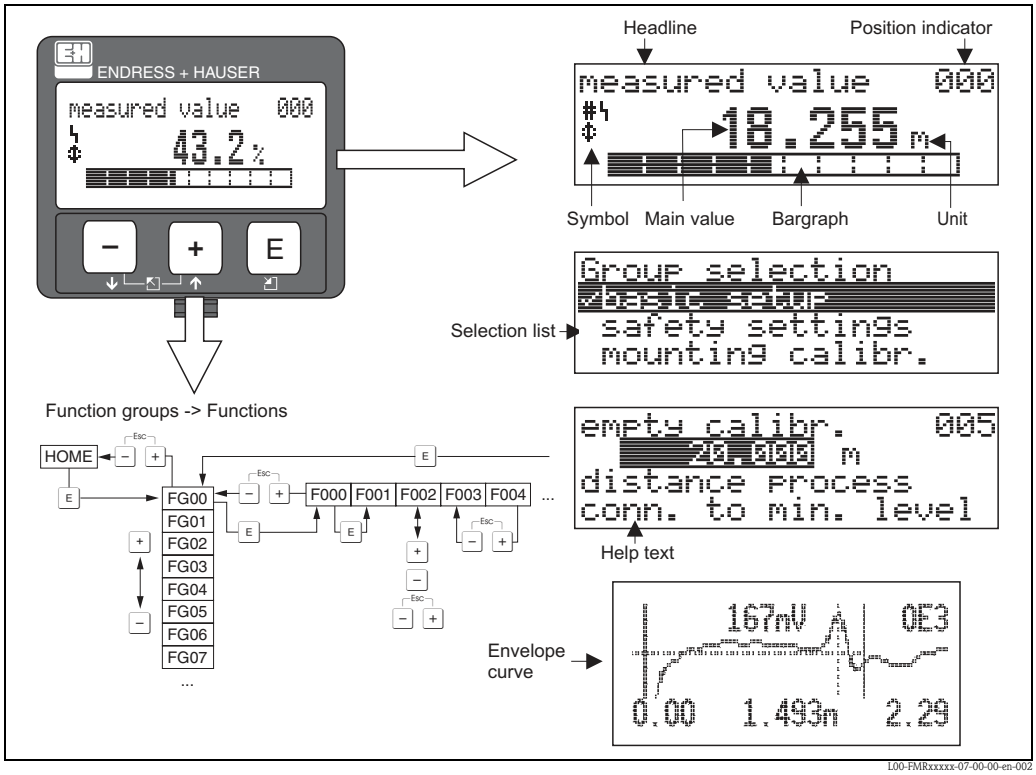

Display

5.2.2 Display symbols

The following table describes the symbols that appear on the liquid crystal display:

Sybmol	Meaning
	ALARM_SYMBOL This alarm symbol appears when the instrument is in an alarm state. If the symbol flashes, this indicates a warning.
	LOCK_SYMBOL This lock symbol appears when the instrument is locked, i. e. if no input is possible.
	COM_SYMBOL This communication symbol appears when a data transmission via e. g. HART, PROFIBUS PA or FOUNDATION Fieldbus is in progress.

5.2.3 Key assignment

The operating elements are located inside the housing and are accessible for operation by opening the lid of the housing.

Function of the keys

Key(s)	Meaning
[+] or [↑]	Navigate upwards in the selection list. Edit numeric value within a function.
[−] or [↓]	Navigate downwards in the selection list. Edit numeric value within a function.
[Esc] [−] [+] or [←]	Navigate to the left within a function group.
[E]	Navigate to the right within a function group, confirmation.
[+] and [E] or [−] and [E]	Contrast settings of the LCD.
[+] and [−] and [E]	Hardware lock / unlock After a hardware lock, an operation of the instrument via display or communication is not possible! The hardware can only be unlocked via the display. An unlock parameter must be entered to do so.

5.3 Local operation

5.3.1 Locking of the configuration mode

The Micropilot can be protected in two ways against unauthorised changing of instrument data, numerical values or factory settings:

Function "unlock parameter" (0A4):

A value **<> 100** (e. g. 99) must be entered in "**unlock parameter**" **(0A4)** in the "**diagnostics**" **(0A)** function group. The lock is shown on the display by the symbol and can be released again either via the display or by communication.

Hardware lock:

The instrument is locked by pressing the [+], [−] and [E] keys at the same time.
The lock is shown on the display by the symbol and can **only** be unlocked again via the display by pressing the [+], [−] and [E] keys at the same time again. It is **not** possible to unlock the hardware by communication. All parameters can de displayed even if the instrument is locked.

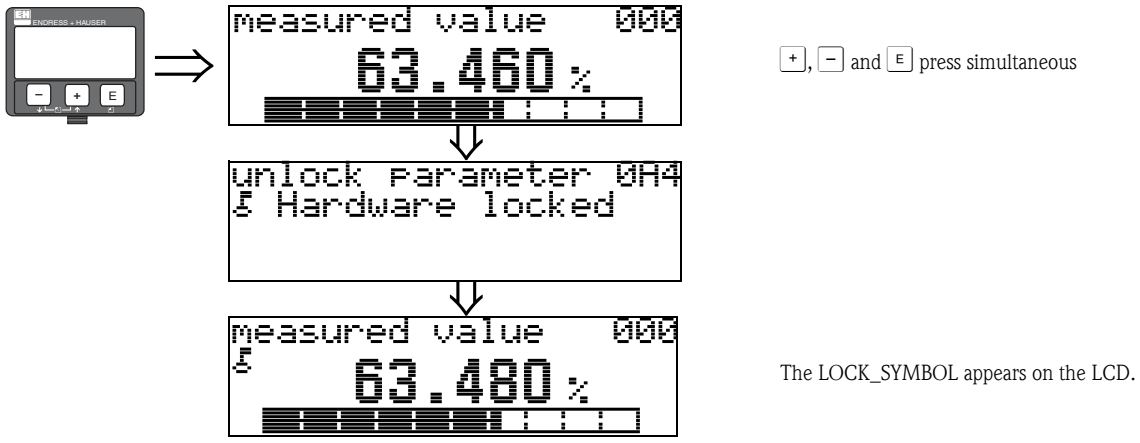

5.3.2 Unlocking of configuration mode

If an attempt is made to change parameters on display when the instrument is locked, the user is automatically requested to unlock the instrument:

Function "unlock parameter" (0A4):

By entering the unlock parameter (on the display or via communication)

100 = for HART devices

the Micropilot is released for operation.

Hardware unlock:

After pressing the [+], [−] and [E] keys at the same time, the user is asked to enter the unlock parameter

100 = for HART devices.

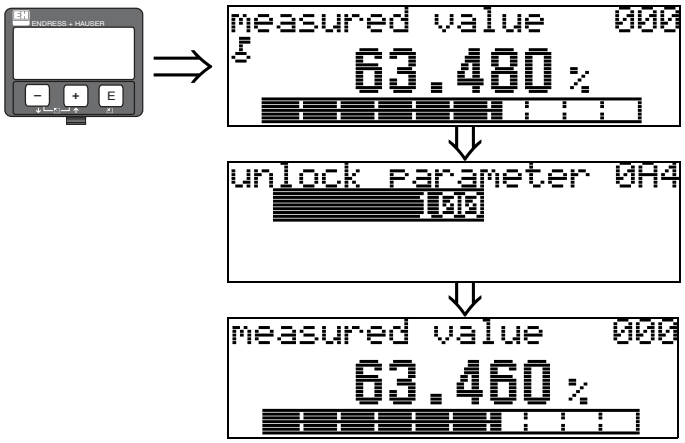

[+], [−] and [E] press simultaneous

Please enter unlock code and confirm with [E].

Caution!
Changing certain parameters such as all sensor characteristics, for example, influences numerous functions of the entire measuring system, particularly measuring accuracy. There is no need to change these parameters under normal circumstances and consequently, they are protected by a special code known only to the Endress+Hauser service organization.
Please contact Endress+Hauser if you have any questions.

5.3.3 Factory settings (Reset)

Caution!
A reset sets the instrument back to the factory settings. This can lead to an impairment of the measurement. Generally, you should perform a basic setup again following a reset.

A reset is only necessary if the instrument...
- ... no longer functions
- ... must be moved from one measuring point to another
- ... is being de-installed /put into storage/installed



User input ("reset" (0A3)):
- 333 = customer parameters

333 = reset customer parameters
This reset is recommended whenever an instrument with an unknown "history" is to be used in an application:
- The Micropilot is reset to the default values.
- The customer specific tank map is not deleted.
- A linearisation is switched to "**linear**" although the table values are retained. The table can be reactivated in the "**linearisation**" **(04)** function group.

List of functions that are affected by a reset:
- tank shape (002) – liquids only
- vessel / silo (00A) – solids only
- empty calibr. (005)
- full calibr. (006)
- pipe diameter (007) – liquids only
- output on alarm (010)
- output on alarm (011)
- outp. echo loss (012)
- ramp %span/min (013)
- delay time (014)
- safety distance (015)
- in safety dist. (016)
- level/ullage (040)
- linearisation (041)
- customer unit (042)
- diameter vessel (047)
- range of mapping (052)
- pres. Map dist (054)
- offset (057)
- low output limit (062)
- fixed current (063)
- fixed cur. value (064)
- simulation (065)
- simulation value (066)
- 4mA value (068)
- 20mA value (069)
- format display (094)
- distance unit (0C5)
- download mode (0C8)

The tank map can also be reset in the "**mapping**" **(055)** function of the "**extended calibr.**" **(05)** function group.

This reset is recommended whenever an instrument with an unknown "history" is to be used in an application or if a faulty mapping was started:
- The tank map is deleted. The mapping must be recommenced.

5.4 Display and acknowledging error messages

Type of error

Errors that occur during commissioning or measuring are displayed immediately on the local display. If two or more system or process errors occur, the error with the highest priority is the one shown on the display.

The measuring system distinguishes between two types of error:

- **A (Alarm):**
  Instrument goes into a defined state (e. g. max 22 mA)
  Indicated by a constant symbol.
  (For a description of the codes, → 72)
- **W (Warning):**
  Instrument continue measuring, error message is displayed.
  Indicated by a flashing symbol.
  (For a description of the codes, → 72)
- **E (Alarm / Warning):**
  Configurable (e. g. loss of echo, level within the safety distance)
  Indicated by a constant/flashing symbol.
  (For a description of the codes, → 72)



5.4.1 Error messages

Error messages appear as four lines of plain text on the display. In addition, a unique error code is also output. A description of the error codes, → 72.

- The "**diagnostics**" **(0A)** function group can display current errors as well as the last errors that occurred.
- If several current errors occur, use + or − to page through the error messages.
- The last occurring error can be deleted in the "**diagnostics**" **(0A)** function group with the funktion"**clear last error**" **(0A2)**.

5.5 HART communication

Apart from local operation, you can also parameterise the measuring instrument and view measured values by means of a HART protocol. There are two options available for operation:
- Operation via the universal handheld operating unit, the HART Field Communicator 375, 475.
- Operation via the Personal Computer (PC) using an operating program (e.g. FieldCare, → 33).

Note!
The Micropilot M can also be operated locally using the keys. If operation is prevented by the keys being locked locally, parameter entry via communication is not possible either.

5.5.1 Handheld unit Field Communicator 375, 475

All device functions can be adjusted via menu operation with the handheld unit Field Communicator 375, 475.

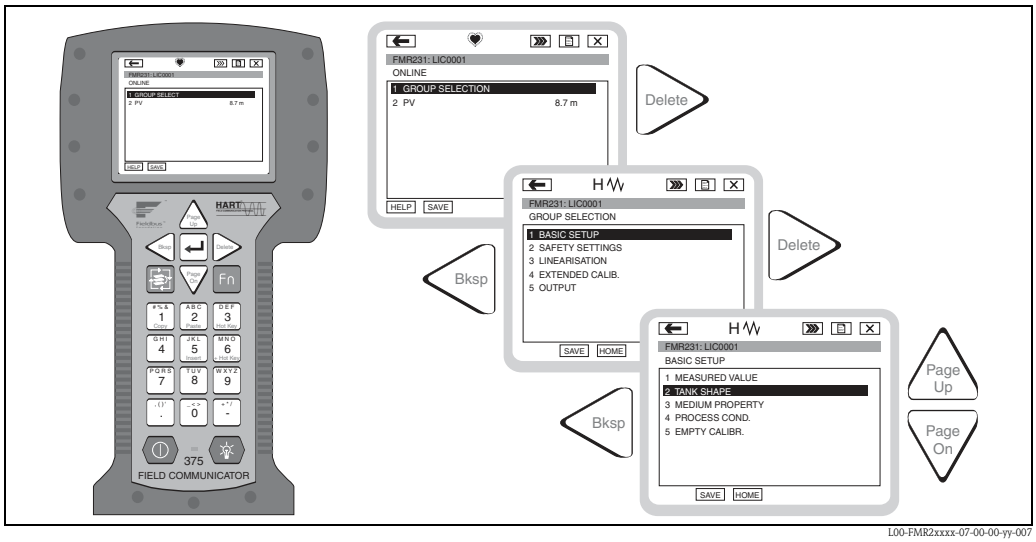

Menu operation with the Field Communicator 375 handheld instrument

Note!
- Further information on the Field Communicator 375, 475 unit is given in the respective operating manual included in the transport bag of the instrument.

5.5.2 Endress+Hauser operating program

The operating program FieldCare is an Endress+Hauser Plant Asset Management Tool based on FDT technology. You can use FieldCare to configure all your Endress+Hauser devices, as well as devices from other manufacturers that support the FDT standard. Hardware and software requirements you can find on the internet:
www.endress.com → select your country → search: FieldCare → FieldCare → Technical Data.

FieldCare supports the following functions:
- Configuration of transmitters in online operation
- Singal analysis via envelope curve
- Tank linearisation
- Loading and saving device data (upload/download)
- Documentation of the measuring point

Connection options:
- HART via Commubox FXA195 and the USB port on a computer
- Commubox FXA291 with ToF Adapter FXA291 (USB) via service interface

Menu-guided commissioning

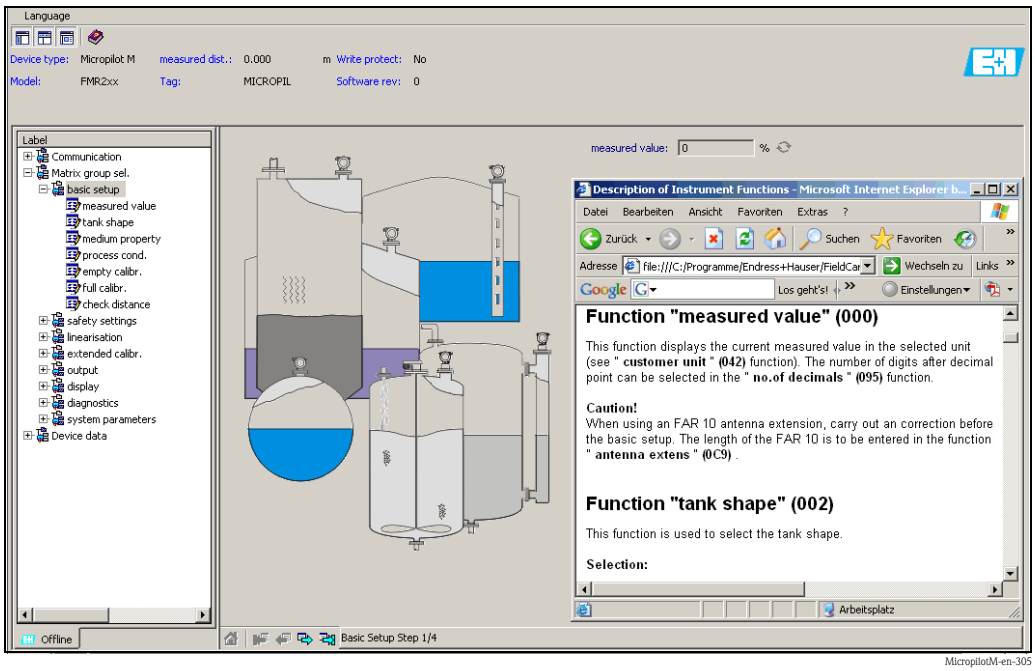

MicropilotM-en-305

Signal analysis via envelope curve

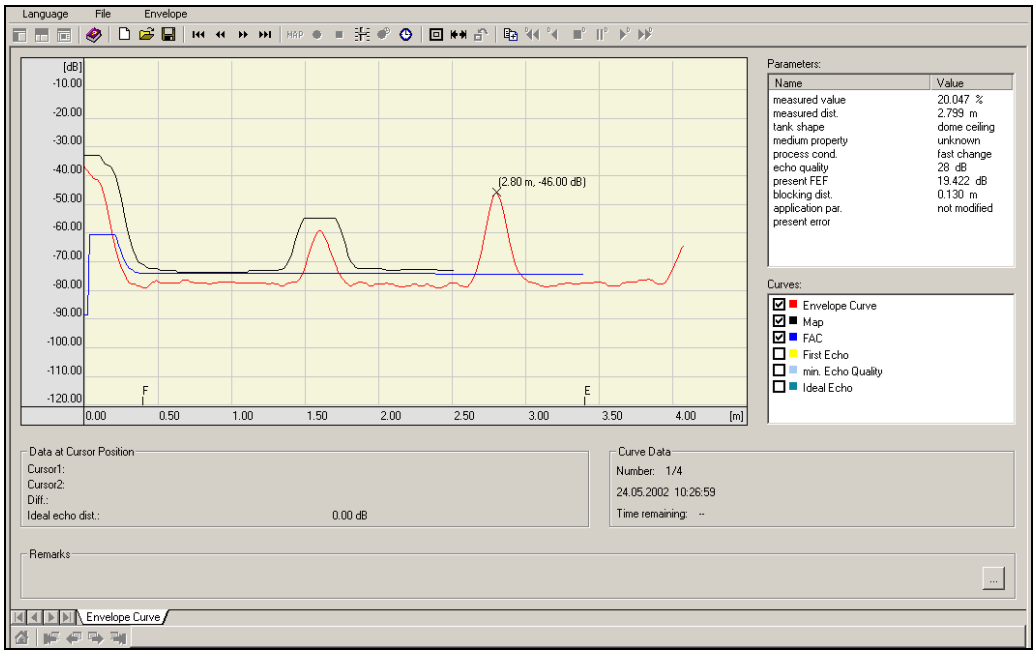

MicropilotM-en-306

Tank linearisation

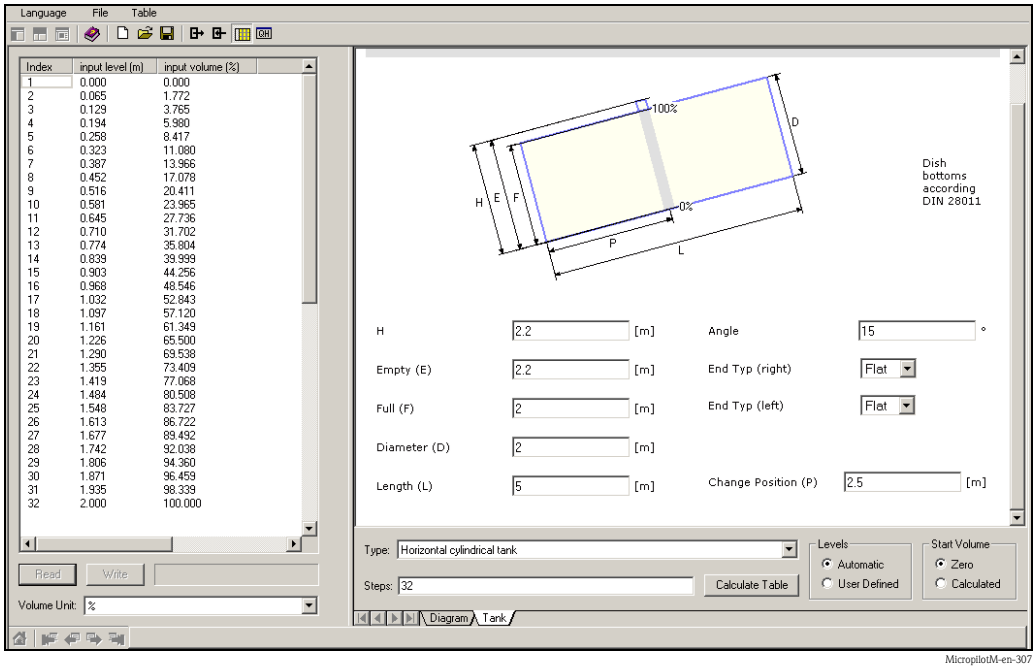

MicropilotM-en-307

6 Commissioning

6.1 Function check

Make sure that all final checks have been completed before you start up your measuring point:
- Checklist "Post installation check", → 28.
- Checklist "Post connection check", → 34.

6.2 Switching on the measuring device

When the instrument is switched on for the first time, the following messages appear in a sequence of 5 s on the display: software version, communication protocol and language selection.

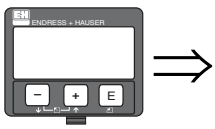

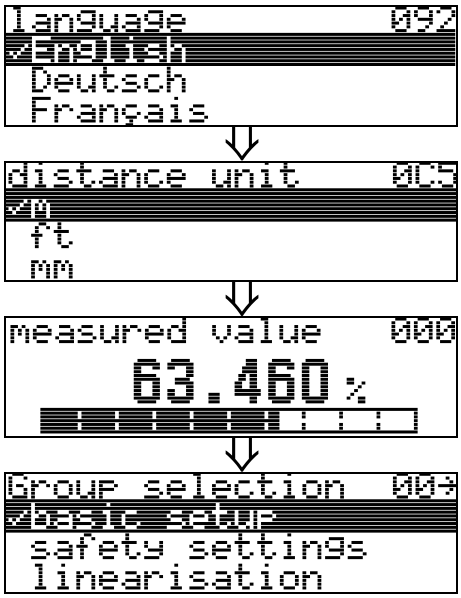

Select the language (this message appears the first time the instrument is switched on)

Select the basic unit (this message appears the first time the instrument is switched on)

The current measured value is displayed

After E is pressed, you reach the group selection.

This selection enables you to perform the basic setup

6.3 Basic Setup

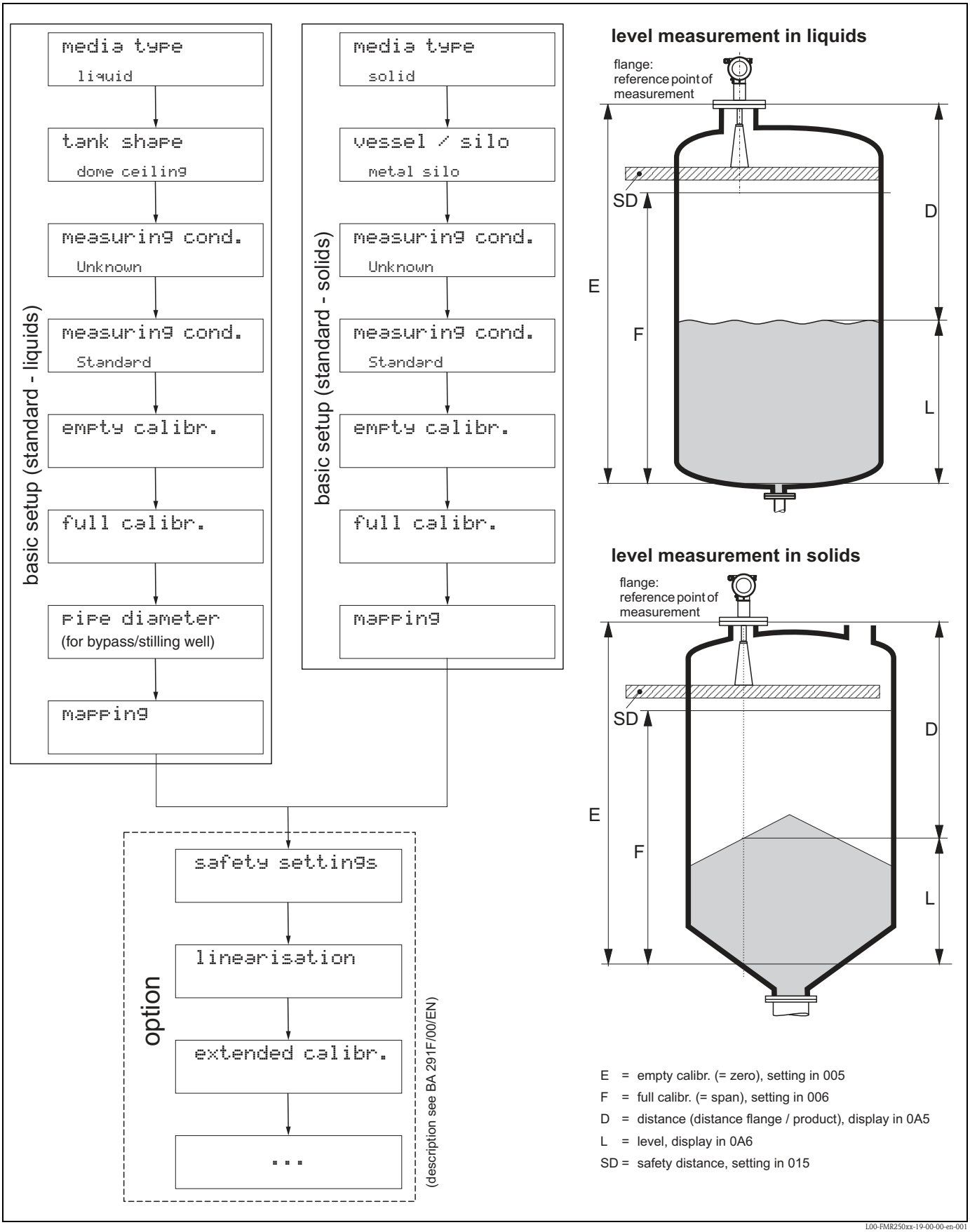

Caution!
The basic setup is sufficient for successful commissioning in most applications. Complex measuring operations necessitate additional functions that the user can use to customise the Micropilot as necessary to suit his specific requirements. The functions available to do this are described in detail in the BA291F/00/EN.

Comply with the following instructions when configuring the functions in the "**basic setup**" **(00)**:
- Select the functions as described, → 📄 35.
- Some functions can only be used depending on the parameterisation of the instrument. For example, the pipe diameter of a stilling well can only be entered if "**stilling well**" was selected beforehand in the "**tank shape**" **(002)** function.
- Certain functions (e. g. starting an interference echo mapping (053)) prompt you to confirm your data entries. Press [+] or [−] to select "**YES**" and press [E] to confirm. The function is now started.
- If you do not press a key during a configurable time period (→ function group "**display**" **(09)**), an automatic return is made to the home position (measured value display).

Note!
- The instrument continues to measure while data entry is in progress, i. e. the current measured values are output via the signal outputs in the normal way.
- If the envelope curve mode is active on the display, the measured values are updated in a slower cycle time. Thus, it is advisable to leave the envelope curve mode after the measuring point has been optimised.
- If the power supply fails, all preset and parameterised values remain safely stored in the EEPROM.
- All functions are described in detail, as is the overview of the operating menu itself, in the manual **"BA291F - Description of Instrument Functions**", which is found on the enclosed CD-ROM.
- The default values of the parameters are typed in **boldface**.

6.4 Basic Setup with the device display

Function "measured value" (000)



This function displays the current measured value in the selected unit (see "**customer unit**" **(042)** function). The number of digits after decimal point can be selected in the "**no.of decimals**" **(095)** function.

6.4.1 Function group "basic setup" (00)



Function "media type" (001)



This function is used to select the media type.

Selection:
- liquid
- **solid**

With the selection "liquid" the following functions can be adjusted:		**With the selection "solids" the following functions can be adjusted:**	
■ tank shape	002	■ vessel / silo	00A
■ medium property	003	■ medium property	00B
■ process cond.	004	■ process cond.	00C
■ empty calibr.	005	■ empty calibr.	005
■ full calibr.	006	■ full calibr.	006
■ pipe diameter	007	■ check distance	051
■ check distance	051	■ range of mapping	052
■ range of mapping	052	■ start mapping	053
■ start mapping	053	■ . . .	
■ . . .			

Function "tank shape" (002), liquids only

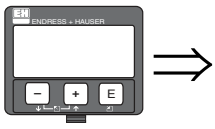



This function is used to select the tank shape.

Selection:
- **dome ceiling**
- horizontal cyl
- bypass
- stilling well
- flat ceiling
- sphere

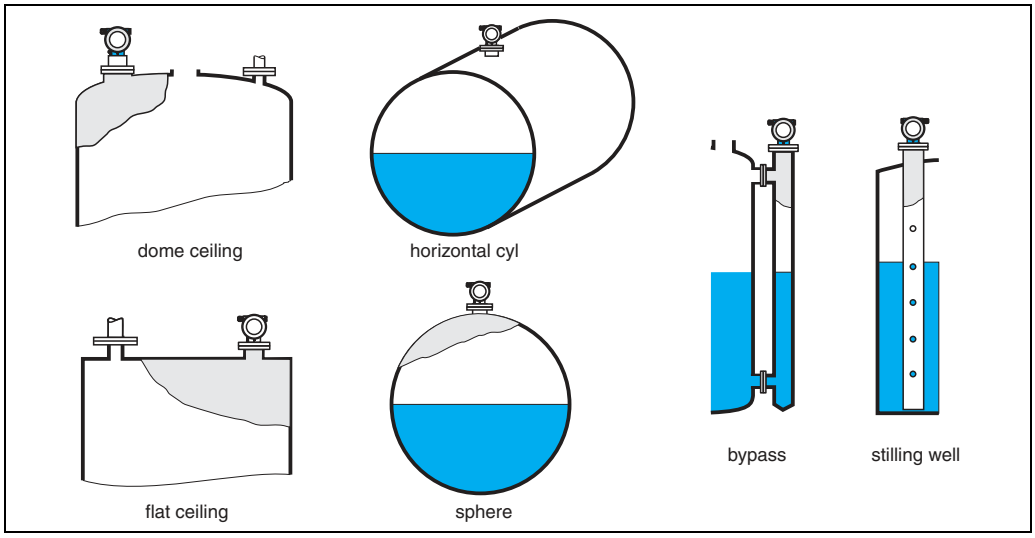

L00-FMR2xxxx-14-00-06-en-007

Function "medium property" (003), liquids only

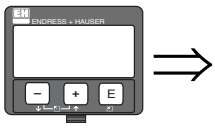



This function is used to select the dielectric constant.

Selection:
- **unknown**
- DC: < 1.9
- DC: 1.9 ... 4
- DC: 4 ... 10
- DC: > 10

Product class	DC (εr)	Examples
A	1,4 to 1,9	non-conducting liquids, e. g. liquefied gas [1]
B	1,9 to 4	non-conducting liquids, e. g. benzene, oil, toluene, …
C	4 to 10	e. g. concentrated acids, organic solvents, esters, aniline, alcohol, acetone, …
D	>10	conducting liquids, e. g. aqueous solutions, dilute acids and alkalis

1) Treat Ammonia NH3 as a medium of group A, i. e. use FMR230 in a stilling well.

Function "process cond." (004) , liquids only

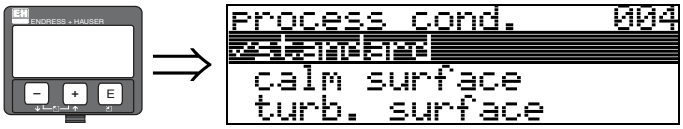

This function is used to select the process conditions.

Selection:
- **standard**
- calm surface
- turb. surface
- agitator
- fast change
- test:no filter

standard	calm surface	turb. surface
For all applications that do not fit into any of the following groups.	Storage tanks with immersion tube or bottom filling.	Storage / buffer tanks with rough surface due to free filling or mixer nozzles.
	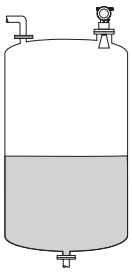	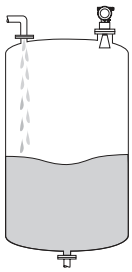
The filter and output damping are set to average values.	The averaging filters and output damping are set to high values. → steady meas. value → precise measurement → slower reaction time	Special filters to smooth the input signals are emphasised. → smoothed meas. value → medium fast reaction time

agitator	fast change	test:no filter
Agitated surfaces (with possible vortex) due to agitators.	Rapid change of level, particularly in small tanks.	All filters can be switched off for service / diagnostic purposes.
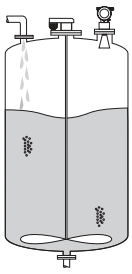	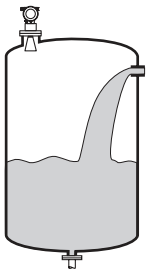	
Special filters to smooth the input signals are set to high values. → smoothed meas. value → medium fast reaction time → minimization of effects by agitator blades.	The averaging filters are set to low values. The output damping is set to 0. → rapid reaction time → possibly unsteady meas. value	All filters off.

Function "vessel / silo" (00A), solids only

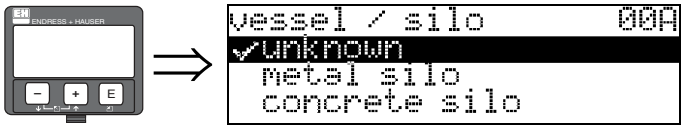

This function is used to select the vessel / silo.

Selection:
- **unknown**
- metal silo
- concrete silo
- bin / bunker
- dome
- stockpile
- conveyor belt

Function "medium property" (00B), solids only

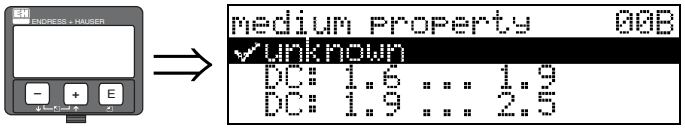

This function is used to select the dielectric constant.

Selection:
- **unknown**
- DC: 1.6 ... 1.9
- DC: 1.9 ... 2.5
- DC: 2.5 ... 4
- DC: 4 ... 7
- DC: > 7

Media group	DK (Er)	Examples
A	1.6 to 1.9	– Plastic granulate – White lime, special cement – Sugar
B	1.9 to 2.5	– Portland cement, plaster
C	2.5 to 4	– Grain, seeds – Ground stones – Sand
D	4 to 7	– Naturally moist (ground) stones, ores – Salt
E	> 7	– Metallic powder – Carbon black – Coal

The respective lower group applies for very loose or loosened bulk solids.

Function "process cond." (00C), solids only



This function is used to select the process conditions.

Selection:
- **standard**
- fast change
- slow change
- test:no filter

Function "empty calibr." (005)

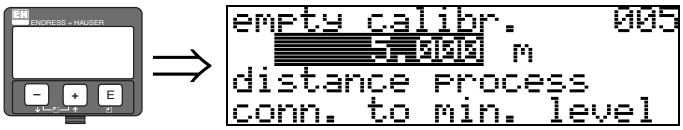

This function is used to enter the distance from the flange (reference point of the measurement) to the minimum level (=zero).

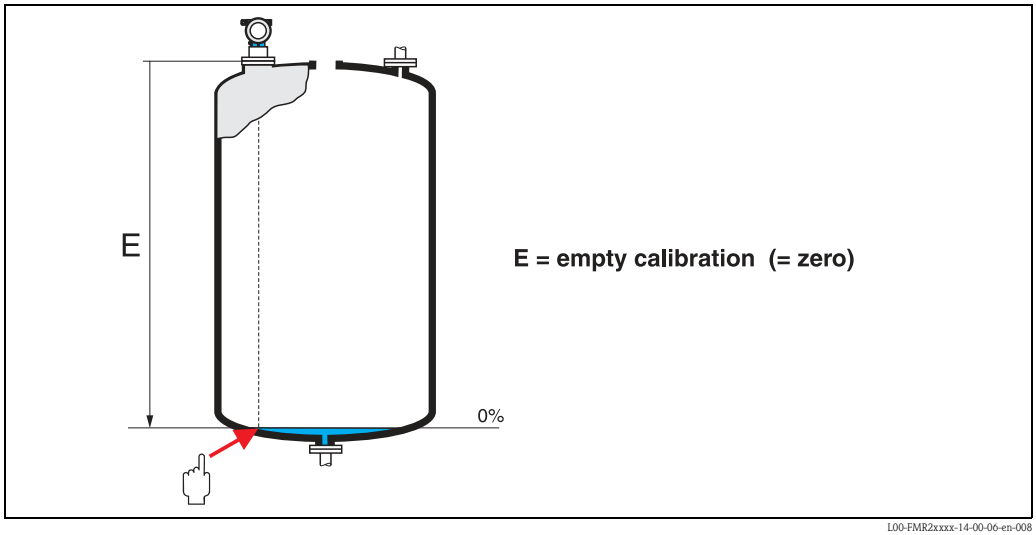

Caution!
For dish bottoms or conical outlets, the zero point should be no lower than the point at which the radar beam hits the bottom of the tank.

Function "full calibr." (006)

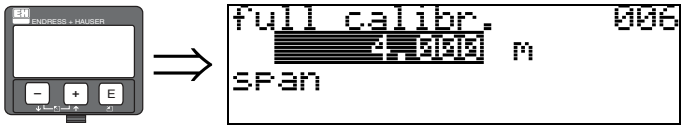

This function is used to enter the distance from the minimum level to the maximum level (=span).

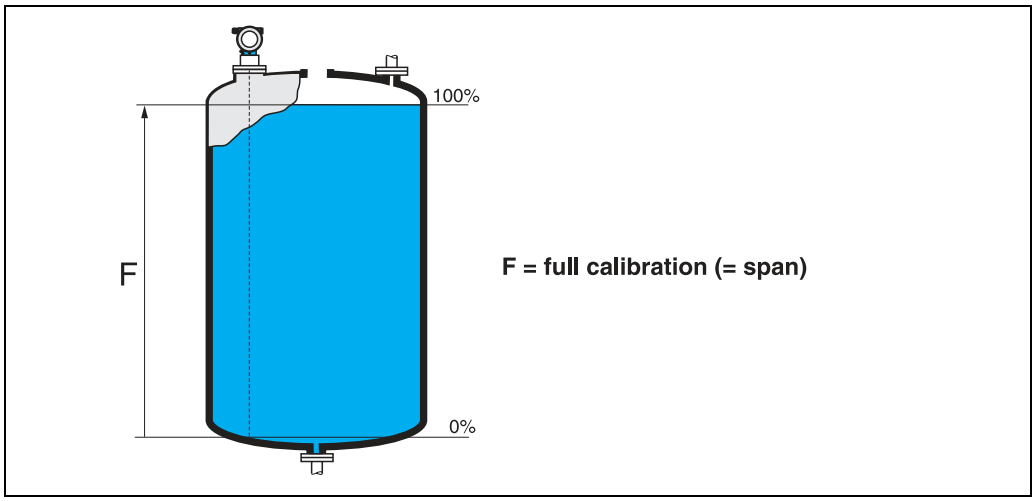

L00-FMR2xxxx-14-00-06-en-009

Note!
If **bypass** or **stilling well** was selected in the "**tank shape**" **(002)** function, the pipe diameter is requested in the following step.

Function "pipe diameter" (007)



This function is used to enter the pipe diameter of the stilling well or bypass pipe.

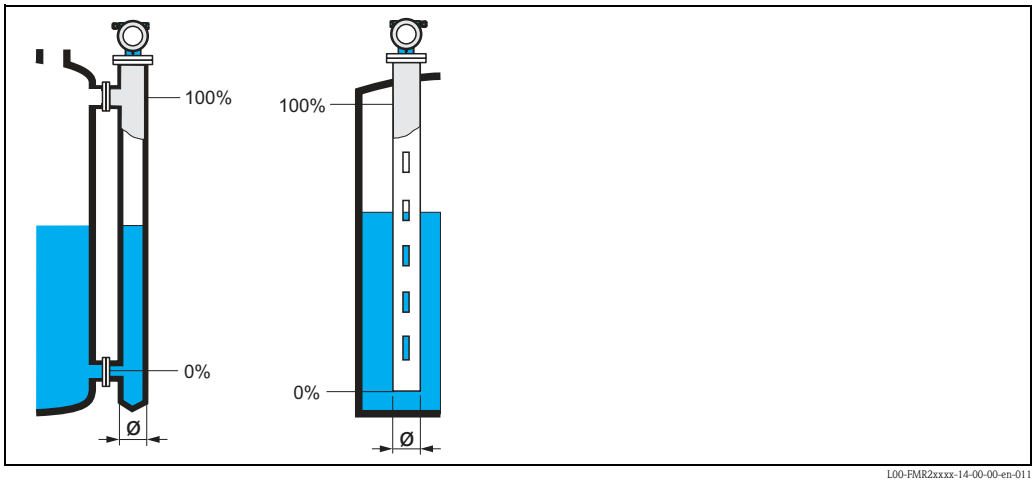

L00-FMR2xxxx-14-00-00-en-011

Microwaves propagate more slowly in pipes than in free space. This effect depends on the inside diameter of the pipe and is automatically taken into account by the Micropilot. It is only necessary to enter the pipe diameter for applications in a bypass or stilling well.

Function "dist./meas.value" (008)

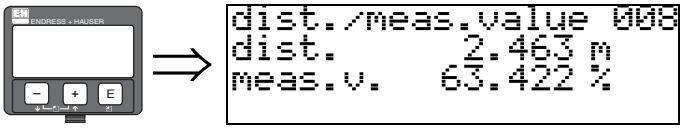

The **distance** measured from the reference point to the product surface and the **level** calculated with the aid of the empty adjustment are displayed. Check whether the values correspond to the actual level or the actual distance. The following cases can occur:
- Distance correct – level correct → continue with the next function, "**check distance**" **(051)**
- Distance correct – level incorrect → Check "**empty calibr.**" **(005)**
- Distance incorrect – level incorrect → continue with the next function, "**check distance**" **(051)**

Function "check distance" (051)



This function triggers the mapping of interference echoes. To do so, the measured distance must be compared with the actual distance to the product surface. The following options are available for selection:

Selection:
- distance = ok
- dist. too small
- dist. too big
- **dist. unknown**
- manual

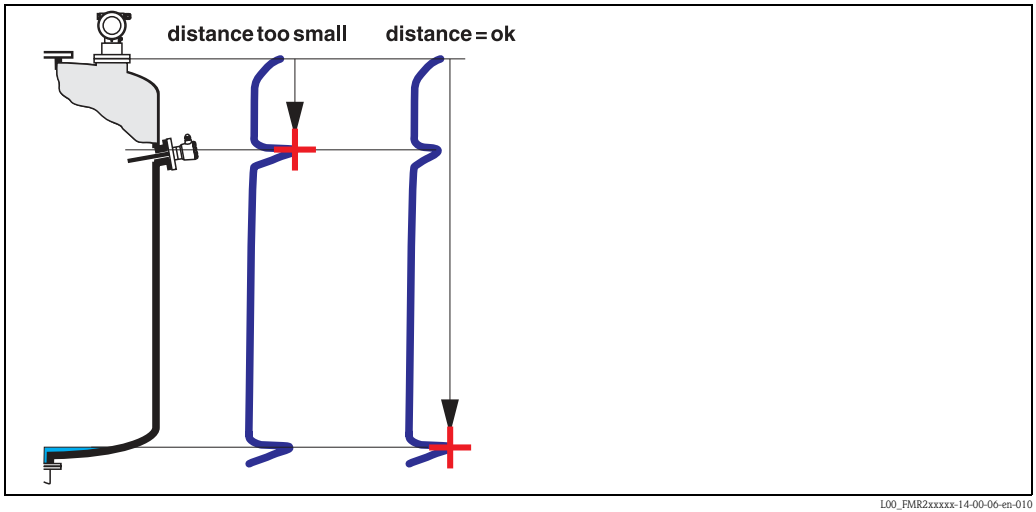

distance = ok
- mapping is carried out up to the currently measured echo
- The range to be suppressed is suggested in the "**range of mapping**" **(052)** function

Anyway, it is wise to carry out a mapping even in this case.

dist. too small
- At the moment, an interference is being evaluated
- Therefore, a mapping is carried out including the presently measured echoes
- The range to be suppressed is suggested in the "**range of mapping**" **(052)** function

dist. too big
- This error cannot be remedied by interference echo mapping
- Check the application parameters **(002), (003), (004)** and "**empty calibr.**" **(005)**

dist. unknown
If the actual distance is not known, no mapping can be carried out.
manual
A mapping is also possible by manual entry of the range to be suppressed. This entry is made in the "**range of mapping**" **(052)** function.

Caution!
The range of mapping must end 0,5 m (1.6 ft) before the echo of the actual level. For an empty tank, do not enter E, but E – 0,5 m (1.6 ft). If a mapping already exists, it is overwriten up to the distance specified in "**range of mapping**" **(052)**. Beyond this value the existing mapping remains unchanged.

Function "range of mapping" (052)



This function displays the suggested range of mapping. The reference point is always the reference point of the measurement (→ 48). This value can be edited by the operator.
For manual mapping, the default value is 0 m.

Function "start mapping" (053)

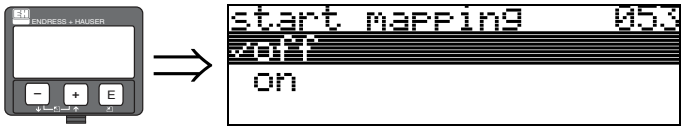

This function is used to start the interference echo mapping up to the distance given in "**range of mapping**" **(052)**.

Selection:
- off → no mapping is carried out
- on → mapping is started

During the mapping process the message "**record mapping**" is displayed.

Caution!
A mapping will be recorded only, if the device is not in alarm-state.

Function "dist./meas.value" (008)

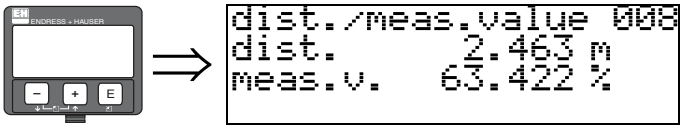

The **distance** measured from the reference point to the product surface and the **level** calculated with the aid of the empty adjustment are displayed. Check whether the values correspond to the actual level or the actual distance. The following cases can occur:

- Distance correct – level correct → continue with the next function, "**check distance**" **(051)**
- Distance correct – level incorrect → Check "**empty calibr.**" **(005)**
- Distance incorrect – level incorrect → continue with the next function, "**check distance**" **(051)**

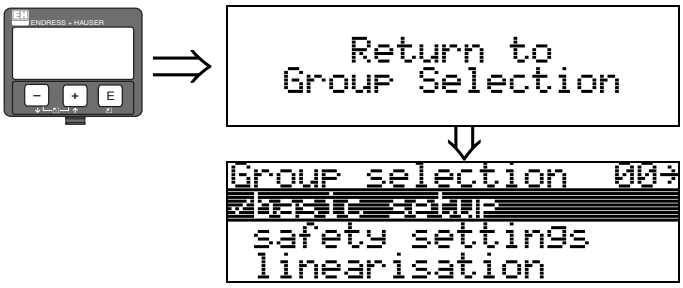

After 3 s, the following message appears

6.4.2 Envelope curve with the device display

After the basic setup, an evaluation of the measurement with the aid of the envelope curve ("**envelope curve**" **(0E)** function group) is recommended.

Function "plot settings" (0E1)

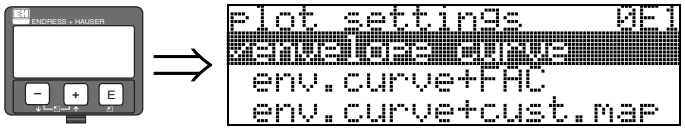

Select which information will be displayed in the LCD:
- **envelope curve**
- env.curve+FAC (on FAC see BA291F/00/EN)
- env.curve+cust.map (i. e. customer tank map is also displayed)

Function "recording curve" (0E2)

This function defines whether the envelope curve is read as a
- **single curve**
  or
- cyclic.



Note!
- If the cyclical envelope curve is active in the display, the measured value is refreshed in a slower cycle time. It is therefore recommended to exit the envelope curve display after optimising the measuring point.
- An **orientation** of the Micropilot can help to optimise measurement in applications with very weak level echos or strong interference echos by increasing the useful echo/reducing the interference echo ("Orientation of the Micropilot", → 77).

Function "envelope curve display" (0E3)

The envelope curve is displayed in this function. You can use it to obtain the following information:

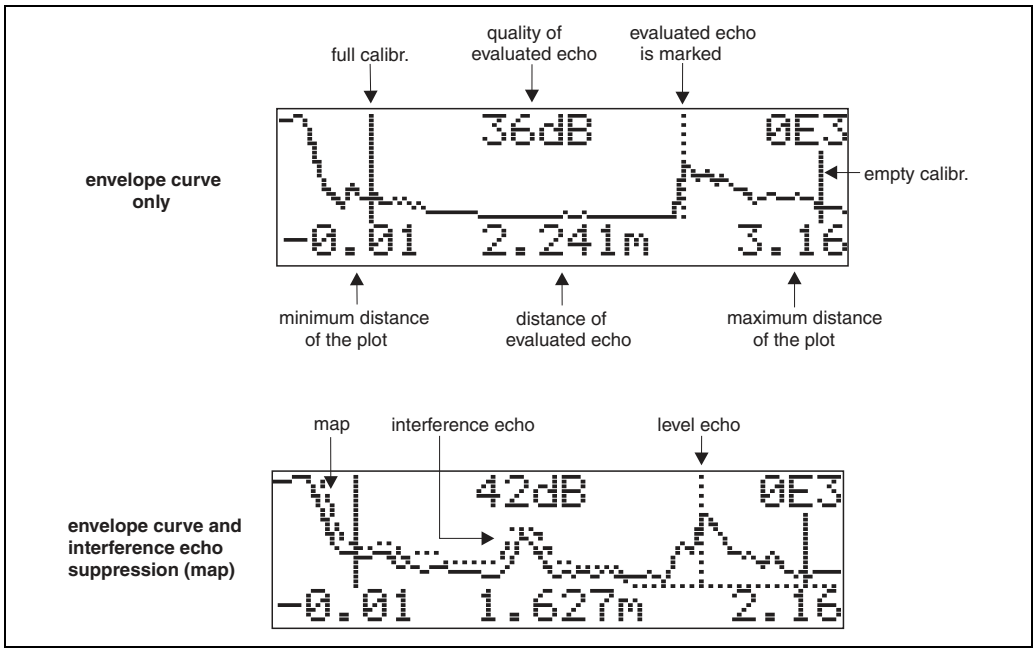

Navigating in the envelope curve display

Using navigation, the envelope curve can be scaled horizontally and vertically and shifted to the left or the right. The active navigation mode is indicated by a symbol in the top left hand corner of the display.

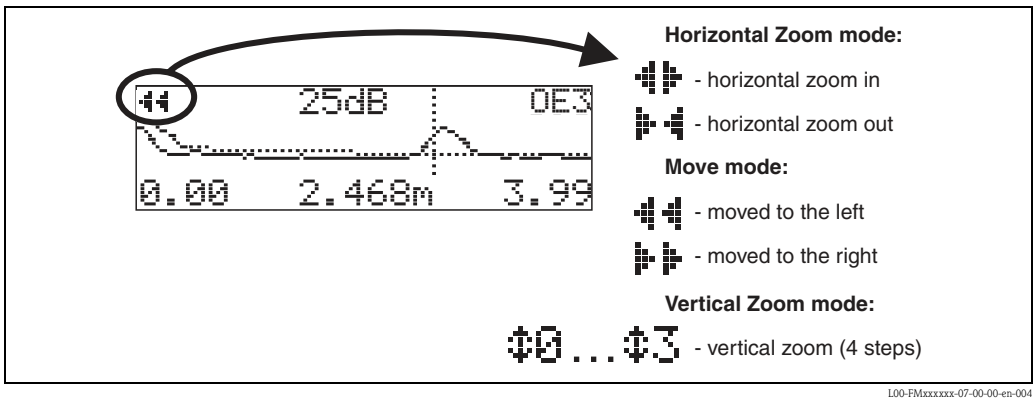

Horizontal Zoom mode

Firstly, go into the envelope curve display. Then press [+] or [−] to switch to the envelope curve navigation. You are then in Horizontal Zoom mode. Either ⇹ or ⇥⇤ is displayed.

- [+] increases the horizontal scale.
- [−] reduces the horizontal scale.

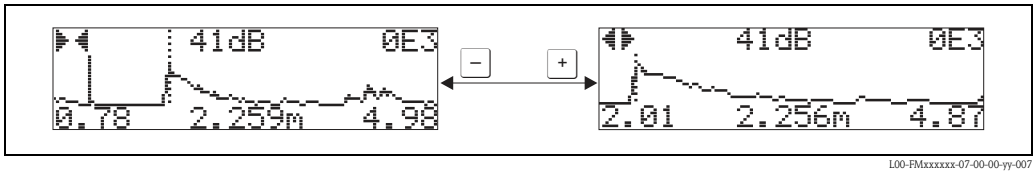

Move mode

Then press [E] to switch to Move mode. Either ◀◀ or ▶▶ is displayed.
- [+] shifts the curve to the right.
- [−] shifts the curve to the left.

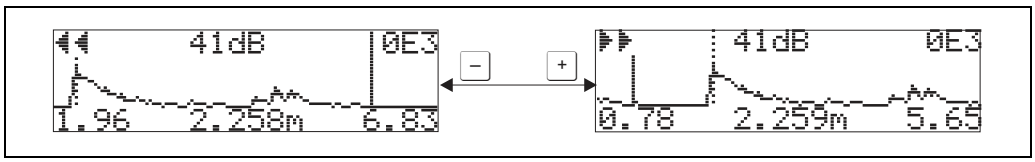

L00-FMxxxxxx-07-00-00-yy-008

Vertical Zoom mode

Press [E] once more to switch to Vertical Zoom mode. ⇳1 is displayed. You now have the following options.
- [+] increases the vertical scale.
- [−] reduces the vertical scale.

The display icon shows the current zoom factor (⇳0 to ⇳3).

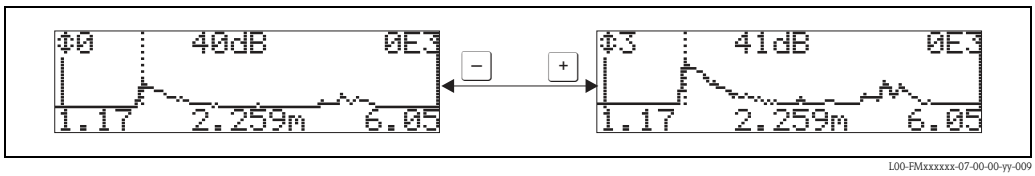

L00-FMxxxxxx-07-00-00-yy-009

Exiting the navigation

- Press [E] again to run through the different modes of the envelope curve navigation.
- Press [+] and [−] to exit the navigation. The set increases and shifts are retained. Only when you reactivate the "**recording curve**" **(0E2)** function does the Micropilot use the standard display again.

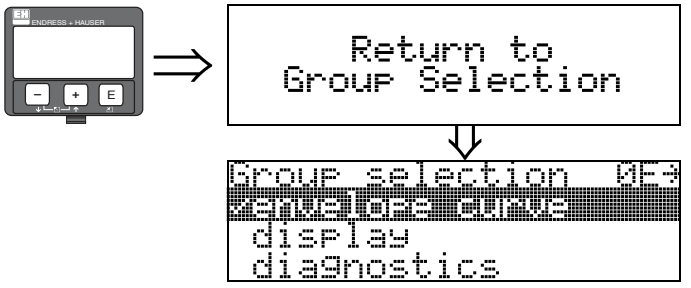

After 3 s, the following message appears

6.5 Basic Setup with the Endress+Hauser operating program

To carry out the basic setup with the operating program, proceed as follows:
- Start the operating program and establish a connection.
- Select the "**basic setup**" function group in the navigation window.

The following display appears on the screen:

Basic Setup step 1/4:

- media type
  - if "**liquid**" is selected in the "**media type**" function for level measurement in liquids
  - if "**solid**" is selected in the "**media type**" function for level measurement in solids

Note!
Each parameter that is changed must be confirmed with the **RETURN** key!

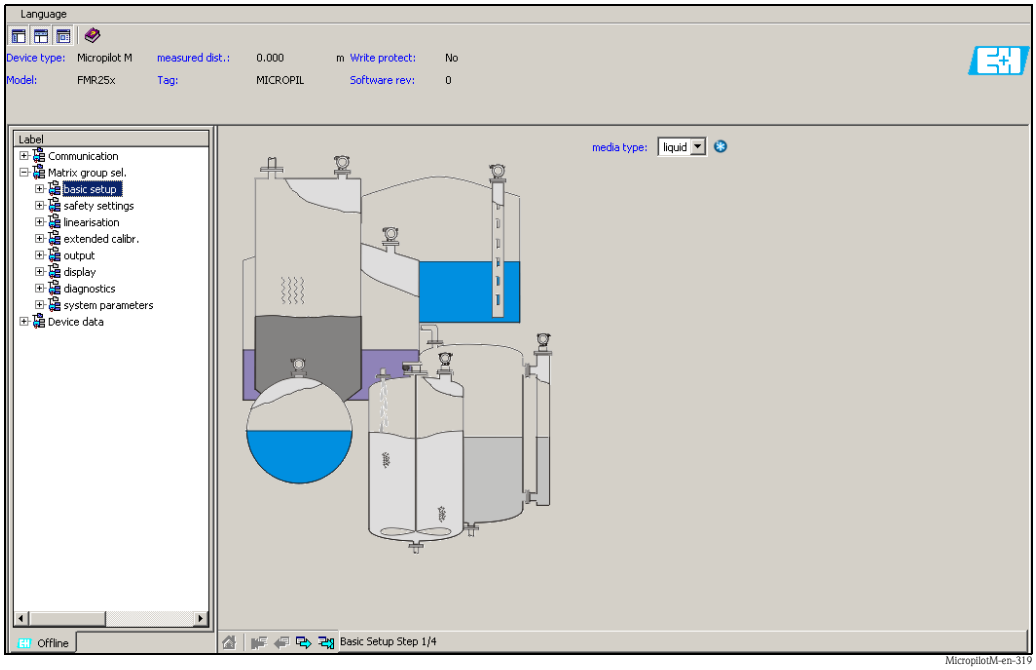

- The "**Next**" button moves you to the next screen display:

Basic Setup step 2/4:

- Enter the application parameters:
  - Tank shape
  - Medium property
  - Process cond.

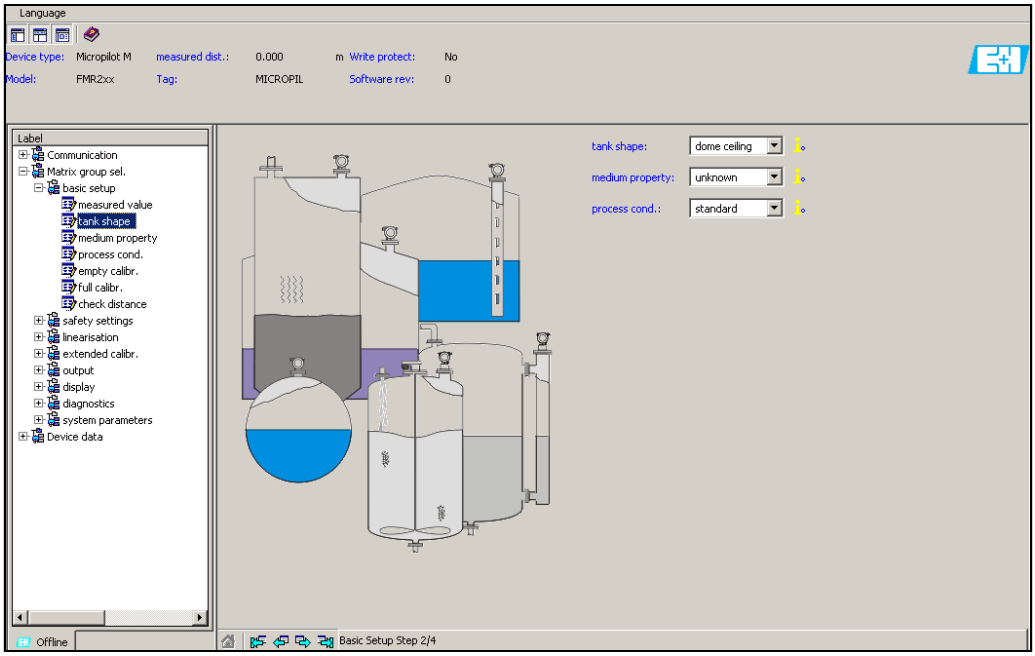

MicropilotM-en-302

Basic Setup step 3/4:

If "**dome ceiling**", "**horizontal cyl**", "**...**" is selected in the "**tank shape**" function, the following display appears on the screen:

- Empty calibr.
- Full calibr.

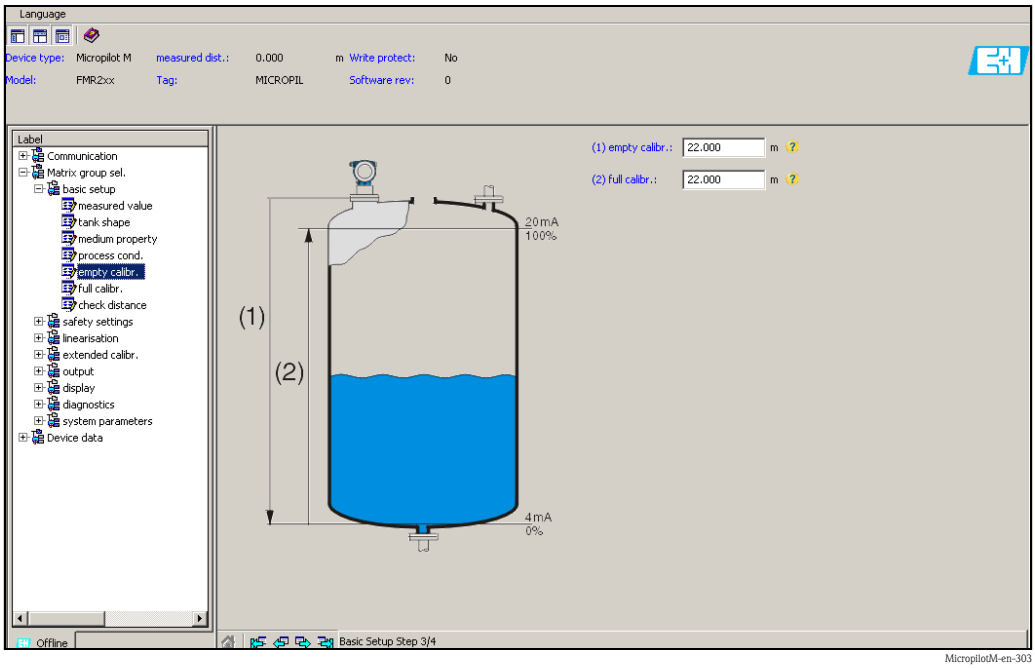

MicropilotM-en-303

Basic Setup step 4/4:

- This step starts the tank mapping
- The measured distance and the current measured value are always displayed in the header

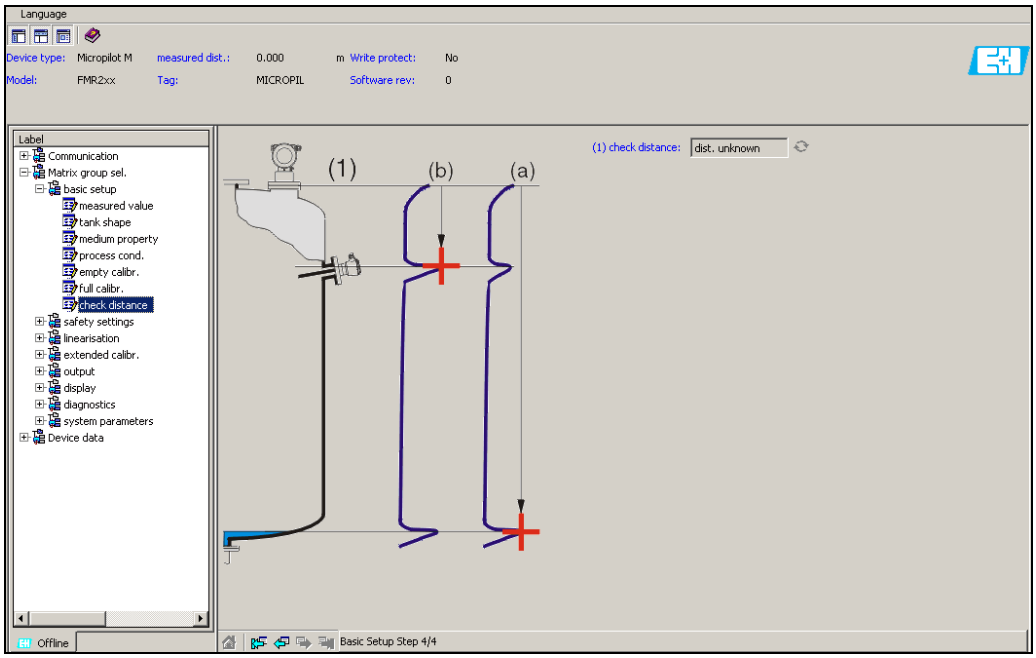

MicropilotM-en-304

6.5.1 Signal analysis via envelope curve

After the basic setup, an evaluation of the measurement using the envelope curve is recommended.

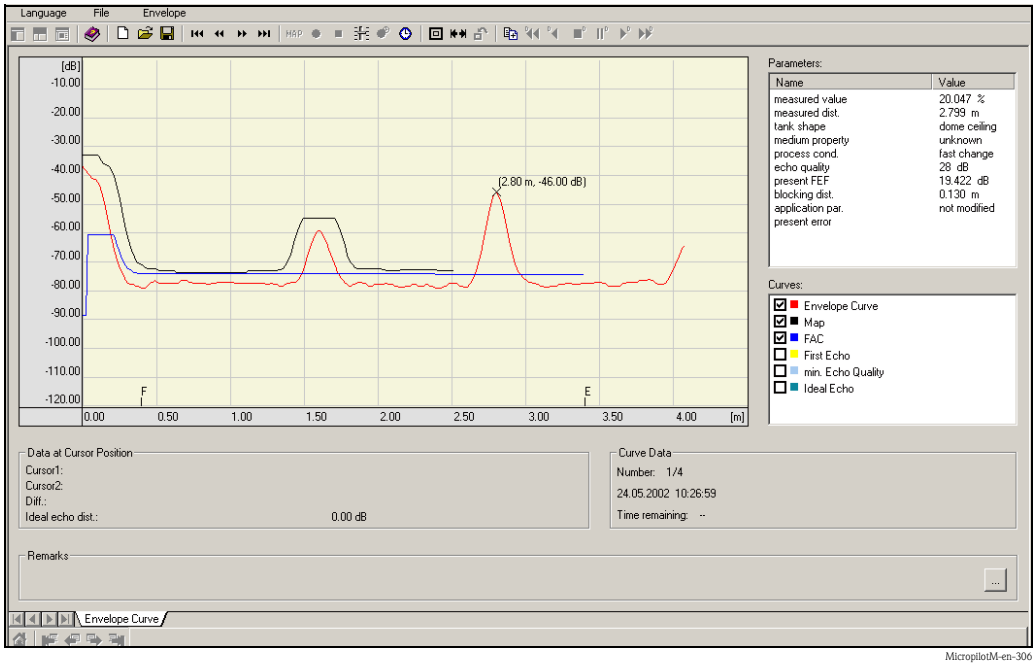

MicropilotM-en-306

Note!
If the level of echo is very weak or there is a heavy interference echo, an orientation of the Micropilot can help optimise the measurement (increase of the useful echo/reduction of the interference echo).

6.5.2 User-specific applications (operation)

For details of setting the parameters of user-specific applications, see separate documentation BA291F/00/EN "Description of Instrument Functions" on the enclosed CD-ROM.

7 Maintenance

The Micropilot M measuring instrument requires no special maintenance.

Exterior cleaning

When cleaning the exterior of measuring devices, always use cleaning agents that do not attack the surface of the housing and the seals.

Replacing seals

The process seals of the sensors must be replaced periodically, particularly if molded seals (aseptic construction) are used. The period between changes depends on the frequency of cleaning cycles and on the temperature of the measured substance and the cleaning temperature.

Repairs

The Endress+Hauser repair concept assumes that the measuring devices have a modular design and that customers are able to undertake repairs themselves (→ 79, "Spare Parts"). Please contact Endress+Hauser Service for further information on service and spare parts.

Repairs to Ex-approved devices

When carrying out repairs to Ex-approved devices, please note the following:
- Repairs to Ex-approved devices may only be carried out by trained personnel or by the Endress+Hauser Service.
- Comply with the prevailing standards, national Ex-area regulations, safety instructions (XA) and certificates.
- Only use original spare parts from Endress+Hauser.
- When ordering a spare part, please note the device designation on the nameplate. Only replace parts with identical parts.
- Carry out repairs according to the instructions. On completion of repairs, carry our the specified routine test on the device.
- Only Endress+Hauser Service may convert a certified device into a different certified variant.
- Document all repair work and conversions.

Replacement

After a complete Micropilot or electronic module has been replaced, the parameters can be downloaded into the instrument again via the communication interface. Prerequisite to this is that the data were uploaded to the PC beforehand using the FieldCare.
Measurement can continue without having to carry out a new setup.

- You may have to activate linearisation (see BA291F/00/EN on the enclosed CD-ROM)
- You may need to record the tank map again (see Basic Setup)

After an antenna component or electronic has been replaced, a new calibration must be carried out. This is described in the repair instructions.

8 Accessories

Various accessories, which can be ordered separately from Endress+Hauser, are available for the Micropilot M.

8.1 Weather protection cover

A Weather protection cover made of stainless steel is recommended for outdoor mounting (order code: 543199-0001). The shipment includes the protective cover and tension clamp.

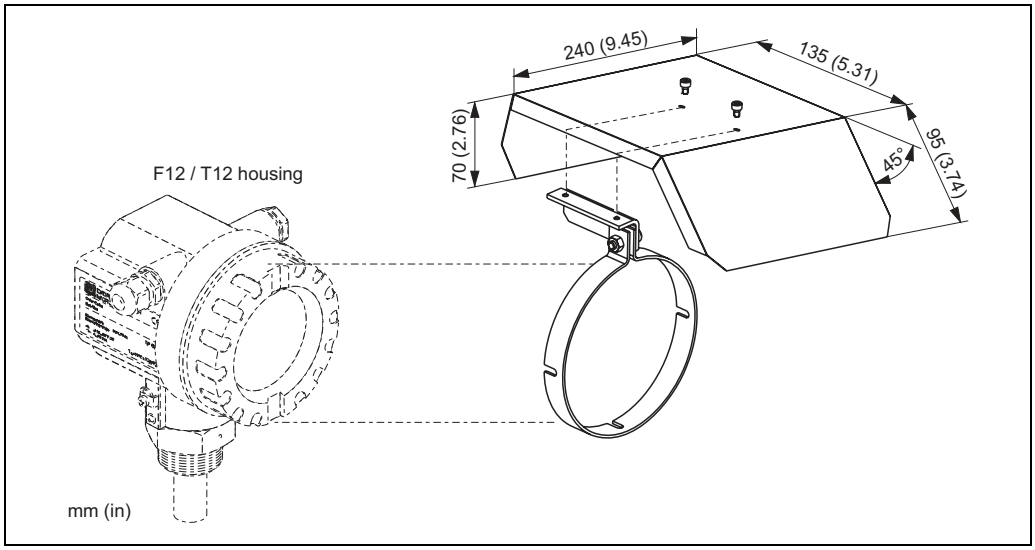

8.2 Commubox FXA195 HART

For intrinsically safe communication with FieldCare via the USB interface. For details refer to TI404F/00/EN.

8.3 Commubox FXA291

The Commubox FXA291 connects Endress+Hauser field instruments with CDI interface (= Endress+Hauser Common Data Interface) to the USB interface of a personal computer or a notebook. For details refer to TI405C/07/EN.

Note!
For the instrument you need the "ToF Adapter FXA291" as an additional accessory.

8.4 ToF Adapter FXA291

The ToF Adapter FXA291 connects the Commubox FXA291 via the USB interface of a personal computer or a notebook for the instrument. For details refer to KA271F/00/A2.

8.5 Remote display FHX40

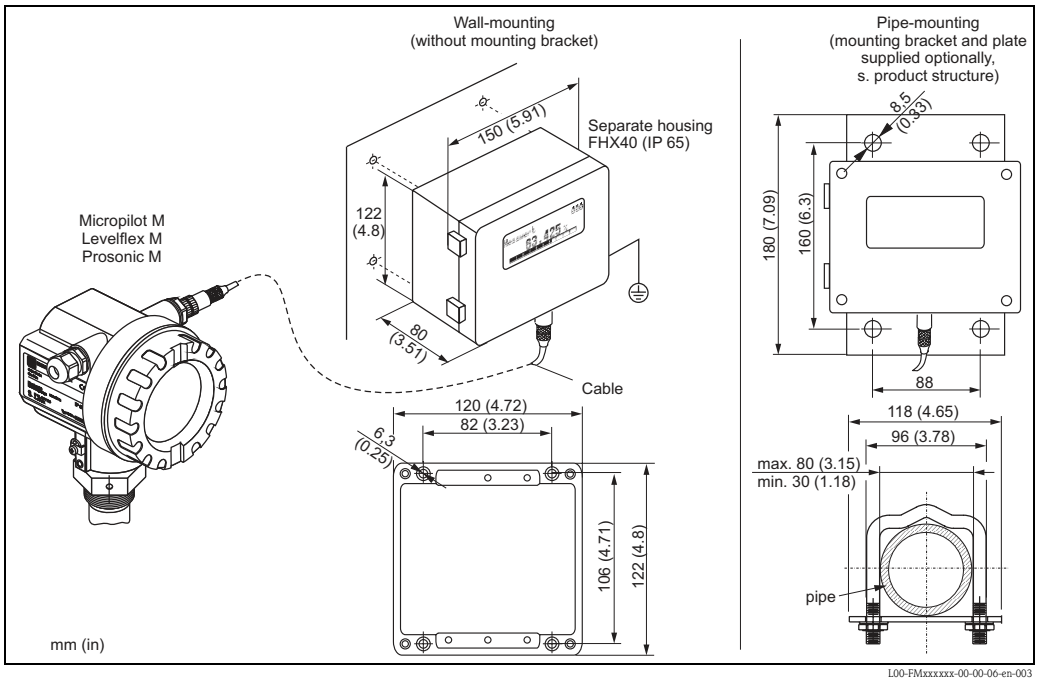

Technical data (cable and housing) and product structure:

Max. cable length	20 m (66 ft)
Temperature range	-30 °C to +70 °C (-22 to +158 °F)
Degree of protection	IP65/67 (housing); IP68 (cable) acc. to IEC 60529
Materials	Housing: AlSi12; cable glands: nickle plated brass
Dimensions [mm (in)]	122x150x80 (4.8x5.9x3.1) / HxWxD

	Approval:					
	A					Non-hazardous area
	1					ATEX II 2 G EEx ia IIC T6, ATEX II 3D
	S					FM IS Cl.I Div.1 Gr.A-D, zone 0
	U					CSA IS Cl.I Div.1 Gr.A-D, zone 0
	N					CSA General Purpose
	K					TIIS Ex ia IIC T6
	C					NEPSI Ex ia IIC T6/T5
	G					IECEx zone1 Ex ia IIC T6/T5
	Y					Special version
		Cable:				
		1				20m/65ft; for HART
		5				20m/65ft; for PROFIBUS PA/FOUNDATION Fieldbus
		9				Special version
			Additional option:			
			A			Basic version
			B			Mounting bracket, pipe 1"/ 2"
			Y			Special version
				Marking:		
				1		Tagging (TAG)
FHX40 -						Complete product designation

For connection of the remote display FHX40 use the cable which fits the communication version of the respective instrument.

8.6 Horn cover for 80 mm (3") and 100 mm (4") horn antenna

8.6.1 Technical data

Materials	
Horn cover	PTFE
Screws	316L
Holding ring	316L
Contact ring	316L
O-ring seal	Silicone
Flat seal	PTFE

Process conditions	
Vessel pressure max.	0.5 bar (7.252 psi)
Process temperature max.	130 °C (266 °F)

8.6.2 Dimensions

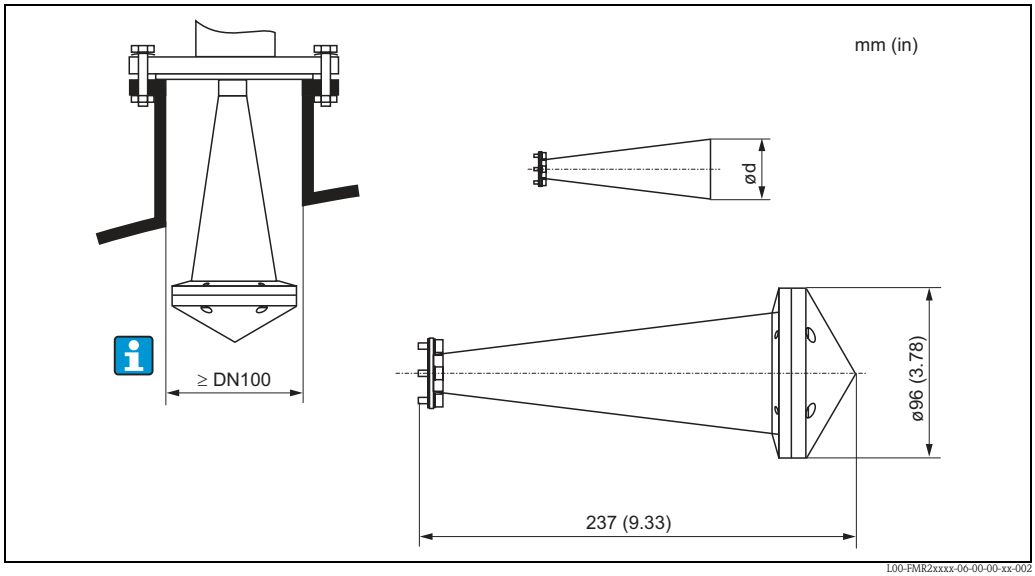

Horn cover for horn antenna 80 mm (3")
- *for antenna diameter d = 75 mm (2.95 in)*
- *for FMR240: antenna variant G, 4*
- *for FMR250: antenna variant D*

Note!
The horn cover is not allowed to use in areas, where explosion proofed equipment is necessary.

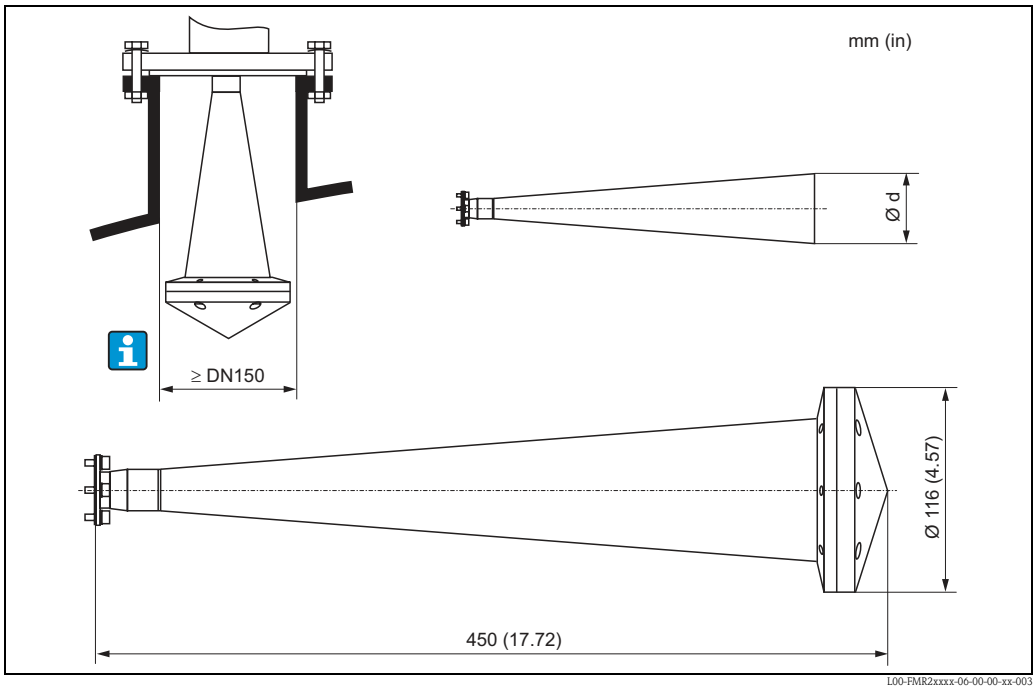

Horn cover for horn antenna 100 mm (4")
– for antenna diameter d = 95 mm (3.74 in)
– for FMR240: antenna variant H, 5
– for FMR250: antenna variant E

Note!
The horn cover is not allowed to use in areas, where explosion proofed equipment is necessary.

8.6.3 Ordering information

Horn antenna	80 mm (3")	100 mm (4")
Order code	71105890	71105889

9 Trouble-shooting

9.1 Trouble-shooting instructions

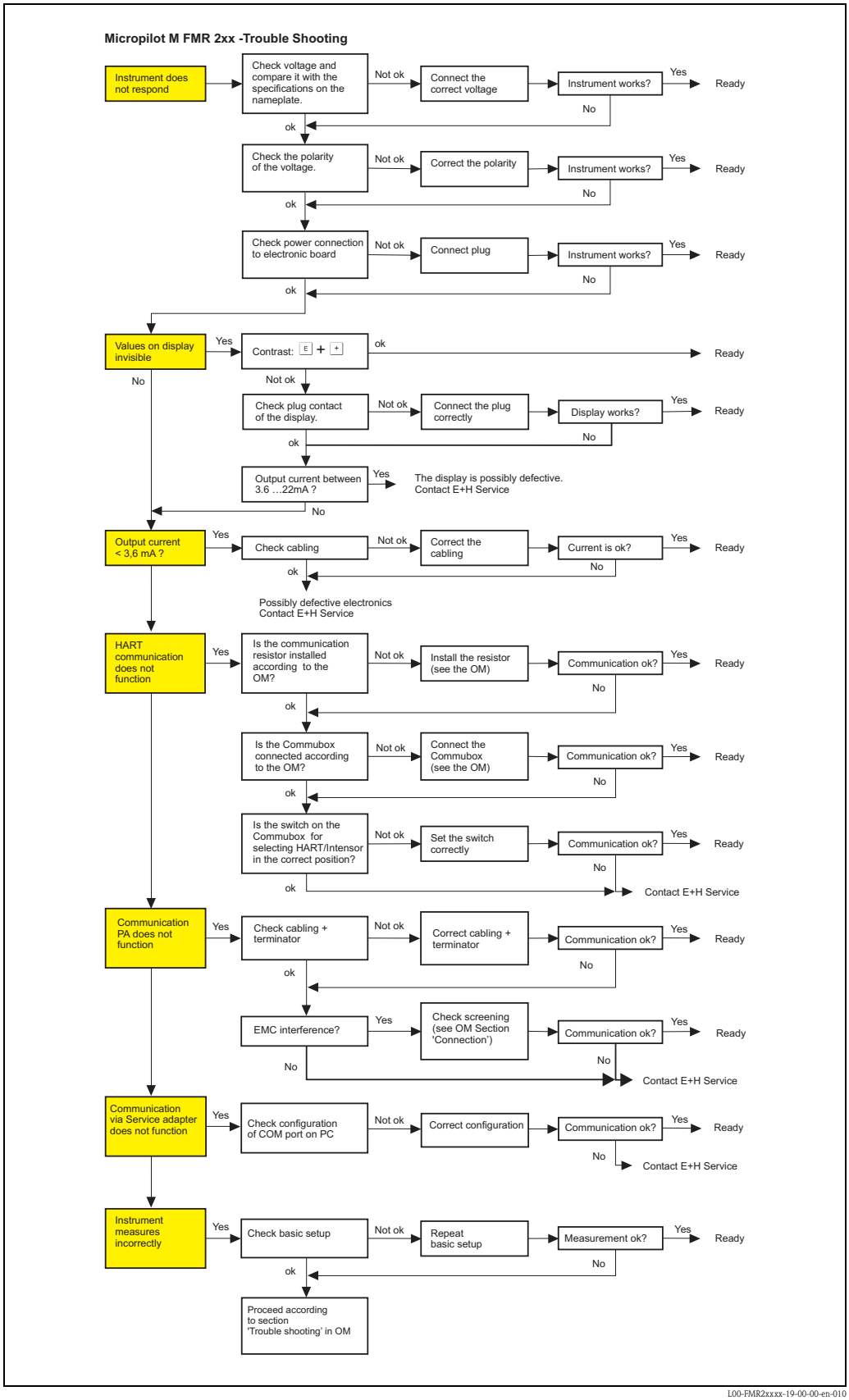

L00-FMR2xxxx-19-00-00-en-010

9.2 System error messages

Code	Description	Possible cause	Remedy
A102	checksum error general reset & new calibr.required	device has been powered off before data could be stored; emc problem; EEPROM defect	reset; avoid emc problem; if alarm prevails after reset, exchange electronics
W103	initialising - please wait	EEPROM storage not yet finished	wait some seconds; if warning prevails, exchange electronics
A106	downloading please wait	processing data download	wait until warning disappears
A110	checksum error general reset & new calibr.required	device has been powered off before data could be stored; emc problem; EEPROM defect	reset; avoid emc problem; if alarm prevails after reset, exchange electronics
A111	electronics defect	RAM defective	reset; if alarm prevails after reset, exchange electronics
A113	electronics defect	RAM defective	reset; if alarm prevails after reset, exchange electronics
A114	electronics defect	EEPROM defect	reset; if alarm prevails after reset, exchange electronics
A115	electronics defect /error power supply	general hardware problem / too low power supply	reset; if alarm prevails after reset, exchange electronics / higher supply voltage
A116	download error repeat download	checksum of stored data not correct	restart download of data
A121	electronics defect	no factory calibration existant; EEPROM defective	contact service
W153	initialising - please wait	initialisation of electronics	wait some seconds; if warning prevails, power off device and power on again
A155	electronics defect	hardware problem	reset; if alarm prevails after reset, exchange electronics
A160	checksum error general reset & new calibr.required	device has been powered off before data could be stored; emc problem; EEPROM defect	reset; avoid emc problem; if alarm prevails after reset, exchange electronics
A164	electronics defect	hardware problem	reset; if alarm prevails after reset, exchange electronics
A171	electronics defect	hardware problem	reset; if alarm prevails after reset, exchange electronics
A231	sensor 1 defect check connection	HF module or electronics defective	exchange HF module or electronics
W511	no factory calibration ch1	factory calibration has been deleted	record new factory calibration
A512	recording of mapping please wait	mapping active	wait some seconds until alarm disappears
A601	linearisation ch1 curve not monotone	linearisation not monotonously increasing	correct linearisation table

Code	Description	Possible cause	Remedy
W611	less than 2 linearisation points for channel 1	number of entered linearisation points < 2	correct linearisation table
W621	simulation ch. 1 on	simulation mode is active	switch off simulation mode
E641	no usable echo channel 1 check calibr.	echo lost due to application conditions or built up on antenna	check installation; optimize orientation of antenna; clean antenna (cf. OM)
E651	level in safety distance - risk of overspill	level in safety distance	alarm will disappear as soon as level leaves safety distance;
E671	linearisation ch1 not complete, not usable	linearisation table is in edit mode	activate linearisation table
W681	current ch1 out of range	current out of range (3.8 mA to 20.5 mA)	check calibration and linearisation

9.3 Application errors in liquids

Error	Output	Possible cause		Remedy
A warning or alarm has occurred	Depending on the configuration	See table of error messages (→ 72)		1. See table of error messages (→ 72)
Measured value (000) is incorrect	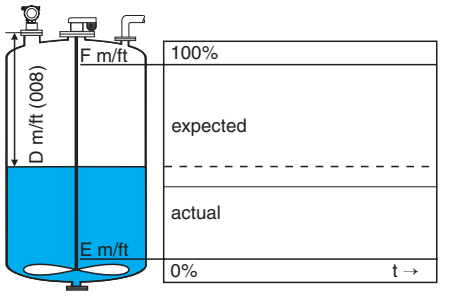	Measured distance (008) OK?	yes →	1. Check empty calibr. (005) and full calibr. (006). 2. Check linearisation: → level/ullage (040) → max. scale (046) → diameter vessel (047) → Check table
		no ↓		
		Measurement in bypass or stilling well?	yes →	1. Is bypass or stilling well selected in tank shape (002)? 2. Is the pipe diameter (007) correct?
		no ↓		
		An interference echo may have been evaluated.	yes →	1. Carry out tank mapping → basic setup
No change off measured value on filling/emptying	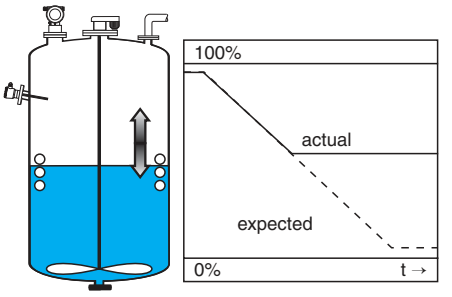	Interference echo from installations, nozzle or extension on the antenna		1. Carry out tank mapping → basic setup 2. If necessary, clean antenna 3. If necessary, select better mounting position

Error	Output	Possible cause		Remedy
If the surface is not calm (e. g. filling, emptying, agitator running), the measured value jumps sporadically to a higher level	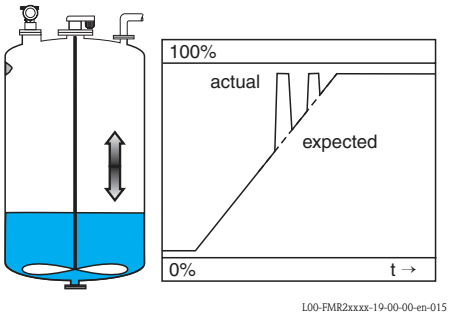 L00-FMR2xxxx-19-00-00-en-015 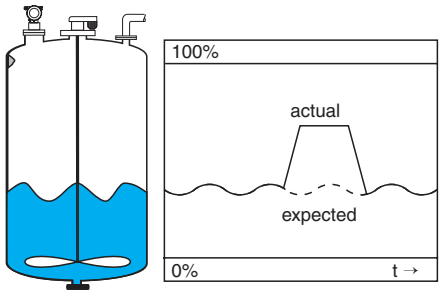 L00-FMR2xxxx-19-00-00-en-016	Signal is weakened by the rough surface – the interference echoes are sometimes stronger		1. Carry out tank mapping → basic setup 2. Set the process cond. (004) to "turb. surface" or "agitator" 3. Increase the output damping (058) 4. Optimise the orientation (→ 77) 5. If necessary, select a better mounting position and/or larger antenna
During filling/ emptying the measured value jumps ownwards	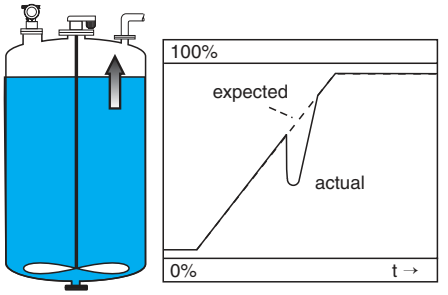 L00-FMR2xxxx-19-00-00-en-017	Multiple echoes	yes →	1. Check the tank shape (002), e. g. "dome ceiling" or "horizontal cyl" 2. In the range of the blocking dist. (059) there is no echo evaluation → Adapt the value 3. If possible, do not select central installation position 4. Perhaps use a stilling well
E641 (loss of echo)	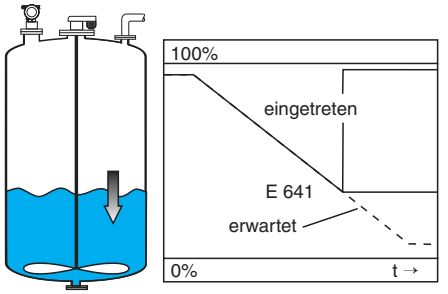 L00-FMR2xxxx-19-00-00-en-018	Level echo is too weak. Possible causes: ■ Rough surface due to filling/ emptying ■ Agitator running ■ Foam	yes →	1. Check application arameters (002), (003) and (004) 2. Optimise alignment (→ 77) 3. If necessary, select a better installation position and/or larger antenna

9.4 Application errors in solids

Error	Output	Possible cause		Remedy
A warning or alarm has occurred	Depending on the configuration	See table of error messages (→ 72)		1. See table of error messages (→ 72)
Measured value (000) is incorrect	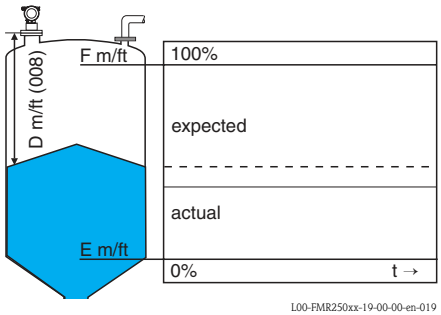	Measured distance (008) OK?	yes →	1. Check empty calibr. (005) and full calibr. (006). 2. Check linearisation: → level/ullage (040) → max. scale (046) → Check table
		no ↓		
		An interference echo may have been evaluated.	yes →	1. Carry out tank mapping → basic setup
No change off measured value on filling/emptying	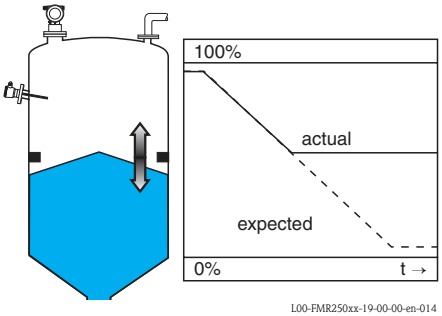	Interference echo from installations, nozzle or build up on the antenna		1. Carry out tank mapping → basic setup 2. If necessary, use top target positioner to aim antenna better to product surface (avoidance of interference echo) (→ 77) 3. If necessary, clean antenna 4. If necessary, select better mounting position
During filling or emptying the measured value jumps sporadically to a higher level	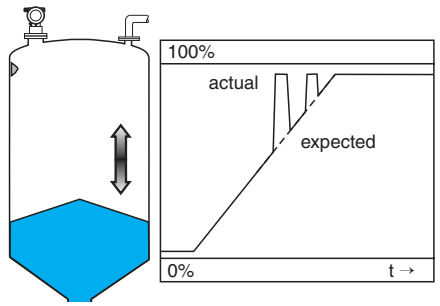	Signal is weakened (e. g. by fluidisation of the surface, extreme dust formation) – the interference echoes are sometimes stronger		1. Carry out tank mapping → basic setup 2. Increase the output damping (058) 3. Optimise the orientation (→ 77) 4. If necessary, select a better mounting position and/or larger antenna
E641 (loss of echo)	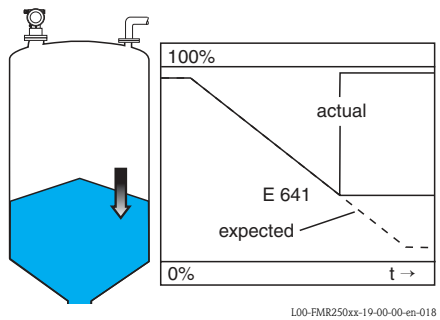	Level echo is too weak. Possible causes: ■ fluidisation of the surface ■ extreme dust formation ■ angle of repose	yes →	1. Check application arameters (00A), (00B) and (00C) 2. Optimise alignment (→ 77) 3. If necessary, select a better installation position and/or larger antenna

9.5 Orientation of the Micropilot

For orientation a marker is found on the flange or threaded boss of the Micropilot. During installation this must be oriented as follows (→ 10):
- In tanks: to the vessel wall
- In stilling wells: to the slots
- In bypass pipes: vertical to the tank connectors

After commissioning the instrument, the echo quality indicates whether a sufficiently large measuring signal is obtained. If necessary, the quality can be optimised later. Vice versa, the presence of an interference echo can be used to minimise this by optimum orientation. The advantage of this is that the subsequent tank mapping uses a somewhat lower level that causes an increase in the strength of the measuring signal.
Proceed as follows:

Warning!
Subsequent alignment can lead to personal injury. Before you unscrew or loosen the process connection, make sure that the vessel is not under pressure and does not contain any injurious substances.

1. It is best to empty the container so that the bottom is just covered. However, alignment can be carried out even if the vessel is empty.
2. Optimisation is best carried out with the aid of the envelope graph in the display or the FieldCare.
3. Unscrew the flange or loosen the threaded boss by a half a turn.
4. Turn the flange by one hole or screw the threaded boss by one eighth of a turn. Note the echo quality.
5. Continue to turn until 360° is reached.
6. Optimum alignment:

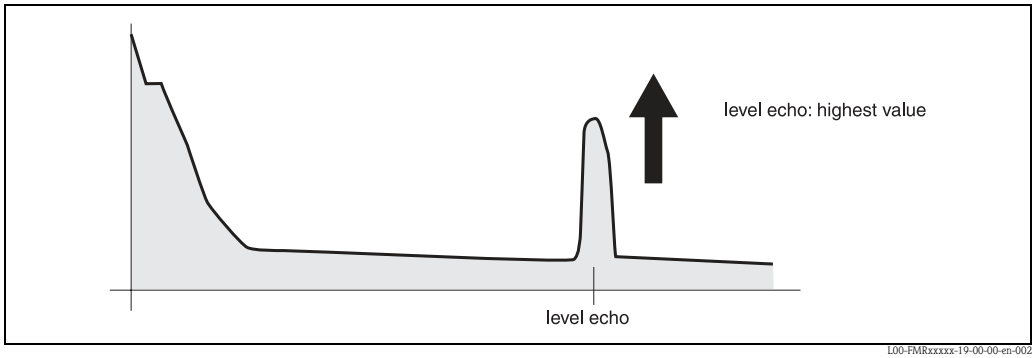

Vessel partly full, no interference echo obtained

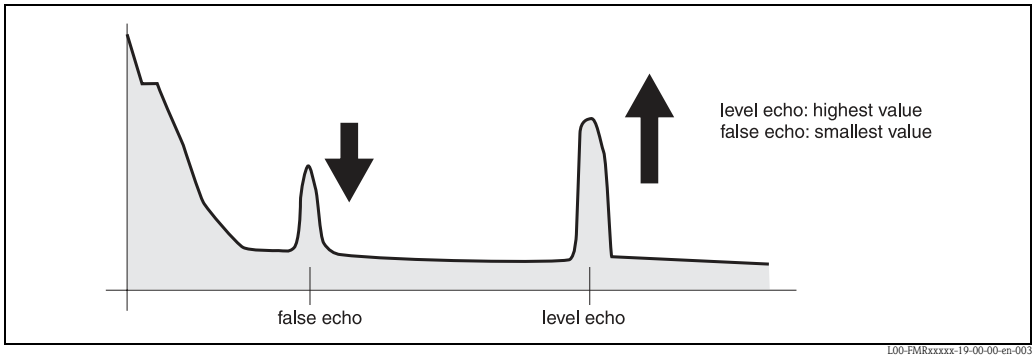

Vessel partly full, interference echo obtained:

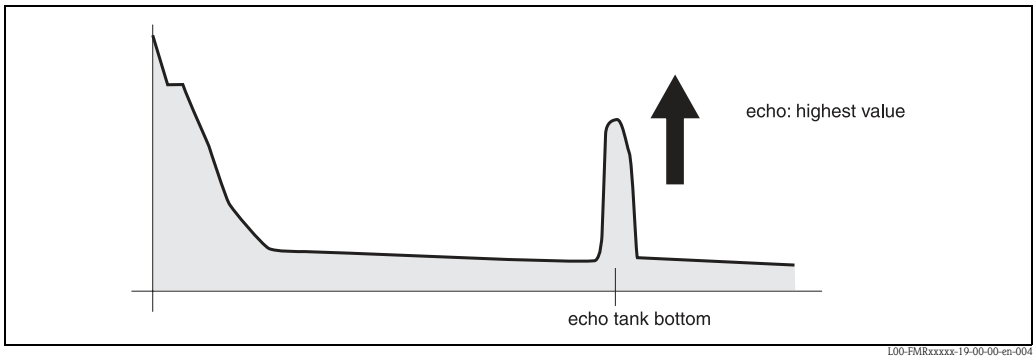

Vessel empty, no interference echo

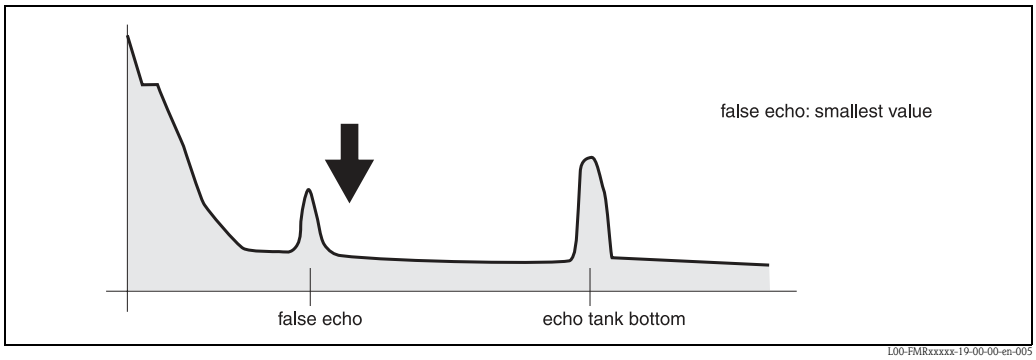

Vessel empty, interference echo obtained

7. Fix the flange or threaded boss in this position. If necessary, replace the seal.
8. Carry out tank mapping, → 56.

9.6 Spare Parts

An overview of the spare parts for your device is available in the internet at www.endress.com. To obtain information on the spare parts, proceed as follows:

1. Go to "www.endress.com" and select your country.
2. Click "Instruments".

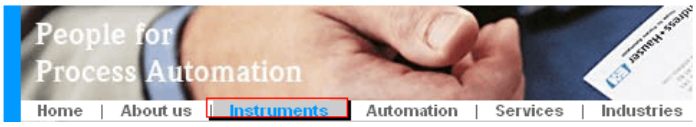

3. Enter the product name into the "product name" field.

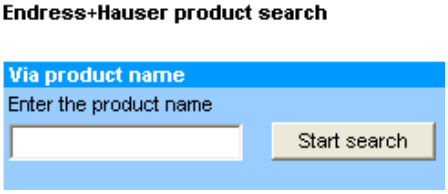

4. Select the device.
5. Click the "Accessories/Spare parts" tab.

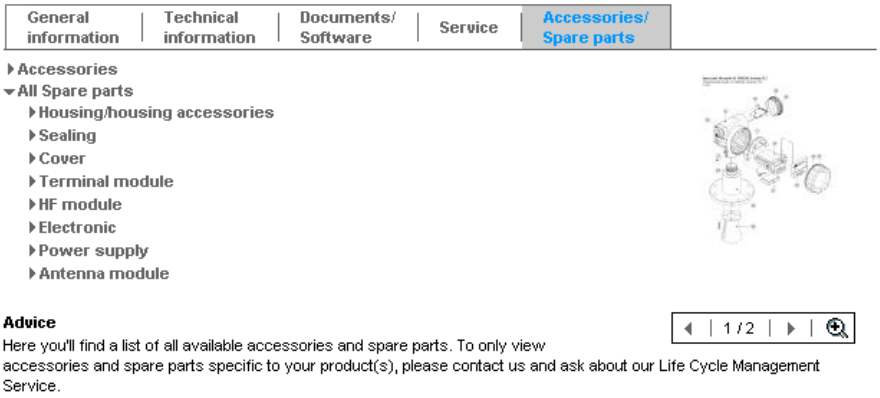

6. Select the required spare parts (You may also use the overview drawing on the right side of the screen.)

When ordering spare parts, always quote the serial number indicated on the nameplate. As far as necessary, the spare parts also include replacement instructions.

9.7 Return

The following procedures must be carried out before a transmitter is sent to Endress+Hauser e. g. for repair or calibration:
- Remove all residue which may be present. Pay special attention to the gasket grooves and crevices where fluid may be present. This is especially important if the fluid is dangerous to health, e. g. corrosive, poisonous, carcinogenic, radioactive, etc.
- Always enclose a duly completed "Declaration of contamination" form (a copy of the “Declaration of contamination” is included at the end of this operating manual). Only then can Endress+Hauser transport, examine and repair a returned device.
- Enclose special handling instructions if necessary, for example a safety data sheet as per EN 91/155/EEC.

Additionally specify:
- An exact description of the application.
- The chemical and physical characteristics of the product.
- A short description of the error that occurred (specify error code if possible)
- Operating time of the device.

9.8 Disposal

In case of disposal please seperate the different components according to their material consistence.

9.9 Software history

Date	Software version	Changes to software	Documentation
12.2000	01.01.00	Original software. Operated via: – ToF Tool from version 1.5 – Commuwin II (from version 2.07-3) – HART communicator DXR275 (from OS 4.6) withRev. 1, DD 1.	BA221F/00/EN/01.01 52006323
05.2002 03.2003	01.02.00 01.02.02	■ Function group: envelope curve display ■ Katakana (japanese) ■ current turn down (HART only) ■ the customer tank map can be edited ■ length of antenna extension FAR10 can be entered directly Operated via: – ToF Tool from version 3.1 – Commuwin II (from version 2.08-1) – HART Field Communicator 375 with Rev. 1, DD 1.	BA221F/00/EN/03.03 52006323
01.2005	01.02.04	Function "echo lost" improved	
03.2006	01.04.00	■ Function: detection windowg Operated via: – ToF Tool from version 4.2 – FieldCare from version 2.02.00 – HART Field Communicator 375 with Rev. 1, DD 1.	BA221F/00/EN/12.05 52006322
10.2006	01.05.00	Support of additional HF modules integrated. ■ Function: media type	BA291F/00/EN/08.06 71030727

9.10 Contact addresses of Endress+Hauser

Contact addresses can be found on our homepage "www.endress.com/worldwide". If you have any questions, please do not hesitate to contact your Endress+Hauser representative.

10 Technical data

10.1 Additional technical data

10.1.1 Input

Measured variable

The measured variable is the distance between a reference point and a reflective surface (i. e. medium surface). The level is calculated based on the tank height entered. The level can be converted into other units (volume, mass) by means of a linearization (32 points).

Operating frequency

K-band
Up to 8 Micropilot M transmitters can be installed in the same tank because the transmitter pulses are statistically coded.

Transmitting power

Distance	Average energy density in beam direction	
	max. measuring range = 20 m (66 ft) / 40 m (131 ft)	measuring range = 70 m (230 ft)
1 m (3.3 ft)	< 12 nW/cm^2	< 64 nW/cm^2
5 m (16 ft)	< 0.4 nW/cm^2	< 2.5 nW/cm^2

10.1.2 Output

Output signal

4 to 20 mA (invertible) with HART protocol

Signal coding

FSK ±0.5 mA over currency signal

Data transmission rate

1200 Baud

Galvanic isolation

Yes (IO-Module)

Signal on alarm

Error information can be accessed via the following interfaces:
- Local display:
  - Error symbol (→ 📄 38)
  - Plain text display
- Current output, signal on error can be selected (e. g. according to NAMUR recommendation NE43).
- Digital interface

Linearization

The linearization function of the Micropilot M allows the conversion of the measured value into any unit of length or volume. Linearization tables for calculating the volume in cylindrical tanks are pre-programmed. Other tables of up to 32 value pairs can be entered manually or semi-automatically.

10.1.3 Auxiliary energy

Ripple HART

47 to 125 Hz: Uss = 200 mV (at 500 Ω)

Max. noise HART

500 Hz to 10 kHz: Ueff = 2.2 mV (at 500 Ω)

10.1.4 Performance characteristics

Reference operating conditions

- Temperature = +20 °C ±5 °C (+68 °F ±41 °F)
- Pressure = 1013 mbar abs. ±20 mbar (15 psi abs. ±0.29 psi)
- Relative humidity (air) = 65 % ±20 %
- Ideal reflector
- No major interference reflections inside the signal beam

Maximum measured error

Typical statements for reference conditions, include linearity, repeatability, and hysteresis:

- **Not** for max. measuring range = 70 m (230 ft)
  - to 1 m (3.3 ft): ± 10 mm (±0.39 in)
- For max. measuring range = 40 m (131 ft)
  - to 10 m (33 ft): ± 3 mm (±0.12 in)
  - ex 10 m (33 ft): ± 0.03 % of measuring range
- For max. measuring range = 70 m (230 ft)
  - to 1 m (3.3 ft): ± 30 mm (±1.18 in)
  - ex 1 m (3.3 ft): ± 15 mm (±0.59 in) or 0.04 % of measuring range, whatever is larger

Resolution

Digital / analog in % 4 to 20 mA: 1mm (0.04 in) / 0.03 % of measuring range.

Reaction time

The reaction time depends on the parameter settings (min. 1 s). In case of fast level changes, the instrument needs the reaction time to indicate the new value.

Influence of ambiente temperature

The measurements are carried out in accordance with EN61298-3:

- Digital output HART:
  - average T_K: 2 mm (0.08 in) /10 K, max. 5 mm (0.2 in) over the entire temperature range -40 °C to +80 °C (-40 to +176 °F)
- Current output (additional error, in reference to the span of 16 mA):
  - **Zero point (4 mA)**
    average T_K: 0,03 %/10 K, max. 0,45 % over the entire temperature range -40 °C to +80 °C (-40 to +176 °F)
  - **Span (20 mA)**
    average T_K: 0,09 %/10 K, max. 0,95 % over the entire temperature range -40 °C to +80 °C (-40 to +176 °F)

Effect of gas phase

High pressures reduce the propagation velocity of the measuring signals in the gas/vapor above the fluid. This effect depends on the gas/vapor and is particularly large for low temperatures. This results in a measuring error that gets bigger as the distance increases between the device zero point (flange) and product surface. The following table illustrates this measured error for a few typical gases/vapors (with regard to the distance; a positive value means that too large a distance is being measured):

Gas phase	Temperature		Pressure				
	°C	°F	1 bar (14.5 psi)	10 bar (145 psi)	50 bar (725 psi)	100 bar (1450 psi)	160 bar (2320 psi)
Air Nitrogen	20	68	0.00 %	0.22 %	1.2 %	2.4 %	3.89 %
	200	392	-0.01 %	0.13 %	0.74 %	1.5 %	2.42 %
	400	752	-0.02 %	0.08 %	0.52 %	1.1 %	1.70 %
Hydrogen	20	68	-0.01 %	0.10 %	0.61 %	1.2 %	2.00 %
	200	392	-0.02 %	0.05 %	0.37 %	0.76 %	1.23 %
	400	752	-0.02 %	0.03 %	0.25 %	0.53 %	0.86 %

Gas phase	Temperature		Pressure				
	°C	°F	1 bar (14.5 psi)	10 bar (145 psi)	50 bar (725 psi)	100 bar (1450 psi)	160 bar (2320 psi)
Water (saturated steam)	100	212	0.20 %	—	—	—	—
	180	356	—	2.1 %	—	—	—
	263	505	—	—	8.6 %	—	—
	310	590	—	—	—	22 %	—
	364	687	—	—	—	—	41.8 %

Note!
When the pressure is known and constant, this measured error can, for example, be compensated by means of linearization.

10.1.5 Operating conditions: Environment

Ambient temperature range

Ambient temperature for the transmitter: -40 °C to +80 °C (-40 °Ft o +176 °F) resp. on request -50 °C to +80 °C (-58 °F to +176 °F). The functionality of the LCD display may be limited for temperatures Ta < -20 °C (-4 °F) and Ta > +60 °C (+140 °F). A weather protection cover should be used for outdoor operation if the instrument is exposed to direct sunlight.

Storage temperature

-40 °C to +80 °C (-40 °F to +176 °F) or -50 °C to +80 °C (-58 °F to +176 °F).

Climate class

DIN EN 60068-2-38 (test Z/AD)

Vibration resistance

DIN EN 60068-2-64 / IEC 68-52-64:

- FMR230/231, FMR240/244/245 with 40 mm (1½") antenna:
  20 to 2000 Hz, 1 $(m/s^2)^2/Hz$

Cleaning of the antenna

The antenna can get contaminated, depending on the application. The emission and reception of microwaves can thus eventually be hindered. The degree of contamination leading to an error depends on the medium and the reflectivity, mainly determined by the dielectric constant εr. If the medium tends to cause contamination and deposits, cleaning on a regular basis is recommended. Care has to be taken not to damage the antenna in the process of a mechanical or hose-down cleaning (eventually connection for cleaning liquid). The material compatibility has to be considered if cleaning agents are used! The maximum permitted temperature at the flange should not be exceeded.

Electromagnetic compatibility

- Electromagnetic compatibility in accordance with all the relevant requirements of the EN61326 series and NAMUR recommendation (NE21). For details refer to the Declaration of Conformity. Maximum deviation < 0.5 % of the span.
- A standard installation cable is sufficient if only the analogue signal is used. Use a screened cable when working with a superimposed communications signal (HART).

10.1.6 Operating conditions: Process

Process temperature range / Process pressure limits

Note!
The specific range may be reduces by the selected process condition. The pressure rating (PN) specified on the flanges refers to a reference temperature of 20 °C (68 °F), for ASME flanges to 100 °F. Observe pressure temperature dependency.
The pressure values permitted at higher temperatures can be found in the following standards:

- EN1092-1: 2001 Tab. 18
  With regard to their temperature stability properties, the materials 1.4404 and 1.4435 are grouped under 13E0 in EN1092-1 Tab. 18. The chemical composition of the two materials can be identical.
- ASME B16.5a - 1998 Tab. 2-2.2 F316
- ASME B16.5a - 1998 Tab. 2.3.8 N10276
- JIS B 2220

Type of antenna		Seal	Temperature	Pressure	Wetted parts
V	Standard	FKM Viton	-20 °C to +150 °C (-4 °F to +302 °F)	-1 to 40 bar (to 580 psi)	PTFE, seal, 316L resp. Alloy C22
E	Standard	FKM Viton GLT	-40 °C to +150 °C (-40 °F to +302 °F)		
K	Standard	Kalrez (Spectrum 6375)	-20 °C to +150 °C (-4 °F to +302 °F)		

↑ see ordering structure, → 🖹 7

Dielectric constant

- in a stilling well: $\varepsilon r \geq 1{,}4$
- in free space: $\varepsilon r \geq 1{,}9$

10.1.7 Mechanical construction

Weight

- F12/T12 housing: approx 4 kg (8.82 lbs) + weight of flange
- F23 housing: approx 7.4 kg (16.32 lbs) + weight of flange

Material
(not in contact with process)

Materials of T12 and F12 housing (seawater-resistant, powder-coated)

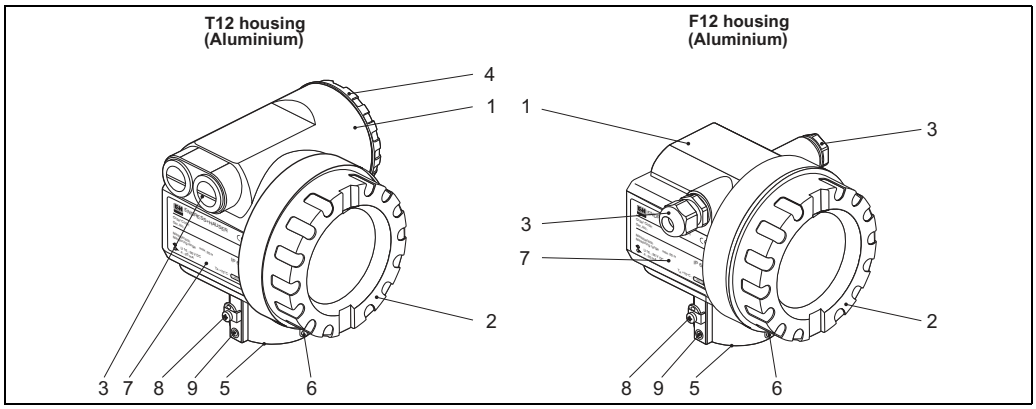

Pos.	Part	Material	
1	T12 and F12 housing	AlSi10Mg	
2	Cover (Display)	AlSi10Mg	
	Sealing	Fa. SHS: EPDM 70pW FKN	
	Window	ESG-K-Glass (Toughened safety glass)	
	Sealing of the glass	Silicone sealing compound Gomastit 402	
3	Sealing	Fa. SHS: EPDM 70 pW FKN	Trelleborg: EPDM E7502
	Cable gland	Polyamid (PA), CuZn nickel-plated	
	Plug	PBT-GF30	1.0718 galvanized
		PE	3.1655
	Adapter	316L (1.4435)	AlMgSiPb (anodized)
4	Cover (Connection compartment)	AlSi10Mg	
	Sealing	Fa. SHS: EPDM 70pW FKN	Trelleborg: EPDM E7502/E7515
	Clamp	Screws: A4; Clamp: Ms nickel-plated; Spring washer: A4	
5	Sealing ring	Fa. SHS: EPDM 70pW FKN	Trelleborg: EPDM E7502/E7515
6	Retaining ring for tag	VA	
	Rope	VA	
	Crimp sleeve	Aluminium	
7	Nameplate	1.4301	
	Groove pin	A2	
8	Ground terminal:	Screws: A2; Spring washer: A4; Clamp: 1.4301 Holder: 1.4310	
9	Screws	A2-70	

Materials of F23 housing (corrosion-resistant)

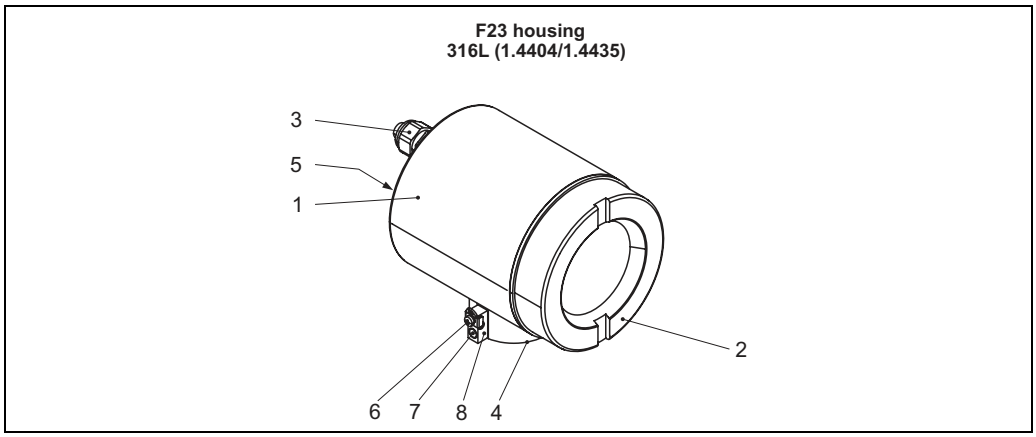

Pos.	Part	Material	
1	F23 housing	Housing body: 1.4404; Sensor neck: 1.4435; earth connection block: 1.4435	
2	Cover	1.4404	
	Sealing	Fa. SHS: EPDM 70pW FKN	
	Window	ESG-K-Glass (Toughened safety glass)	
	Sealing of the glass	Silicone sealing compound Gomastit 402	
3	Sealing	Fa. SHS: EPDM 70pW FKN	Trelleborg: EPDM E7502
	Cable gland	Polyamid (PA), CuZn nickel-plated	
	Plug	PBT-GF30	1.0718 galvanized
		PE	3.1655
	Adapter	316L (1.4435)	
4	Sealing ring	Fa. SHS: EPDM 70pW FKN	Trelleborg: EPDM E7502
5	Nameplate	1.4301	
6	Grounding terminal:	Screws: A2; Spring washer: A4; Clamp: 1.4301; Holder: 1.4310	
7	Screw	A2-70	
8	Retaining ring for tag	VA	
	Rope	VA	
	Crimp sleeve	Aluminium	

Material
(in contact with process)

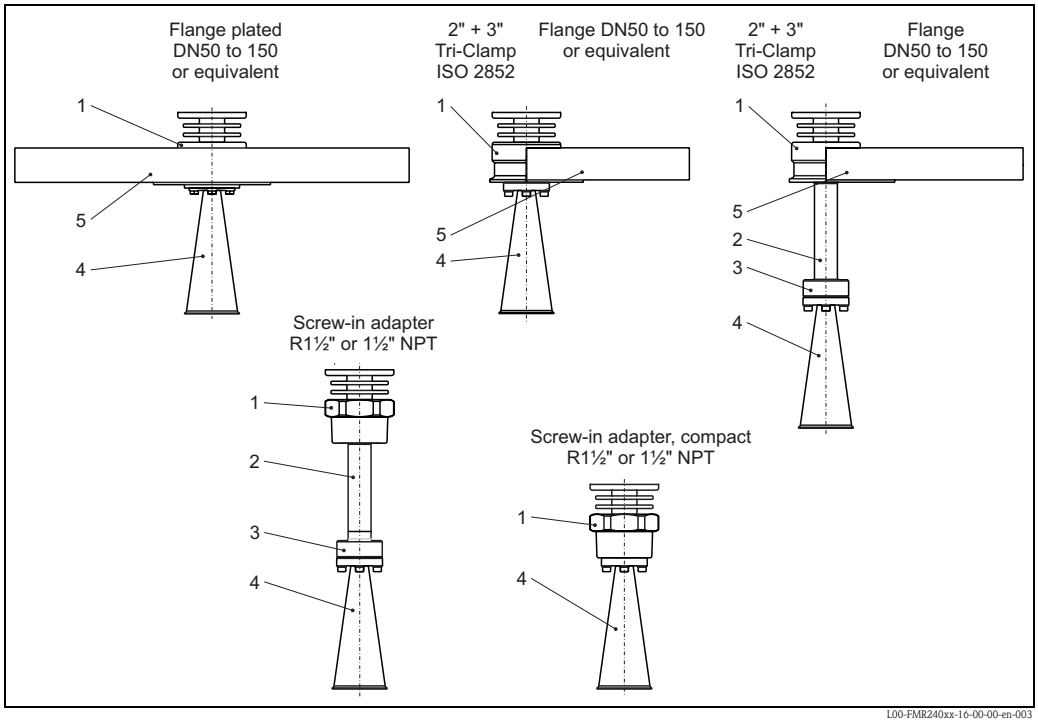

Pos.	Part	Material	
1	Adapter	316L (1.4404)	
	Mounting plate		
2	Pipe extension	316L (1.4404)	
3	Process adapter extension	316L (1.4404)	
	Mounting plate		
4	Horn	316L (1.4404)	Hastelloy C22
	Screws	A4	Hastelloy C22
	Spring washer	A4	
5	Flange	316L (1.4404) optional Hastelloy C22 plated	

10.1.8 Certificates and approvals

CE approval	The measuring system meets the legal requirements of the EC-guidelines. Endress+Hauser confirms the instrument passing the required tests by attaching the CE-mark.
RF approvals	R&TTE, FCC
Overspill protection	German WHG, see ZE244F/00/DE. SIL 2, see SD150F/00/EN "Functional Safety Manual".
External standards and guidelines	**EN 60529** Protection class of housing (IP-code). **EN 61010** Safety regulations for electrical devices for measurement, control, regulation and laboratory use. **EN 61326-X** EMC product family standard for electrical equipment for measurement, control and laboratory use. **NAMUR** User association for automation technology in process industries.
Marine certificate	GL (German Lloyd), ABS, NK – HART – not HT antenna

Ex approval

Correlation of safety instruction (XA, XC) and certificates (ZD, ZE) to the instrument:

Feature		Variant	ZE244F	ZD135F	ZD134F	ZD133F	ZD132F	ZD129F	ZD128F	ZD127F	ZD126F	ZD021F	ZD062F	ZD060F	ZD059F	ZD058F	ZD056F	ZD055F	XC007F	XA406F	XA373F	XA371F	XA370F	XA368F	XA366F	XA364F	XA362F	XA357F	XA356F	XA354F	XA277F	XA233F	XA208F	XA207F	XA204F	XA203F	XA102F	XA101F	XA100F	XA099F
10 Approval:	Non-hazardous area	A																																					
	ATEX II 1/2G, II 1/2D, Alu blind cover, ATEX II 1/2G Ex ia IIC T6, ATEX II 1/2D	B																		X																				
	IECEx Zone 0/1, Ex ia IIC T6	D																						X	X	X	X	X		X										
	IECEx Zone 0/1, Ex d (ia) IIC T6	E																											X											
	Non-hazardous area, WHG [1]	F	X																																					
	ATEX II 3G Ex nA II T6	G																													X									
	ATEX II 1/2G Ex ia IIC T6, ATEX II 3D	H																												X		X	X	X	X	X			X
	NEPSI Ex ia IIC T6	I																			X		X																
	NEPSI Ex d(ia)ia IIC T6	J																				X																	
	TIIS Ex d (ia) IIC T4	L																																					
	CSA General Purpose	N																																					
	NEPSI Ex nAL IIC T6	R																	X																				
	FM IS Cl.I Div.1 Gr.A-D, zone 0, 1, 2	S						X	X	X	X	X				X	X																						
	FM XP Cl.I Div.1 Gr.A-D, zone 1, 2	T													X																								
	CSA IS Cl.I Div.1 Gr.A-D, zone 0, 1, 2	U		X	X	X	X							X	X																								
	CSA XP Cl.I Div.1 Gr.A-D, zone 1, 2	V											X																										
	Special version	Y																																					
	ATEX II 1/2G Ex ia IIC T6	1																															X	X	X	X	X		X
	ATEX II 1/2G Ex em (ia) IIC T6	3																																				X	
	ATEX II 1/2G Ex d (ia) IIC T6	4																																			X		
	ATEX II 1/2G Ex ia IIC T6, WHG	6	X																														X	X	X	X	X		X
	ATEX II 1/2G Ex em (ia) IIC T6, WHG	8	X																																			X	
60 Output; Operation:	4-20mA SIL HART, 4-line display VU331 [2]	A	X			X	X			X	X		X		X	X		X	X		X	X	X	X			X	X	X	X		X		X		X	X	X
	4-20mA SIL HART, w/o display [3]	B	X			X	X			X	X		X		X	X		X	X		X	X	X	X			X	X	X	X		X		X		X	X	X
	PROFIBUS PA, 4-line display VU331 [2]	C	X	X	X			X	X			X	X	X		X	X		X	X	X				X	X	X	X		X	X	X		X		X	X	X
	PROFIBUS PA, w/o display [3]	D	X	X	X			X	X			X	X	X		X	X		X	X	X				X	X	X	X		X	X	X		X		X	X	X
	FOUNDATION Fieldbus, 4-line display [2]	E		X	X			X	X			X	X	X		X	X		X	X	X				X	X	X	X		X	X	X		X		X	X	X
	FOUNDATION Fieldbus, w/o display [3]	F		X	X			X	X			X	X	X		X	X		X	X	X				X	X	X	X		X	X	X		X		X	X	X
	4-20mA SIL HART, prepared for FHX40	K	X				X				X				X			X	X		X		X		X				X	X	X	X				X			X
	PROFIBUS PA, prepared for FHX40	L	X			X			X			X		X			X		X	X	X					X	X	X		X	X		X		X			
	FOUNDATION Fieldbus, prepared for FHX40	M				X			X			X		X			X		X	X	X					X	X	X		X	X		X		X			
	Special version	Y																																					
70 Housing:	F12 Alu, coated IP65 NEMA4X	A										X		X	X		X	X	X	X		X				X		X	X	X				X				X
	F23 316L IP65 NEMA4X	B			X		X		X		X	X							X	X	X		X		X		X			X	X			X	X			
	T12 Alu, coated IP65 NEMA4X [4]	C											X			X						X						X										X	X
	T12 Alu, coated IP65 NEMA4X + OVP [4,5]	D		X		X		X		X		X							X	X	X		X	X		X				X	X	X	X					

1) German WHG only in combination with certificate ZE244F/00/EN.
2) Envelope curve display on site.
3) Via communication.
4) Separate conn. compartment.

10.1.9 Supplementary Documentation

Supplementary Documentation

This supplementary documentation can be found on our product pages on www.endress.com.
- Technical Information (TI345F/00/EN)
- Operating Instructions "Description of instrument functions" (BA291F/00/EN)
- Safety Manual "Functional Safety Manual" (SD150F/00/EN)
- Certificate "German WHG" (ZE244F/00/DE)
- Brief operating instructions (KA1006F/00/DE)

11 Appendix

11.1 Operating menu HART

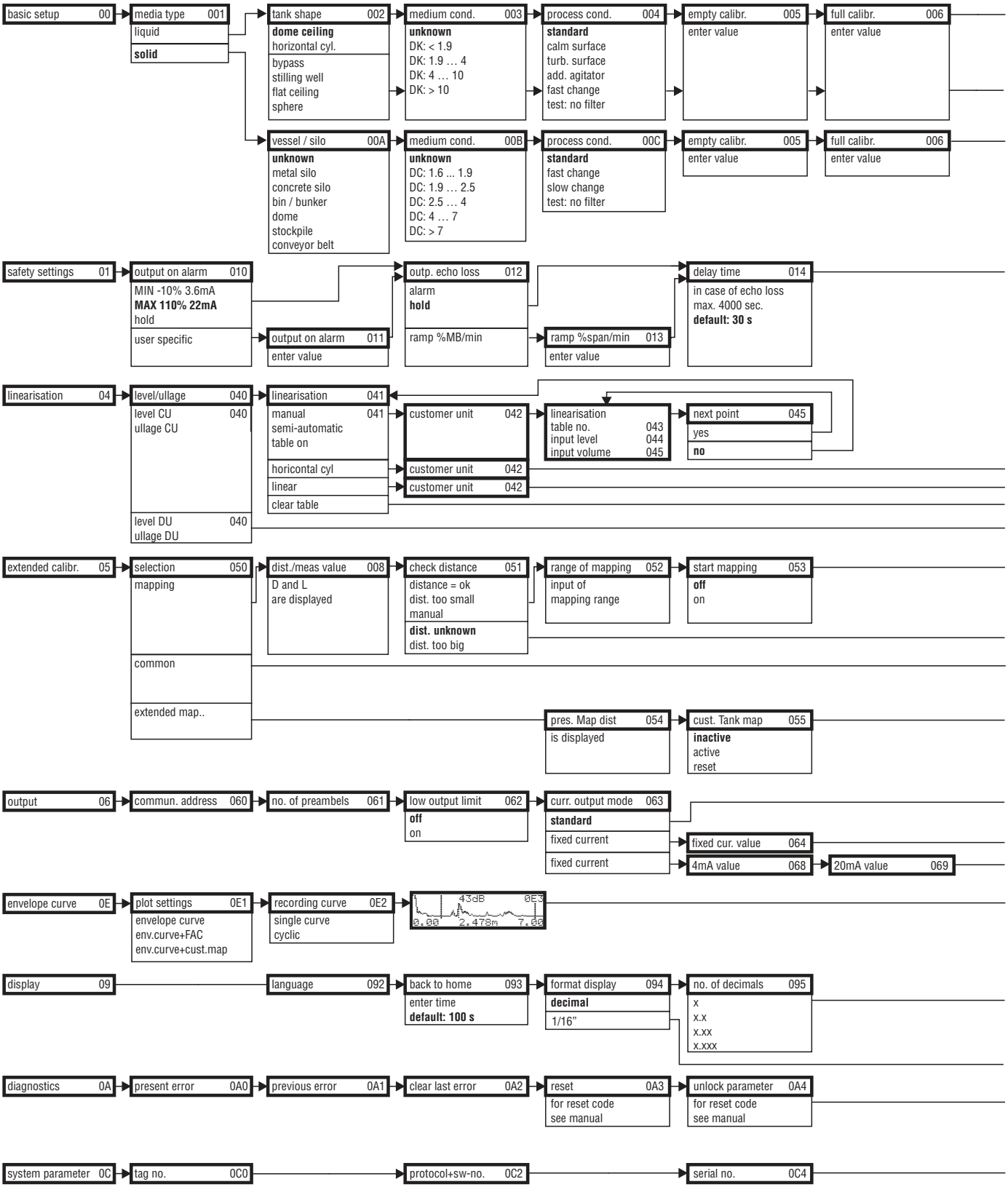

Note! The default values of the parameters are typed in boldface.

L00-FMR250xx-19-00-01-en-036

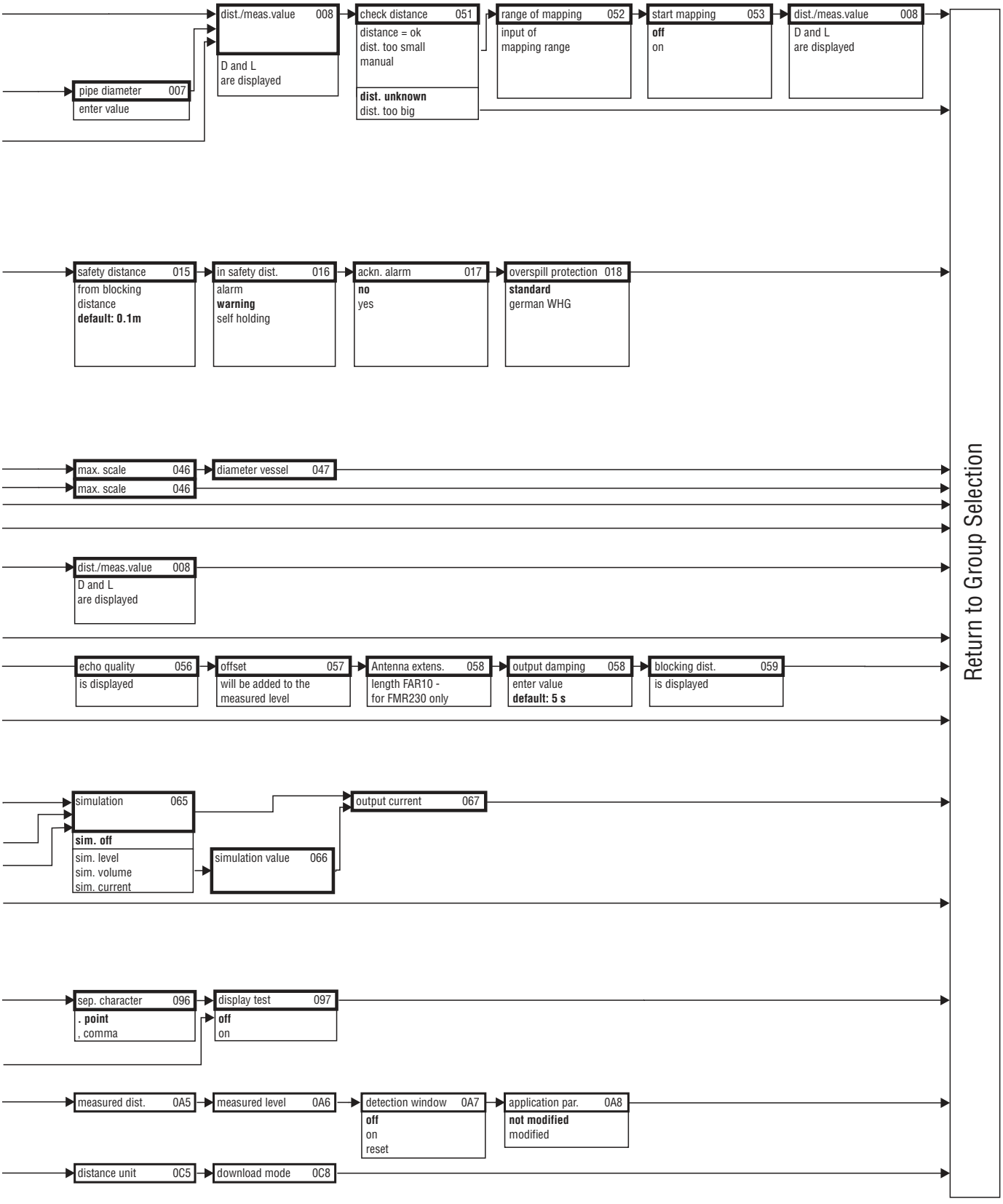

L00-FMR250xx-19-00-02-en-036

11.2 Patents

This product may be protected by at least one of the following patents.
Further patents are pending.

- US 5,387,918 ≙ EP 0 535 196
- US 5,689,265 ≙ EP 0 626 063
- US 5,659,321
- US 5,614,911 ≙ EP 0 670 048
- US 5,594,449 ≙ EP 0 676 037
- US 6,047,598
- US 5,880,698
- US 5,926,152
- US 5,969,666
- US 5,948,979
- US 6,054,946
- US 6,087,978
- US 6,014,100

Index

A
accessories 67
alarm 43
antenna size 12
application errors in liquids 74
application errors in solids 76

B
basic setup 48, 50, 62
beam angle 16
bypass 26, 55

C
CE mark 9
commissioning 47
Commubox 33, 67
connecting 31
connection 33–34

D
declaration of conformity 9
declaration of contamination 80
degree of protection 34
designated use 4
dielectric constant 19, 51, 53
dimensions 12
display 38, 50, 59
disposal 80
distance 48, 56

E
echo mapping 57
echo quality 77–78
empty calibration 48, 54, 63
engineering hints 14
envelope curve 59, 64
equipotential bonding 34
error messages 43
Ex approval 89
exterior cleaning 66

F
F12 housing 29, 31
F23 housing 29
FHX40 68–69
Field Communicator 375, 475 33
FieldCare 44–45
full calibration 48, 55, 63
function groups 36
functions 36
FXA191 33

H
handheld Field Communicator 375, 475 44
HART 31, 33, 44

I
installation in bypass 26
installation in stilling well 10, 24
installation in tank 10, 22
interference echo 77
interference echoes 56

K
key assignment 39

L
level 48
lock 40–41

M
maintenance 66
mapping 56–57, 64
maximum measured error 82
Measurement in a plastic tank 15
measuring conditions 17–18
media group 53
media type 62
Mediengruppe 19
medium property 51, 53, 63
mounting 10

N
nameplate 6
notes on safety conventions and symbols 5

O
operatin menu 90
operating menu 36
operation 35, 40
operation menu 35
operational safety 4
optimisation 77
ordering structure 7
orientation 10, 77

P
pipe diameter 55
process conditions 52, 54
product class 19

R
repairs 66
repairs to Ex-approved devices 66
replacement 66
replacing seals 66
Reset 42
return 80
RF approvals 88
RMA422 33
RN221N 33

S

safety distance 48
safety instructions and process safety 4
Service Interface FXA291 67
software history 80
Spare Parts 79
stilling well 24, 55
stilling wells 25
system error messages 72

T

T12 housing 30–31
tank installations 14
tank shape 50–51
technical data 81
terminal compartment 31
trouble-shooting 71
trouble-shooting instructions 71
turn housing 10, 28

U

unlock parameter 40–41

V

vessel / silo 53, 63

W

warning 43
weather protection cover 67
wiring 29

Endress+Hauser

People for Process Automation

Declaration of Hazardous Material and De-Contamination

Erklärung zur Kontamination und Reinigung

RA No. ☐☐☐☐☐☐☐☐

Please reference the Return Authorization Number (RA#), obtained from Endress+Hauser, on all paperwork and mark the RA# clearly on the outside of the box. If this procedure is not followed, it may result in the refusal of the package at our facility.

Bitte geben Sie die von E+H mitgeteilte Rücklieferungsnummer (RA#) auf allen Lieferpapieren an und vermerken Sie diese auch außen auf der Verpackung. Nichtbeachtung dieser Anweisung führt zur Ablehnung ihrer Lieferung.

Because of legal regulations and for the safety of our employees and operating equipment, we need the "Declaration of Hazardous Material and De-Contamination", with your signature, before your order can be handled. Please make absolutely sure to attach it to the outside of the packaging.

Aufgrund der gesetzlichen Vorschriften und zum Schutz unserer Mitarbeiter und Betriebseinrichtungen, benötigen wir die unterschriebene "Erklärung zur Kontamination und Reinigung", bevor Ihr Auftrag bearbeitet werden kann. Bringen Sie diese unbedingt außen an der Verpackung an.

Type of instrument / sensor
Geräte-/Sensortyp _____

Serial number
Seriennummer _____

☐ **Used as SIL device in a Safety Instrumented System /** *Einsatz als SIL Gerät in Schutzeinrichtungen*

Process data/ *Prozessdaten*
Temperature / *Temperatur* _____ [°F] _____ [°C]
Pressure / *Druck* _____ [psi] _____ [Pa]
Conductivity / *Leitfähigkeit* _____ [µS/cm]
Viscosity / *Viskosität* _____ [cp] _____ [mm^2/s]

Medium and warnings
Warnhinweise zum Medium



	Medium /concentration *Medium /Konzentration*	Identification CAS No.	flammable *entzündlich*	toxic *giftig*	corrosive *ätzend*	harmful/ irritant *gesundheits-schädlich/ reizend*	other * *sonstiges**	harmless *unbedenklich*
Process medium / *Medium im Prozess*								
Medium for process cleaning / *Medium zur Prozessreinigung*								
Returned part cleaned with / *Medium zur Endreinigung*								

* explosive; oxidising; dangerous for the environment; biological risk; radioactive
* *explosiv; brandfördernd; umweltgefährlich; biogefährlich; radioaktiv*

Please tick should one of the above be applicable, include safety data sheet and, if necessary, special handling instructions.
Zutreffendes ankreuzen; trifft einer der Warnhinweise zu, Sicherheitsdatenblatt und ggf. spezielle Handhabungsvorschriften beilegen.

Description of failure / *Fehlerbeschreibung* _____

_____

_____

Company data / *Angaben zum Absender*

Company / *Firma* _____

_____

Address / *Adresse*

_____

_____

Phone number of contact person / *Telefon-Nr. Ansprechpartner:*

_____

Fax / E-Mail _____

Your order No. / *Ihre Auftragsnr.* _____

"We hereby certify that this declaration is filled out truthfully and completely to the best of our knowledge.We further certify that the returned parts have been carefully cleaned. To the best of our knowledge they are free of any residues in dangerous quantities."

"Wir bestätigen, die vorliegende Erklärung nach unserem besten Wissen wahrheitsgetreu und vollständig ausgefüllt zu haben. Wir bestätigen weiter, dass die zurückgesandten Teile sorgfältig gereinigt wurden und nach unserem besten Wissen frei von Rückständen in gefahrbringender Menge sind."

_____ (place, date / *Ort, Datum*)

_____ Name, dept./ *Abt.* (please print / *bitte Druckschrift*)

_____ Signature / *Unterschrift*

www.endress.com/worldwide

Endress+Hauser

People for Process Automation

BA220F/00/EN/03.10
71112090
CCS/FM+SGML 6.0 ProMoDo

71112090