FLOWSIC600

Reliable flowmeter for process applications

Gas flowmeters for custody transfer traffic and process applications

- Long-term stability, reliable measurement
- Low maintenance due to intelligent self-diagnostics
- Virtually immune to pressure regulator noise
- Ultrasonic transducers can be exchanged under operating pressure
- Wide application range



Endress+Hauser

People for Process Automation

Tailored solutions for a wide application range

Reliable and efficient measurement of process gases

Gas measurement is crucial in all industries. FLOWSIC600 is an ultrasonic gas flowmeter that is ideal for reliable measurement of process gases across industries from traditional to future applications. It features a robust meter body incorporating state of the art transducer, ensures measurement with high noise immunity and long-term stability, and is nearly maintenance-free.

As FLOWSIC600 uses ultrasonic measurement and operates without mechanically moving parts, making it largely resistant to contamination and wear. The result is maximum measurement reliability even under adverse measurement conditions such as moisture, ice, cold, heat, desert sand and aggressive media proven over 20 years of field experience.

Broad application range

The FLOWSIC600 is available for the following gases: CO_2, H_2, O_2, N_2, Air, NH_3, Ar, He, CH_4, C_2H_4 with high turn down ratio.







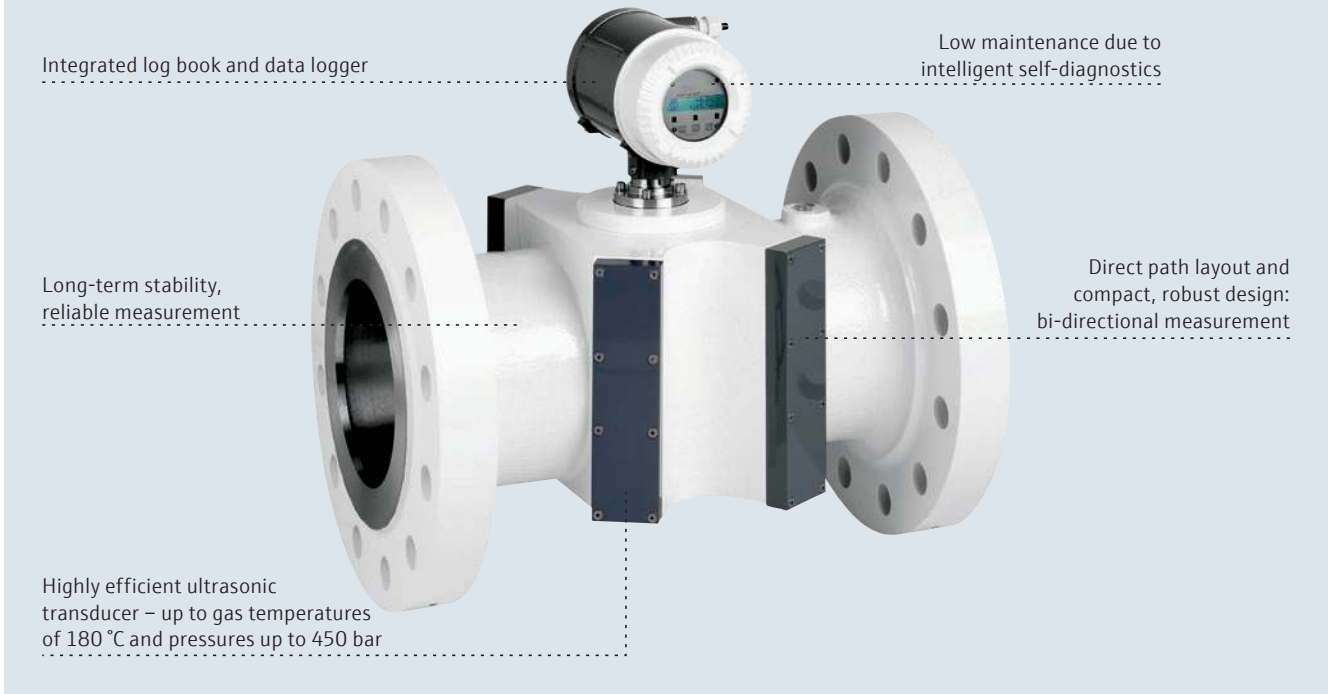

Highly durable

The FLOWSIC600 compact gas flowmeter hermetically shields all of its measurement equipment from the environment. The use of internal cable routing prevents harsh climate conditions and contamination from harming the device. The FLOWSIC600 is virtually maintenance-free.

High measurement accuracy

The FLOWSIC600 measures gas flow using ultrasonic technology. The arrangement of the ultrasonic sensors in the measurement device (path layout) matches its performance parameters perfectly. With the FLOWSIC600, we developed ultrasonic sensors designed for maximum immunity to noise.

Maximum reliability

The FLOWSIC600 uses ultrasonic measurement and operates without mechanically moving parts making it largely resistant to contamination and wear. The result is maximum measurement reliability even under adverse measurement conditions.

Excellent system integration

The FLOWSIC600 is available for nominal pipe sizes from DN50 (2") to DN600 (24"). It features HART protocol connection.

Gas quality

Real time speed of sound measurement provides information on gas composition.

Low power consumption

Our ultrasonic sensors combine high performance with low power consumption. Due to low power consumption, it is possible to use a stand-alone power supply, such as a solar module.

The FLOWSIC600 is available in two types

Compact – deal for custody transfer applications

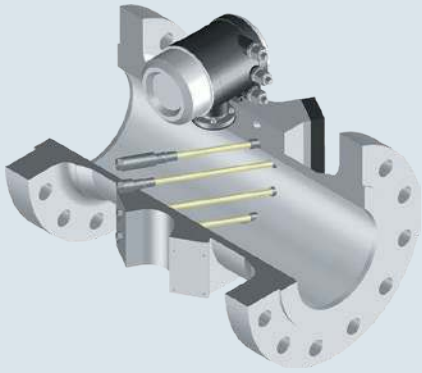

FLOWSIC600, 4-path

- The standard design is equipped with a fourpath system in which the measured values of the individual sensor pairs are averaged.

Standard – ideal for process gas measurement and internal billing

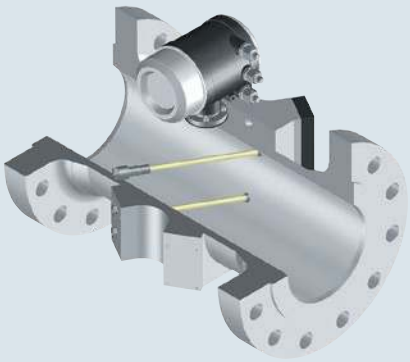

FLOWSIC600, 2-path

- A reliable two-path design provides adequate measurement accuracy in non-custody applications.

Excellent measurement technology – Proven in over 20.000 Installations

The FLOWSIC600 process meter is designed to provide precise and reliable measurement of process gases. The FLOWSIC600 has a fiscal measurement origin, which means that it tested in demanding conditions.

This makes it an excellent choice for applications that require high accuracy and reliability.

Transducers made in Germany

The transducers manufactured manually in Germany in accordance to strict standards and quality control. The premium quality transcducers make the heart of the flowmeter and provide high precision

Handling a range of medias

The ultrasonic technology allows measurement in a range of gases due to transit time measurement principle. With a calibration the measurement accuracy increases significantly. However how to calibrate a flowmeter for service in a media which is not available in standard calibration facilities? This is possible by using the Reynolds number equivalence method.This method has been proven over almost two decades in practice and ensures transferability from calibration to field installation.



With over 30 different types of ultrasonic transducers, the FLOWSIC600 can be used in many different process conditions with varying pressures, temperatures and gas mixtures. The sensors are made from titanium or stainless steel. The hermetically sealed intrinsically safe design works without an active electronic in the sensor directly. This makes the sensors very robust and long term stable.

Intelligent diagnostics

Gas composition surveillance with permanent speed of sound measurement

Thanks to a smart combination of the ultrasonic measurement and electronics data interpretation, the flowmeter provides a lot of information to the user. As the speed of sound depends on media composition, its change indicates a deviation. This is permanently measured and reported to the user.

Automatic Self-Diagnostics

The FLOWSIC600 is equipped with a warning signal that informs the user of a malfunction before the measured value is affected. To do this, current diagnostic indicators are compared to indicators that were learned by the device under normal measurement conditions. The results of the self-diagnostics are permanently logged by an internal electronic data log to allow a retroactive check of the measurement process. Important measured variables such as gas flow and gas velocity (VOG) or diagnostic parameters such as signal-to-noise ratio (SNR) or speed can be read directly.

FLOWgate™ – The intuitively designed operating software

FLOWgate™ intelligently links the diagnostic data and presents them in a processed form. The quick status function provides immediate information about the current status of the application, and if a warning limit is reached, the solution wizard can be used to analyze the problem at the click of a button. In order to get a quick overview or analysis, each user can put together measured values and diagnostics parameters as required in the measure value overview, and then amend or save their overview.

FLOWgate™ provides online or offline access to the FLOWSIC600 and therefore to all the measured value and diagnostic data at any time via a PC or a tablet. The graphic preparation of trend analyses simplifies evaluation of the measurement sequence and gives information about changes to the process. The report manager can be used to create compact diagnostic, maintenance and calibration reports at any time. Different assistance functions, such as for commissioning, considerably simplify device operation.

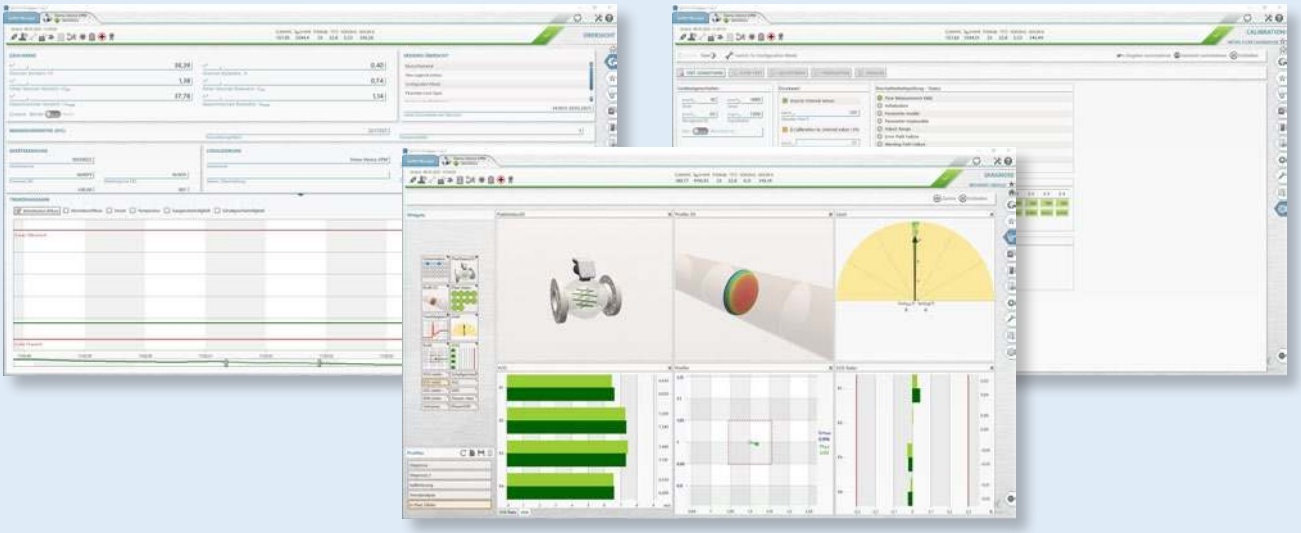

FLOWSIC600
Reliable flowmeter for process applications



Product description

The FLOWSIC600 measurement device is an ultrasonic gas flowmeter and sets the standard in its market segment. The design demonstrates that it is geared to the tough industry conditions. The compact design with integrated cable routing means that the measuring system is durable, failsafe, low-maintenance, and has long-term stability. The FLOWSIC600 features extensive diagnostics options to allow detection of malfunctions even before the measurement is affected and provides process surveillance via speed of sound determination.

At a glance

- Highly efficient ultrasonic transducers portfolio
- Bidirectional measurement
- Low power consumption
- Reduced and full bore design
- Compact, robust design
- Large measuring range 1 : 120
- Real-time speed of sound measurement
- Intelligent self-diagnostics
- Integrated log book and data logger

Your benefits

- Long-term stability, reliable measurement
- Wide application range
- Immune to noisy conditions
- Reliable performance in harsh environment
- Constant gas composition surveillance with speed of sound measurement
- Low maintenance with intelligent self-diagnostics

Fields of application

- Process gases flow metering
- Industry gas metering CO_2, H_2, Air, N_2, O_2, NH_3, Ethylene, Helium, Argon
- Internal allocation measurement
- For gases with high H_2S component such as sour gas or biogas
- Also for process gases
- For gases with high H_2S component such as sour gas or biogas

More Information online

For more information, enter the link or scan the QR code to get direct access to technical data, operating instructions, software, application examples, and much more.
www.endress.com/flowsic600

Technical data

The exact device specifications and product performance data may vary and are dependent on the respective application and customer specifications.

FLOWSIC600

Measured values	Volumetric flow, a. c., volume a. c., gas velocity, sound velocity
Number of measuring paths	2, 4
Measurement principle	Ultrasonic transit time difference measurement
Measuring medium	Natural gas, air, C_2H_4, steam, process gases (e. g. CO_2 up to 100%, N_2, O_2, Cl_2 etc.), gases like sour gas or bio gas with high H_2S content
Measuring ranges	
Volumetric flow, a. c.	4 … 360 m³/h / 1,600 … 36,000 m³/h (15 … 1,271 ft³/h / 56,503 … 1,271,700 ft³/h)
	Measuring ranges depend on nominal pipe size
Repeatability	< 0.1 % of the measured value
Accuracy	
2-path version [1]:	≤ ± 1 %
4-path version [1]:	≤ ± 0.5 %
	[1] Typical accuracy, see application specific data for detailed information
Diagnostics functions	Integrated device diagnosis and extended diagnosis via FLOWGATE software
Gas temperature	
ATEX:	–40 °C … +105 °C (–40 °F … +221 °F) at T1, T2, T3; –40 °C … +91 °C (–40 °F … +196 °F) at T4
Other Ex certifications:	–40 °C … +180 °C (–40 °F … +356 °F)
Operating pressure	0 bar (g) … 250 bar (g) (0 psi (g) … 3,626 psi (g)) On request: Up to 450 bar (g) (6,527 psi (g))
Nominal pipe size	
	2" … 48" (DN 50 … DN 1200)
Ambient temperature	
ATEX, CSA:	–40 °C … +60 °C (–40 °F … +140 °F)
IECEx:	–40 °C … +70 °C (–40 °F … +158 °F)
Optional IECEx:	–50 °C … +70 °C (–58 °F … +158 °F)
Storage temperature	–40 °C … +70 °C (–40 °F … +158 °F)
Ambient humidity	≤ 95 %; relative humidity
Conformities	ISO 17089-2 MTBF: 15.4 years
Ex-approvals	
IECEx	Gb/Ga Ex db eb ib [ia Ga] IIA T4 Gb/Ga Ex db eb ib [ia Ga] IIC T4 Ultrasonic transducers intrinsically safe
ATEX	II 1/2 (1) G Ex ia/db eb ia [ia Ga] IIA/IIB/IIC T4…T1 Ga/Gb III 1/2 (1) G Ex ia/db eb ia [ia Ga] IIC T6 Ga/Gb Ultrasonic transducers intrinsically safe
NEC/CEC (US/CA)	Class I, Division 1, Groups B, C, D T4 Class I, Division 2, Groups A, B, C, D T4 Class I, Division 1, Group D T4 Class I, Division 2, Group D T4 Ultrasonic transducers intrinsically safe

Electrical safety	CE
Enclosure rating	IP 65 / IP 66 / IP 67
Analog outputs	1 output: 4 ... 20 mA, 200 Ω Active/passive, electrically isolated
Digital outputs	3 outputs: 30 V, 10 mA Passive, electrically isolated, Open Collector or according to NAMUR (EN 50227), f_{max} = 6 kHz (scalable)
Interfaces	RS-485 (2x, for configuration, output of measured values and diagnosis)
Bus protocol	Modbus ASCII Modbus RTU HART
Operation	Via meter display and software FLOWGATE
Dimensions (W x H x D)	See dimensional drawings
Weight	Depending on device version
Material in contact with media	Low temperature carbon steel, stainless steel, duplex steel, titanium
Electrical connection	
Voltage	12 ... 28.8 V DC With active current output: 15 ... 28.8 V DC
Power consumption	≤ 1 W

Measuring ranges

Nominal size		Flow rate				Max. velocity *	
		m^3/h		ft^3/h		m/s	ft/s
		Min.	Max.	Min	Max.		
DN 50	2"	4	400	140	14,000	65	213
DN 80	3"	8	1,000	280	35,000	65	213
DN 100	4"	13	1,600	460	56,000	60	197
DN 150	6"	20	3,000	710	106,000	50	164
DN 200	8"	32	4,500	1,130	159,000	45	148
DN 250	10"	50	7,000	1,770	247,000	40	131
DN 300	12"	65	8,000	2,300	282,000	33	108
DN 350	14"	80	10,000	2,830	353,000	33	108
DN 400	16"	120	14,000	4,240	494,000	33	108
DN 450	18"	130	17,000	4,600	600,000	33	108
DN 500	20"	200	20,000	7,070	707,000	33	108
DN 550	22"	260	26,000	9,185	919,000	33	108
DN 600	24"	320	32,000	11,300	1,131,000	33	108

* When using installation configuration 2 (with flow conditioner) the maximum allowed gas velocity in the pipe is limited to 40 m/s (131 ft/s).

Ordering information

Our regional sales organization will help you to select the optimum device configuration.

Dimensional drawings

Versions with nominal sizes from 3" up to and including 14" (cast and forged) (dimensions in mm (inch))

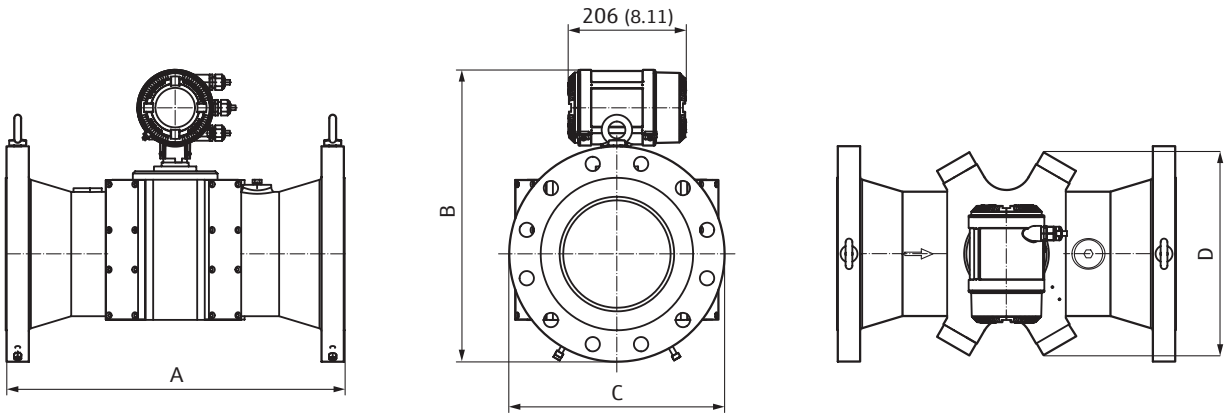

Versions for nominal sizes from 16" (forged)

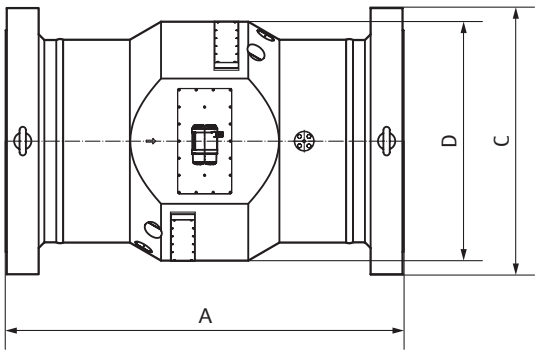

Longitudinal section for nominal widths up to 48"

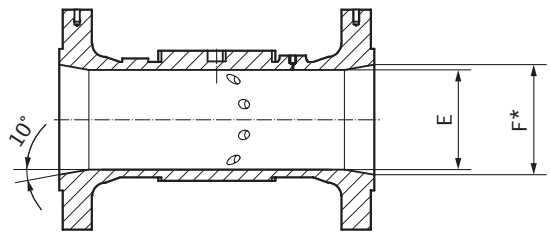

Dimensions

Nominal pipe size	Connection flange	Standard	Weight	Length (A)	Height (B)	Flange diameter (C)	Width of measuring section (D)	Internal diameter (E)
			[kg (lbs)]	[mm (in)]	[mm (in)]	[mm (in)]	[mm (in)]	[mm (in)]
2"	Cl. 150	ANSI B16.5	28 (61.73)	250 (9.84)	325 (12.80)	152.4 (6.00)	110 (4.33)	45 (1.77)
	Cl. 300		31 (68.34)		332 (13.07)	165.1 (6.50)		
	Cl. 600		33 (72.75)		332 (13.07)	165.1 (6.50)		
DN 50	PN 16	EN 1092-1	30 (66.14)		332 (13.07)	165 (6.50)		
	PN 40		30 (66.14)		332 (13.07)	165 (6.50)		
	PN 100		35 (77.16)		347 (13.66)	195 (7.68)		
3"	Cl. 150	ANSI B16.5	37 (81.6)	240.0 (9.45)	344.0 (13.54)	190.0 (7.48)	180.0 (7.09)	73.0 (2.87)
	Cl. 300		38 (83.78)		354.0 (13.94)	210.0 (8.27)		
	Cl. 600		42 (92.59)		354.0 (13.94)	210.0 (8.27)		
	Cl. 900		84 (185.19)	400.0 (15.75)	395.0 (15.55)	240.0 (9.45)		
DN 80	PN 16	DIN 2633	37 (81.6)	240.0 (9.45)	349.0 (13.74)	200.0 (7.87)		
	PN 63	DIN 2636	40 (88.18)		356.0 (14.02)	215.0 (8.46)		
	PN 100	DIN 2637	43 (94.79)		364.0 (14.33)	230.0 (9.06)		
4"	Cl. 150	ANSI B16.5	44 (97.00)	300.0 (11.81)	375.0 (14.76)	230.0 (9.06)	240.0 (9.45)	95.0 (3.74)
	Cl. 300		55 (121.25)		388.0 (15.28)	255.0 (10.04)		
	Cl. 600		66 (145.50)		398.0 (15.67)	275.0 (10.83)		
	Cl. 900		99 (218.26)	500.0 (19.69)	408.0 (16.06)	290.0 (11.42)		
DN 100	PN 16	DIN 2633	40 (88.18)	300.0 (11.81)	372.0 (14.65)	220.0 (8.66)		
	PN 63	DIN 2636	52 (114.64)		405.0 (15.94)	250.0 (9.84)		
	PN 100	DIN 2637	61 (134.21)		410.0 (16.14)	265.0 (10.43)		

Nominal pipe size	Connection flange	Standard	Weight	Length (A)	Height (B)	Flange diameter (C)	Width of measuring section (D)	Internal diameter (E)
			[kg (lbs)]	[mm (in)]	[mm (in)]	[mm (in)]	[mm (in)]	[mm (in)]
6"	Cl. 150	ANSI B16.5	100 (220.46)	450.0 (17.72)	445.0 (17.52)	280.0 (11.02)	300.0 (11.81)	142.0 (5.59)
	Cl. 300		110 (242.51)		465.0 (18.31)	320.0 (12.6)		
	Cl. 600		140 (308.65)		483.0 (19.02)	355.0 (13.98)		
	Cl. 900		220 (485.01)	750.0 (29.53)	496.0 (19.53)	380.0 (14.96)		
DN 150	PN 16	DIN 2633	90 (198.41)	450.0 (17.72)	448.0 (17.64)	285.0 (11.22)		
	PN 63	DIN 2636	110 (242.51)		478.0 (18.82)	345.0 (13.58)		
	PN 100	DIN 2637	130 (286.60)		483.0 (19.02)	355.0 (13.98)		
8″	Cl. 150	ANSI B16.5	150 (330.69)	600.0 (23.62)	498.0 (19.61)	345.0 (13.58)	350.0 (13.78)	190.0 (7.48)
	Cl. 300		180 (396.83)		516.0 (20.31)	380.0 (14.96)		
	Cl. 600		210 (462.97)		536.0 (21.1)	420.0 (16.54)		
	Cl. 900		300 (661.39)		562.0 (22.13)	470.0 (18.5)		
DN 200	PN 16	DIN 2633	140 (308.65)		498.0 (19.61)	340.0 (13.39)		
	PN 63	DIN 2636	190 (418.88)		535.0 (21.06)	415.0 (16.34)		
	PN 100	DIN 2637	210 (462.97)		543.0 (21.38)	430.0 (16.93)		
10″	Cl. 150	ANSI B16.5	240 (528.80)	750.0 (29.53)	548.0 (21.57)	405.0 (15.94)	410.0 (16.14)	235.0 (9.25)
	Cl. 300		250 (551.15)		568.0 (22.36)	445.0 (17.52)		
	Cl. 600		330 (727.86)		600.0 (23.62)	510.0 (20.08)		
	Cl. 900		470 (1,036.88)		625.0 (24.61)	545.0 (21.46)		
DN 250	PN 16	DIN 2633	220 (485.01)		547.0 (21.54)	405.0 (15.94)		
	PN 63	DIN 2636	270 (595.25)		580.0 (22.83)	470.0 (18.5)		
	PN 100	DIN 2637	320 (705.48)		597.0 (23.5)	505.0 (19.88)		

Nominal pipe size	Connection flange	Standard	Weight	Length (A)	Height (B)	Flange diameter (C)	Width of measuring section (D)	Internal diameter (E)
			[kg (lbs)]	[mm (in)]	[mm (in)]	[mm (in)]	[mm (in)]	[mm (in)]
12″	Cl. 150	ANSI B16.5	350 (770.66)	900.0 (35.43)	586.0 (23.07)	485.0 (19.09)	470.0 (18.5)	270.0 (10.63)
	Cl. 300		400 (881.85)		605.0 (23.82)	520.0 (20.47)		
	Cl. 600		490 (1,080.28)		625.0 (24.61)	560.0 (22.05)		
	Cl. 900		720 (1,587.30)		685.0 (26.97)	610.0 (24.02)		
DN 300	PN 16	DIN 2633	325 (716.50)		575.0 (22.64)	460.0 (18.11)		
	PN 63	DIN 2636	425 (937.0)		610.0 (24.02)	530.0 (20.87)		
	PN 100	DIN 2637	525 (1,157.4)		638.0 (25.12)	585.0 (23.03)		
14″	Cl. 150	ANSI B16.5	475 (1,047.2)	1,050.0 (41.34)	642.0 (25.28)	535.0 (21.06)	540.0 (21.26)	315.0 (12.4)
	Cl. 300		600 (1,322.8)		667.0 (26.26)	585.0 (23.03)		
	Cl. 600		675 (1,488.1)		677.0 (26.65)	605.0 (23.82)		
	Cl. 900		850 (1,873.9)		700.0 (27.56)	640.0 (25.2)		
DN 350	PN 16	DIN 2633	475 (1,047.2)		635.0 (25.0)	520.0 (20.47)		
	PN 63	DIN 2636	625 (1,377.9)		675.0 (26.57)	600.0 (23.62)		
	PN 100	DIN 2637	750 (1,653.5)		705.0 (27.76)	655.0 (25.79)		
For all meter ≥ 16" an installation length of 3D is optionally available								
16″	Cl. 150	ANSI B16.5	475 (1,047.2)	762.0 (30.0)	700.0 (27.56)	595.0 (23.43)	570.0 (22.44)	360.0 (14.17)
	Cl. 300		550 (1,212.5)		728.0 (28.66)	650.0 (25.59)		
	Cl. 600		640 (1,410.9)		745.0 (29.33)	685.0 (26.97)		
	Cl. 900		1,025 (2,250.0)	800.0 (31.5)	755.0 (29.72)	705.0 (27.76)		
DN 400	PN 16	DIN 2633	370 (815.7)	762.0 (30.0)	693.0 (27.28)	580.0 (22.83)		
	PN 63	DIN 2636	600 (1,322.8)		738.0 (29.06)	670.0 (26.38)		

Nominal pipe size	Connection flange	Standard	Weight	Length (A)	Height (B)	Flange diameter (C)	Width of measuring section (D)	Internal diameter (E)
			[kg (lbs)]	[mm (in)]	[mm (in)]	[mm (in)]	[mm (in)]	[mm (in)]
18"	Cl. 150	ANSI B16.5	660 (1,455.4)	820.0 (32.28)	754.0 (29.69)	635.0 (25.0)	620.0 (24.41)	405.0 (15.94)
	Cl. 300		760 (1,675.5)		792.0 (31.18)	710.0 (27.95)		
	Cl. 600		960 (2,116.0)		820.0 (32.28)	745.0 (29.33)		
	Cl. 900		1,300 (2,866.0)	900.0 (35.43)	830.0 (32.68)	785.0 (30.91)		
DN 450	PN 16	Data on request						
20"	Cl. 150	ANSI B16.5	750 (1,653.5)	902.0 (35.51)	815.0 (32.09)	700.0 (27.56)	670.0 (26.38)	450.0 (17.72)
	Cl. 300		930 (2,050.0)		853.0 (33.58)	775.0 (30.51)		
	Cl. 600		1080 (2,381.0)		872.0 (34.33)	815.0 (32.09)		
	Cl. 900		1500 (3,306.9)	1,000.0 (39.37)	892.0 (35.12)	855.0 (33.66)		
DN 500	PN 16	DIN 2633	700 (1,543.2)	902.0 (35.51)	823.0 (32.4)	715.0 (28.15)		
22"	Cl. 150	Data on request						
	Cl. 300							
	Cl. 600							
	Cl. 900							
DN 550	PN 16							
24"	Cl. 150	ANSI B16.5	1,090 (2,403.1)	991.0 (39.02)	927.0 (36.5)	815.0 (32.09)	760.0 (29.92)	540.0 (21.26)
	Cl. 300		1,390 (3,064.6)		978.0 (38.5)	915.0 (36.02)		
	Cl. 600		1,615 (3,562.1)		990.0 (38.98)	940.0 (37.01)		
	Cl. 900		2,100 (4,629.9)	1,200.0 (47.24)	1,040.0 (40.94)	1,040.0 (40.94)		
DN 600	PN 16	DIN 2633	1,015 (2,230.4)	991.0 (39.02)	940.0 (37.01)	840.0 (33.07)		

Instruction for installation

FLOWSIC600 integration into the pipeline for unidirectional use in configuration 1 (A) and configuration 2 (B)

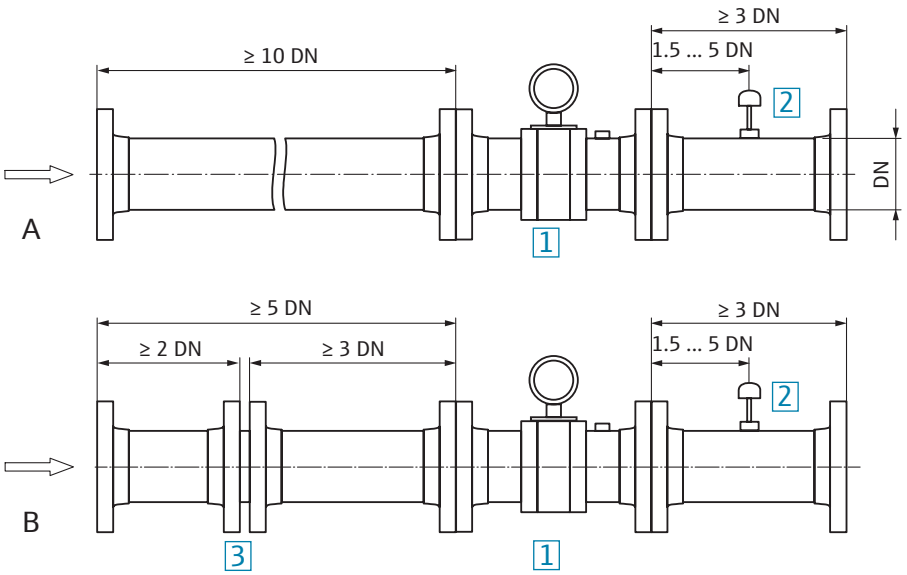

1 FLOWSIC600
2 Temperature measuring point
3 Flow conditioner

FLOWSIC600 integration into the pipeline for bidirectional use in configuration 1 (A) and configuration 2 (B)

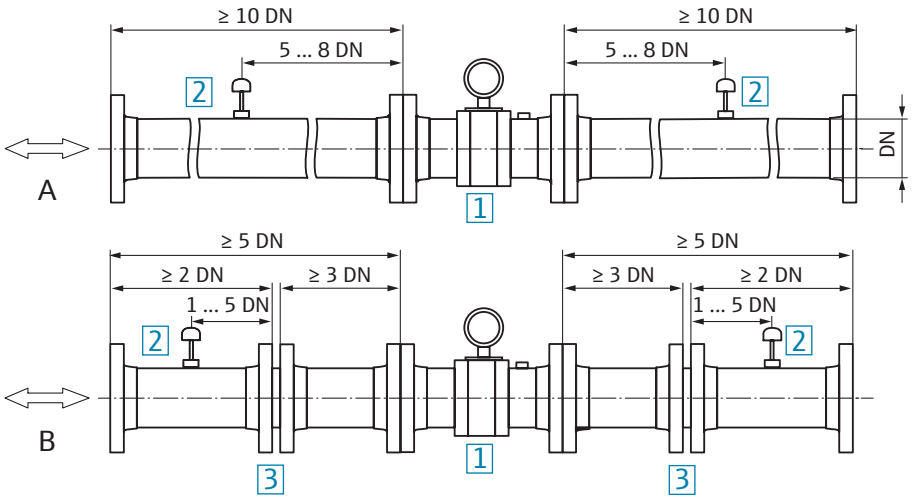

1 FLOWSIC600
2 Temperature measuring point
3 Flow conditioner

Application specific technical data

Hydrogen [H_2]

	Flowrate [m³/h (ft³/h)]		Maximum Velocity [m/s (ft/s)]	Length (flange-to-flange) [mm (in)]	Weight (ANSI CL600) [kg(lbs)]
	min*	max			
DN150/6 inch	85 (3,000)	1710 (60,460)	30 (98.4)	450 (17.7)	150 (330.7)
DN200/8 inch	115 (4,062)	3000 (105,945)	30 (98.4)	600 (23.6)	220 (485)
DN250/10 inch	140 (4,939)	4600 (162,571)	30 (98.4)	750 (29.5)	330 (727.5)
DN300/12 inch	160 (5,654)	6200 (219,253)	30 (98.4)	900 (35.4)	500 (1,102.3)
DN400/16 inch	215 (7,594)	11000 (388,500)	30 (98.4)	762 (30)	650 (1,433)
DN500/20 inch	625 (22,071)	17200 (607,850)	30 (98.4)	902 (35.5)	990 (2,183)
DN600/24 inch	750 (26,460)	24700 (872,116)	30 (98.4)	991 (39.1)	1615 (3,560.5)
Material	Meter Body: LT-CS (A352 LCC, A350 LF2), two layer RAL9003 coated or Stainless Steel (A182 Gr. 316/316L), uncoated Electronics: Aluminum or Stainless Steel Transducer: Stainless Steel				
Flange Type	ASME B16.5				

* Referenced speed of sound at 1350 m/s, equivalent e.g. p = 50 bar at T = 20 °C (100% H_2)

Measured values	Volumetric flow, a. c., volume a. c., gas velocity, speed of sound
Number of meas. paths	1+1 paths crossed (DN500 and DN600 2 paths in plane)
Measurement principle	Ultrasonic transit time difference measurement
Measurement medium	H_2 (95 ... 100%)
Repeatability	± 0.5% of the measured value (typical)
Accuracy (0.1 Q_{max} ... Q_{max})	≤ ± 2.0% (un-calibrated), ≤ ± 4.0% below 0.1 Q_{max} (typical)
Min. piping requirements	Straight inlet section of ≥ 20D or ≥ 10D with flow conditioner
Operating pressure (typical)	5 ... 100 bar(a) (72.52 ... 1450.38 psi(a)) (minimum pressure depending on line size and H_2 content)
Gas temperature	
ATEX:	−40 °C ... +105 °C (−40 °F ... +221 °F) at T1, T2, T3; −40 °C ... +91 °C (−40 °F ... +196 °F) at T4
Other Ex certifications:	−40 °C ... +180 °C (−40 °F ... +356 °F)
Ambient temperature	
ATEX, CSA:	−40 °C ... +60 °C (−40 °F ... +140 °F)
IECEx:	−40 °C ... +70 °C (−40 °F ... +158 °F)
Optional IECEx:	−50 °C ... +70 °C (−58 °F ... +158 °F)
Ambient humidity	≤ 95% relative humidity; non-condensing
Conformities	ISO17089-2
Ex-approvals	CSA, ATEX, IECEx, Zone 1 Classification according IIC T4, intrinsically safe transducers
Electrical safety	CE
Enclosure rating	IP66 / IP67
I/O configuration	1x RS485, 1x Pulse, 2x Status Outputs, 1x Analog Output (4-20mA / HART) 2x RS485, 2x Pulse, 1x Status Outputs

Carbon dioxide [CO_2]

	Flowrate [m^3/h (ft^3/h)]		Maximum Velocity [m/s (ft/s)]	Length (flange-to-flange) [mm (in)]	Weight (ANSI CL600) [kg(lbs)]
	min	max			
DN80/3 inch	8 (282.5)	390 (13,790)	24 (78.7)	320 (12.6)	42 (92.6)
DN100/4 inch	13 (459.8)	610 (21,523)	24 (78.7)	300 (11.8)	66 (145.5)
DN150/6 inch	20 (706.2)	1500 (52,910)	24 (78.7)	450 (17.7)	150 (330.7)
DN200/8 inch	32 (1,131)	2400 (84,851)	24 (78.7)	600 (23.6)	220 (485)
DN250/10 inch	50 (1,766)	3900 (137,778)	24 (78.7)	750 (29.5)	330 (727.5)
DN300/12 inch	65 (2,296)	4700 (165,725)	22 (72.1)	900 (35.4)	500 (1,102)
DN350/14 inch	80 (2,827)	6100 (215,423)	22 (72.1)	1050 (41.3)	580 (1,278)
DN400/16 inch	120 (4,243)	7900 (279,390)	22 (72.1)	762 (30)	650 (1,433)
DN500/20 inch	200 (7,062)	12200 (430,258)	21 (68.9)	902 (35.5)	990 (2,183)
DN600/24 inch	320 (11,325)	17000 (600,014)	21 (68.9)	991 (39.1)	1615 (3,560)
Material	Meter Body: LT-CS (A352 LCC, A350 LF2), two layer RAL9003 coated or Stainless Steel (A182 Gr. 316/316L), uncoated; Electronics: Aluminum or Stainless Steel Transducer: Titanium				
Flange Type	ASME B16.5				

Measured values	Volumetric flow, a. c., volume a. c., gas velocity, sound velocity
Number of meas. paths	2 (line size 3-6 inch / DN80-150), 4 (line size ≥8 inch / DN200)
Measurement principle	Ultrasonic transit time difference measurement
Measurement medium	CO_2 (95 ... 100%), gaseous or super critical phase (single phase condition, not mixed)
Repeatability	± 0.1% of the measured value (typical)
Accuracy (0.1 Q_{max} ... Q_{max})	
4-path meter (8 ... 24 inch)	≤ ± 0.5% (un-calibrated), ≤ ± 1.0% below 0.1 Q_{max} (typical)
2-path meter (3 ... 6 inch)	≤ ± 1.0% (un-calibrated), ≤ ± 2.0% below 0.1 Q_{max} (typical)
Min. piping requirements	straight inlet section of ≥ 10D or ≥ 5D with flow conditioner
Operating pressure (typical)	0 ... 100 bar (0 ... 1450.38 psi); (100 ... 250 bar (1450.38 ... 3625.95 psi) on request)
Gas temperature	
ATEX:	−40 °C ... +105 °C (−40 °F ... +221 °F) at T1, T2, T3; −40 °C ... +91 °C (−40 °F ... +196 °F) at T4
Other Ex certifications:	−40 °C ... +180 °C (−40 °F ... +356 °F)
Ambient temperature	
ATEX, CSA:	−40 °C ... +60 °C (−40 °F ... +140 °F)
IECEx:	−40 °C ... +70 °C (−40 °F ... +158 °F)
Optional IECEx:	−50 °C ... +70 °C (−58 °F ... +158 °F)
Ambient humidity	≤ 95% relative humidity; non-condensing
Conformities	ISO17089-2
Ex-approvals	CSA, ATEX, IECEx, Zone 1 and Zone 2 Classification according IIA or IIC T4, intrinsically safe transducers
Electrical safety	CE
Enclosure rating	IP66 / IP67
I/O configuration	1x RS485, 1x Pulse, 2x Status Outputs, 1x Analog Output (4-20mA / HART) or 2x RS485, 2x Pulse, 1x Status Outputs

Oxygen [O_2]

	Flowrate [m³/h (ft³/h)]		Maximum Velocity [m/s (ft/s)]	Length (flange-to-flange) [mm (in)]	Weight (ANSI CL600) [kg(lbs)]
	min	max*			
DN80/3 inch	8 (282.5)	400 (14,125)	25 (82)	240 (9.4)	42 (92.6)
DN100/4 inch	13 (459.8)	600 (21,188)	25 (82)	300 (11.8)	66 (145.5)
DN150/6 inch	20 (706.2)	1400 (49,440)	25 (82)	450 (17.7)	150 (330.7)
DN200/8 inch	32 (1,131)	2500 (88,286)	25 (82)	600 (23.6)	220 (485)
DN250/10 inch	50 (1,766)	4000 (141,258)	25 (82)	750 (29.5)	330 (727.5)
DN300/12 inch	65 (2,296)	5000 (176,573)	25 (82)	900 (35.4)	500 (1,102)
DN350/14 inch	80 (2,827)	7000 (247,202)	25 (82)	1050 (41.3)	580 (1,278)
DN400/16 inch	120 (4,243)	9000 (317,832)	25 (82)	762 (30)	650 (1,433)
DN500/20 inch	200 (7,062)	14000 (494,405)	25 (82)	902 (35.5)	990 (2,183)
DN600/24 inch	320 (11,325)	20000 (706,293)	25 (82)	991 (39.1)	1615 (3,560)
Material	Meter Body: LT-CS (A352 LCC, A350 LF2), two layer RAL9003 coated or Stainless Steel (A182 Gr. 316/316L), uncoated; Electronics: Aluminum or Stainless Steel Transducer: Stainless Steel				
Flange Type	ASME B16.5				

*max. velocity reduced to 8 m/s at pressure >40 bar(g)

Measured values	Volumetric flow, a. c., volume a. c., gas velocity, sound velocity
Number of meas. paths	2 (line size 3-4 inch / DN80-150), 4 (line size ≥6 inch / DN200)
Measurement principle	Ultrasonic transit time difference measurement
Measurement medium	O_2
Repeatability	± 0.1% of the measured value (typical)
Accuracy (0.1 Q_{max} ... Q_{max})	
4-path meter (8 ... 24 inch)	≤ ± 0.5% (un-calibrated), ≤ ± 1.0% below 0.1 Q_{max} (typical)
2-path meter (3 ... 6 inch)	≤ ± 1.0% (un-calibrated), ≤ ± 2.0% below 0.1 Q_{max} (typical)
Min. piping requirements	straight inlet section of ≥ 10D (use of flow conditioner is not allowed in O^2)
Operating pressure (typical)	0 ... 40 bar(g) (0 ... 580.15 psi(g)); (>40 bar (>580.15 psi) on request with limitation of v_{max} = 8 m/s (26.25 ft/s))
Gas temperature	
ATEX:	−40 °C ... +105 °C (−40 °F ... +221 °F) at T1, T2, T3; −40 °C ... +91 °C (−40 °F ... +196 °F) at T4
Other Ex certifications:	−40 °C ... +180 °C (−40 °F ... +356 °F)
Ambient temperature	
ATEX, CSA:	−40 °C ... +60 °C (−40 °F ... +140 °F)
IECEx:	−40 °C ... +70 °C (−40 °F ... +158 °F)
Optional IECEx:	−50 °C ... +70 °C (−58 °F ... +158 °F)
Ambient humidity	≤ 95% relative humidity; non-condensing
Conformities	ISO17089-2
Ex-approvals	CSA, IECEx, Zone 1 and Zone 2 Classification according IIA or IIC T4, intrinsically safe transducers
Electrical safety	CE
Enclosure rating	IP66 / IP67
I/O configuration	1x RS485, 1x Pulse, 2x Status Outputs, 1x Analog Output (4-20mA / HART) 2x RS485, 2x Pulse, 1x Status Outputs

Nitrogen [N_2]

	Flowrate [m³/h (ft³/h)]		Maximum Velocity [m/s (ft/s)]	Length (flange-to-flange) [mm (in)]	Weight (ANSI CL600) [kg(lbs)]
	min	max			
DN80/3 inch	8 (282.5)	650 (22,971)	40 (131.2)	240 (9.4)	42 (92.6)
DN100/4 inch	13 (459.8)	1000 (35,314)	40 (131.2)	300 (11.8)	66 (145.5)
DN150/6 inch	20 (706.2)	2200 (77,692)	40 (131.2)	450 (17.7)	150 (330.7)
DN200/8 inch	32 (1,131)	4000 (141,258)	40 (131.2)	600 (23.6)	220 (485)
DN250/10 inch	50 (1,766)	6200 (219,253)	40 (131.2)	750 (29.5)	330 (727.5)
DN300/12 inch	65 (2,296)	7800 (276,453)	40 (131.2)	900 (35.4)	500 (1,102)
DN350/14 inch	80 (2,827)	10000 (353,147)	35 (114.8)	1050 (41.3)	580 (1,278)
DN400/16 inch	120 (4,243)	13000 (459,091)	35 (114.8)	762 (30)	650 (1,433)
DN500/20 inch	200 (7,062)	20000 (706,293)	35 (114.8)	902 (35.5)	990 (2,183)
DN600/24 inch	320 (11,325)	28000 (989,811)	34 (111.5)	991 (39.1)	1615 (3,560)
Material	Meter Body: LT-CS (A352 LCC, A350 LF2), two layer RAL9003 coated Electronics: Aluminum Transducer: Titanium				
Flange Type	ASME B16.5				

Measured values	Volumetric flow, a. c., volume a. c., gas velocity, sound velocity
Number of meas. paths	4
Measurement principle	Ultrasonic transit time difference measurement
Measurement medium	N_2
Repeatability	± 0.1% of the measured value (typical)
Accuracy (0.1 Q_{max} ... Q_{max})	≤ ± 0.5% (un-calibrated), ≤ ± 1.0% below 0.1 Q_{max} (typical)
Min. piping requirements	ISO17089-1&2: with straight inlet section of ≥ 10D or ≥ 5D with flow conditioner
Operating pressure (typical)	0 ... 100 bar (0 psi ... 1450.38 psi); (>100 bar (>1450.38 psi) on request)
Gas temperature	
ATEX:	−40 °C ... +105 °C (−40 °F ... +221 °F) at T1, T2, T3; −40 °C ... +91 °C (−40 °F ... +196 °F) at T4
Other Ex certifications:	−40 °C ... +180 °C (−40 °F ... +356 °F)
Ambient temperature	
ATEX, CSA:	−40 °C ... +60 °C (−40 °F ... +140 °F)
IECEx:	−40 °C ... +70 °C (−40 °F ... +158 °F)
Optional IECEx:	−50 °C ... +70 °C (−58 °F ... +158 °F)
Ambient humidity	≤ 95% relative humidity; non-condensing
Conformities	ISO17089-2
Ex-approvals	CSA, IECEx, Zone 1 and Zone 2 Classification according IIA or IIC T4, intrinsically safe transducers
Electrical safety	CE
Enclosure rating	IP66 / IP67
I/O configuration	1x RS485, 1x Pulse, 2x Status Outputs, 1x Analog Output (4-20mA / HART) 2x RS485, 2x Pulse, 1x Status Outputs

Ammonia [NH_3]

	Flowrate [m^3/h (ft^3/h)]		Maximum Velocity [m/s (ft/s)]	Length (flange-to-flange) [mm (in)]	Weight (ANSI CL600) [kg(lbs)]
	min	max			
DN80/3 inch	8 (282.5)	650 (22,971)	40 (131.2)	240 (9.4)	42 (92.6)
DN100/4 inch	13 (459.8)	1000 (35,314)	40 (131.2)	300 (11.8)	66 (145.5)
DN150/6 inch	20 (706.2)	2200 (77,692)	40 (131.2)	450 (17.7)	150 (330.7)
DN200/8 inch	32 (1,131)	4000 (141,258)	40 (131.2)	600 (23.6)	220 (485)
DN250/10 inch	50 (1,766)	6200 (219,253)	40 (131.2)	750 (29.5)	330 (727.5)
DN300/12 inch	65 (2,296)	7800 (276,453)	40 (131.2)	900 (35.4)	500 (1,102)
DN350/14 inch	80 (2,827)	10000 (353,147)	35 (114.8)	1050 (41.3)	580 (1,278)
DN400/16 inch	120 (4,243)	13000 (459,091)	35 (114.8)	762 (30)	650 (1,433)
DN500/20 inch	200 (7,062)	20000 (706,293)	35 (114.8)	820 (32.2)	990 (2,183)
DN600/24 inch	320 (11,325)	28000 (989,811)	34 (111.5)	991 (39.1)	1615 (3,560)
Material	Meter Body: LT-CS (A352 LCC, A350 LF2), two layer RAL9003 coated or Stainless Steel (A182 Gr. 316/316L), uncoated Electronics: aluminum Transducer: titanium, stainless steel				
Flange Type	ASME B16.5				

Measured values	Volumetric flow, a. c., volume a. c., gas velocity, sound velocity
Number of meas. paths	4
Measurement principle	Ultrasonic transit time difference measurement
Measurement medium	NH_3
Repeatability	± 0.1% of the measured value (typical)
Accuracy (0.1 Q_{max} ... Q_{max})	≤ ± 0.5% (un-calibrated), ≤ ± 1.0% below 0.1 Q_{max} (typical)
Min. piping requirements	ISO17089-1&2: with straight inlet section of ≥ 10D or ≥ 5D with flow conditioner
Operating pressure (typical)	0 bar ... 100 bar (0 psi ... 1450.38 psi) (in gaseous and supercritical phase)
Gas temperature	
ATEX:	−40 °C ... +105 °C (−40 °F ... +221 °F) at T1, T2, T3; −40 °C ... +91 °C (−40 °F ... +196 °F) at T4
Other Ex certifications:	−40 °C ... +180 °C (−40 °F ... +356 °F)
Ambient temperature	
ATEX, CSA:	−40 °C ... +60 °C (−40 °F ... +140 °F)
IECEx:	−40 °C ... +70 °C (−40 °F ... +158 °F)
Optional IECEx:	−50 °C ... +70 °C (−58 °F ... +158 °F)
Ambient humidity	≤ 95% relative humidity; non-condensing
Conformities	ISO17089-2
Ex-approvals	CSA, IECEx, Zone 1 and Zone 2 Classification according IIA or IIC T4, intrinsically safe transducers
Electrical safety	CE
Enclosure rating	IP66 / IP67
I/O configuration	1x RS485, 1x Pulse, 2x Status Outputs, 1x Analog Output (4-20mA / HART) 2x RS485, 2x Pulse, 1x Status Outputs

Ethylene [C_2H_4]

	Flowrate [m³/h (ft³/h)]		Maximum Velocity [m/s (ft/s)]	Length (flange-to-flange) [mm (in)]	Weight (ANSI CL600) [kg(lbs)]
	min	max			
DN80/3 inch	8 (282.5)	650 (22,971)	40 (131.2)	240 (9.4)	42 (92.6)
DN100/4 inch	13 (459.8)	1000 (35,314)	40 (131.2)	300 (11.8)	66 (145.5)
DN150/6 inch	20 (706.2)	2200 (77,692)	40 (131.2)	450 (17.7)	150 (330.7)
DN200/8 inch	32 (1,131)	4000 (141,258)	40 (131.2)	600 (23.6)	220 (485)
DN250/10 inch	50 (1,766)	6200 (219,253)	40 (131.2)	750 (29.5)	330 (727.5)
DN300/12 inch	65 (2,296)	7800 (276,453)	40 (131.2)	900 (35.4)	500 (1,102)
DN350/14 inch	80 (2,827)	10000 (353,147)	35 (114.8)	1050 (41.3)	580 (1,278)
DN400/16 inch	120 (4,243)	13000 (459,091)	35 (114.8)	762 (30)	650 (1,433)
DN500/20 inch	200 (7,062)	20000 (706,293)	35 (114.8)	820 (32.2)	990 (2,183)
DN600/24 inch	320 (11,325)	28000 (989,811)	34 (111.5)	991 (39.1)	1615 (3,560)
Material	Meter Body: LT-CS (A352 LCC, A350 LF2), two layer RAL9003 coated or Stainless Steel (A182 Gr. 316/316L), uncoated Electronics: aluminum Transducer: titanium, stainless steel				
Flange Type	ASME B16.5				

* Q_{max} could be lower at low speed of sound

Measured values	Volumetric flow, a. c., volume a. c., gas velocity, sound velocity
Number of meas. paths	4
Measurement principle	Ultrasonic transit time difference measurement
Measurement medium	C_2H_4
Repeatability	± 0.1% of the measured value (typical)
Accuracy (0.1 Q_{max} ... Q_{max})	≤ ± 0.5% (un-calibrated), ≤ ± 1.0% below 0.1 Q_{max} (typical)
Min. piping requirements	ISO17089-1&2: with straight inlet section of ≥ 10D or ≥ 5D with flow conditioner
Operating pressure (typical)	0 bar ... 100 bar (0 psi ... 1450.38 psi) (in gaseous and supercritical phase)
Gas temperature	
ATEX:	–40 °C ... +105 °C (–40 °F ... +221 °F) at T1, T2, T3; –40 °C ... +91 °C (–40 °F ... +196 °F) at T4
Other Ex certifications:	–40 °C ... +180 °C (–40 °F ... +356 °F)
Ambient temperature	
ATEX, CSA:	–40 °C ... +60 °C (–40 °F ... +140 °F)
IECEx:	–40 °C ... +70 °C (–40 °F ... +158 °F)
Optional IECEx:	–50 °C ... +70 °C (–58 °F ... +158 °F)
Ambient humidity	≤ 95% relative humidity; non-condensing
Conformities	ISO17089-2
Ex-approvals	CSA, IECEx, Zone 1 and Zone 2 Classification according IIA or IIC T4, intrinsically safe transducers
Electrical safety	CE
Enclosure rating	IP66 / IP67
I/O configuration	1x RS485, 1x Pulse, 2x Status Outputs, 1x Analog Output (4-20mA / HART) 2x RS485, 2x Pulse, 1x Status Outputs

Argon [Ar]

	Flowrate [m³/h (ft³/h)]		Maximum Velocity [m/s (ft/s)]	Length (flange-to-flange) [mm (in)]	Weight (ANSI CL600) [kg(lbs)]
	min	max			
DN80/3 inch	8 (282.5)	650 (22,971)	40 (131.2)	240 (9.4)	42 (92.6)
DN100/4 inch	13 (459.8)	1000 (35,314)	40 (131.2)	300 (11.8)	66 (145.5)
DN150/6 inch	20 (706.2)	2200 (77,692)	40 (131.2)	450 (17.7)	150 (330.7)
DN200/8 inch	32 (1,131)	4000 (141,258)	40 (131.2)	600 (23.6)	220 (485)
DN250/10 inch	50 (1,766)	6200 (219,253)	40 (131.2)	750 (29.5)	330 (727.5)
DN300/12 inch	65 (2,296)	7800 (276,453)	40 (131.2)	900 (35.4)	500 (1,102)
DN350/14 inch	80 (2,827)	10000 (353,147)	35 (114.8)	1050 (41.3)	580 (1,278)
DN400/16 inch	120 (4,243)	13000 (459,091)	35 (114.8)	762 (30)	650 (1,433)
DN500/20 inch	200 (7,062)	20000 (706,293)	35 (114.8)	902 (35.5)	990 (2,183)
DN600/24 inch	320 (11,325)	28000 (989,811)	34 (111.5)	991 (39.1)	1615 (3,560)
Material	Meter Body: LT-CS (A352 LCC, A350 LF2), two layer RAL9003 coated Electronics: Aluminum Transducer: Titanium				
Flange Type	ASME B16.5				

Measured values	Volumetric flow, a. c., volume a. c., gas velocity, sound velocity
Number of meas. paths	4
Measurement principle	Ultrasonic transit time difference measurement
Measurement medium	C_2H_4
Repeatability	± 0.1% of the measured value (typical)
Accuracy (0.1 Q_{max} ... Q_{max})	≤ ± 0.5% (un-calibrated), ≤ ± 1.0% below 0.1 Q_{max} (typical)
Min. piping requirements	ISO17089-1&2: with straight inlet section of ≥ 10D or ≥ 5D with flow conditioner
Operating pressure (typical)	0 bar ... 100 bar (0 psi ... 1450.38 psi)(in gaseous and supercritical phase)
Gas temperature	
ATEX:	−40 °C ... +105 °C (−40 °F ... +221 °F) at T1, T2, T3; −40 °C ... +91 °C (−40 °F ... +196 °F) at T4
Other Ex certifications:	−40 °C ... +180 °C (−40 °F ... +356 °F)
Ambient temperature	
ATEX, CSA:	−40 °C ... +60 °C (−40 °F ... +140 °F)
IECEx:	−40 °C ... +70 °C (−40 °F ... +158 °F)
Optional IECEx:	−50 °C ... +70 °C (−58 °F ... +158 °F)
Ambient humidity	≤ 95% relative humidity; non-condensing
Conformities	ISO17089-2
Ex-approvals	CSA, IECEx, Zone 1 and Zone 2 Classification according IIA or IIC T4, intrinsically safe transducers
Electrical safety	CE
Enclosure rating	IP66 / IP67
I/O configuration	1x RS485, 1x Pulse, 2x Status Outputs, 1x Analog Output (4-20mA / HART) 2x RS485, 2x Pulse, 1x Status Outputs

www.addresses.endress.com

Eco-friendly produced and printed on paper
from sustainable forestry.

IN01390D/90/EN/02.26-00
(8029730 / EN / V5-1)

Endress+Hauser

People for Process Automation