TI01523D/06/EN/04.25-00
71723679
2025-09-30

Technical Information
Proline Promag W 800

Electromagnetic flowmeter



Long-lasting battery-powered magmeter with secure system integration and communication

Application

- The bidirectional measuring principle is virtually independent of pressure, density, temperature and viscosity
- Available as enhanced version for full performance and standard version for basic functionality.
- Designed for drinking water distribution networks in regions without power supply

Device properties

- International drinking water approvals
- Degree of protection IP68 (Type 6P enclosure)
- Transmitter housing made of durable polycarbonate
- Battery life time up to 15 years
- Measuring intervals can be adapted individually

Your benefits

- With corrosion protection for underground installation or permanent underwater use
- Improved process safety – leakage detection with low flow and pressure measurement
- Reliable measurement – accurate measured values even with 0 x DN inlet run
- Long-term operation – robust and completely welded sensor
- Secure data storage and transmission – worldwide encrypted communication over the mobile network
- Convenient commissioning and operation – device access via Bluetooth using intuitive SmartBlue app
- Integrated verification – Heartbeat Technology

Endress+Hauser
People for Process Automation

Table of contents

About this document 4
Symbols 4

Function and system design 5
Measuring principle 5
Measuring system 6
Equipment architecture 7
Cellular radio communication 7
Custody transfer (optional) 8
Reliability 9

Input 10
Measured variable 10
Measuring range 10
Operable flow range 12
Input signal 12

Output 13
Output signal 13
Signal on alarm 13
Low flow cut off 14
Galvanic isolation 14
Protocol-specific data 14
Data logger 15

Power supply 16
Pin assignment, Proline 800 - Standard 16
Terminal assignment, Proline 800 - Advanced 17
Supply voltage 18
Battery concept 18
Power consumption 21
Device fuse 21
Current consumption 21
Power supply failure 21
Electrical connection 22
Potential equalization 24
Terminals 26
Cable entries 26
Cable specification 26

Performance characteristics 28
Reference operating conditions 28
Maximum measurement error 28
Repeatability 29
Influence of ambient temperature 29

Mounting procedure 29
Mounting location 29
Orientation 32
Inlet and outlet runs 33
Adapters 35
Length of connecting cable 35
Mounting the transmitter housing and external battery housing, Proline Promag 800 - Advanced 36
Special mounting instructions 36

Environment 38
Ambient temperature range 38
Storage temperature 39
Relative humidity 39
Operating height 39
Atmosphere 39
Degree of protection 39
Vibration-resistance and shock-resistance 40
Mechanical load 40
Electromagnetic compatibility (EMC) 40

Process 40
Medium temperature range 40
Conductivity 41
Pressure-temperature ratings 41
Pressure tightness 44
Flow limit 45
Pressure loss 45
System pressure 45
Vibrations 46
Corrosive environment 46

Custody transfer 47

Mechanical construction 47
Dimensions in SI units 47
Dimensions in US units 66
Weight 77
Measuring tube specification in SI units 78
Measuring tube specification in US units 79
Materials 80
Fitted electrodes 82
Process connections 82
Surface roughness 82

Operability 82
Local display 82
Operation 82
Digital communication 82
SmartBlue app 82

Certificates and approvals 83
CE mark 83
UKCA marking 83
RCM marking 83
Drinking water approval 83
Radio approval 83
Pressure Equipment Directive 83
Measuring instrument approval 83
External standards and guidelines 84

Ordering information 84

Application packages 84
Diagnostics functions 84
Heartbeat Technology 84

Accessories 85
Device-specific accessories 85
Service-specific accessories 87

Supplemental documentation 87
Standard documentation 87
Supplementary device-dependent documentation 88

Registered trademarks 88

About this document

Symbols

Electrical symbols

Symbol	Meaning
	Direct current
	Alternating current
	Direct current and alternating current
	**Ground connection** A grounded terminal which, as far as the operator is concerned, is grounded via a grounding system.
	**Potential equalization connection (PE: protective earth)** Ground terminals that must be connected to ground prior to establishing any other connections. The ground terminals are located on the interior and exterior of the device: ▪ Interior ground terminal: potential equalization is connected to the supply network. ▪ Exterior ground terminal: device is connected to the plant grounding system.

Symbols for certain types of information

Symbol	Meaning
	**Permitted** Procedures, processes or actions that are permitted.
	**Preferred** Procedures, processes or actions that are preferred.
	**Forbidden** Procedures, processes or actions that are forbidden.
	**Tip** Indicates additional information.
	Reference to documentation
	Reference to page
	Reference to graphic
	Visual inspection

Symbols in graphics

Symbol	Meaning
1, 2, 3, ...	Item numbers
1., 2., 3., ...	Series of steps
A, B, C, ...	Views
A-A, B-B, C-C, ...	Sections
	Hazardous area
	Safe area (non-hazardous area)
	Flow direction

Function and system design

Measuring principle

Following *Faraday's law of magnetic induction*, a voltage is induced in a conductor moving through a magnetic field.

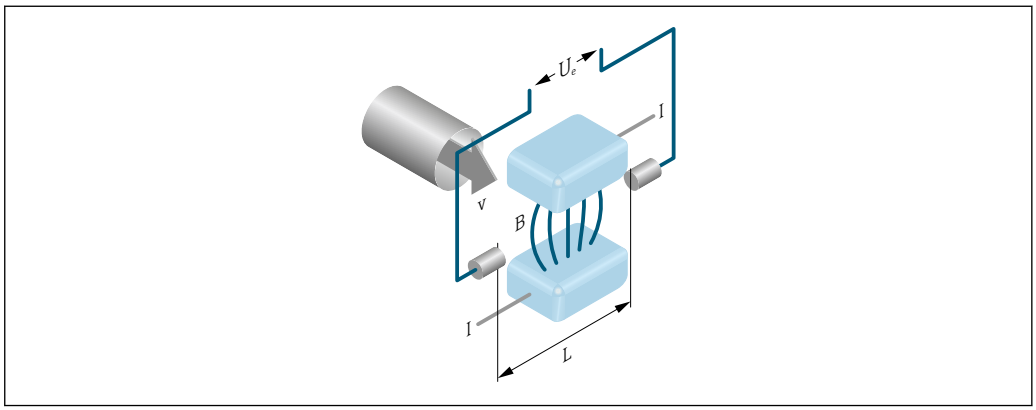

A0028962

Ue Induced voltage
B Magnetic induction (magnetic field)
L Electrode spacing
I Current
v Flow velocity

In the electromagnetic measuring principle, the flowing medium is the moving conductor. The voltage induced (U_e) is proportional to the flow velocity (v) and is supplied to the amplifier by means of two measuring electrodes. The flow volume (Q) is calculated via the pipe cross-section (A). The magnetic field is created through a switched direct current of alternating polarity.

Formulae for calculation

- Induced voltage $U_e = B \cdot L \cdot v$
- Volume flow $Q = A \cdot v$

Measuring system

The device consists of a transmitter and a sensor.

Proline Promag 800 - Standard
Compact version - transmitter and sensor form a mechanical unit.

Proline Promag 800 - Advanced
Two device versions are available:
- Compact version - transmitter and sensor form a mechanical unit.
- Remote version - transmitter and sensor are mounted in separate locations.

Transmitter

Proline 800 - Standard  A0043191	Housing versions and materials Compact version: round compact housing Polycarbonate plastic Configuration: Operation via SmartBlue app

Proline 800 - Advanced 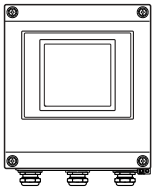 A0039369	Housing versions and materials ▪ Compact version: compact housing Polycarbonate plastic ▪ Remote version: wall-mount housing Polycarbonate plastic Configuration: Operation via SmartBlue app

Sensor

Promag W *Lap joint flange, lap joint flange, stamped plate or fixed flange with aluminum half-shell housing: DN 25 to 300 mm (1 to 12 in)* 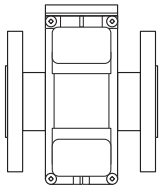 A0017040	▪ Nominal diameter range: DN 25 to 600 mm (1 to 24 in) ▪ Materials → 80
Fixed flange with fully welded housing made of carbon steel: DN 25 to 300 mm (1 to 12 in) 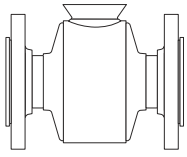 A0022673	

Fixed flange with fully welded housing made of carbon steel: DN 350 to 900 mm (14 to 36 in)

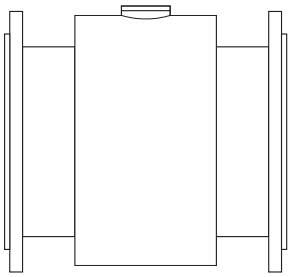

A0017041

Equipment architecture

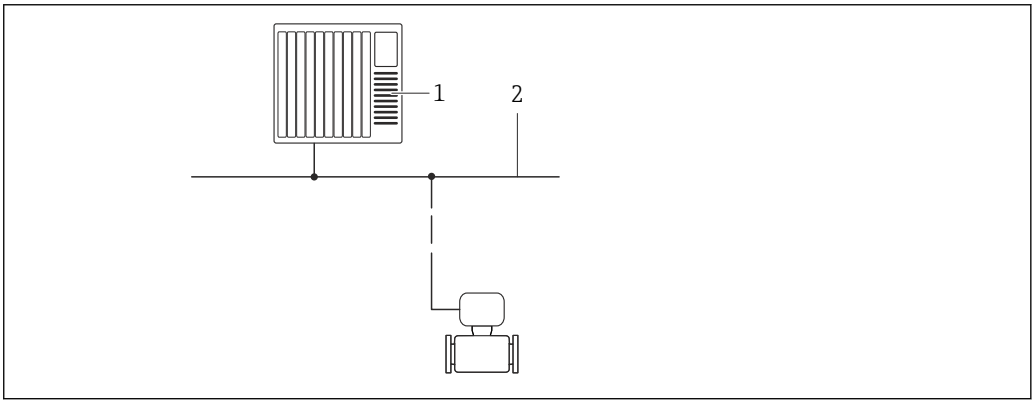

A0037850

1 *Possibilities for integrating measuring devices into a system*

1 *Control system (e.g. PLC)*
2 *Modbus RS485*

Cellular radio communication

Wireless transmission of information - Proline 800 - Advanced (optional)

Data can be transmitted from and to the measuring device via wireless communication. Ideal for applications in which the measuring point is installed in a very remote location.

Thanks to user-configurable monitoring of limit values with alerts, users can respond specifically to changes on site:
- Receipt of alerts
- Interrogation of totalizer readings
- Modification of the device configuration

- The data saved by the data logger are transmitted in a defined period.
- It is important to ensure that the signal of the cellular network is strong enough.

Cellular network

Data can be transmitted over a cellular network with the cellular radio module. It can be configured as a point-to-point connection or as freely accessible via the Internet/intranet.

The TLS encryption protocol is used for wireless communication between the Promag 800 and the MQTT broker.

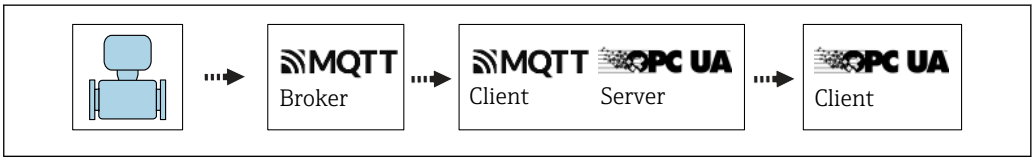

A0045349

2 *Cellular radio connection via MQTT broker, OPC-UA server and TLS encryption.*

An eSIM card from Endress+Hauser is integrated in the device for cellular radio operation. Alternatively, a SIM card from a local mobile network provider can also be inserted into the device. The communication is established via the data channel of the eSIM card or SIM card.

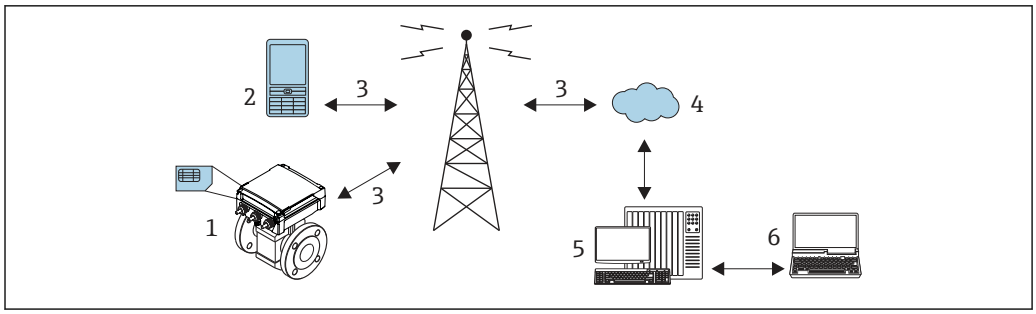

3 How the measuring device operates in the cellular network

1 Measuring device with SIM card
2 Cellular phone
3 Cellular network
4 Cloud
5 Web server (provider)
6 Laptop (customer)

Function	LPWAN: LTE Cat M1 (3GPP release 14) ▪ Maximum 375 kbps (download), maximum 1.12 Mbps (upload) (half-duplex) ▪ LTE FDD: B1/B2/B3/B4/B5/B8/B12/B13/B18/B19/B20/B25/B26/B27/B28/B66/B85
	LPWAN: LTE Cat NB1 (3GPP release 14) ▪ Maximum 32 kbps(download), maximum 70 kbps(upload) ▪ LTE FDD: B1/B2/B3/B4/B5/B8/B12/B13/B18/B19/B20/B25/B28/B66/B71/B85
	LPWAN: LTE Cat NB2 (3GPP Release 14) ▪ Maximum 136 kbps(download), maximum 150 kbps(upload) ▪ LTE FDD: B1/B2/B3/B4/B5/B8/B12/B13/B18/B19/B20/B25/B28/B66/B71/B85
	GPRS: ▪ Maximum 85.6 kbps(download), maximum 21.4 kbps(upload) (limited to multiSlot class 8) ▪ 850/900/1800/1900MHz
	EGPRS: EGPRS (EDGE) ▪ Maximum 236.8 kbps(download), maximum 59.2 kbps(upload) (limited to multiSlot class 8) ▪ 850/900/1800/1900MHz
Antenna	Manufacturer/model 2J antennas/2J2024B
SIM interface	1,8V 4FF nano SIM card and internal eUICC (M2M) (SIM PIN deactivated)

Custody transfer (optional)

The Promag W 800 is optionally tested in accordance with OIML R49 and has an EU type-examination certificate according to Measuring Instruments Directive 2014/32/EU (MID) for service subject to legal metrological control ("custody transfer") for cold water (Annex MI-001).

Deployment is with a legally controlled totalizer reading on the local display.

Measuring devices subject to legal metrological control totalize in both directions, i.e. all the outputs consider flow components in the positive (forward) and negative (reverse) flow direction.

Generally a measuring device subject to legal metrological control is secured against tampering by seals on the transmitter or sensor. These seals may normally only be opened by a representative of the competent authority for legal metrology controls.

Once the measuring device has been put into circulation or sealed, it can be operated only to a limited extent via the SmartBlue app or wireless communications systems.

Detailed ordering information is available from your local Endress+Hauser sales organization for national approvals as cold water meters based on OIML R49.

Reliability

IT security

Our warranty is valid only if the product is installed and used as described in the Operating Instructions. The product is equipped with security mechanisms to protect it against any inadvertent changes to the settings.

IT security measures, which provide additional protection for the product and associated data transfer, must be implemented by the operators themselves in line with their security standards.

Device-specific IT security

The device offers a range of specific functions to support protective measures on the operator's side. These functions can be configured by the user and guarantee greater in-operation safety if used correctly. The following list provides an overview of the most important functions:

Access via the SmartBlue app

Two access levels (user roles) are defined for the device: the Operator user role and the Maintenance user role. The Maintenance user role is the default setting.

If a user-specific access code is not defined (in the Enter access code parameter), the default setting **0000** continues to apply and the Maintenance user role is automatically enabled. The device's configuration data are not write-protected and can be edited at all times.

If a user-specific access code has been defined (in the Enter access code parameter), all the parameters are write-protected and the device is accessed with the Operator user role. The previously defined access code must first be entered again before the Maintenance user role is enabled and all the parameters can be write-accessed.

Protecting access via hardware write protection

Write access to the device parameters via the operating tool can be disabled by means of a write protection switch (DIP switch on the back of the local display). When hardware write protection is enabled, only read access to the parameters is possible.

Hardware write protection is disabled when the device is delivered.

Write protection via write protection switch

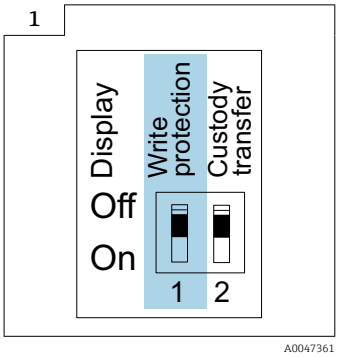

▶ Information regarding the write protection switch is provided on the connection nameplate in the connection compartment cover.

Unlike parameter write protection via a user-specific access code, this allows write access to the entire operating menu to be locked.

The parameter values are now read only and cannot be edited any more.

The following parameters can always be modified even if parameter write protection is activated:
- Enter access code
- Contrast display
- Clientt ID

▶ Set the write protection (WP) switch on the display module to the **ON** position.
↳ Hardware write protection is enabled.
In the **Locking status** parameter, the **Hardware locked** option is displayed.
On the local display, the 🔒 symbol appears in the header.

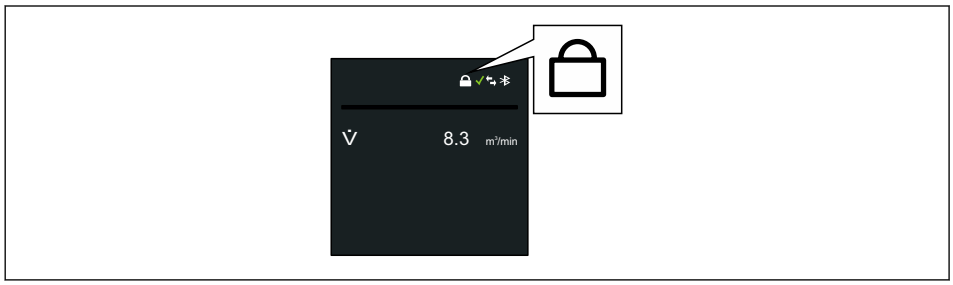

A0044218

Access via Bluetooth® wireless technology

Secure signal transmission via Bluetooth® wireless technology uses an encryption method tested by the Fraunhofer Institute.
- The device is not visible via *Bluetooth*® wireless technology without the SmartBlue App.
- Only one point-to-point connection is established between the device and a smartphone or tablet.
- It is possible to configure the *Bluetooth*® wireless technology interface in such a way that *Bluetooth*® is only active (the device is only then visible) if the display is activated onsite via Wake on Touch.

Input

Measured variable

Direct measured variables
- Volume flow (proportional to induced voltage)
- Electrical conductivity
- Pressure (optional)

Measuring range

Typically v = 0.01 to 10 m/s (0.03 to 33 ft/s) with the specified accuracy

Electrical conductivity: ≥ 20 µS/cm for liquids in general

Flow characteristic values in SI units

Nominal diameter		Recommended Flow rate	Factory settings	
		min./max. full scale value (v ~ 0.3/10 m/s)	Pulse value (~ 2 pulse/s)	Low flow cut off (v ~ 0.04 m/s)
[mm]	[in]	[m³/h]	[m³]	[m³/h]
25	1	9 to 300 dm³/min	0.5 dm³	1 dm³/min
32	–	15 to 500 dm³/min	1 dm³	2 dm³/min
40	1 ½	25 to 700 dm³/min	1.5 dm³	3 dm³/min
50	2	35 to 1 100 dm³/min	2.5 dm³	5 dm³/min
65	–	60 to 2 000 dm³/min	5 dm³	8 dm³/min
80	3	90 to 3 000 dm³/min	5 dm³	12 dm³/min
100	4	145 to 4 700 dm³/min	10 dm³	20 dm³/min

Nominal diameter		Recommended Flow rate	Factory settings	
		min./max. full scale value (v ~ 0.3/10 m/s)	Pulse value (~ 2 pulse/s)	Low flow cut off (v ~ 0.04 m/s)
[mm]	[in]	[m³/h]	[m³]	[m³/h]
125	–	220 to 7 500 dm³/min	15 dm³	30 dm³/min
150	6	20 to 600	0.025	2.5
200	8	35 to 1 100	0.05	5
250	10	55 to 1 700	0.05	7.5
300	12	80 to 2 400	0.1	10
350	14	110 to 3 300	0.1	15
375	15	140 to 4 200	0.15	20
400	16	140 to 4 200	0.15	20
450	18	180 to 5 400	0.25	25
500	20	220 to 6 600	0.25	30
600	24	310 to 9 600	0.3	40
700	28	420 to 13 500	0.5	50
750	30	480 to 15 000	0.5	60
800	32	550 to 18 000	0.75	75
900	36	690 to 22 500	0.75	100

Flow characteristic values in US units

Nominal diameter		Recommended Flow rate	Factory settings	
		min./max. full scale value (v ~ 0.3/10 m/s)	Pulse value (~ 2 pulse/s)	Low flow cut off (v ~ 0.04 m/s)
[in]	[mm]	[gal/min]	[gal]	[gal/min]
1	25	2.5 to 80	0.2	0.25
–	32	4 to 130	0.2	0.5
1 ½	40	7 to 185	0.5	0.75
2	50	10 to 300	0.5	1.25
–	65	16 to 500	1	2
3	80	24 to 800	2	2.5
4	100	40 to 1 250	2	4
–	125	60 to 1 950	5	7
6	150	90 to 2 650	5	12
8	200	155 to 4 850	10	15
10	250	250 to 7 500	15	30
12	300	350 to 10 600	25	45
14	350	500 to 15 000	30	60
15	375	600 to 19 000	50	60
16	400	600 to 19 000	50	60
18	450	800 to 24 000	50	90
20	500	1 000 to 30 000	75	120
24	600	1 400 to 44 000	100	180

Nominal diameter		Recommended Flow rate	Factory settings	
		min./max. full scale value (v ~ 0.3/10 m/s)	Pulse value (~ 2 pulse/s)	Low flow cut off (v ~ 0.04 m/s)
[in]	[mm]	[gal/min]	[gal]	[gal/min]
28	700	1 900 to 60 000	125	210
30	750	2 150 to 67 000	150	270
32	800	2 450 to 80 000	200	300
36	900	3 100 to 100 000	225	360

Recommended measuring range

Flow limit → 📄 45

For custody transfer, the applicable approval determines the permitted measuring range, the pulse value and the low flow cut off.

Operable flow range

Over 1000 : 1

In the case of custody transfer, the applicable approval determines the permitted operable flow range.

Input signal

External measured values

Digital communication

The measured values can be written by the automation system via:
Modbus RS485

Status input

Maximum input values	▪ DC 30 V ▪ 6 mA
Response time	Configurable: 50 to 200 ms
Input signal level	▪ Low signal (low): DC −3 to +5 V ▪ High signal (high): DC 12 to 30 V
Assignable functions	▪ Off ▪ Reset totalizers 1-3 separately ▪ Reset all totalizers ▪ Logbook entry only

Status input, power save mode

To activate the status input, the signal must change from low level to high level with a maximum rise time of 10 ms and the high level must be present for at least the duration of the response time. The input signal can then be set back to "low" again. After this, the status input is ready for another activation.

Output

Output signal

Status/pulse output

Function	**Proline Promag 800 - Standard** ▪ With the order code for "Output; Input", option **K**: 3 outputs can be set either as a pulse output or switch output ▪ With the order code for "Output; Input", option **N**: Modbus RS485, 3 outputs can be set either as a pulse output or switch output **Proline Promag 800 - Advanced** ▪ With the order code for "Output; Input", option **I**: 3 outputs can be set either as a pulse output or switch output ▪ With the order code for "Output; Input", option **M**: Modbus RS485, 3 outputs can be set either as a pulse output or switch output ▪ With the order code for "Output; Input", option **P**: cellular radio, 3 outputs can be set either as a pulse output or switch output
Version	Passive, open collector
Maximum input values	▪ DC 30 V ▪ 30 mA
Voltage drop	At 25 mA: ≤ DC 2 V
Pulse output	
Pulse width	Configurable: 0.1 to 500 ms
Maximum pulse rate	100 Impulse/s
Pulse value	Configurable
Assignable measured variables	Volume flow
Switch output	
Switching behavior	Binary, conductive or non-conductive
Number of switching cycles	Unlimited

Assignable functions	▪ Off
	▪ On
	▪ Diagnostic behavior
	▪ Limit value:
	  ▪ Off
	  ▪ VolumeFlow
	  ▪ FlowVelocity
	  ▪ Conductivity
	  ▪ Totalizer 1
	  ▪ Totalizer 2
	  ▪ Totalizer 3
	  ▪ Temperature
	  ▪ Pressure
	  ▪ BatteryLevel
	▪ Flow direction monitoring
	▪ Status
	  ▪ Empty pipe detection
	  ▪ Low flow cut off

Status output, power save mode	
	An active status output is not permanently conductive. Rather, it is only conductive for the length of the pulse width at a repeat rate that corresponds to the device measurement interval.

Modbus RS485

Physical interface	In accordance with EIA/TIA-485-A standard

Signal on alarm

Depending on the interface, failure information is displayed as follows.

Status/pulse output

Status/pulse output	
Failure mode	No pulses

Modbus RS485

Failure mode	Choose from: ▪ NaN value instead of current value ▪ Last valid value

Local display

Plain text display	With information on the cause

Interface/protocol

Via digital communication:
- SmartBlue App
- Modbus RS485

Plain text display	With information on cause and remedial measures

Additional information on remote operation → 82

Low flow cut off

The switch points for low flow cut off are user-selectable.

Galvanic isolation

The following circuits are galvanically isolated from one another:
- Inputs
- Outputs
- Optional power supply with the order code for "Energy supply", option K "100-240VAC/19-30VDC, lithium battery" and option S "100-240VAC/19-30VDC, w/o battery"

Protocol-specific data

Modbus RS485

Protocol	Modbus Applications Protocol Specification V1.1
Device type	Slave
Slave address range	1 to 247
Function codes	▪ 03: Read holding register ▪ 04: Read input register ▪ 06: Write single registers ▪ 08: Diagnostics ▪ 16: Write multiple registers ▪ 23: Read/write multiple registers
Broadcast messages	Supported by the following function codes: ▪ 06: Write single registers ▪ 16: Write multiple registers ▪ 23: Read/write multiple registers
Supported baud rate	▪ 1 200 BAUD ▪ 2 400 BAUD ▪ 4 800 BAUD ▪ 9 600 BAUD ▪ 19 200 BAUD ▪ 38 400 BAUD ▪ 57 600 BAUD ▪ 115 200 BAUD

Data transfer mode	RTU
Data access	Each device parameter can be accessed via Modbus RS485. For Modbus register information

Modbus RS485 power save mode

If the device is not powered via an external mains voltage (only possible with order code for "Energy supply", option K "100-240VAC/ 19-30VDC, lithium battery" and option S "100-240VAC/19-30VDC, w/o battery"), the Modbus-RS485 circuit on the transmitter, i.e. the slave, is deactivated between two communication cycles in order to save energy. To activate the circuit and communicate with the slave, a retry function must be provided in the Modbus master which resends a telegram to the slave if no response is received. In addition, DIP switch A on the electronics module must be set to "ON". → 9

The first telegram sent by the master first activates the Modbus RS485 circuit on the slave. After a certain period of time, specified by the master, in which the slave does not send a reply, the master sends a retry message with the same content. The slave can interpret and reply to this telegram. The Modbus-RS485 circuit is deactivated again afterwards.

This approach is particularly suitable for low data throughput rates and point-to-point connections. Power supply via the mains voltage is recommended for high data throughput rates and bus networks.

Data logger

The data logger logs up to 10,000 (optionally 50,000) protocol data records. A log entry consists of a time stamp and the configured values.

The data logger logs the following values:
- Volume flow
- Pressure
- Electrical conductivity
- Totalizer 1
- Totalizer 2
- Totalizer 3
- Battery charge state
- System diagnostics status

The logging cycle (hours:minutes:seconds) applies for all values to be logged. If no logging cycle is selected, the data logger is switched off and does not log any more data.

It is possible to access the data logger locally via the SmartBlue app or via a cloud-based application for data analysis.

Power supply

Pin assignment, Proline 800 - Standard

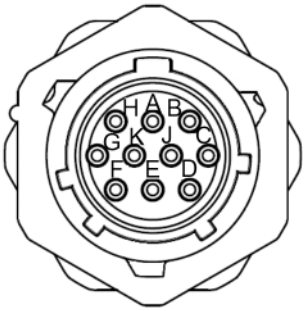

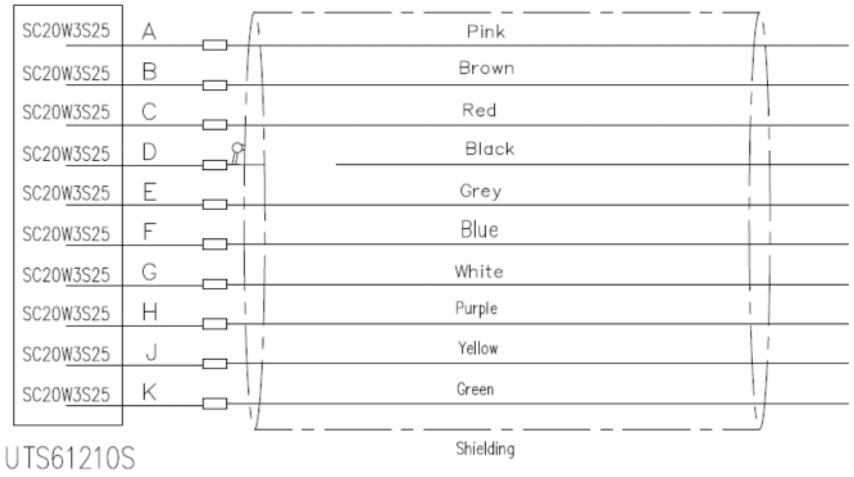

Pin	Function
A	PSO1+ (pulse/status output 1+)
B	COM (reference potential pulse/status outputs)
C	NC (not connected)
D	Earth
E	RS485_+ (Modbus B)
F	RS485_- (Modbus A)
G	PSO3+ (pulse/status output 3+)
H	PSO2+ (pulse/status output 2+)
J	NC (not connected)
K	NC (not connected)

Connection methods available Outputs	Possible options for order code
Pin	**"Electrical connection"** Option **E**: MIL-DTL-26482 plug The connector solution on the Promag 800 with standard transmitter ensures IP68 protection in both the plugged-in and disconnected state on the socket side. This plastic connector solution is fully compatible with MIL-DTL-26482 Series I. Mixing it with MIL-DTL-26482 Series I (metal) and the plastic version does not ensure compliance with the IP68, type 6P protection class.

Terminal assignment, Proline 800 - Advanced

Transmitter

Connection methods available		Possible options for order code
Outputs	**Power supply**	
Terminals	Terminals	**"Electrical connection"** ▪ Option **A**: coupling M20x1 ▪ Option **B**: thread M20x1 ▪ Option **C**: thread G ½" ▪ Option **D**: thread NPT ½"

Supply voltage

Order code for "Power supply"	Terminal numbers	Terminal voltage		Frequency range
Option **K**, **S**	1 (L+/L), 2 (L-/N)	DC 24 V	−20 to +25 %	–
		AC 100 to 240 V	−15 to +10 %	50/60 Hz, ±3 Hz

Order code for "Output" and "Input"	Terminal numbers			
	20	**21**	**22**	**23**
Option **I, K, M, N, P**	Pulse-/ switch output 2	Pulse-/ switch output 3	Pulse-/ switch output 1	Common reference potential (COM)

If a status input is also connected, the following terminals must be assigned, which are located on the second terminal block of the IO board:

Order code for "Output" and "Input"	Terminal numbers	
	24	**25**
Option **I, M, P**	Positive terminal status input	Negative terminal status input

Signal transmission Modbus RS485

Order code for "Output" and "Input"	Terminal numbers	
	26 (+)	**27 (-)**
Option **M**	B	A

Remote version

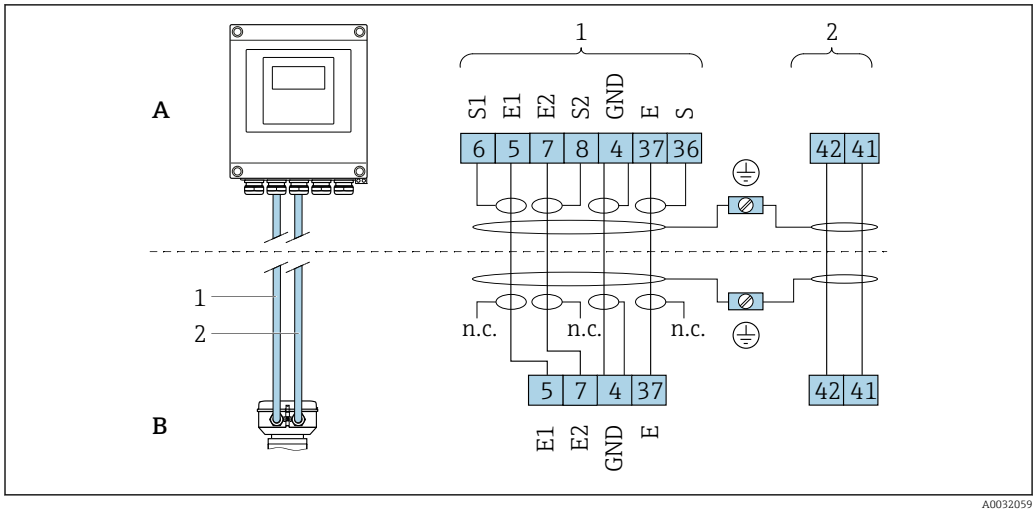

4 *Remote version terminal assignment*

A Transmitter wall-mount housing
B Sensor connection housing
1 Electrode cable
2 Coil current cable
n.c. Not connected, insulated cable shields

Terminal No. and cable colors: 6/5 = brown; 7/8 = white; 4 = green; 36/37 = yellow

Supply voltage

Supply voltage via batteries

- 3.6 V DC
- 38 Ah at 25 °C(per battery pack)
- Maximum power: 500 mW

Supply voltage via external battery housing - Proline Promag 800 - Advanced (optional)

Order code for "Accessory enclosed", option "External battery housing without a battery", option "PG".
- Maximum power: 3.5 W
- Interface is designed for connection of an additional external battery supply to increase the service life.
- Two internal battery packs
- The battery life display refers to the internally installed battery packs.

Supply voltage via external power supply - Proline Promag 800 - Advanced (optional)

Order code for "Power supply", options "K", "S"
- 85 to 265 V AC/ 19 to 30 V DC [1)]
- 47 to 63 Hz
- Maximum power: 4 W
- Two battery packs to back up the device supply if the external mains power supply fails

Temporary overvoltage	up to the levels of overvoltage category II
Short-term temporary overvoltages between line and neutral conductor	up to 1200 V for a maximum of 5 s
Permanent temporary overvoltage between line and earth	up to 500 V

Battery concept

Battery configuration options

The following configurations of power sources are possible:

1) These values are absolute minimum and maximum values. No tolerance applies. The DC power unit must be safety-tested (e.g. PELV, SELV) with transients of less than 700 Vp.

Proline Promag 800 - Standard
1 LTC [2] battery pack, order code for "Power supply", option H

Proline Promag 800 - Advanced
2 LTC [2] battery packs and 1 buffer capacitor [3], order code for "Energy supply", option H and K

LTC battery specifications

- High-power lithium-thionyl chloride battery (size D)
- 3.6 V DC
- Not rechargeable
- 38 Ah nominal capacity at 25 °C (per battery pack)

High-power lithium-thionyl chloride batteries are listed under Hazard Class 9:

Miscellaneous Hazardous Materials.

Observe the hazardous materials regulations described in the Safety Datasheet.

The Safety Datasheet can be requested from any Endress+Hauser sales organization.

Buffer capacitor specifications

- Lithium hybrid layer capacitor
- 3.7 V DC
- 155 mAh nominal capacity at 25 °C

Lithium hybrid layer capacitors are listed under Hazard Class 9:

Miscellaneous Hazardous Materials.

Observe the hazardous materials regulations described in the Safety Datasheet.

The Safety Datasheet can be requested from any Endress+Hauser sales organization.

2) Lithium-thionyl chloride
3) Lithium-hybrid-layer capacitor

Estimated battery lifetime

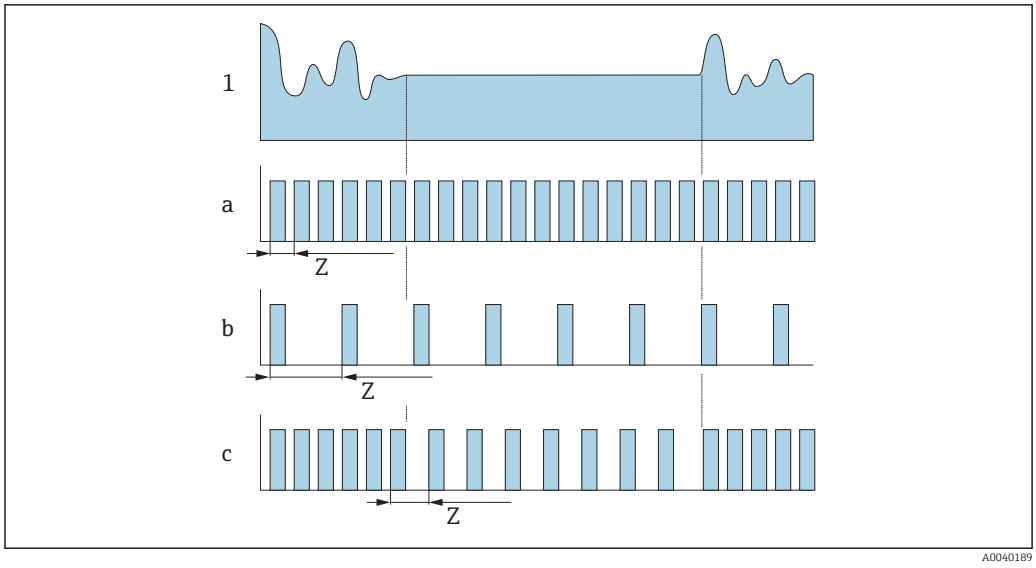

5 Operating principle of various data logging methods

1 Flow profile
a Minimum measuring interval value (external power supply)
b Fixed measuring interval value between the sensor-dependent minimum and 60 seconds
c Intelligent adaptation
Z Measuring interval value

With an external power supply, the device operates in continuous measuring mode. The measurement interval value is automatically set to the minimum value that is technically possible.

Measuring interval value

The measuring interval is specified in the "Measuring interval value" parameter. This option is recommended to optimize battery lifetime.

Enter the value for the measuring interval. Additional information: To increase battery life, set as long an interval as possible. To optimize the measuring result, set as short an interval as possible.

Intelligent adaptation

Under normal process conditions, the measuring device measures according to the measuring interval specified in the "Measuring interval value" parameter. If the process conditions change, the measuring device measures in shorter intervals according to the usage rate specified in the "Energy budget intelligent adaption" parameter. This option is recommended to optimize the measuring result.

To calculate the estimated battery life, use the Applicator → 87.

Nominal estimated battery lifetime - Proline 800

Sensor	Transmitter with Modbus, pulse
DN 15 to 300	10 years
DN 350 to 600	8 years
DN 700 to 1200	4 Jahre

Test conditions:
- A full battery pack
- EFM measuring interval: 15 seconds (for a fixed measuring interval value. For intelligent adaptation: consider the influence of the settings in the Applicator.)
- Display: 60s @ 1 day

- An active pulse output with 2 Hz @ 5 ms
- Modbus transmission interval: 15 seconds
- Ambient temperature: 25 °C (77 °F)

The battery lifetime is significantly shortened by:
- Shortening the EFM measuring interval
- Frequently activating the display
- Decreasing the pulse value of the pulse outputs
- Increasing the pulse width of the pulse outputs
- Shortening the Modbus transmission interval
- Operating at ambient temperatures < 0 °C (32 °F) and > 40 °C (104 °F)

Nominal estimated battery lifetime - Proline 800 Advanced

Sensor	Transmitter with cellular radio	Transmitter with Modbus, pulse
DN 15 to 300	10 years	15 years
DN 350 to 600	8 years	12 years
DN 700 to 1200	5 Jahre	7 Jahre

Test conditions:
- Two full battery packs
- EFM measuring interval: 15 seconds (for a fixed measuring interval value. For intelligent adaptation: consider the influence of the settings in the Applicator.)
- Display: 60s @ 1 day, background lighting 30%
- An active pulse output with 2 Hz @ 5 ms
- Modbus transmission interval: 15 seconds
- RF module transmission interval: 1 day
- Data logger interval: 15 minutes
- External pressure sensor
- Ambient temperature: 25 °C (77 °F)

The battery lifetime is significantly shortened by:
- Shortening the EFM measuring interval
- Frequently activating the display
- Increasing the setting for the background lighting
- Decreasing the pulse value of the pulse outputs
- Increasing the pulse width of the pulse outputs
- Shortening the Modbus transmission interval
- Shortening the RF module transmission interval
- Shortening the data logger interval
- Operating at ambient temperatures < 0 °C (32 °F) and > 40 °C (104 °F)

Power consumption

Switch-on current:
- Maximum 30 A (< 5 ms) at 230 V_{AC}
- Maximum 3 A (< 5 ms) at 24 V_{DC}

Device fuse

Fine-wire fuse (slow-blow) T1A

Current consumption

Order code for "Power supply"	Maximum current consumption
Option **K**: 100-240VAC/19-30VDC, lithium battery	300 mADC
Option **S**: 100-240VAC/19-30VDC, w/o lithium battery	

Power supply failure

The batteries act as a power supply back-up if the measuring device is being powered externally and a power failure occurs.

Electrical connection

Remote version connection

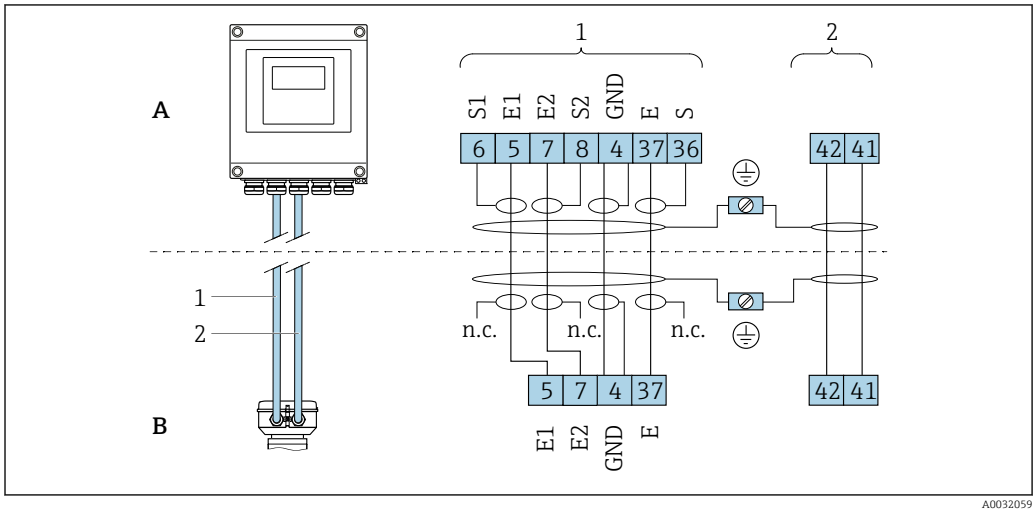

6 *Remote version terminal assignment*

A Transmitter wall-mount housing
B Sensor connection housing
1 Electrode cable
2 Coil current cable
n.c. Not connected, insulated cable shields

Terminal No. and cable colors: 6/5 = brown; 7/8 = white; 4 = green; 36/37 = yellow

Terminal connection for transmitter

Terminal assignment→ 17

Proline 800 - Standard

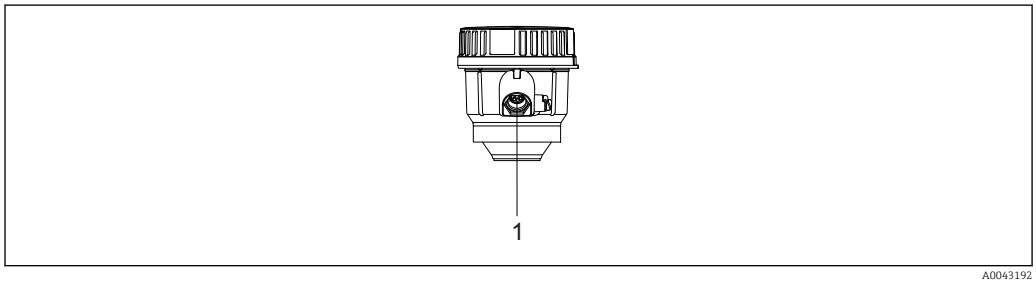

1 Terminal connection for signal transmission, input/output

Proline 800 - Advanced

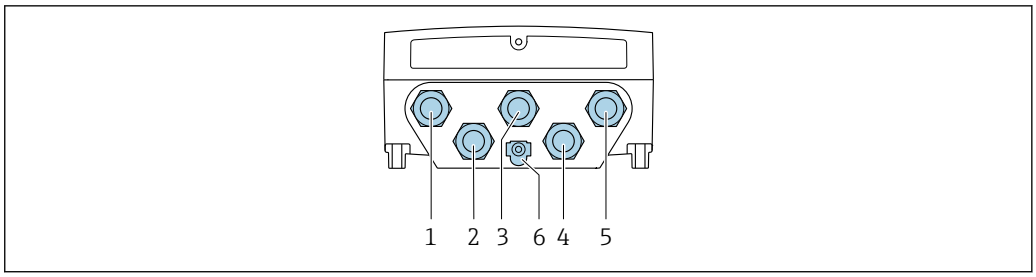

A0028200

1 Terminal connection for supply voltage
2 Terminal connection for connecting cable between sensor and transmitter
3 Terminal connection for connecting cable between sensor and transmitter
4 Terminal connection for signal transmission, input/output, pressure measuring cell
5 Terminal connection for signal transmission, input/output; optional: connection of external cellular radio antenna
6 Terminal connection for potential equalization (PE)

Connection examples

Pulseoutput

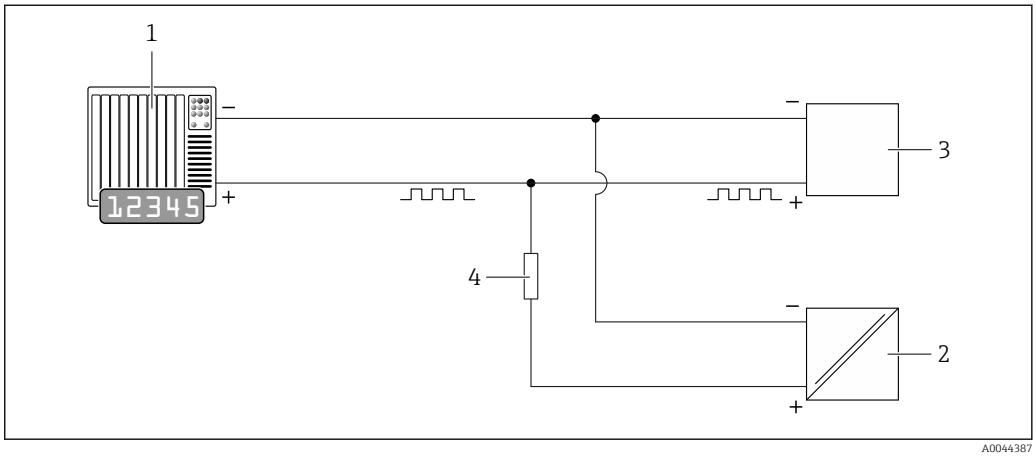

A0044387

7 *Connection example for pulse output (passive)*

1 Automation system with pulse input (e.g. PLC)
2 External DC power supply (e.g. 24 VDC)
3 Open-collector pulse input of transmitter: Observe input values
4 Pull-up resistor (e.g. 10 kOhm)

Modbus RS485

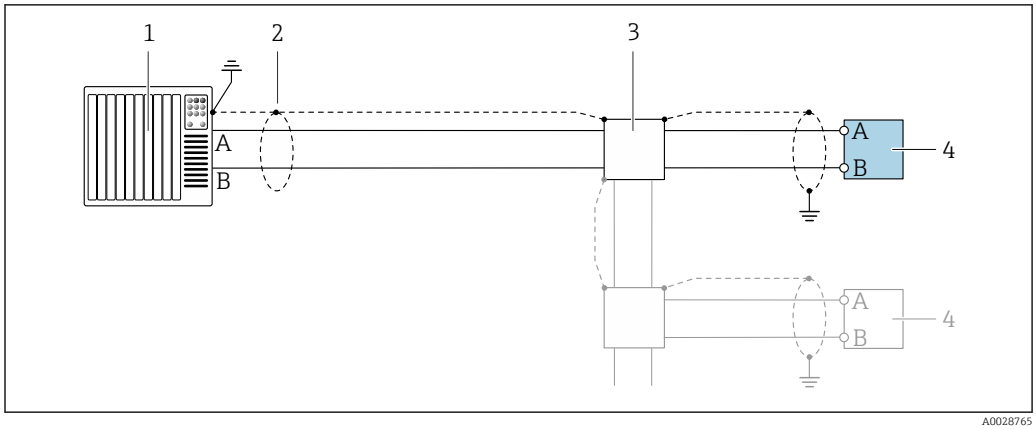

8 Connection example for Modbus RS485, non-hazardous area

1 Control system (e.g. PLC)
2 Ground cable shield at one end. The cable shield must be grounded at both ends to comply with EMC requirements; observe cable specifications → 26
3 Distribution box (optional)
4 Transmitter

Potential equalization

Introduction

Correct potential equalization (equipotential bonding) is a prerequisite for stable and reliable flow measurement. Inadequate or incorrect potential equalization can result in device failure and present a safety hazard.

The following requirements must be observed to ensure correct, trouble-free measurement:
- The principle that the medium, the sensor and the transmitter must be at the same electrical potential applies.
- Take in-company grounding guidelines, materials and the grounding conditions and potential conditions of the pipe into consideration.
- The necessary potential equalization connections must be established using a ground cable with a minimum cross-section of 6 mm^2 (0.0093 in^2) and a cable lug.
- In the case of remote device versions, the ground terminal in the example always refers to the sensor and not to the transmitter.

You can order accessories such as ground cables and ground disks directly from Endress+Hauser

Abbreviations used

- PE (Protective Earth): potential at the protective earth terminals of the device
- P_P (Potential Pipe): potential of the pipe, measured at the flanges
- P_M (Potential Medium): potential of the medium

Connection examples for standard situations

Unlined and grounded metal pipe

- Potential equalization is via the measuring pipe.
- The medium is set to ground potential.

Starting conditions:
- Pipes are correctly grounded on both sides.
- Pipes are conductive and at the same electrical potential as the medium

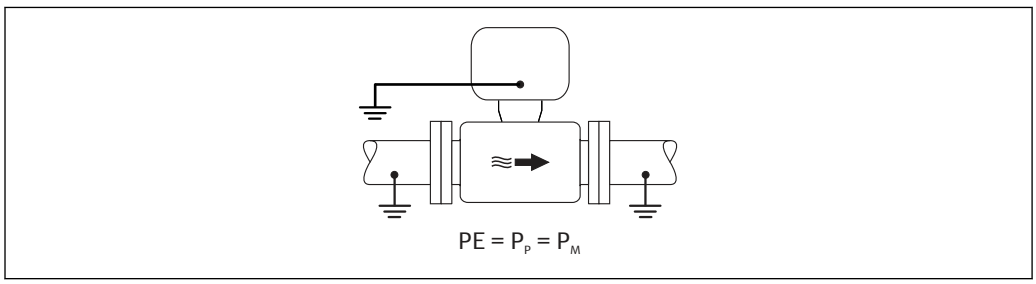

- ▶ Attach the connection housing of the transmitter or sensor to ground potential by means of the ground terminal provided for this purpose.

Metal pipe without liner

- Potential equalization is via the ground terminal and pipe flanges.
- The medium is set to ground potential.

Starting conditions:
- Pipes are not sufficiently grounded.
- Pipes are conductive and at the same electrical potential as the medium

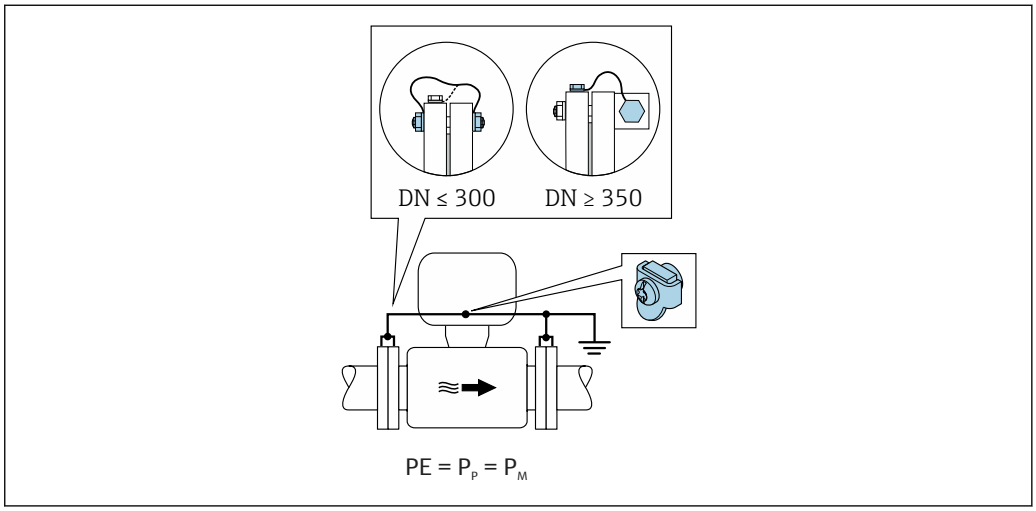

A0042089

1. Connect both sensor flanges to the pipe flange via a ground cable and ground them.
2. Attach the connection housing of the transmitter or sensor to ground potential by means of the ground terminal provided for this purpose.
3. For DN ≤ 300 (12"): Mount the ground cable directly on the conductive flange coating of the sensor with the flange screws.
4. For DN ≥ 350 (14"): Mount the ground cable directly on the metal transport bracket. Observe the screw tightening torques: see the Brief Operating Instructions for the sensor.

Plastic pipe or pipe with insulating liner

- Potential equalization is via the ground terminal and ground disks.
- The medium is set to ground potential.

Starting conditions:
- The pipe has an insulating effect.
- Low-impedance medium grounding close to the sensor is not guaranteed.
- Equalizing currents through the medium cannot be ruled out.

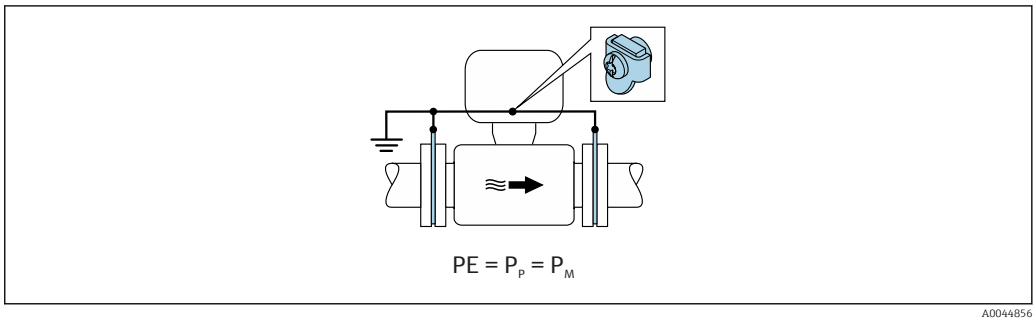

A0044856

1. Connect the ground disks to the ground terminal of the transmitter or sensor connection housing via the ground cable.
2. Connect the connection to ground potential.

Connection example with the potential of medium not equal to protective ground

In these cases, the medium potential can differ from the potential of the device.

Metal, ungrounded pipe

The sensor and transmitter are installed in a way that provides electrical insulation from PE, e.g. applications for electrolytic processes or systems with cathodic protection.

Starting conditions:
- Unlined metal pipe
- Pipes with an electrically conductive liner

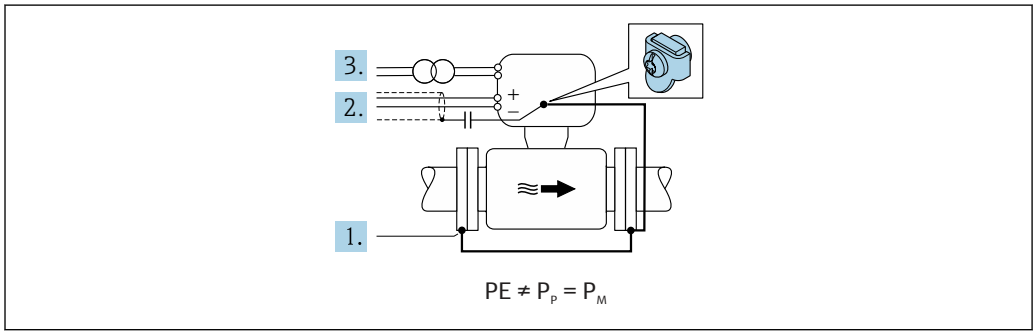

A0042253

1. Connect the pipe flanges and transmitter via the ground cable.
2. Route the shielding of the signal lines via a capacitor (recommended value 1.5µF/50V).
3. Device connected to power supply such that it is floating in relation to the protective earth (isolation transformer). This measure is not required in the case of 24V DC supply voltage without PE (= SELV power unit).

Terminals

Spring terminals for wire cross-sections 0.5 to 2.5 mm^2 (20 to 14 AWG)

Cable entries

Cable entry thread
- NPT ½"
- G ½"

Cable gland
- For standard cable: M20 × 1.5 with cable ϕ6 to 12 mm (0.24 to 0.47 in)
- For armored cable: M20 × 1.5 with cable ϕ9.5 to 16 mm (0.37 to 0.63 in)

If metal cable entries are used, use a grounding plate.

Cable specification

Permitted temperature range
- The installation guidelines that apply in the country of installation must be observed.
- The cables must be suitable for the minimum and maximum temperatures to be expected.

Power supply cable (incl. conductor for the inner ground terminal)

Standard installation cable is sufficient.

Signal cable

Pulse /switch output

Standard installation cable is sufficient.

Modbus RS485

The EIA/TIA-485 standard specifies two types of cable (A and B) for the bus line which can be used for every transmission rate. Cable type A is recommended.

Cable type	A
Characteristic impedance	135 to 165 Ω at a measuring frequency of 3 to 20 MHz

Cable capacitance	< 30 pF/m
Wire cross-section	> 0.34 mm² (22 AWG)
Cable type	Twisted pairs
Loop resistance	≤110 Ω/km
Signal damping	Max. 9 dB over the entire length of the cable cross-section
Shield	Copper braided shielding or braided shielding with foil shield. When grounding the cable shield, observe the grounding concept of the plant.

Connecting cable for remote version

Electrode cable

Standard cable	3 ×0.38 mm² (20 AWG) with common, braided copper shield (φ ~9.5 mm (0.37 in)) and individual shielded cores
Cable for empty pipe detection (EPD)	4 ×0.38 mm² (20 AWG) with common, braided copper shield (φ ~9.5 mm (0.37 in)) and individual shielded cores
Conductor resistance	≤50 Ω/km (0.015 Ω/ft)
Capacitance: core/shield	≤420 pF/m (128 pF/ft)
Operating temperature	–25 to +70 °C (–13 to +158 °F)

Coil current cable

Standard cable	3 ×0.75 mm² (18 AWG) with common, braided copper shield (φ ~9 mm (0.35 in))
Conductor resistance	≤37 Ω/km (0.011 Ω/ft)
Capacitance: core/core, shield grounded	≤120 pF/m (37 pF/ft)
Operating temperature	–25 to +70 °C (–13 to +158 °F)
Test voltage for cable insulation	≤ AC 1433 V rms 50/60 Hz or ≥ DC 2026 V

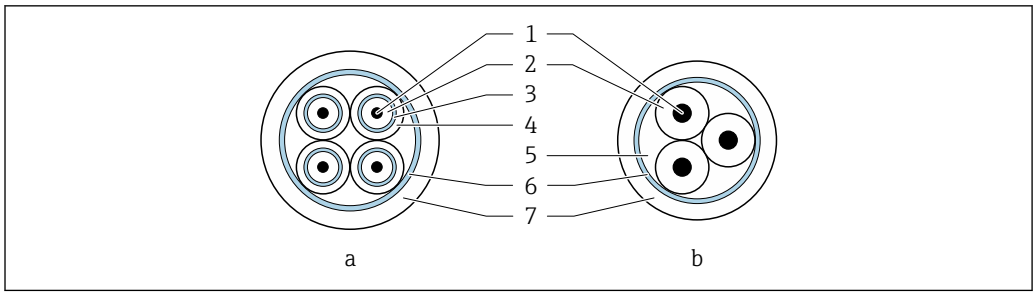

9 *Cable cross-section*

a Electrode cable
b Coil current cable
1 Core
2 Core insulation
3 Core shield
4 Core jacket
5 Core reinforcement
6 Cable shield
7 Outer jacket

A connecting cable can be ordered from Endress+Hauser for IP68:
- Pre-terminated cables that are already connected to the sensor
- Pre-terminated cables, where the cables are connected by the customer onsite (incl. tools for sealing the connection compartment)

Armored connecting cable

Armored connecting cables with an additional, reinforcing metal braid should be used:
- When laying the cable directly in the ground
- Where there is a risk of damage from rodents
- If using the device below IP68 degree of protection

Armored connecting cables with an additional, reinforcing metal braid can be ordered from Endress+Hauser .

Operation in environments with strong electrical interference

The measuring system meets the general safety requirements → 84 and EMC specifications → 40.

Grounding is by means of the ground terminal provided for the purpose inside the connection housing. The stripped and twisted lengths of cable shield to the ground terminal must be as short as possible.

The selection of a sensor with a steel housing is recommended for use in the vicinity of electrical power supply lines with strong currents.

Performance characteristics

Reference operating conditions

- Error limits following DIN EN 29104, in future ISO 20456
- Water, typically: +15 to +45 °C (+59 to +113 °F); 0.5 to 7 bar (73 to 101 psi)
- Data as indicated in the calibration protocol
- Accuracy based on accredited calibration rigs according to ISO 17025

Maximum measurement error

Error limits under reference operating conditions

o.r. = of reading

Volume flow

±0.5 % o.r. ± 2 mm/s (0.08 in/s)

Fluctuations in the supply voltage do not have any effect within the specified range.

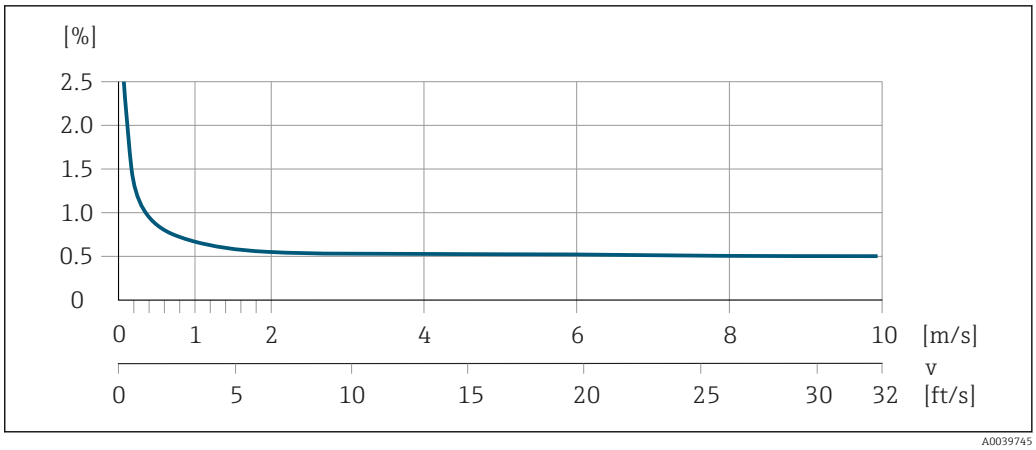

10 Maximum measurement error in % o.r.

Electrical conductivity
Maximum measurement error not specified.

Pressure
- Pressure range, absolute [bar (psi)]
  0.01 (0.1) ≤ p ≤ 8 (116)
  8 (116) ≤ p ≤ 40 (580)
- Measurement error, absolute
  ±0.5 % of 8 bar (116 psi)
  ±0.5 % o.r.

Accuracy of outputs

The outputs have the following base accuracy specifications.

Pulse output

o.r. = of reading

Accuracy	Max. ±50 ppm o.r. (over the entire ambient temperature range)

Repeatability

o.r. = of reading

Volume flow
Max. ±0.2 % o.r. ± 2 mm/s (0.08 in/s)

Electrical conductivity
Max. ±5 % o.r.

Influence of ambient temperature

Pulse output

Temperature coefficient	No additional effect. Included in accuracy.

Mounting procedure

Mounting location

- Do not install the device at the highest point of the pipe.
- Do not install the device upstream from a free pipe outlet in a down pipe.

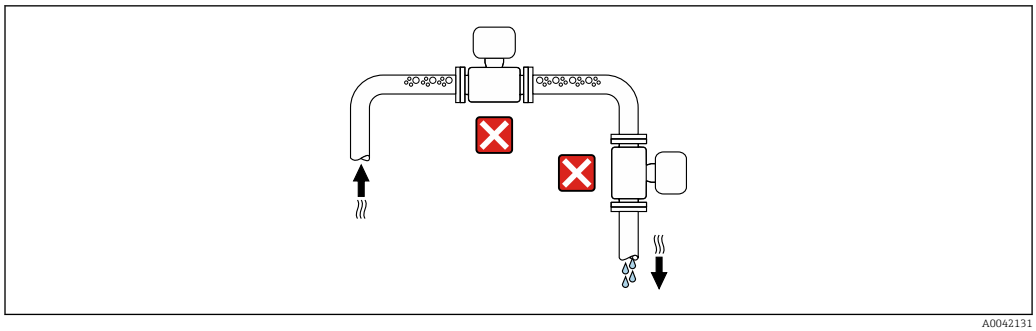

A0042131

The device should ideally be installed in an ascending pipe.

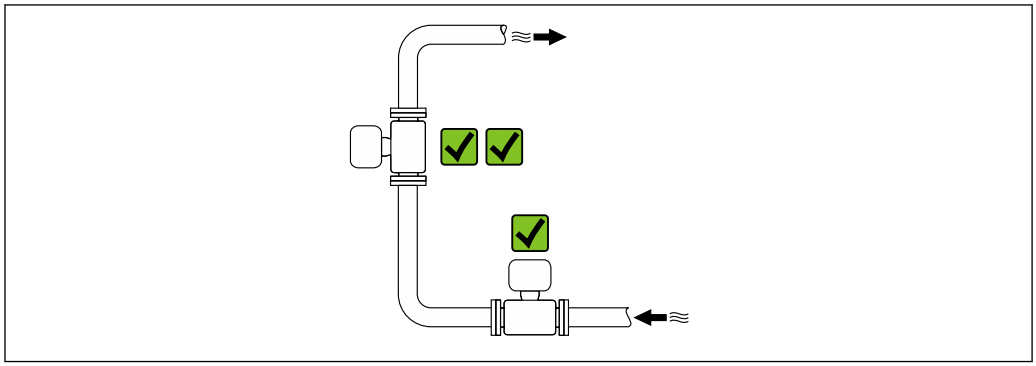

A0042317

Installation near valves

Install the device in the direction of flow upstream from the valve.

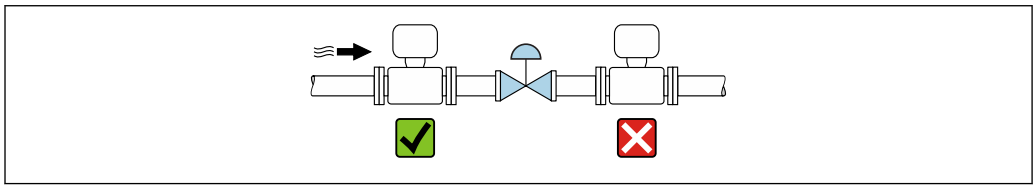

A0041091

Installation upstream from a down pipe

NOTICE

Negative pressure in the measuring pipe can damage the liner!

- If installing upstream of down pipes whose length h ≥ 5 m (16.4 ft): install a siphon with a vent valve downstream of the device.

This arrangement prevents the flow of liquid stopping in the pipe and air entrainment.

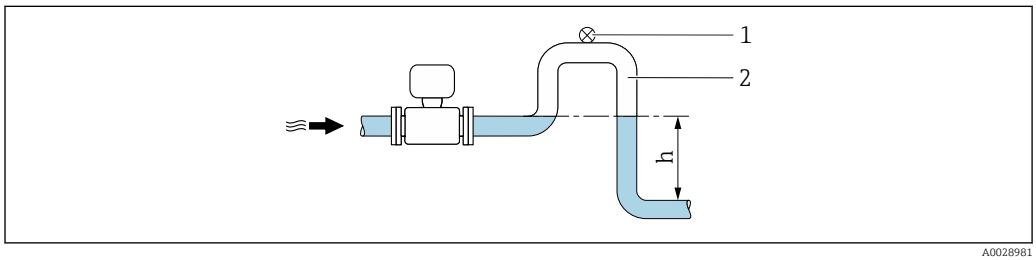

A0028981

1 *Vent valve*
2 *Pipe siphon*
h *Length of down pipe*

Installation with partially filled pipes

- Partially filled pipes with a gradient require a drain-type configuration.
- The installation of a cleaning valve is recommended.

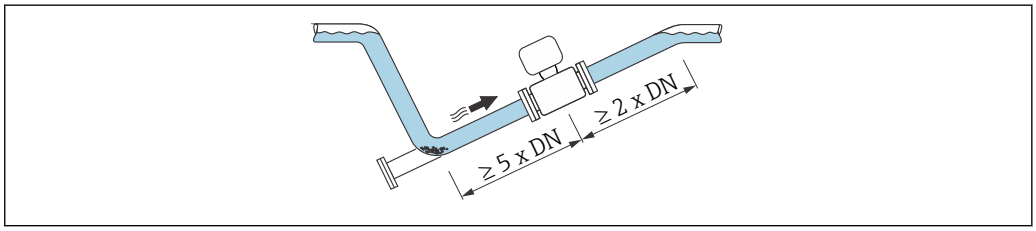

A0041088

No inlet and outlet runs for devices with the order code for "Design": Option C.

Installation near pumps

NOTICE

Negative pressure in the measuring tube can damage the liner!

- ▶ In order to maintain the system pressure, install the device in the flow direction downstream from the pump.
- ▶ Install pulsation dampers if reciprocating, diaphragm or peristaltic pumps are used.

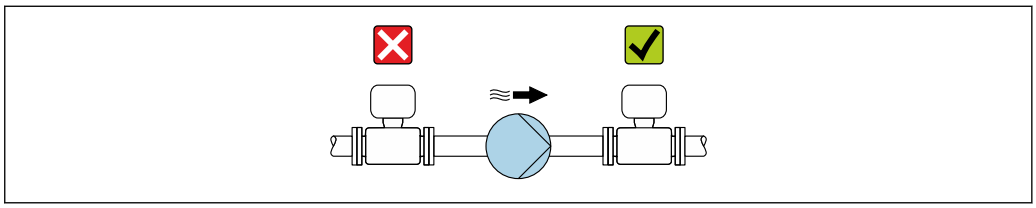

A0041083

- Information on the liner's resistance to partial vacuum → 44
- Information on the measuring system's resistance to vibration and shock → 40

Installation of very heavy devices

Support required for nominal diameters of DN ≥ 350 mm (14 in).

NOTICE

Damage to the device!

If incorrect support is provided, the sensor housing could buckle and the internal magnetic coils could be damaged.

- ▶ Only provide supports at the pipe flanges.

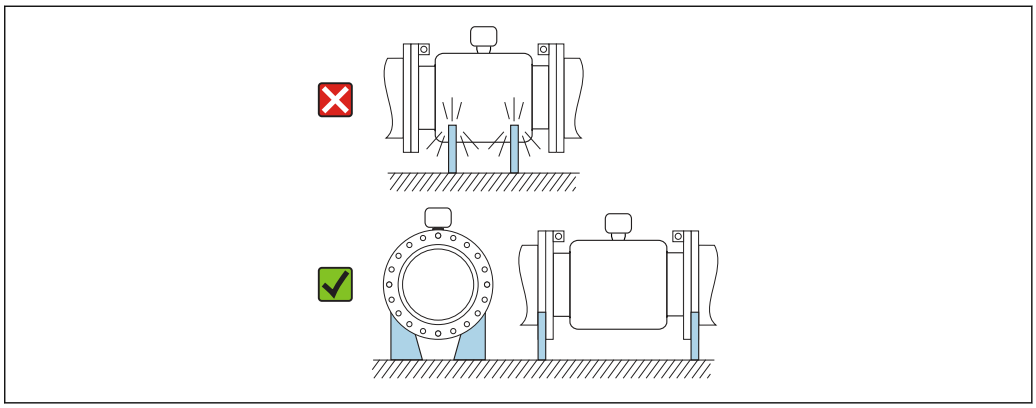

A0041087

Installation in event of pipe vibrations

NOTICE

Pipe vibrations can damage the device!

- ▶ Do not expose the device to strong vibrations.
- ▶ Support the pipe and fix it in place.
- ▶ Support the device and fix it in place.

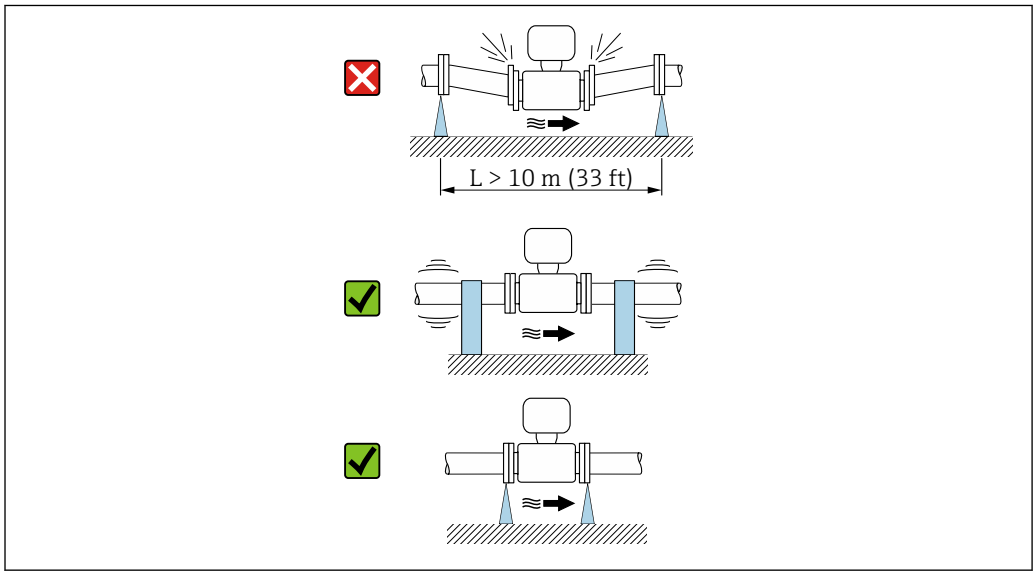

A0041092

Information on the measuring system's resistance to vibration and shock → 40

Orientation

The direction of the arrow on the nameplate helps you to install the measuring device according to the flow direction (direction of medium flow through the piping).

Orientation		Recommendation
Vertical orientation	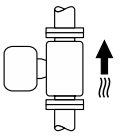 A0015591	✓✓
Horizontal orientation, transmitter at top	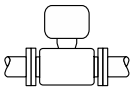 A0015589	✓✓ 1)
Horizontal orientation, transmitter at bottom	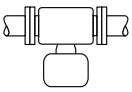 A0015590	✓✓ 2) 3) ✗ 4)
Horizontal orientation, transmitter at side	 A0015592	✗

1) Applications with low process temperatures may reduce the ambient temperature. To maintain the minimum ambient temperature for the transmitter, this orientation is recommended.
2) Applications with high process temperatures may increase the ambient temperature. To maintain the maximum ambient temperature for the transmitter, this orientation is recommended.
3) To prevent the electronics from overheating in the event of strong heat formation (e.g. CIP or SIP cleaning process), install the device with the transmitter part pointing downwards.
4) With the empty pipe detection function switched on: empty pipe detection only works if the transmitter housing is pointing upwards.

Vertical

Optimum for self-emptying pipe systems and for use in conjunction with empty pipe detection.

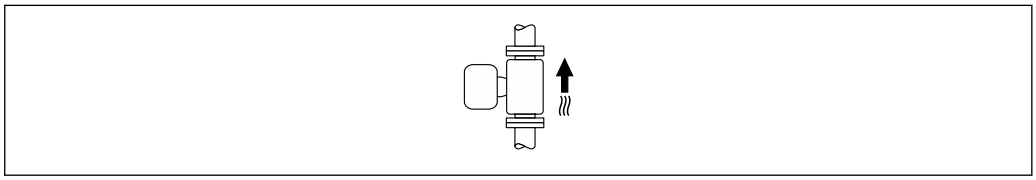

A0015591

Horizontal

- Ideally, the measuring electrode plane should be horizontal. This prevents brief insulation of the measuring electrodes by entrained air bubbles.
- Empty pipe detection only works if the transmitter housing is pointing upwards as otherwise there is no guarantee that the empty pipe detection function will actually respond to a partially filled or empty measuring tube.

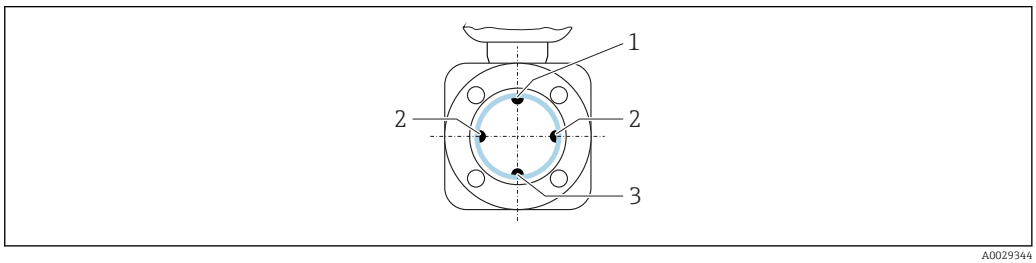

A0029344

1 EPD electrode for empty pipe detection
2 Measuring electrodes for signal detection
3 Reference electrode for potential equalization

Inlet and outlet runs

Installation with inlet and outlet runs

Installation requires inlet and outlet runs: devices with the order code for "Design", option E and G.

Installation with elbows, pumps or valves

To avoid a vacuum and to maintain the specified level of accuracy, if possible install the device upstream from assemblies that produce turbulence (e.g. valves, T-sections) and downstream from pumps.

Maintain straight, unimpeded inlet and outlet runs.

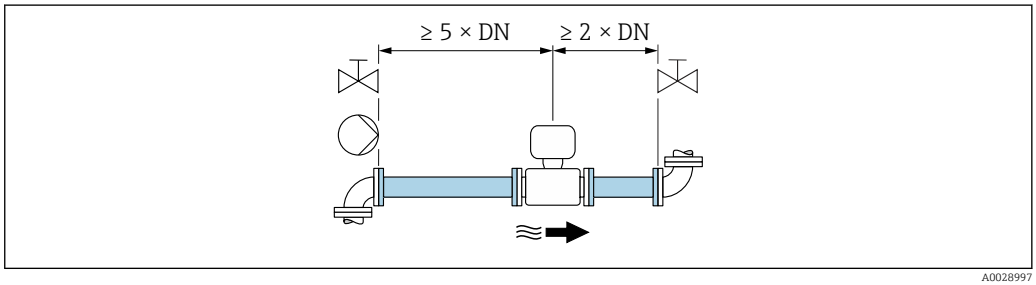

A0028997

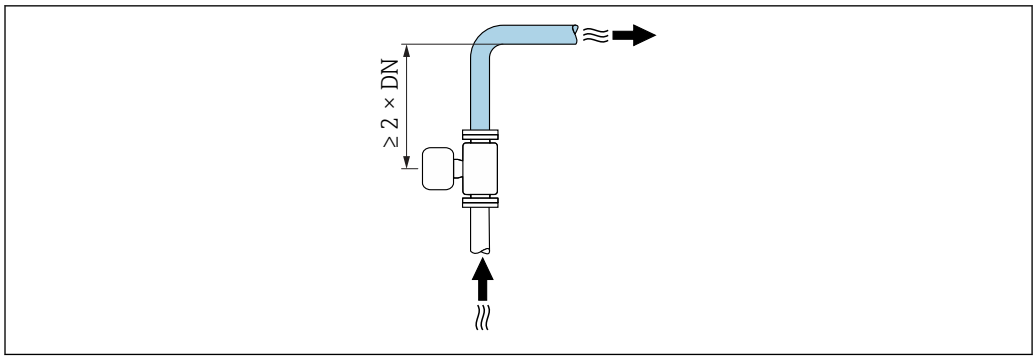

Installation without inlet and outlet runs

Depending on the device design and installation location, the inlet and outlet runs can be reduced or omitted entirely.

Maximum measurement error
When the device is installed with the inlet and outlet runs described, a maximum measurement error of ±0.5 % of the reading ±2 mm/s (0.08 in/s) can be guaranteed.

Devices and possible order options

Order code for "Design"		
Option	**Description**	**Design**
C	Fixed flange, constricted measuring tube, 0 x DN inlet/outlet runs	Constricted measuring tube [1]

1) "Constricted measuring tube" stands for a reduction of the internal diameter of the measuring tube. The reduced internal diameter causes a higher flow velocity inside the measuring tube.

Installation before or after bends

Installation without inlet and outlet runs is possible: devices with the order code for "Design", option C.

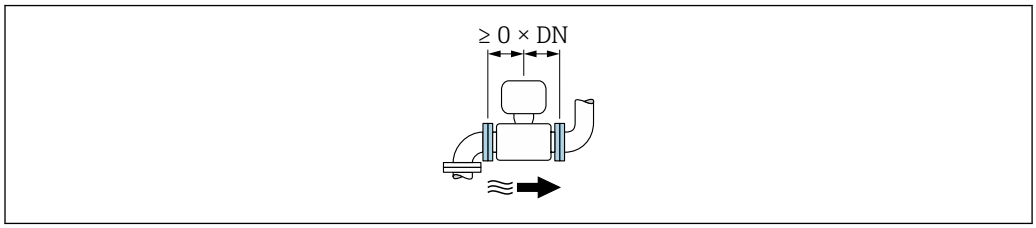

Installation downstream of pumps

Installation without inlet and outlet runs is possible: devices with the order code for "Design", option C.

In the case of devices with the order code for "Design", option J and K, an inlet run of only ≥ 2 x DN must be taken into consideration.

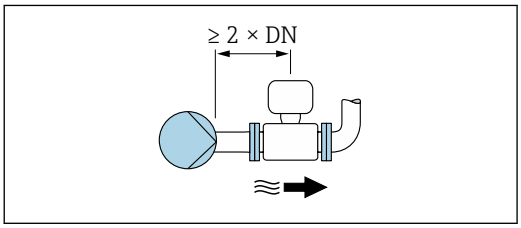

Installation upstream of valves

Installation without inlet and outlet runs is possible: devices with the order code for "Design", option C.

Installation downstream of valves

The device can be installed without inlet and outlet runs if the valve is 100% open during operation: devices with the order code for "Design", option C.

Adapters

The sensor can also be installed in larger-diameter pipes with the aid of suitable adapters according to DIN EN 545 (double-flange reducers). The resultant increase in the rate of flow improves measuring accuracy with very slow-moving fluids.

The nomogram shown here can be used to calculate the pressure loss caused by reducers and expanders:

- Calculate the ratio of the diameters d/D.
- From the nomogram read off the pressure loss as a function of flow velocity (downstream from the reduction) and the d/D ratio.

The nomogram only applies to liquids with a viscosity similar to that of water.

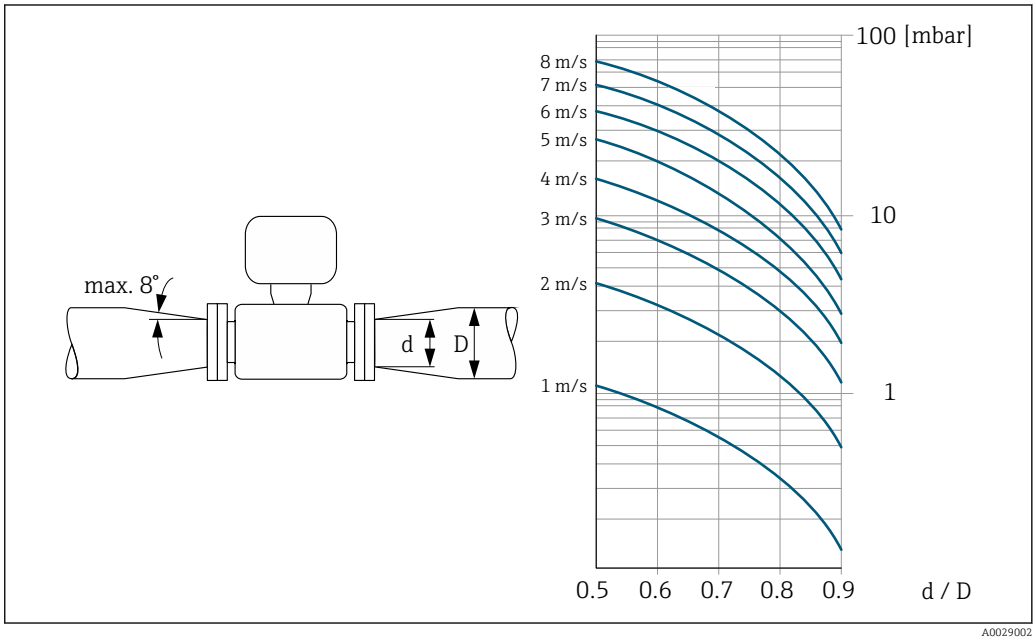

Length of connecting cable

To obtain correct measurement results, observe the permitted connecting cable length of L_{max}. This length is determined by the conductivity of the medium.

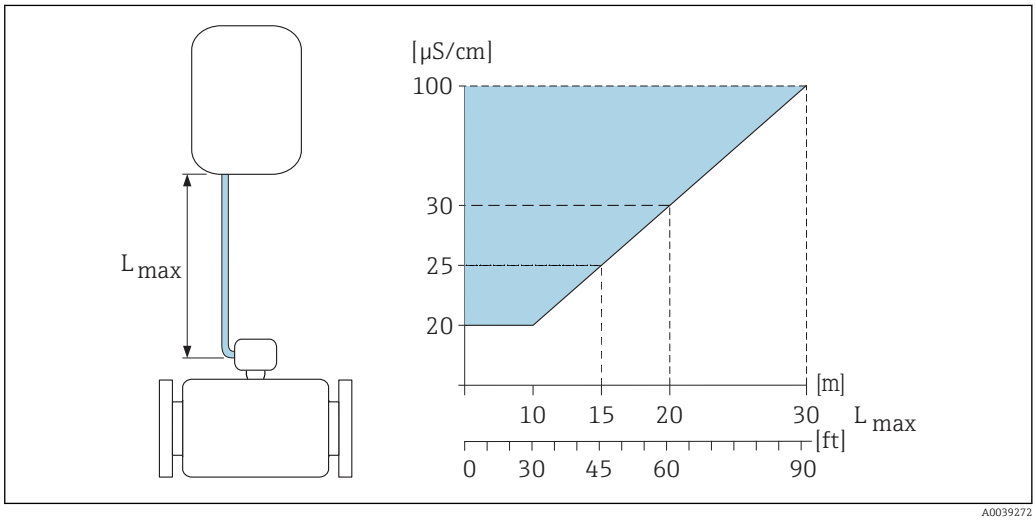

11 *Permitted length of connecting cable*

Colored area = permitted range
L_{max} = length of connecting cable in [m] ([ft])
[µS/cm] = medium conductivity

Mounting the transmitter housing and external battery housing, Proline Promag 800 - Advanced

Wall mounting Proline 800 - Advanced

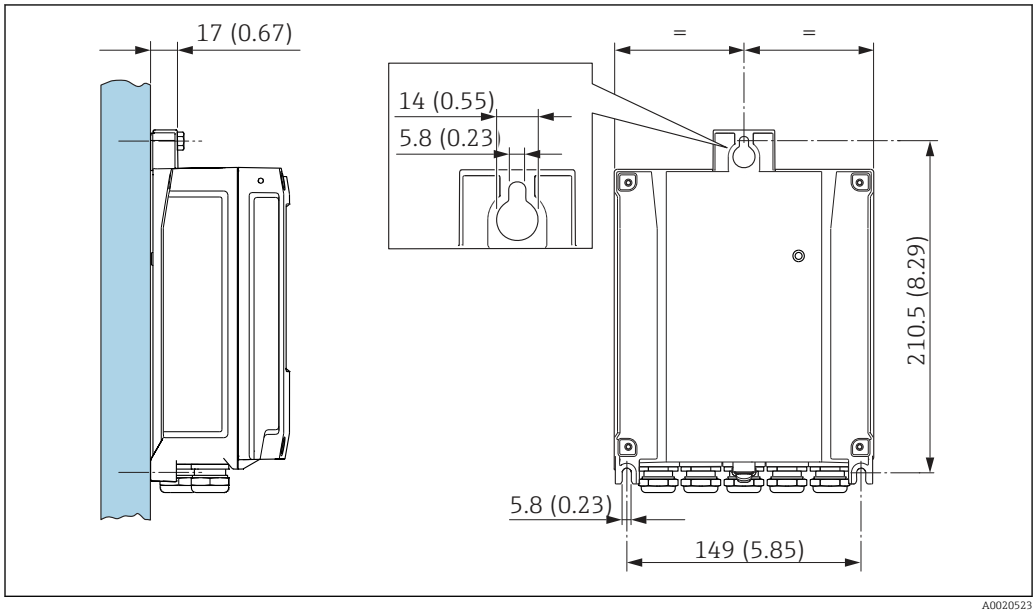

12 *Unit mm (in)*

Post mounting Proline 800 - Advanced

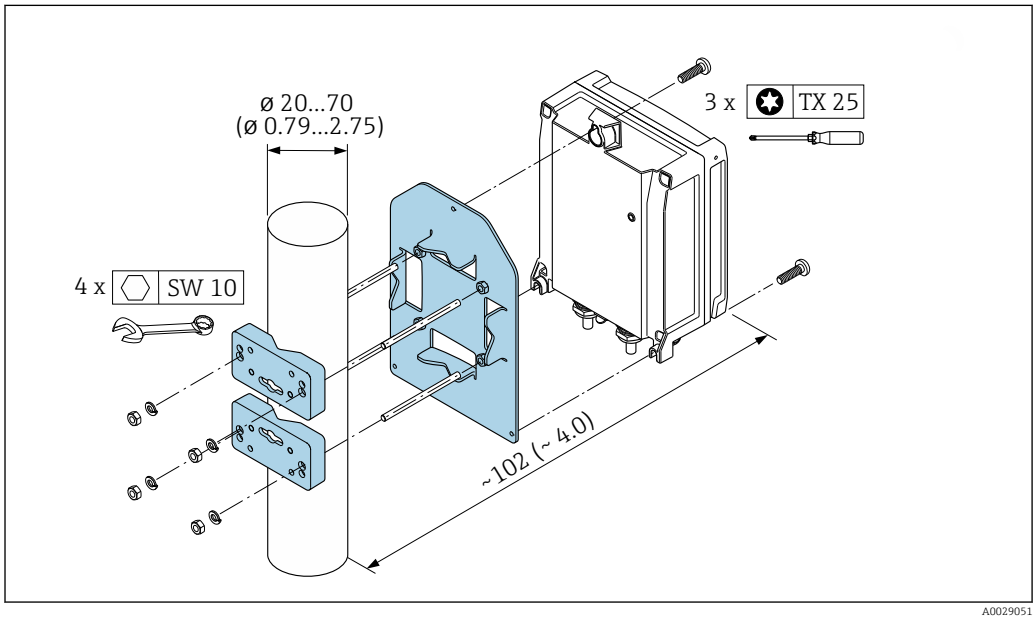

13 *Unit mm (in)*

Special mounting instructions

Display guard

To ensure that the display guard can be easily opened, maintain the following minimum head clearance: 350 mm (13.8 in)

Display guard available as an accessory → 85.

Weather protection cover

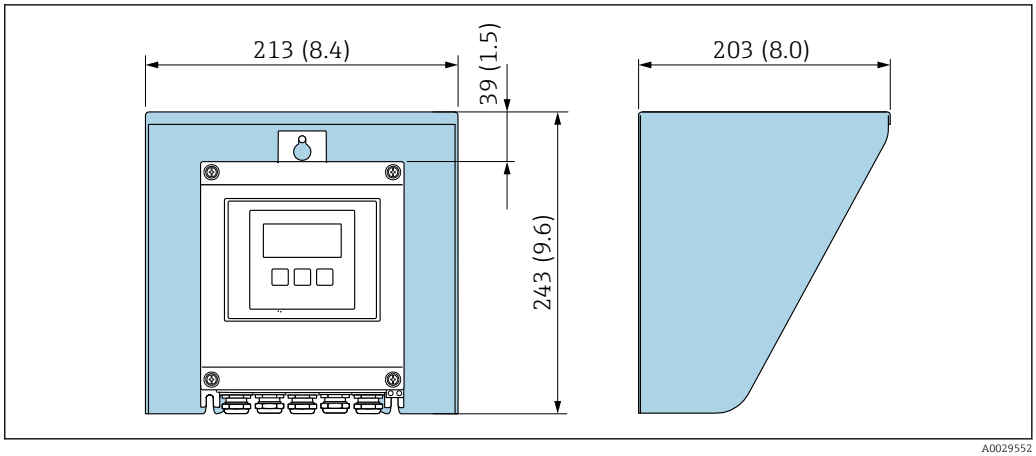

14 *Weather protection cover; engineering unit mm (in)*

For immersion in water, Proline 800 - Standard

The SmartBlue app cannot be used if the device is immersed in water, as Bluetooth connectivity will not be available.

NOTICE

If the maximum water depth and operating duration is exceeded, this can damage the device!

► Observe the maximum water depth and operating duration.

Order code "Sensor option", option CT "IP68, type 6P, 168h/3m (10 ft)"

- For use of device under rain or surface water
- Use at a maximum water depth of 3 m (10 ft) for 168 h

For immersion in water, Proline 800 - Advanced

- Only the remote version of the device with IP68 protection, type 6P is suitable for underwater use: order code for "Sensor option", options CB, CC, CD, CE and CQ.
- Pay attention to regional installation instructions.

NOTICE

If the maximum water depth and operating duration is exceeded, this can damage the device!

► Observe the maximum water depth and operating duration.

Order code for "Sensor option", options CB, CC

- For the operation of the device under water
- Operating duration at a maximum depth of:
  - 3 m (10 ft): permanent use
  - 10 m (30 ft): maximum 48 hours

Order code for "Sensor option", option CQ "IP68, type 6P, factory encapsulation"

- For permanent use of device under rain or surface water
- Use at a maximum water depth of 3 m (10 ft)

Order code for "Sensor option", options CD, CE

- For the operation of the device under water and in saline water
- Operating duration at a maximum depth of:
  - 3 m (10 ft): permanent use
  - 10 m (30 ft): maximum 48 hours

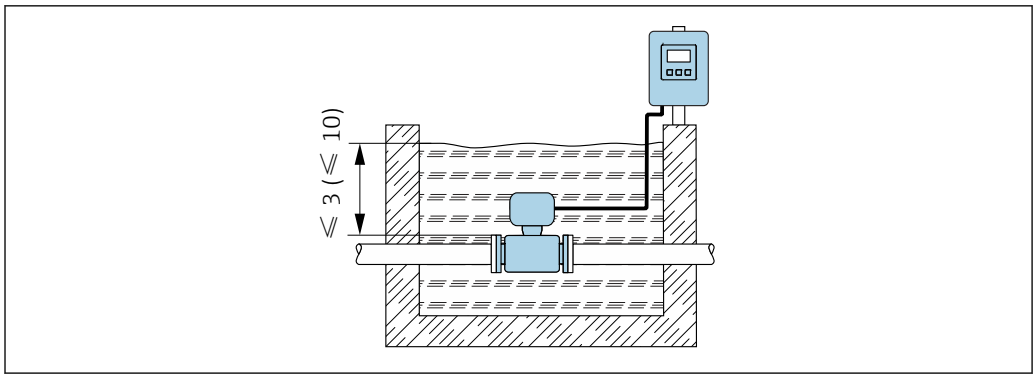

A0042412

15 *Installation for permanent immersion in water*

For use in buried applications, Proline 800 - Advanced

- Only the remote version of the device with IP68 protection is suitable for use in buried applications: order code for "Sensor option", options CD and CE.
- Pay attention to regional installation instructions.

Order code for "Sensor option", options CD, CE

For the use of the device in buried applications.

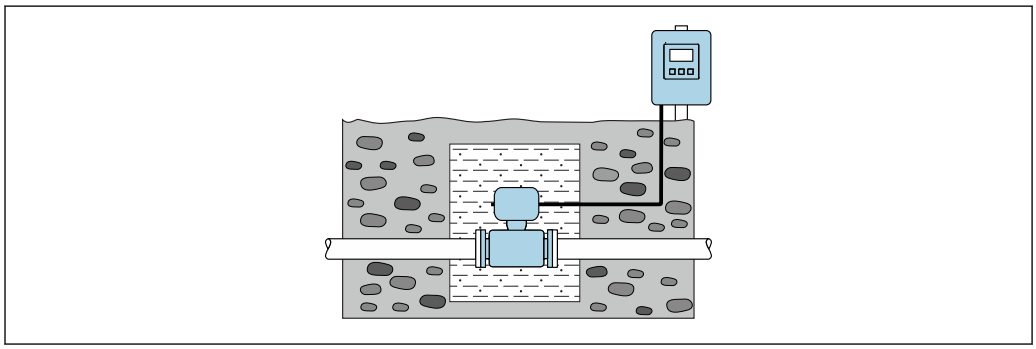

A0042646

Environment

Ambient temperature range

Transmitter	−25 to +60 °C (−13 to +140 °F)
Local display	−20 to +60 °C (−4 to +140 °F); readability of the local display may be impaired at temperatures outside the temperature range.
Sensor	▪ Process connection material, carbon steel: −10 to +60 °C (+14 to +140 °F) ▪ Process connection material, stainless steel: −40 to +60 °C (−40 to +140 °F) If both the ambient and the medium temperatures are high, mount the sensor separately from the transmitter.
Liner	Do not exceed or fall below the permitted temperature range of the liner → 40.
External battery pack	Do not exceed or fall below the battery temperature range specified by the manufacturer.

If operating outdoors:
- Measuring device suitable for use in wet environments
- Install the measuring device in a shady location.
- Avoid direct sunlight, particularly in warm climatic regions. Use display protection to provide additional protection from sunlight. → 🖹 85
- Avoid direct exposure to weather conditions.
- If the compact version of the device is insulated at low temperatures, the insulation must also include the device neck.
- Protect the display against impact.
- Protect the display from abrasion by sand in desert areas.
- Protect the pressure sensor from icing.

Display guard available as an accessory → 🖹 85.

Storage temperature

The storage temperature corresponds to the operating temperature range of the transmitter and the sensor → 🖹 38.

- Protect the measuring device against direct sunlight during storage in order to avoid unacceptably high surface temperatures.
- Select a storage location where moisture cannot collect in the measuring device as fungus or bacteria infestation can damage the liner.
- If protection caps or protective covers are mounted these should never be removed before installing the measuring device.

Relative humidity

The device is suitable for use outdoors and indoors with a relative humidity of 4 to 95 %.

Operating height

According to EN 61010-1
- ≤ 2 000 m (6 562 ft)
- > 2 000 m (6 562 ft) with additional overvoltage protection (e.g. Endress+Hauser HAW Series)

Atmosphere

If a plastic transmitter housing is permanently exposed to certain steam and air mixtures, this can damage the housing.

In cases of doubt, please contact the Sales Center.

Degree of protection

Transmitter
- Standard: IP66/67, Type 4X enclosure, suitable for pollution degree 4
- When the housing is open: IP20, Type 1 enclosure, suitable for pollution degree 2

An inserted mating connector or a fitted protection cap is accepted as a prerequisite for maintaining the specified degree of protection.

Proline Promag 800 sensor - Standard
- Standard: IP66/67, type 4X enclosure, suitable for pollution degree 4
- Optional or with order code "Calibration flow", option 8 "Water custody transfer approval":
  - IP68 type 6P, suitable for pollution degree 4
  - Order code "Sensor option", option CT "IP68, type 6P, 168h/3m (10 ft)" For use of device under rain or surface water Use at a maximum water depth of 3 m (10 ft) for 168 h

Proline Promag 800 - Advanced sensor
- Standard: IP66/67, Type 4X enclosure, suitable for pollution degree 4
- Optionally available for remote version:
  - IP66/67, type 4X enclosure; fully welded, with protective varnish EN ISO 12944 C5-M. Suitable for use in corrosive atmospheres.
  - IP68, type 6P enclosure; fully welded, with protective varnish as per EN ISO 12944 C5-M. Suitable for permanent immersion in water ≤ 3 m (10 ft) or up to 48 hours at depths ≤ 10 m (30 ft).
  - IP68, type 6P enclosure; fully welded, with protective varnish as per EN ISO 12944 Im1/Im2/Im3. Suitable for permanent immersion in saline water ≤ 3 m (10 ft) or up to 48 hours at depths ≤ 10 m (30 ft) or in buried applications.

Accessories

Optional:
- External battery power supply: IP66/IP67, Type 4X enclosure
- Pressure measurement: IP68, 48 h under water 3 m (10 ft) with order code for "Accessory enclosed", option PJ
- Pressure measurement: IP67 with order code for "Accessory enclosed", option PI

Vibration-resistance and shock-resistance

Proline 800 - Advanced

Mount external mobile communications antenna remotely for any measuring points that are subject to vibration.

Vibration sinusoidal, in accordance with IEC 60068-2-6

Compact version
- 2 to 8.4 Hz, 7.5 mm peak
- 8.4 to 2 000 Hz, 2 g peak

Remote version
- 2 to 8.4 Hz, 7.5 mm peak
- 8.4 to 2 000 Hz, 2 g peak

Vibration broad-band random, according to IEC 60068-2-64

Compact version
- 10 to 200 Hz, 0.01 g^2/Hz
- 200 to 2 000 Hz, 0.003 g^2/Hz
- Total: 2.70 g rms

Remote version
- 10 to 200 Hz, 0.01 g^2/Hz
- 200 to 2 000 Hz, 0.003 g^2/Hz
- Total: 2.70 g rms

Shock half-sine, according to IEC 60068-2-27

- Compact version; order code for "Housing", option D "Compact IP68,type 6P, polycarbonate" 6 ms 50 g
- Compact version; order code for "Housing", option M "Compact, polycarbonate" 6 ms 50 g
- Remote version; order code for "Housing", option N "Remote, polycarbonate" 6 ms 50 g

Rough handling shocks according to IEC 60068-2-31

Mechanical load

Transmitter housing:
- Protect against mechanical effects, such as shock or impact
- Do not use as a ladder or climbing aid

Electromagnetic compatibility (EMC)

As per IEC/EN 61326

Details are provided in the Declaration of Conformity.

This unit is not intended for use in residential environments and cannot guarantee adequate protection of the radio reception in such environments.

The selection of a sensor with a steel housing is recommended for use in the vicinity of electrical power supply lines with strong currents.

Process

Medium temperature range

- 0 to +70 °C (+32 to +158 °F) for hard rubber, DN 50 to 900 (2 to 36")
- −20 to +50 °C (−4 to +122 °F) for polyurethane, DN 25 to 900 (1 to 36")
- −20 to +70 °C (−4 to +158 °F) for PTFE, DN 25 to 300 (1 to 12")

Hard rubber	DN 50 to 900 (2 to 36")	0 to +70 °C (+32 to +158 °F)
Polyurethane	DN 25 to 900 (1 to 36")	−20 to +50 °C (−4 to +122 °F)
PTFE	DN 25 to 300 (1 to 12")	−20 to +70 °C (−4 to +158 °F)

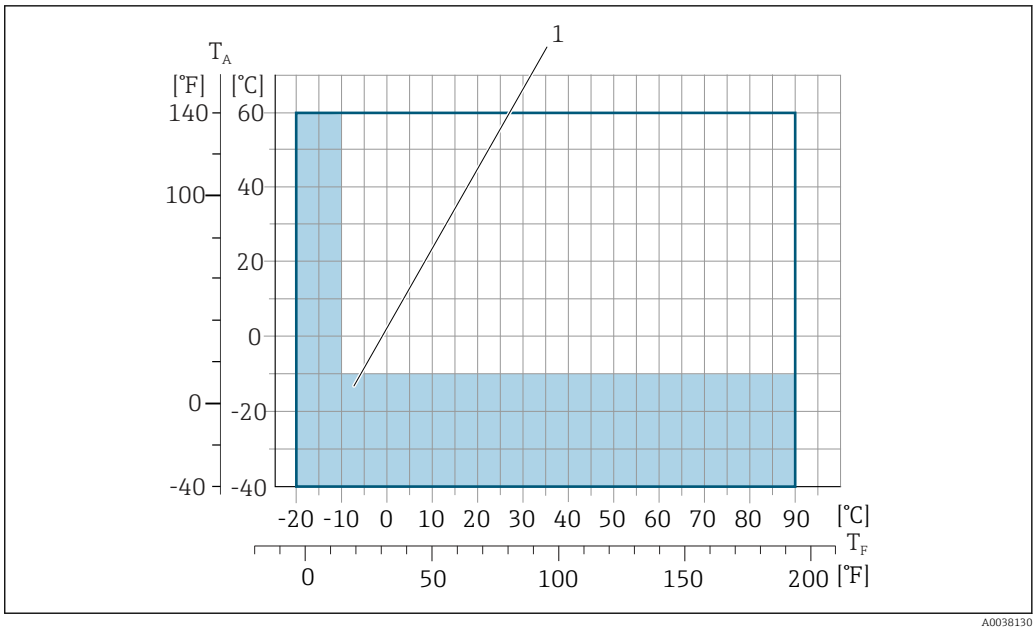

T_A *Ambient temperature*
T_F *Medium temperature*
1 *Colored area: The ambient temperature range of −10 to −40 °C (+14 to −40 °F) and the medium temperature range of −10 to −20 °C (+14 to −4 °F) only apply for stainless flanges.*

For detailed information regarding the medium temperature in custody transfer, see the Special Documentation → 88.

Conductivity

≥20 µS/cm for liquids in general.

Remote version
The necessary minimum conductivity also depends on the length of the connecting cable → 35.

Pressure-temperature ratings

The following pressure/temperature diagrams apply to all pressure-bearing parts of the device and not just the process connection. The diagrams show the maximum permissible medium pressure depending on the specific medium temperature.

Process connection: fixed flange similar to EN 1092-1 (DIN 2501)

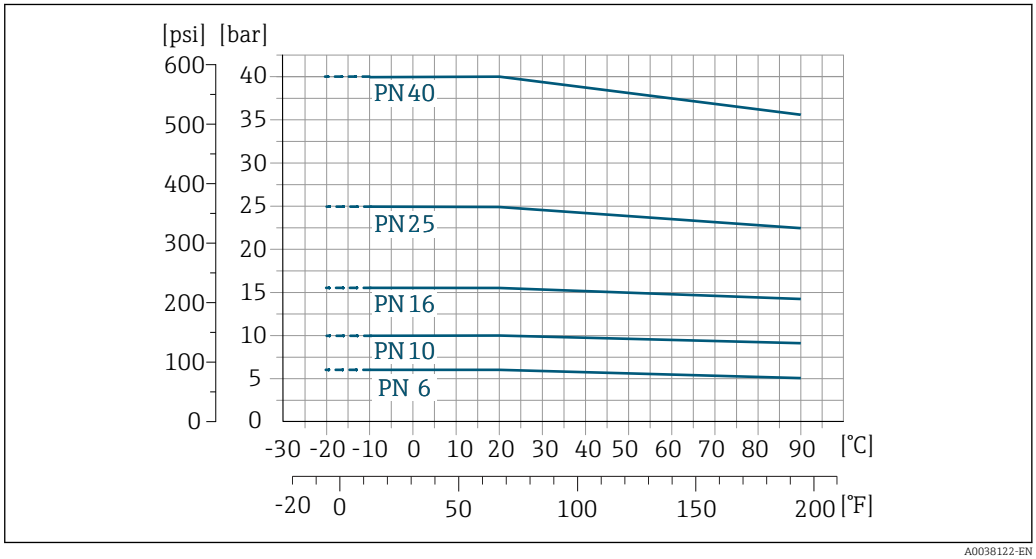

16 *Process connection material: stainless steel (−20 °C (−4 °F)); carbon steel (−10 °C (14 °F))*

Process connection: fixed flange similar to ASME B16.5

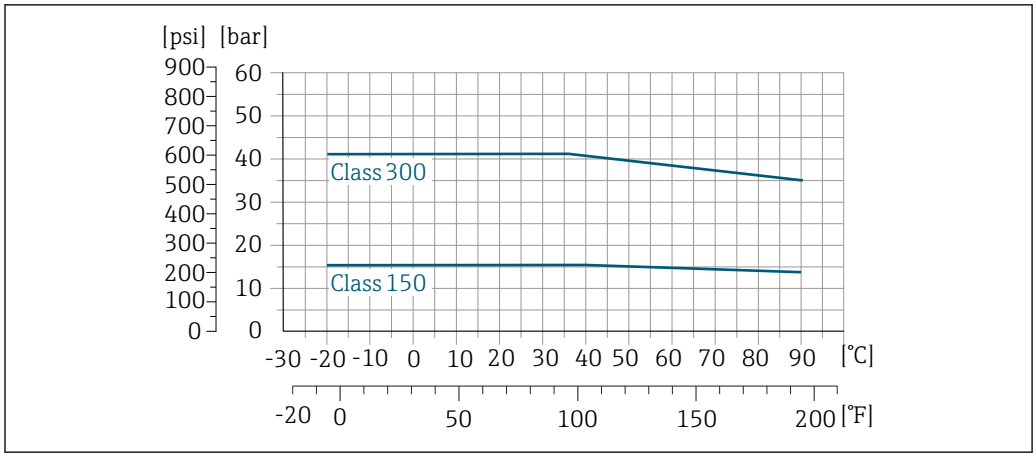

17 *Process connection material: stainless steel*

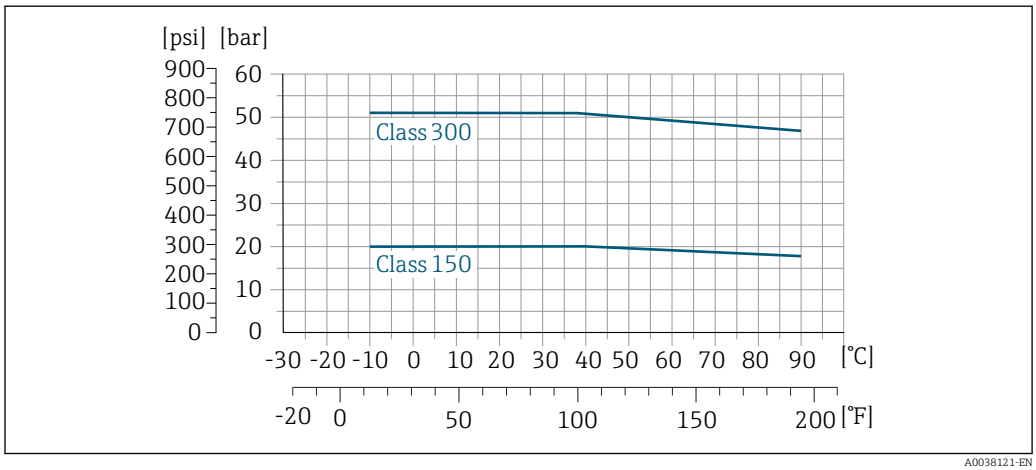

18 *Process connection material: carbon steel*

Process connection: fixed flange similar to JIS B2220

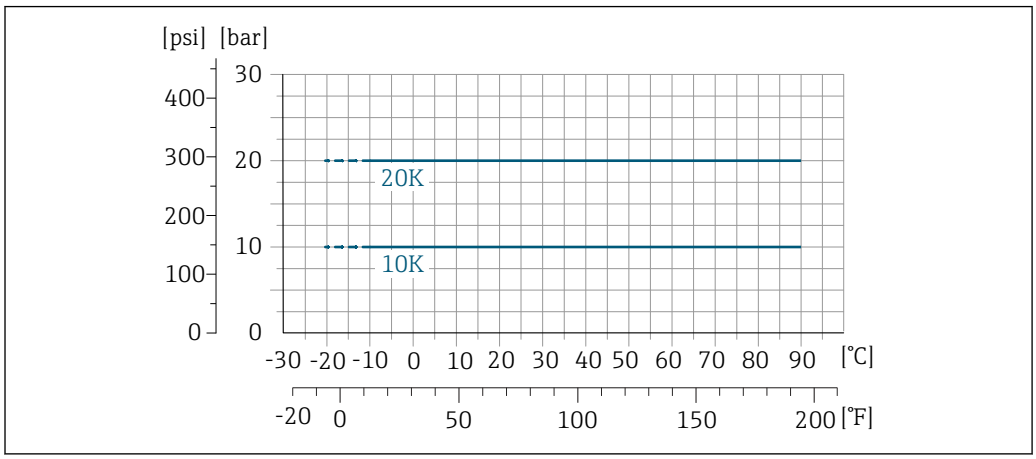

19 *Process connection material: stainless steel (−20 °C (−4 °F)); carbon steel (−10 °C (14 °F))*

Process connection: fixed flange similar to AWWA C207

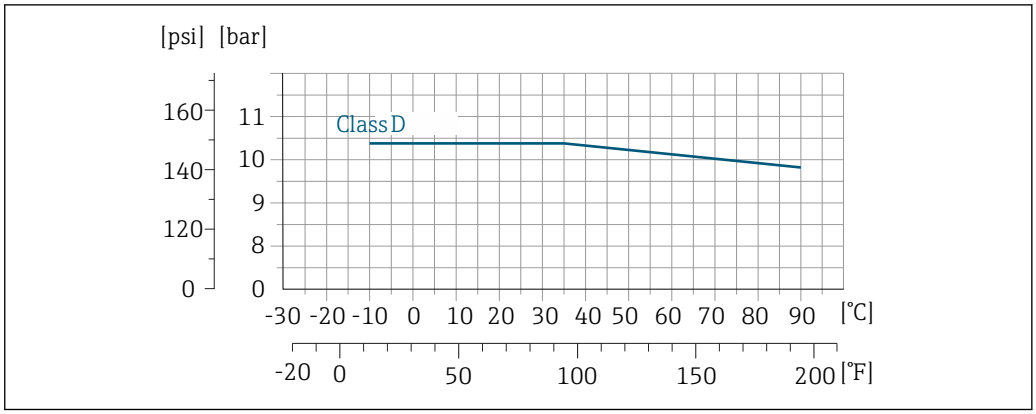

20 Process connection material: carbon steel

Process connection: fixed flange similar to AS 2129

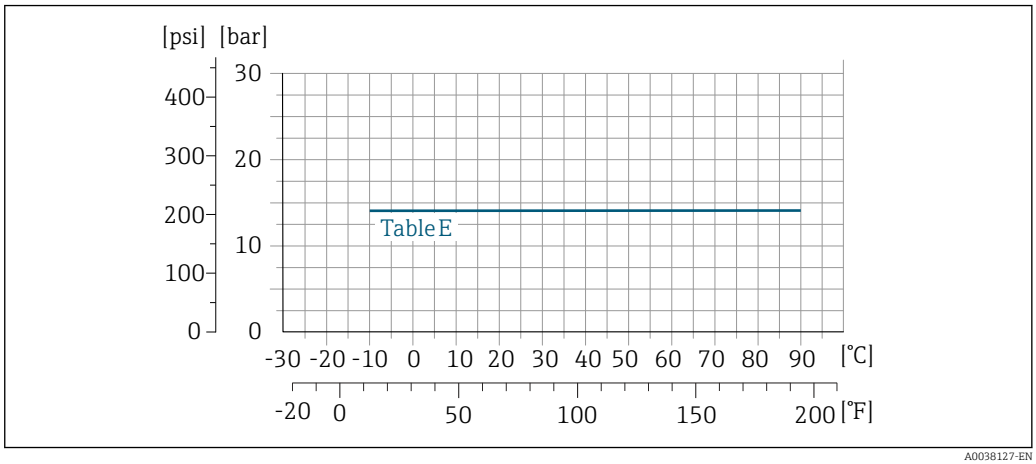

21 Process connection material: carbon steel

Process connection: fixed flange similar to AS 4087

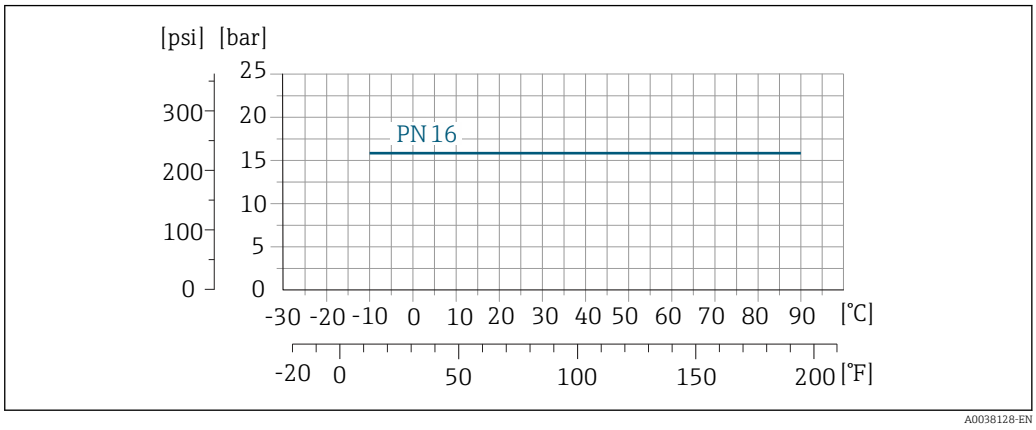

22 Process connection material: carbon steel

Process connection: lap joint flange/lap joint flange, stamped plate similar to EN 1092-1 (DIN 2501) and ASME B16.5; DN 25 to 300 (1 to 12")

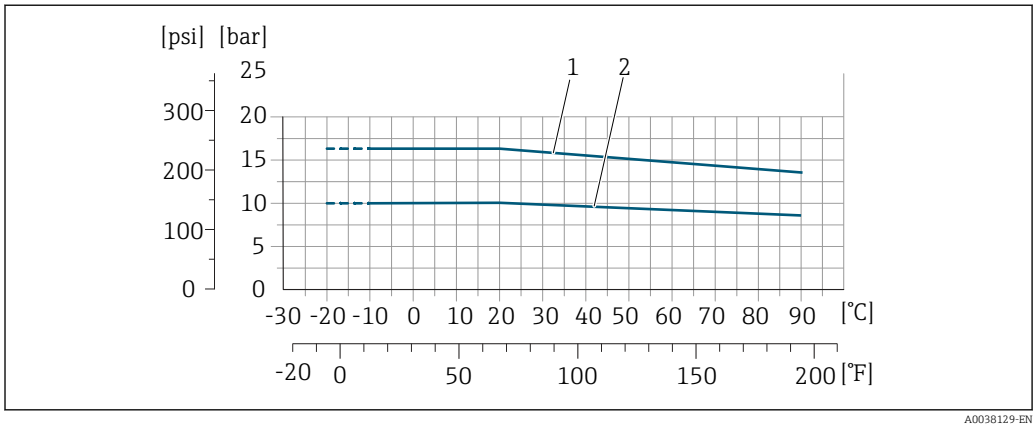

23 Process connection material: stainless steel (−20 °C (−4 °F)); carbon steel (−10 °C (14 °F))

1 Lap joint flange PN16/ Class150
2 Lap joint flange, stamped plate PN10, lap joint flange PN10

Pressure tightness

Liner: hard rubber

Nominal diameter		Limit values for absolute pressure in [mbar] ([psi]) for medium temperatures:		
[mm]	[in]	+25 °C (+77 °F)	+50 °C (+122 °F)	+70 °C (+158 °F)
50 … 900	2 … 36	0 (0)	0 (0)	0 (0)

Liner: polyurethane

Nominal diameter		Limit values for absolute pressure in [mbar] ([psi]) for medium temperatures:	
[mm]	[in]	+25 °C (+77 °F)	+50 °C (+122 °F)
25 … 900	1 … 36	0 (0)	0 (0)

Liner: PTFE

Nominal diameter		Limit values for absolute pressure in [mbar] ([psi]) for medium temperatures:	
[mm]	[in]	+25 °C (+77 °F)	+70 °C (+158 °F)
25	1	0 (0)	0 (0)
40	2	0 (0)	0 (0)
50	2	0 (0)	0 (0)
65	2 ½	0 (0)	40 (0.58)
80	3	0 (0)	40 (0.58)
100	4	0 (0)	135 (2.0)
125	5	135 (2.0)	240 (3.5)
150	6	135 (2.0)	240 (3.5)
200	8	200 (2.9)	290 (4.2)
250	10	330 (4.8)	400 (5.8)
300	12	400 (5.8)	500 (7.3)

Flow limit

The diameter of the pipe and the flow rate determine the nominal diameter of the sensor. The optimum velocity of flow is between 2 to 3 m/s (6.56 to 9.84 ft/s).

A necessary increase in the flow velocity can be achieved by reducing the sensor nominal diameter.

For custody transfer, the applicable approval determines the permitted measuring range.

Pressure loss

- No pressure loss occurs if the sensor is installed in a pipe with the same nominal diameter.
- Pressure losses for configurations incorporating adapters according to DIN EN 545 → 35

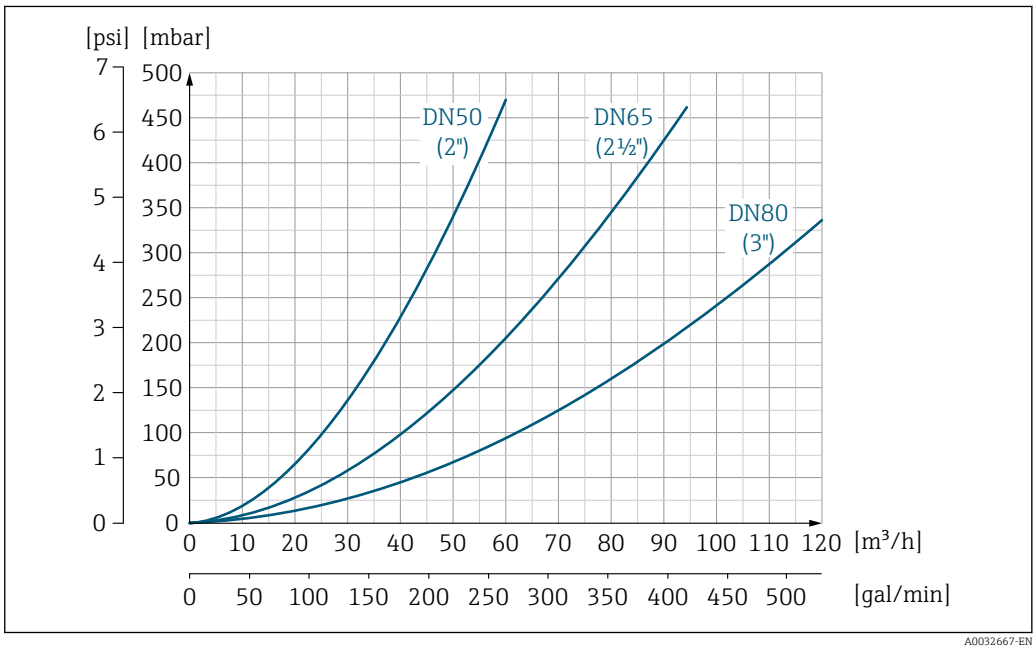

24 *Pressure loss DN 50 to 80 (2 to 3") for order code for "Design", option C "Fixed flange, constricted measuring tube", 0 x DN inlet/outlet runs"*

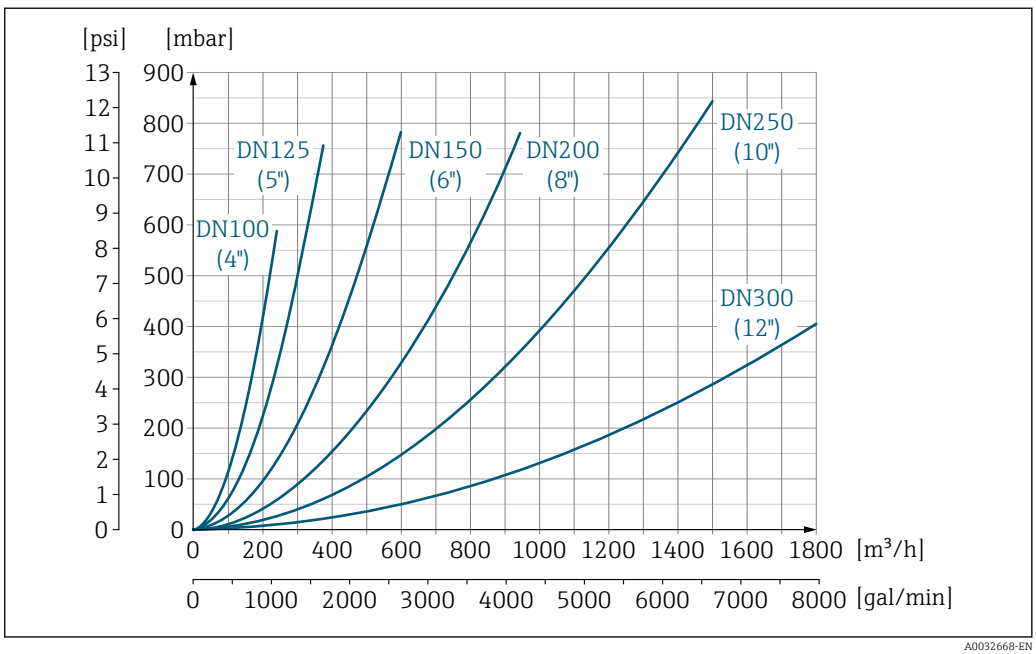

25 *Pressure loss DN 100 to 300 (4 to 12") for order code for "Design", option C "Fixed flange, constricted measuring tube", 0 x DN inlet/outlet runs"*

System pressure

Installation near pumps → 31

Vibrations	Installation in event of pipe vibrations → 32
Corrosive environment	The fully welded remote version of the device can be used permanently in a corrosive (saline) environment. The measuring device satisfies certified corrosion protection in accordance with EN ISO 12944 C5M. The fully welded design and the protective varnish guarantee use in a saline environment.

Custody transfer

The measuring device is optionally tested in accordance with OIML R49 and has an EU type-examination certificate according to Measuring Instruments Directive 2014/32/EU for service subject to legal metrological control ("custody transfer") for cold water (Annex III).

The permitted medium temperature in these applications is 0 to +50 °C (+32 to +122 °F).

The device is used with a legally controlled totalizer display on the local display.

Measuring devices subject to legal metrological control totalize in both directions, i.e. all the outputs consider flow components in the positive (forward) and negative (reverse) flow direction.

Generally a measuring device subject to legal metrological control is secured against tampering by seals on the transmitter or sensor. These seals may normally only be opened by a representative of the competent authority for legal metrology controls.

After putting the device into circulation or after sealing the device, operation is only possible to a limited extent.

Detailed ordering information is available from your local Endress+Hauser sales center for national approvals (outside Europe) as cold water meters based on OIML R49.

Mechanical construction

Dimensions in SI units

Compact version Proline Promag 800 - Standard

Order code for "Functionality", option A

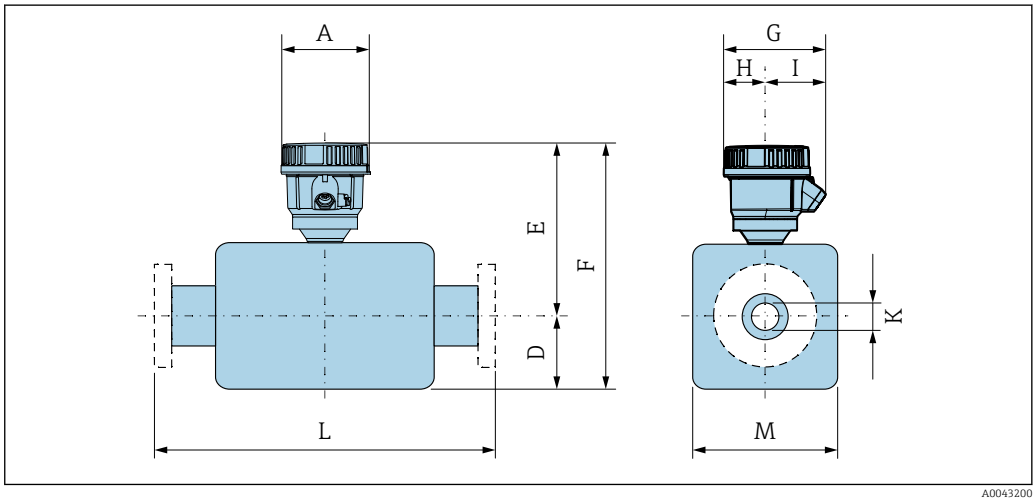

A0043200

A [mm]	G [1] [mm]	H [mm]	I [1] [mm]
128	155	61.5	93.5

1) Depending on the cable gland used: values up to + 30 mm

DN 25 to 300 mm (1 to 12 in): Sensor with aluminum half-shell housing

DN		Order code for "Design"								K	L
		Options D, E				Option C					
		D [1]	E [1]	F [1]	M [1]	D [1]	E [1]	F [1]	M [1]		
[mm]	[in]	[mm]	[mm]	[mm]	[mm]	[mm]	[mm]	[mm]	[mm]	[mm]	[mm]
25	1	84	213	297	120	–	–	–	–	[2]	200
32	–	84	213	297	120	–	–	–	–	[2]	200
40	1 ½	84	213	297	120	–	–	–	–	[2]	200
50	2	84	213	297	120	84	201	285	120	[2]	200
65	–	109	238	347	180	84	201	285	120	[2]	200
80	3	109	238	347	180	84	201	285	120	[2]	200
100	4	109	238	347	180	109	226	335	180	[2]	250
125	–	150	278	428	260	109	226	335	180	[2]	250
150	6	150	278	428	260	109	226	335	180	[2]	300
200	8	180	303	483	324	150	266	416	260	[2]	350
250	10	205	328	533	400	150	266	416	260	[2]	450
300	12	230	353	583	460	180	291	471	324	[2]	500

1) The dimensions are reference values. They may vary depending on the pressure rating, design and order option.
2) Depends on the liner → 78

DN 25 to 300 (1 to 12"): fully welded sensor (IP66/67) only with order code for "Calibration flow", option 8 "Water custody transfer approval"

DN		Order code for "Design"								K	L
		Option E				Option C					
		D [1]	E [1]	F [1]	M [1]	D [1]	E [1]	F [1]	M [1]		
[mm]	[in]	[mm]	[mm]	[mm]	[mm]	[mm]	[mm]	[mm]	[mm]	[mm]	[mm]
25	1	70	215	285	140	–	–	–	–	[2]	200
32	–	70	215	285	140	–	–	–	–	[2]	200
40	1 ½	70	215	285	140	–	–	–	–	[2]	200
50	2	70	215	285	140	70	203	273	140	[2]	200
65	–	82	227.5	309.5	165	70	215.5	285.5	140	[2]	200
80	3	87	232.5	319.5	175	70	220.5	290.5	140	[2]	200
100	4	100	245	345	200	82	215.5	297.5	165	[2]	250
125	–	113	258	371	226	87	220.5	307.5	175	[2]	250
150	6	134	279.5	413.5	269	100	233	333	200	[2]	300
200	8	160	305	465	320	113	246	359	226	[2]	350
250	10	193	338.5	531.5	387	134	267.5	401.5	269	[2]	450
300	12	218	363.5	581.5	437	160	293	453	320	[2]	500

1) The dimensions are reference values. They may vary depending on the pressure rating, design and order option.
2) Depends on the liner → 78

DN 350 to 400 mm (14 to 16 in)

DN		Order code for "Design" Option E					
		D [1]	E [1]	F [1]	M [1]	K	L
[mm]	[in]	[mm]	[mm]	[mm]	[mm]	[mm]	[mm]
350	14	282	391	691	564	[2]	550
375	15	308	435	743	616	[2]	600
400	16	308	435	743	616	[2]	600

1) The dimensions are reference values. They may vary depending on the pressure rating, design and order option.
2) Depends on the liner → 78

DN 450 to 600 mm (18 to 24 in)

DN		Order code for "Design" Option G					
		D [1]	E [1]	F [1]	M [1]	K	L
[mm]	[in]	[mm]	[mm]	[mm]	[mm]	[mm]	[mm]
450	18	333	460	793	666	[2]	650
500	20	359	486	845	717	[2]	650
600	24	411	538	949	821	[2]	780

1) The dimensions are reference values. They may vary depending on the pressure rating, design and order option.
2) Depends on the liner → 78

Compact version Proline Promag 800 - Advanced

Order code for "Housing", option D "Compact; IP68, Type 6P; polycarbonate" or option E "Compact Advanced, polycarbonate"

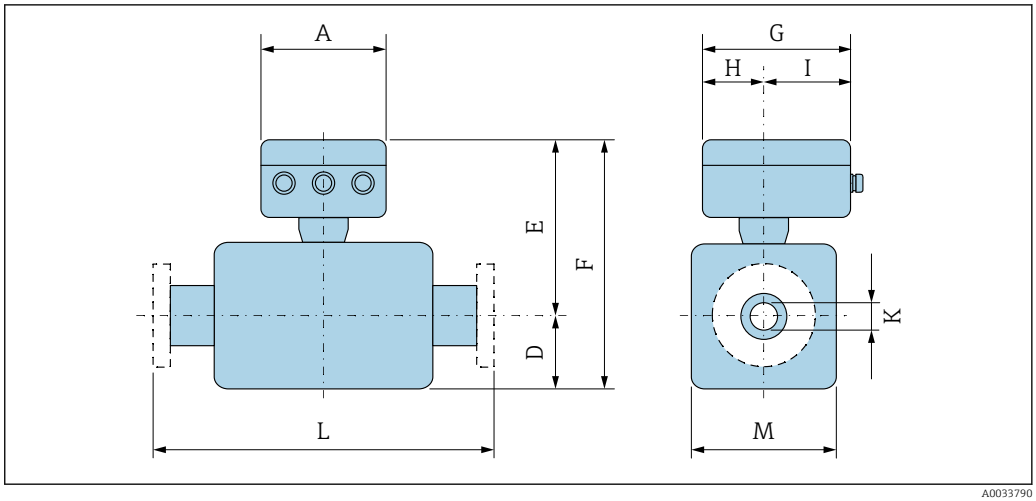

A0033790

A	G [1]	H	I [1]
[mm]	[mm]	[mm]	[mm]
167	193	90	103

1) Depending on the cable gland used: values up to + 30 mm

DN 25 to 300 mm (1 to 12 in): Sensor with aluminum half-shell housing

DN		Order code for "Design"								K	L
		Options D, E				Option C					
		D [1]	E [1]	F [1]	M [1]	D [1]	E [1]	F [1]	M [1]	K	L
[mm]	[in]	[mm]	[mm]	[mm]	[mm]	[mm]	[mm]	[mm]	[mm]	[mm]	[mm]
25	1	84	201	285	120	–	–	–	–	2)	200
32	–	84	201	285	120	–	–	–	–	2)	200
40	1 ½	84	201	285	120	–	–	–	–	2)	200
50	2	84	201	285	120	84	201	285	120	2)	200
65	–	109	226	335	180	84	201	285	120	2)	200
80	3	109	226	335	180	84	201	285	120	2)	200
100	4	109	226	335	180	109	226	335	180	2)	250
125	–	150	266	416	260	109	226	335	180	2)	250
150	6	150	266	416	260	109	226	335	180	2)	300
200	8	180	291	471	324	150	266	416	260	2)	350
250	10	205	316	521	400	150	266	416	260	2)	450
300	12	230	341	571	460	180	291	471	324	2)	500

1) The dimensions are reference values. They may vary depending on the pressure rating, design and order option.
2) Depends on the liner → 🖹 78

DN 25 to 300 (1 to 12"): fully welded sensor (IP66/67)

DN		Order code for "Design"								K	L
		Option E				Option C					
		D [1]	E [1]	F [1]	M [1]	D [1]	E [1]	F [1]	M [1]	K	L
[mm]	[in]	[mm]	[mm]	[mm]	[mm]	[mm]	[mm]	[mm]	[mm]	[mm]	[mm]
25	1	70	203	273	140	–	–	–	–	2)	200
32	–	70	203	273	140	–	–	–	–	2)	200
40	1 ½	70	203	273	140	–	–	–	–	2)	200
50	2	70	203	273	140	70	203	273	140	2)	200
65	–	82	215.5	297.5	165	70	215.5	285.5	140	2)	200
80	3	87	220.5	307.5	175	70	220.5	290.5	140	2)	200
100	4	100	233	333	200	82	215.5	297.5	165	2)	250
125	–	113	246	359	226	87	220.5	307.5	175	2)	250
150	6	134	267.5	401.5	269	100	233	333	200	2)	300
200	8	160	293	453	320	113	246	359	226	2)	350
250	10	193	326.5	519.5	387	134	267.5	401.5	269	2)	450
300	12	218	351.5	569.5	437	160	293	453	320	2)	500

1) The dimensions are reference values. They may vary depending on the pressure rating, design and order option.
2) Depends on the liner → 🖹 78

DN 350 to 400 mm (14 to 16 in)

DN		Order code for "Design" Option E					
		D [1]	E [1]	F [1]	M [1]	K	L
[mm]	[in]	[mm]	[mm]	[mm]	[mm]	[mm]	[mm]
350	14	282	379	679	564	[2]	550
375	15	308	423	731	616	[2]	600
400	16	308	423	731	616	[2]	600

1) The dimensions are reference values. They may vary depending on the pressure rating, design and order option.
2) Depends on the liner → 78

DN 450 to 900 mm (18 to 36 in)

DN		Order code for "Design" Option G					
		D [1]	E [1]	F [1]	M [1]	K	L
[mm]	[in]	[mm]	[mm]	[mm]	[mm]	[mm]	[mm]
450	18	333	448	781	666	[2]	650
500	20	359	474	833	717	[2]	650
600	24	411	526	937	821	[2]	780
700	28	512	627	1139	1024	[2]	910
750	30	512	627	1139	1024	[2]	975
800	32	534	649	1183	1065	[2]	1040
900	36	610	725	1335	1218	[2]	1170

1) The dimensions are reference values. They may vary depending on the pressure rating, design and order option.
2) Depends on the liner → 78

Remote version, Proline Promag 800 - Advanced

Transmitter remote version

Order code for "Housing", option F "Remote Advanced, polycarbonate"

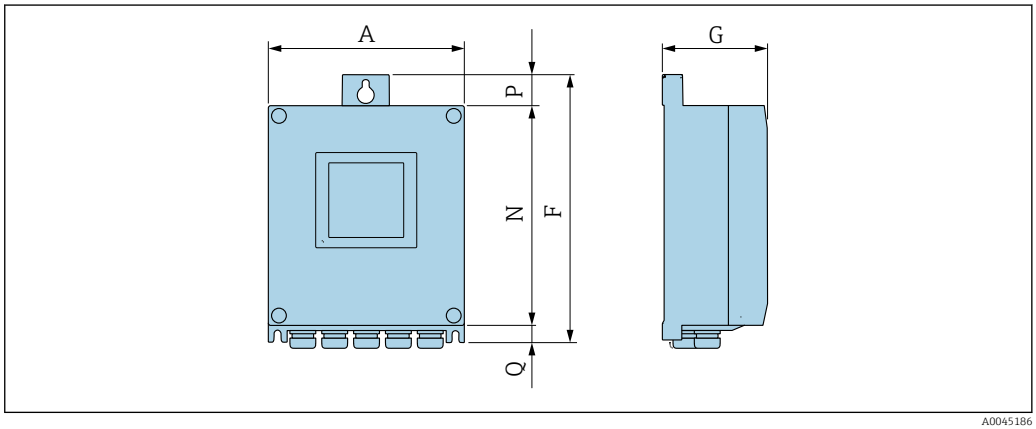

A0045186

A [mm]	F [mm]	G [mm]	N [mm]	P [mm]	Q [mm]
167	232	80	187	24	21

Sensor connection housing

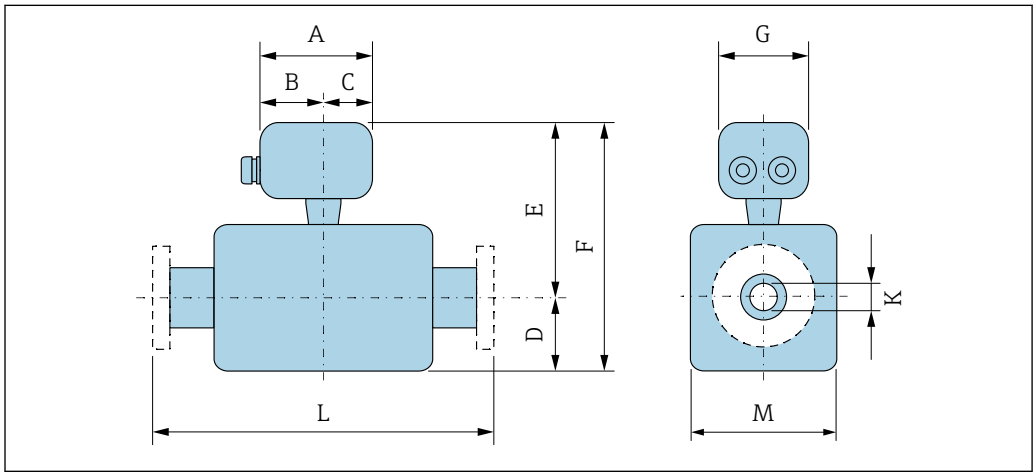

Order code for "Sensor connection housing", option D "Polycarbonate"

A [mm]	B [mm]	C [mm]	G [mm]
113	62	51	112

DN 25 to 300 mm (1 to 12 in): Sensor with aluminum half-shell housing

DN		Order code for "Design"									
		Options D, E				Option C					
		D [1]	E [1]	F [1]	M [1]	D [1]	E [1]	F [1]	M [1]	K	L
[mm]	[in]	[mm]	[mm]	[mm]	[mm]	[mm]	[mm]	[mm]	[mm]	[mm]	[mm]
25	1	84	200	284	120	–	–	–	–	[2]	200
32	–	84	200	284	120	–	–	–	–	[2]	200
40	1 ½	84	200	284	120	–	–	–	–	[2]	200
50	2	84	200	284	120	84	200	284	120	[2]	200
65	–	109	225	334	180	84	200	284	120	[2]	200
80	3	109	225	334	180	84	200	284	120	[2]	200
100	4	109	225	334	180	109	225	334	180	[2]	250
125	–	150	265	415	260	109	225	334	180	[2]	250
150	6	150	265	415	260	109	225	334	180	[2]	300
200	8	180	290	470	324	150	265	415	260	[2]	350
250	10	205	315	520	400	150	265	415	260	[2]	450
300	12	230	340	570	460	180	290	470	324	[2]	500

1) The dimensions are reference values. They may vary depending on the pressure rating, design and order option.
2) Depends on the liner → 🖹 78

DN 25 to 300 mm (1 to 12 in): Sensor with fully welded carbon steel housing

DN		Order code for "Design"									
		Option E				Option C					
		D [1]	E [1]	F [1]	M [1]	D [1]	E [1]	F [1]	M [1]	K	L
[mm]	[in]	[mm]	[mm]	[mm]	[mm]	[mm]	[mm]	[mm]	[mm]	[mm]	[mm]
25	1	70	200	270	140	–	–	–	–	[2]	200
32	–	70	200	270	140	–	–	–	–	[2]	200
40	1 ½	70	200	270	140	–	–	–	–	[2]	200
50	2	70	200	270	140	70	200	270	140	[2]	200
65	–	82	225	307	165	70	200	270	140	[2]	200
80	3	87	225	312	175	70	200	270	140	[2]	200
100	4	100	225	325	200	82	225	307	165	[2]	250
125	–	113	265	378	226	87	225	312	175	[2]	250
150	6	134	265	399	269	100	225	325	200	[2]	300
200	8	160	290	450	320	113	265	378	226	[2]	350
250	10	193	315	508	387	134	265	399	269	[2]	450
300	12	218	340	558	437	160	290	450	320	[2]	500

1) The dimensions are reference values. They may vary depending on the pressure rating, design and order option.
2) Depends on the liner → 78

DN 350 to 400 mm (14 to 16 in)

DN		Order code for "Design"					
		Option E					
		D [1]	E [1]	F [1]	M [1]	K	L
[mm]	[in]	[mm]	[mm]	[mm]	[mm]	[mm]	[mm]
350	14	282	379	679	564	[2]	550
375	15	308	423	731	616	[2]	550
400	16	308	423	731	616	[2]	600

1) The dimensions are reference values. They may vary depending on the pressure rating, design and order option.
2) Depends on the liner → 78

DN 450 to 900 mm (18 to 36 in)

DN		Order code for "Design"					
		Option G					
		D [1]	E [1]	F [1]	M [1]	K	L
[mm]	[in]	[mm]	[mm]	[mm]	[mm]	[mm]	[mm]
450	18	333	448	781	666	[2]	650
500	20	359	474	833	717	[2]	650
600	24	411	526	937	821	[2]	780
700	28	512	627	1139	1024	[2]	910
750	30	512	627	1139	1024	[2]	975

DN		Order code for "Design" Option G				K	L
		D [1]	E [1]	F [1]	M [1]		
[mm]	[in]	[mm]	[mm]	[mm]	[mm]	[mm]	[mm]
800	32	534	649	1 183	1 065	[2]	1 040
900	36	610	725	1 335	1 218	[2]	1 170

1) The dimensions are reference values. They may vary depending on the pressure rating, design and order option.
2) Depends on the liner → 🖹 78

Flange connections

Fixed flange

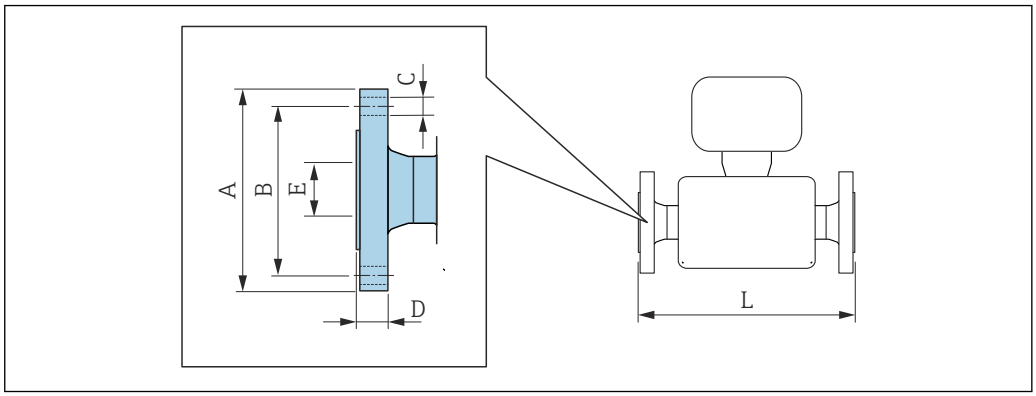

A0015621

Flange according to EN 1092-1 (DIN 2501 / DIN 2512N): PN 6 **Carbon steel:** *order code for "Process connection", option* **D1K** **Stainless steel:** *order code for "Process connection", option* **D1S**						
DN **[mm]**	**A** **[mm]**	**B** **[mm]**	**C** **[mm]**	**D** **[mm]**	**E** **[mm]**	**L** **[mm]**
350	490	445	12 × Ø22	22	1)	2)
400	540	495	16 × Ø22	22		
450	595	565	20 × Ø26	22		
500	645	600	20 × Ø22	24		
600	755	705	20 × Ø26	30		
700	860	810	24 × Ø26	30		
800	975	920	24 × Ø30	30		
900	1075	1020	24 × Ø30	34		
Surface roughness (flange): EN 1092-1 Form B1 (DIN 2526 Form C), Ra 6.3 to 12.5 µm						

1) Depends on the liner → 🖹 78
2) Total installed length is independent of the process connections. Length according to DVGW (German Technical and Scientific Association for Gas and Water) → 🖹 49 (compact version) → 🖹 52 (remote version)

Flange according to EN 1092-1 (DIN 2501 / DIN 2512N): PN 10 **Carbon steel:** *order code for "Process connection", option* **D2K** **Stainless steel:** *order code for "Process connection", option* **D2S**						
DN **[mm]**	**A** **[mm]**	**B** **[mm]**	**C** **[mm]**	**D** **[mm]**	**E** **[mm]**	**L** **[mm]**
200	340	295	8 × Ø22	24	1)	2)
250	395	350	12 × Ø22	26		
300	445	400	12 × Ø22	26		
350	505	460	16 × Ø22	26		
400	565	515	16 × Ø26	26		
450	615	565	20 × Ø26	28		
500	670	620	20 × Ø26	28		
600	780	725	20 × Ø30	30		
700	895	840	24 × Ø30	35		

Flange according to EN 1092-1 (DIN 2501 / DIN 2512N): PN 10
Carbon steel: *order code for "Process connection", option* **D2K**
Stainless steel: *order code for "Process connection", option* **D2S**

DN [mm]	A [mm]	B [mm]	C [mm]	D [mm]	E [mm]	L [mm]
800	1015	950	24 × Ø33	38		
900	1115	1050	28 × Ø33	38		
Surface roughness (flange): EN 1092-1 Form B1 (DIN 2526 Form C), Ra 6.3 to 12.5 µm						

1) Depends on the liner → 🖹 78
2) Total installed length is independent of the process connections. Length according to DVGW (German Technical and Scientific Association for Gas and Water) → 🖹 49 (compact version) → 🖹 52 (remote version)

Flange according to EN 1092-1 (DIN 2501 / DIN 2512N): PN 16
Carbon steel: *order code for "Process connection", option* **D3K**
Stainless steel: *order code for "Process connection", option* **D3S**

DN [mm]	A [mm]	B [mm]	C [mm]	D [mm]	E [mm]	L [mm]
65	185	145	8 × Ø18	20	1)	2)
80	200	160	8 × Ø18	20		
100	220	180	8 × Ø18	22		
125	250	210	8 × Ø18	24		
150	285	240	8 × Ø22	24		
200	340	295	12 × Ø22	26		
250	405	355	12 × Ø26	32		
300	460	410	12 × Ø26	32		
350	520	470	16 × Ø26	30		
400	580	525	16 × Ø30	32		
450	640	585	20 × Ø30	34		
500	715	650	20 × Ø33	36		
600	840	770	20 × Ø36	40		
700	910	840	24 × Ø36	40		
800	1025	950	24 × Ø39	41		
900	1125	1050	28 × Ø39	48		
Surface roughness (flange): EN 1092-1 Form B1 (DIN 2526 Form C), Ra 6.3 to 12.5 µm						

1) Depends on the liner → 🖹 78
2) Total installed length is independent of the process connections. Length according to DVGW (German Technical and Scientific Association for Gas and Water) → 🖹 49 (compact version) → 🖹 52 (remote version)

Flange according to EN 1092-1 (DIN 2501 / DIN 2512N): PN 25
Carbon steel: *order code for "Process connection", option* **D4K**
Stainless steel: *order code for "Process connection", option* **D4S**

DN [mm]	A [mm]	B [mm]	C [mm]	D [mm]	E [mm]	L [mm]
200	360	310	12 × Ø26	32	1)	2)
250	425	370	12 × Ø30	36		
300	485	430	16 × Ø30	40		

Flange according to EN 1092-1 (DIN 2501 / DIN 2512N): PN 25
Carbon steel: *order code for "Process connection", option* **D4K**
Stainless steel: *order code for "Process connection", option* **D4S**

DN [mm]	A [mm]	B [mm]	C [mm]	D [mm]	E [mm]	L [mm]
350	555	490	16 × Ø33	38		
400	620	550	16 × Ø36	40		
450	670	600	20 × Ø36	46		
500	730	660	20 × Ø36	48		
600	845	770	20 × Ø39	48		
700	960	875	24 × Ø42	50		
800	1085	990	24 × Ø48	53		
900	1185	1090	28 × Ø48	57		
Surface roughness (flange): EN 1092-1 Form B1 (DIN 2526 Form C), Ra 6.3 to 12.5 µm						

1) Depends on the liner → 🖹 78
2) Total installed length is independent of the process connections. Length according to DVGW (German Technical and Scientific Association for Gas and Water) → 🖹 49 (compact version) → 🖹 52 (remote version)

Flange according to EN 1092-1 (DIN 2501 / DIN 2512N): PN 40
Carbon steel: *order code for "Process connection", option* **D5K**
Stainless steel: *order code for "Process connection", option* **D5S**

DN [mm]	A [mm]	B [mm]	C [mm]	D [mm]	E [mm]	L [mm]
25	115	85	4 × Ø14	16	1)	2)
32	140	100	4 × Ø18	18		
40	150	110	4 × Ø18	18		
50	165	125	4 × Ø18	20		
65	185	145	8 × Ø18	24		
80	200	160	8 × Ø18	26		
100	235	190	8 × Ø22	26		
125	270	220	8 × Ø26	28		
150	300	250	8 × Ø26	30		
Surface roughness (flange): EN 1092-1 Form B1 (DIN 2526 Form C), Ra 6.3 to 12.5 µm						

1) Depends on the liner → 🖹 78
2) Total installed length is independent of the process connections. Length according to DVGW (German Technical and Scientific Association for Gas and Water) → 🖹 49 (compact version) → 🖹 52 (remote version)

Flange according to ASME B16.5, Class 150
Carbon steel: *order code for "Process connection", option* **A1K**
Stainless steel: *order code for "Process connection", option* **A1S**

DN		A	B	C	D	E	L
[mm]	[in]	[mm]	[mm]	[mm]	[mm]	[mm]	[mm]
25	1	108	79.2	4 × Ø16	12.6	1)	2)
40	1 ½	127	98.6	4 × Ø16	15.9		
50	2	152.4	120.7	4 × Ø19.1	17.5		
80	3	190.5	152.4	4 × Ø19.1	22.3		

Flange according to ASME B16.5, Class 150
Carbon steel: *order code for "Process connection", option* **A1K**
Stainless steel: *order code for "Process connection", option* **A1S**

DN		A	B	C	D	E	L
[mm]	[in]	[mm]	[mm]	[mm]	[mm]	[mm]	[mm]
100	4	228.6	190.5	8 × Ø19.1	22.3		
150	6	279.4	241.3	8 × Ø22.4	23.8		
200	8	342.9	298.5	8 × Ø22.4	26.8		
250	10	406.4	362	12 × Ø25.4	29.6		
300	12	482.6	431.8	12 × Ø25.4	30.2		
350	14	535	476.3	12 × Ø28.6	35.4		
400	16	595	539.8	16 × Ø28.6	37		
450	18	635	577.9	16 × Ø31.8	40.1		
500	20	700	635	20 × Ø31.8	43.3		
600	24	815	749.3	20 × Ø34.9	48.1		
Surface roughness (flange): Ra 6.3 to 12.5 µm							

1) Depends on the liner → 🖹 78
2) Total installed length is independent of the process connections. Length according to DVGW (German Technical and Scientific Association for Gas and Water) → 🖹 49 (compact version) → 🖹 52 (remote version)

Flange according to ASME B16.5, Class 300
Carbon steel: *order code for "Process connection", option* **A2K**
Stainless steel: *order code for "Process connection", option* **A2S**

DN		A	B	C	D	E	L
[mm]	[in]	[mm]	[mm]	[mm]	[mm]	[mm]	[mm]
25	1	123.9	88.9	4 × Ø19.1	15.9	1)	2)
40	1 ½	155.4	114.3	4 × Ø22.4	19		
50	2	165.1	127	8 × Ø19.1	20.8		
80	3	209.6	168.1	8 × Ø22.4	26.8		
100	4	254	200.2	8 × Ø22.4	30.2		
150	6	317.5	269.7	12 × Ø22.4	35		
Surface roughness (flange): Ra 6.3 to 12.5 µm							

1) Depends on the liner → 🖹 78
2) Total installed length is independent of the process connections. Length according to DVGW (German Technical and Scientific Association for Gas and Water) → 🖹 49 (compact version) → 🖹 52 (remote version)

Flange according to JIS B2220, 10K
Carbon steel: *order code for "Process connection", option* **N3K**
Stainless steel: *order code for "Process connection", option* **N3S**

DN [mm]	A [mm]	B [mm]	C [mm]	D [mm]	E [mm]	L [mm]
50	155	120	4 × Ø19	16	1)	2)
65	175	140	4 × Ø19	18		
80	185	150	8 × Ø19	18		
100	210	175	8 × Ø19	18		
125	250	210	8 × Ø23	20		

Flange according to JIS B2220, 10K
Carbon steel: *order code for "Process connection", option* **N3K**
Stainless steel: *order code for "Process connection", option* **N3S**

DN [mm]	A [mm]	B [mm]	C [mm]	D [mm]	E [mm]	L [mm]
150	280	240	8 × Ø23	22		
200	330	290	12 × Ø23	22		
250	400	355	12 × Ø25	24		
300	445	400	16 × Ø25	24		
Surface roughness (flange): Ra 6.3 to 12.5 µm						

1) Depends on the liner → 🖹 78
2) Total installed length is independent of the process connections. Length according to DVGW (German Technical and Scientific Association for Gas and Water) → 🖹 49 (compact version) → 🖹 52 (remote version)

Flange according to JIS B2220, 20K
Carbon steel: *order code for "Process connection", option* **N4K**
Stainless steel: *order code for "Process connection", option* **N4S**

DN [mm]	A [mm]	B [mm]	C [mm]	D [mm]	E [mm]	L [mm]
25	125	90	4 × Ø19	16	1)	2)
32	135	100	4 × Ø19	18		
40	140	105	4 × Ø19	18		
50	155	120	8 × Ø19	18		
65	175	140	8 × Ø19	20		
80	200	160	8 × Ø23	22		
100	225	185	8 × Ø23	24		
125	270	225	8 × Ø25	26		
150	305	260	12 × Ø25	28		
200	350	305	12 × Ø25	30		
250	430	380	12 × Ø27	34		
300	480	430	16 × Ø27	36		
Surface roughness (flange): Ra 6.3 to 12.5 µm						

1) Depends on the liner → 🖹 78
2) Total installed length is independent of the process connections. Length according to DVGW (German Technical and Scientific Association for Gas and Water) → 🖹 49 (compact version) → 🖹 52 (remote version)

Flange according to AS 2129, Tab. E
Order code for "Process connection", option **M2K**

DN [mm]	A [mm]	B [mm]	C [mm]	D [mm]	E [mm]	L [mm]
80	185	146	4 × Ø18	12	1)	2)
100	215	178	8 × Ø18	13		
150	280	235	8 × Ø22	17		
200	335	292	8 × Ø22	19		
250	405	356	12 × Ø22	22		
300	455	406	12 × Ø26	25		

Flange according to AS 2129, Tab. E
Order code for "Process connection", option **M2K**

DN [mm]	A [mm]	B [mm]	C [mm]	D [mm]	E [mm]	L [mm]
350	525	470	12 × Ø26	30		
400	580	521	12 × Ø26	32		
450	640	584	16 × Ø26	35		
500	705	641	16 × Ø26	38		
600	825	756	16 × Ø33	48		
700	910	845	20 × Ø33	51		
750	995	927	20 × Ø36	54		
800	1060	984	20 × Ø36	54		
900	1175	1092	24 × Ø36	64		
Surface roughness (flange): Ra 6.3 to 12.5 µm						

1) Depends on the liner → 🖹 78
2) Total installed length is independent of the process connections. Length according to DVGW (German Technical and Scientific Association for Gas and Water) → 🖹 49 (compact version) → 🖹 52 (remote version)

Flange according to AS 4087, PN 16
Order code for "Process connection", option **M3K**

DN [mm]	A [mm]	B [mm]	C [mm]	D [mm]	E [mm]	L [mm]
80	185	146	4 × Ø18	12	1)	2)
100	215	178	4 × Ø18	13		
150	280	235	8 × Ø18	13		
200	335	292	8 × Ø18	19		
250	405	356	8 × Ø22	19		
300	455	406	12 × Ø22	23		
350	525	470	12 × Ø26	30		
375	550	495	12 × Ø26	30		
400	580	521	12 × Ø26	32		
450	640	584	12 × Ø26	30		
500	705	641	16 × Ø26	38		
600	825	756	16 × Ø30	48		
700	910	845	20 × Ø30	56		
750	995	927	20 × Ø33	56		
800	1060	984	20 × Ø36	56		
Surface roughness (flange): Ra 6.3 to 12.5 µm						

1) Depends on the liner → 🖹 78
2) Total installed length is independent of the process connections. Length according to DVGW (German Technical and Scientific Association for Gas and Water) → 🖹 49 (compact version) → 🖹 52 (remote version)

Lap joint flange

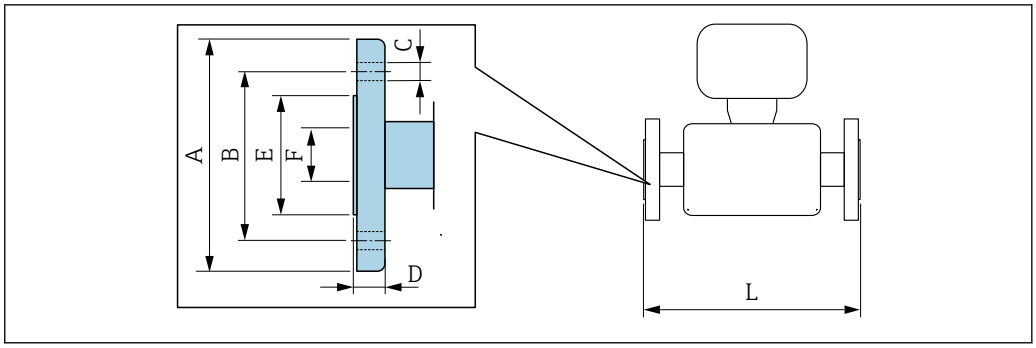

A0037862

Lap joint flange similar to EN 1092-1 (DIN 2501/ DIN 2512N): PN 10 **Carbon steel:** *order code for "Process connection", option* **D22** **Stainless steel:** *order code for "Process connection", option* **D24**								
DN		**A**	**B**	**C**	**D**	**E**	**F**	**L**
[mm]	**[in]**	**[mm]**	**[mm]**	**[mm]**	**[mm]**	**[mm]**	**[mm]**	**[mm]**
200	8	340	295	8 × Ø22	24	264	1)	2)
250	10	395	350	12 × Ø22	26	317		
300	12	445	400	12 × Ø22	26	367		
Surface roughness (flange): Ra 6.3 to 12.5 µm								

1) Depends on the liner → 🖹 78
2) Total length is independent of the process connections. Installed length according to DVGW (German Technical and Scientific Association for Gas and Water)

Lap joint flange similar to EN 1092-1 (DIN 2501/DIN 2512N): PN 16 **Carbon steel:** *order code for "Process connection", option* **D32** **Stainless steel:** *order code for "Process connection", option* **D34**								
DN		**A**	**B**	**C**	**D**	**E**	**F**	**L**
[mm]	**[in]**	**[mm]**	**[mm]**	**[mm]**	**[mm]**	**[mm]**	**[mm]**	**[mm]**
25	1	115	85	4 × Ø14	16	49	1)	2)
32	-	140	100	4 × Ø18	18	65		
40	1 ½	150	110	4 × Ø18	18	71		
50	2	165	125	4 × Ø18	20	88		
65	-	185	145	8 × Ø18	20	103		
80	3	200	160	8 × Ø18	20	120		
100	4	220	180	8 × Ø18	22	148		
125	-	250	210	8 × Ø18	22	177		
150	6	285	240	8 × Ø22	24	209		
200	8	340	295	12 × Ø22	26	264		
250	10	405	355	12 × Ø26	29	317		
300	12	460	410	12 × Ø26	32	367		
Surface roughness (flange): Ra 6.3 to 12.5 µm								

1) Depends on the liner → 🖹 78
2) Total length is independent of the process connections. Installed length according to DVGW (German Technical and Scientific Association for Gas and Water)

Lap joint flange according to ASME B16.5, Class 150
Carbon steel: *order code for "Process connection", option* **A12**
Stainless steel: *order code for "Process connection", option* **A14**

DN		A	B	C	D	E	F	L
[mm]	[in]	[mm]	[mm]	[mm]	[mm]	[mm]	[mm]	[mm]
25	1	110	80	4 × Ø16	14	49	1)	2)
40	1 ½	125	98	4 × Ø16	17.5	71		
50	2	150	121	4 × Ø19	19	88		
80	3	190	152	4 × Ø19	24	120		
100	4	230	190	8 × Ø19	24	148		
150	6	280	241	8 × Ø23	25	209		
200	8	345	298	8 × Ø23	29	264		
250	10	405	362	12 × Ø25	30	317		
300	12	485	432	12 × Ø25	32	378		
Surface roughness (flange): Ra 6.3 to 12.5 µm								

1) Depends on the liner → 🖹 78
2) Total length is independent of the process connections. Installed length according to DVGW (German Technical and Scientific Association for Gas and Water)

Lap joint flange, stamped plate

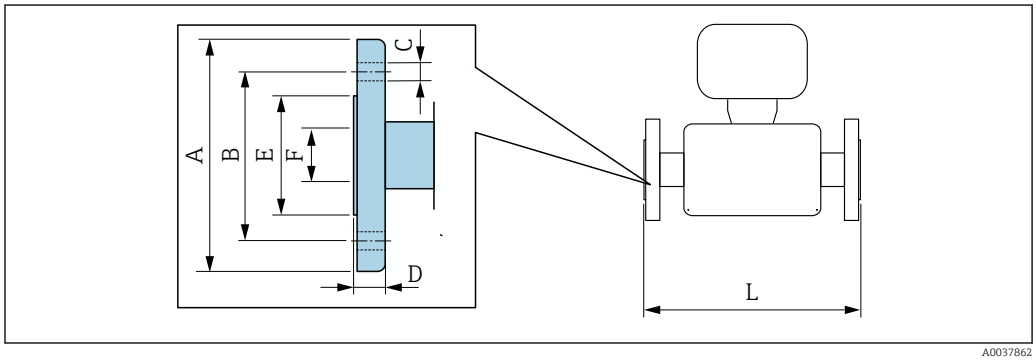

A0037862

Unassembled lap joint flange similar to EN 1092-1 (DIN 2501/DIN 2512N): PN 10
Carbon steel: *order code for "Process connection", option* **D21**
Stainless steel: *order code for "Process connection", option* **D23**

DN	A	B	C	D	E	F	L
[mm]	[mm]	[mm]	[mm]	[mm]	[mm]	[mm]	[mm]
25	115	85	4 x Ø13.5	16.5	49	1)	2)
32	140	100	4 x Ø17.5	17	65		
40	150	110	4 x Ø17.5	16.5	71		
50	165	125	4 x Ø17.5	18.5	88		
65	185	145	4 x Ø17.5	20	103		
80	200	160	8 x Ø17.5	23.5	120		
100	220	180	8 x Ø17.5	24.5	148		
125	250	210	8 x Ø17.5	24	177		
150	285	240	8 x Ø21.5	25	209		
200	340	295	8 x Ø21.5	27.5	264		
250	405	350	12 x Ø21.5	30.5	317		

Unassembled lap joint flange similar to EN 1092-1 (DIN 2501/DIN 2512N): PN 10 **Carbon steel:** *order code for "Process connection", option* **D21** **Stainless steel:** *order code for "Process connection", option* **D23**							
DN **[mm]**	**A** **[mm]**	**B** **[mm]**	**C** **[mm]**	**D** **[mm]**	**E** **[mm]**	**F** **[mm]**	**L** **[mm]**
300	445	400	12 x Ø21.5	34.5	367		
Surface roughness (flange): Ra 6.3 to 12.5 µm							

1) Depends on the liner → 78
2) Total length is independent of the process connections. Installed length according to DVGW (German Technical and Scientific Association for Gas and Water)

Accessories

Protective cover

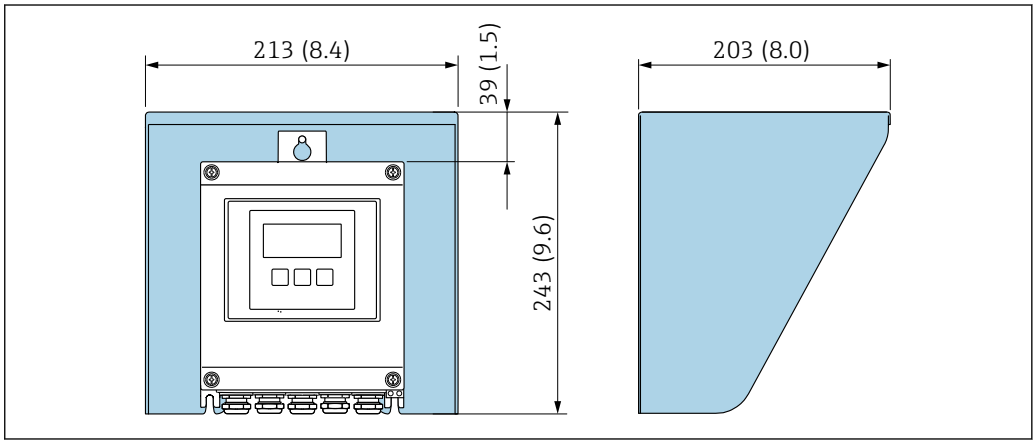

26 Weather protection cover; engineering unit mm (in)

Ground disks for flange connections

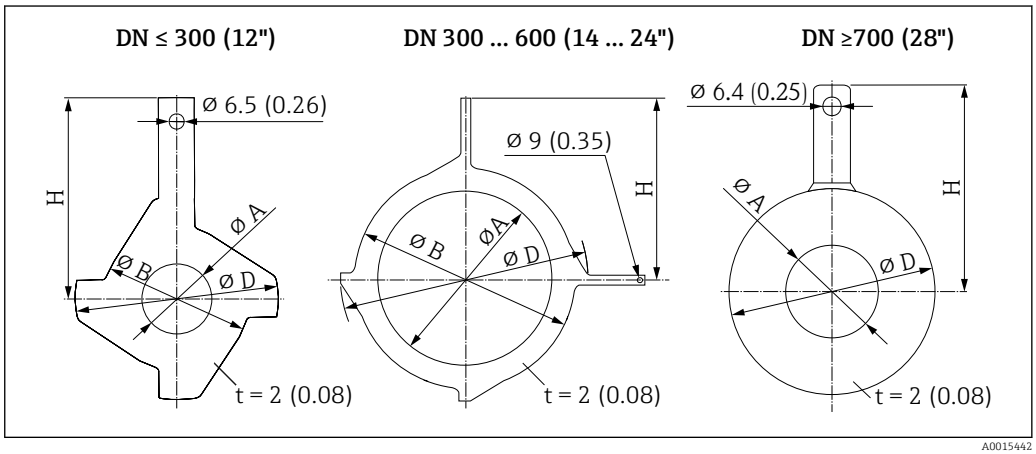

DN		**Pressure rating**	**A**		**B**		**D**		**H**	
[mm]	**[inch]**		**[mm]**	**[inch]**	**[mm]**	**[inch]**	**[mm]**	**[inch]**	**[mm]**	**[inch]**
25	1"	1)	26	1.02	62	2.44	77.5	3.05	87.5	3.44
32	1 ¼"	1)	35	1.38	80	3.15	87.5	3.44	94.5	3.72
40	1 ½"	1)	41	1.61	82	3.23	101	3.98	103	4.06
50	2"	1)	52	2.05	101	3.98	115.5	4.55	108	4.25

DN		Pressure rating	A		B		D		H	
[mm]	[inch]		[mm]	[inch]	[mm]	[inch]	[mm]	[inch]	[mm]	[inch]
65	2 ½"	[1]	68	2.68	121	4.76	131.5	5.18	118	4.65
80	3"	[1]	80	3.15	131	5.16	154.5	6.08	135	5.31
100	4"	[1]	104	4.09	156	6.14	186.5	7.34	153	6.02
125	5"	[1]	130	5.12	187	7.36	206.5	8.13	160	6.30
150	6"	[1]	158	6.22	217	8.54	256	10.08	184	7.24
200	8"	[1]	206	8.11	267	10.51	288	11.34	205	8.07
250	10"	[1]	260	10.2	328	12.91	359	14.13	240	9.45
300	12"	PN 10 PN 16 Cl. 150	312	12.3	375	14.76	413	16.26	273	10.75
		PN 25 JIS 10K JIS 20K	310	12.2	375	14.76	404	15.91	268	10.55
350	14"	PN 6	343	13.5	420	16.54	479	18.86	365	14.37
		PN 10								
		PN 16								
375	15"	PN 16	393	15.5	461	18.2	523	20.6	395	15.6
400	16"	PN 6	393	15.5	470	18.50	542	21.34	395	15.55
		PN 10								
		PN 16								
450	18"	PN 6	439	17.3	525	20.67	583	22.95	417	16.42
		PN 10								
		PN 16								
500	20"	PN 6	493	19.4	575	22.64	650	25.59	460	18.11
		PN 10								
		PN 16								
600	24"	PN 6	593	23.3	676	26.61	766	30.16	522	20.55
		PN 10								
		PN 16								
700	28"	PN 6	697	27.4	–	–	786	30.94	460	18.11
		PN10	693	27.3	–	–	813	32.01	480	18.9
		PN16	687	27.1	–	–	807	31.77	490	19.29
		Cl, D	693	27.3	–	–	832	32.76	494	19.45
750	30"	Cl, D	743	29.3	–	–	883	34.76	523	20.59
800	32"	PN 6	799	31.5	–	–	893	35.16	520	20.47
		PN 10	795	31.3	–	–	920	36.22	540	21.26
		PN 16	789	31.1	–	–	914	35.98	550	21.65
		Cl, D	795	31.3	–	–	940	37.01	561	22.09
900	36"	PN 6	897	35.3	–	–	993	39.09	570	22.44
		PN 10	893	35.2	–	–	1020	40.16	590	23.23

DN		Pressure rating	A		B		D		H	
[mm]	[inch]		[mm]	[inch]	[mm]	[inch]	[mm]	[inch]	[mm]	[inch]
		PN 16	886	34.9	–	–	1014	39.92	595	23.43
		Cl, D	893	35.2	–	–	1048	41.26	615	24.21

1) In the case of DN 25 to 250, ground disks can be used for all the flange standards/pressure ratings which can be supplied in the standard version

Dimensions in US units

Compact version Proline Promag 800 - Standard

Order code for "Functionality", option A

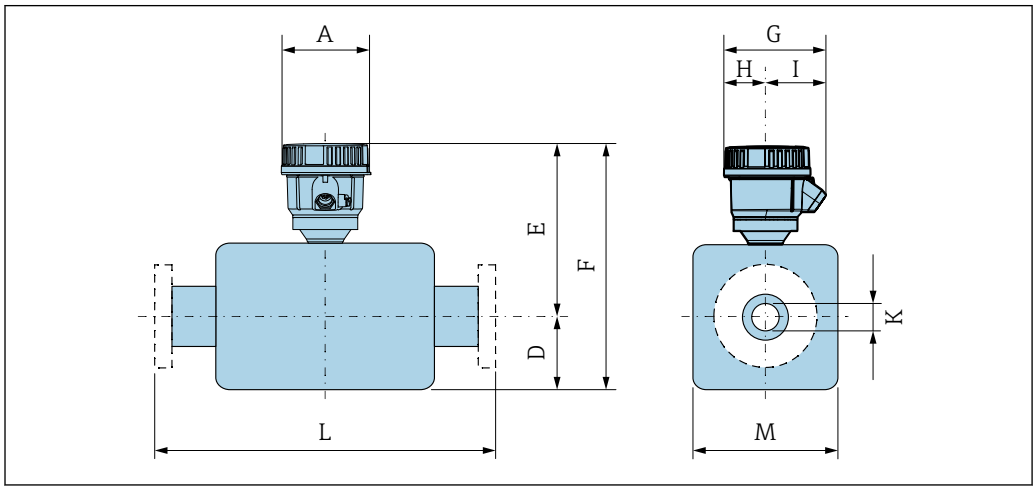

A0043200

A [in]	G [1] [in]	H [in]	I [1] [in]
5.04	6.1	2.42	3.68

1) Depending on the cable gland used: values up to + 1.18 in

DN 1 to 12 in (25 to 300 mm): Sensor with aluminum half-shell housing

DN		Order code for "Design"									
		Options D, E				Option C					
		D [1]	E [1]	F [1]	M [1]	D [1]	E [1]	F [1]	M [1]	K	L
[mm]	[in]	[in]	[in]	[in]	[in]	[in]	[in]	[in]	[in]	[in]	[in]
25	1	3.31	8.39	11.69	4.72	–	–	–	–	[2]	7.87
32	–	3.31	8.39	11.69	4.72	–	–	–	–	[2]	7.87
40	1 ½	3.31	8.39	11.69	4.72	–	–	–	–	[2]	7.87
50	2	3.31	8.39	11.69	4.72	3.31	7.91	11.22	4.72	[2]	7.87
65	–	4.29	9.37	13.66	7.09	3.31	7.91	11.22	4.72	[2]	7.87
80	3	4.29	9.37	13.66	7.09	3.31	7.91	11.22	4.72	[2]	7.87
100	4	4.29	9.37	13.66	7.09	4.29	8.9	13.19	7.09	[2]	9.84
125	–	5.91	10.94	16.85	10.24	4.29	8.9	13.19	7.09	[2]	9.84
150	6	5.91	10.94	16.85	10.24	4.29	8.9	13.19	7.09	[2]	11.81
200	8	7.09	11.93	19.02	12.76	5.91	10.47	16.38	10.24	[2]	13.78
250	10	8.07	12.91	20.98	15.75	5.91	10.47	16.38	10.24	[2]	17.72
300	12	9.06	13.9	22.95	18.11	7.09	11.46	18.54	12.76	[2]	19.69

1) The dimensions are reference values. They may vary depending on the pressure rating, design and order option.
2) Depends on the liner → 🖹 79

DN 25 to 300 (1 to 12"): fully welded sensor (IP66/67) only with order code for "Calibration flow", option 8 "Water custody transfer approval"

DN		Order code for "Design"								K	L
		Option E				Option C					
		D [1]	E [1]	F [1]	M [1]	D [1]	E [1]	F [1]	M [1]		
[mm]	[in]	[in]	[in]	[in]	[in]	[in]	[in]	[in]	[in]	[in]	[in]
25	1	2.76	8.46	11.22	5.51	–	–	–	–	[2]	7.87
32	–	2.76	8.46	11.22	5.51	–	–	–	–	[2]	7.87
40	1 ½	2.76	8.46	11.22	5.51	–	–	–	–	[2]	7.87
50	2	2.76	8.46	11.22	5.51	2.76	7.99	10.75	5.51	[2]	7.87
65	–	3.23	8.96	11.71	6.5	2.76	8.48	11.24	5.51	[2]	7.87
80	3	3.43	9.15	12.19	6.89	2.76	8.68	11.44	5.51	[2]	7.87
100	4	3.94	9.65	13.58	7.87	3.23	8.48	11.71	6.5	[2]	9.84
125	–	4.45	10.16	14.61	8.9	3.43	8.68	12.11	6.89	[2]	9.84
150	6	5.28	11	16.28	10.59	3.94	9.17	13.11	7.87	[2]	11.81
200	8	6.3	12.01	18.31	12.6	4.45	9.69	14.13	8.9	[2]	13.78
250	10	7.6	13.33	20.93	15.24	5.28	10.53	15.81	10.59	[2]	17.72
300	12	8.58	14.31	22.89	17.2	6.3	11.54	17.83	12.6	[2]	19.69

1) The dimensions are reference values. They may vary depending on the pressure rating, design and order option.
2) Depends on the liner → 🖹 79

DN 14 to 16 in (350 to 400 mm)

DN		Order code for "Design"				K	L
		Option E					
		D [1]	E [1]	F [1]	M [1]		
[mm]	[in]	[in]	[in]	[in]	[in]	[in]	[in]
350	14	11.10	15.39	27.2	22.20	[2]	21.65
375	15	12.13	17.13	29.25	24.25		23.62
400	16	12.13	17.13	29.25	24.25		23.62

1) The dimensions are reference values. They may vary depending on the pressure rating, design and order option.
2) Depends on the liner → 🖹 79

DN 18 to 24 in (450 to 600 mm)

DN		Order code for "Design"				K	L
		Options G					
		D	E	F	M		
[mm]	[in]	[in]	[in]	[in]	[in]	[in]	[in]
450	18	13.11	18.11	31.22	26.22	[1]	25.59
500	20	14.13	19.13	33.27	28.23	[1]	25.59
600	24	16.18	21.18	37.36	32.32	[1]	30.71

1) Depends on the liner → 🖹 79

Compact version Proline Promag 800 - Advanced

Order code for "Housing", option D "Compact; IP68, Type 6P; polycarbonate" or option E "Compact Advanced, polycarbonate"

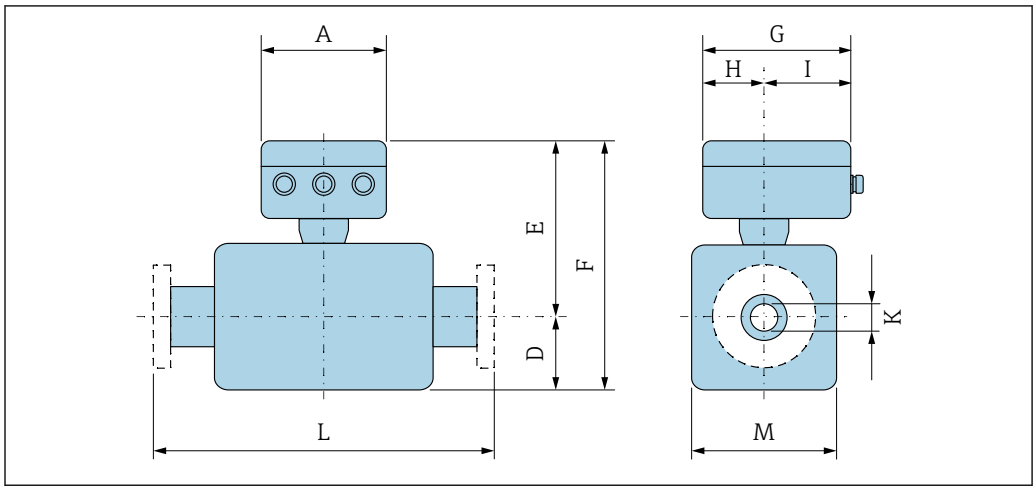

A [in]	G [1] [in]	H [in]	I [1] [in]
6.57	7.60	3.54	4.06

1) Depending on the cable gland used: values up to + 1.18 in

DN 1 to 12 in (25 to 300 mm): Sensor with aluminum half-shell housing

DN		Order code for "Design"									
		Options D, E				Option C					
		D [1]	E [1]	F [1]	M [1]	D [1]	E [1]	F [1]	M [1]	K	L
[mm]	[in]	[in]	[in]	[in]	[in]	[in]	[in]	[in]	[in]	[in]	[in]
25	1	3.31	7.91	11.22	4.72	–	–	–	–	[2]	7.87
32	–	3.31	7.91	11.22	4.72	–	–	–	–	[2]	7.87
40	1 ½	3.31	7.91	11.22	4.72	–	–	–	–	[2]	7.87
50	2	3.31	7.91	11.22	4.72	3.31	7.91	11.22	4.72	[2]	7.87
65	–	4.29	8.9	13.19	7.09	3.31	7.91	11.22	4.72	[2]	7.87
80	3	4.29	8.9	13.19	7.09	3.31	7.91	11.22	4.72	[2]	7.87
100	4	4.29	8.9	13.19	7.09	4.29	8.9	13.19	7.09	[2]	9.84
125	–	5.91	10.47	16.38	10.24	4.29	8.9	13.19	7.09	[2]	9.84
150	6	5.91	10.47	16.38	10.24	4.29	8.9	13.19	7.09	[2]	11.81
200	8	7.09	11.46	18.54	12.76	5.91	10.47	16.38	10.24	[2]	13.78
250	10	8.07	12.44	20.51	15.75	5.91	10.47	16.38	10.24	[2]	17.72
300	12	9.06	13.43	22.48	18.11	7.09	11.46	18.54	12.76	[2]	19.69

1) The dimensions are reference values. They may vary depending on the pressure rating, design and order option.
2) Depends on the liner → 🖹 79

DN 25 to 300 (1 to 12"): fully welded sensor (IP66/67)

DN		Order code for "Design"								K	L
		Option E				Option C					
		D [1]	E [1]	F [1]	M [1]	D [1]	E [1]	F [1]	M [1]		
[mm]	[in]	[in]	[in]	[in]	[in]	[in]	[in]	[in]	[in]	[in]	[in]
25	1	2.76	7.99	10.75	5.51	–	–	–	–	[2]	7.87
32	–	2.76	7.99	10.75	5.51	–	–	–	–	[2]	7.87
40	1 ½	2.76	7.99	10.75	5.51	–	–	–	–	[2]	7.87
50	2	2.76	7.99	10.75	5.51	2.76	7.99	10.75	5.51	[2]	7.87
65	–	3.23	8.48	11.71	6.5	2.76	8.48	11.24	5.51	[2]	7.87
80	3	3.43	8.68	12.11	6.89	2.76	8.68	11.44	5.51	[2]	7.87
100	4	3.94	9.17	13.11	7.87	3.23	8.48	11.71	6.5	[2]	9.84
125	–	4.45	9.69	14.13	8.9	3.43	8.68	12.11	6.89	[2]	9.84
150	6	5.28	10.53	15.81	10.59	3.94	9.17	13.11	7.87	[2]	11.81
200	8	6.3	11.54	17.83	12.6	4.45	9.69	14.13	8.9	[2]	13.78
250	10	7.6	12.85	20.45	15.24	5.28	10.53	15.81	10.59	[2]	17.72
300	12	8.58	13.84	22.42	17.2	6.3	11.54	17.83	12.6	[2]	19.69

1) The dimensions are reference values. They may vary depending on the pressure rating, design and order option.
2) Depends on the liner → 79

DN 14 to 16 in (350 to 400 mm)

DN		Order code for "Design" Option E				K	L
		D [1]	E [1]	F [1]	M [1]		
[mm]	[in]	[in]	[in]	[in]	[in]	[in]	[in]
350	14	11.10	15.63	26.73	22.20	[2]	21.65
375	15	12.13	16.65	28.78	24.25	[2]	23.62
400	16	12.13	16.65	28.78	24.25	[2]	23.62

1) The dimensions are reference values. They may vary depending on the pressure rating, design and order option.
2) Depends on the liner → 79

DN 18 to 36 in (450 to 900 mm)

DN		Order code for "Design" Options G				K	L
		D [1]	E [1]	F [1]	M [1]		
[mm]	[in]	[in]	[in]	[in]	[in]	[in]	[in]
450	18	13.11	17.64	30.75	26.22	[2]	25.59
500	20	14.13	18.66	32.80	28.23	[2]	25.59
600	24	16.18	20.71	36.89	32.32	[2]	30.71
700	28	20.16	24.69	44.84	40.31	[2]	35.83
750	30	20.16	24.69	44.84	40.31	[2]	38.39

DN		Order code for "Design" Options G				K	L
		D [1]	E [1]	F [1]	M [1]		
[mm]	[in]	[in]	[in]	[in]	[in]	[in]	[in]
800	32	21.02	25.55	46.57	41.93	[2]	40.94
900	36	24.02	28.54	52.56	47.95	[2]	46.06

1) The dimensions are reference values. They may vary depending on the pressure rating, design and order option.
2) Depends on the liner → 79

Remote version, Proline Promag 800 - Advanced

Transmitter remote version

Order code for "Housing", option F "Remote Advanced, polycarbonate"

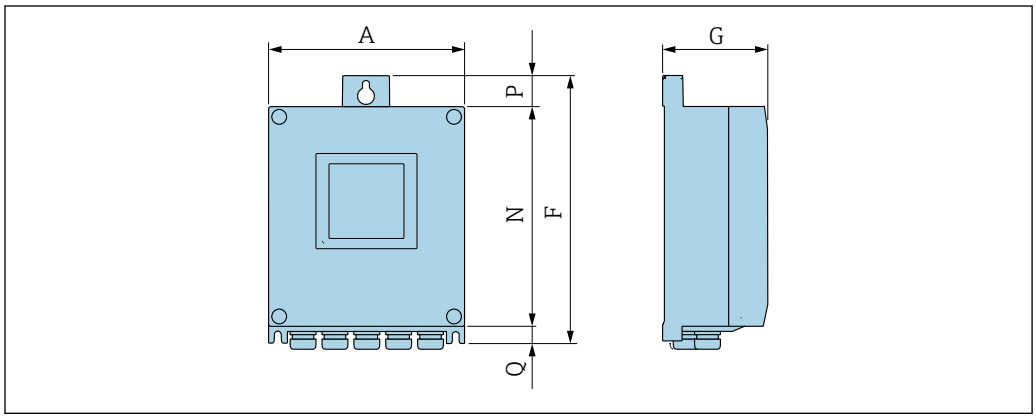

A0045186

A [in]	F [in]	G [in]	N [in]	P [in]	Q [in]
6.57	9.13	3.15	7.36	0.94	0.83

Sensor connection housing

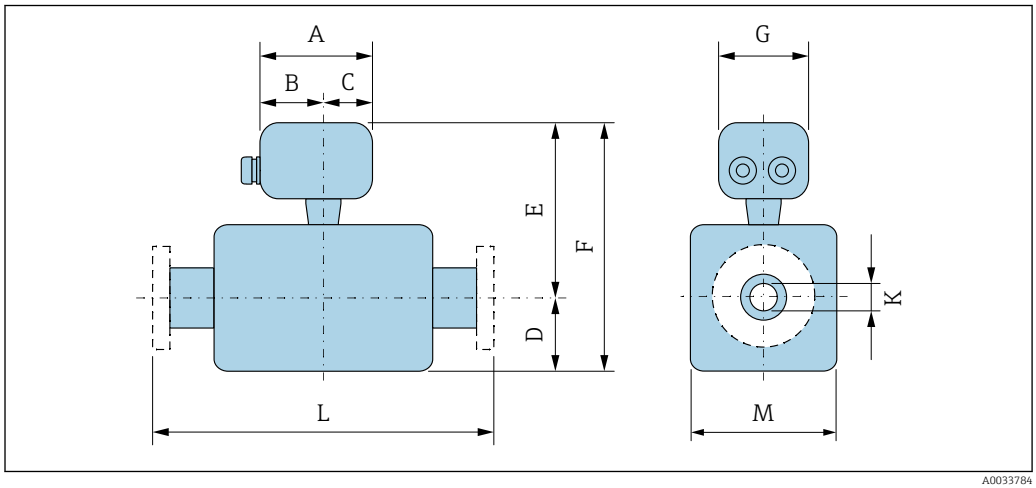

A0033784

Order code for "Sensor connection housing", option D "Polycarbonate"

A [in]	B [in]	C [in]	G [in]
4.45	2.44	2.01	4.41

DN 1 to 12 in (25 to 300 mm): Sensor with aluminum half-shell housing

DN		Order code for "Design"									
		Options D, E				Option C					
		D [1]	E [1]	F [1]	M [1]	D [1]	E [1]	F [1]	M [1]	K	L
[mm]	[in]	[in]	[in]	[in]	[in]	[in]	[in]	[in]	[in]	[in]	[in]
25	1	3.31	7.87	11.18	4.72	–	–	–	–	[2]	7.87
32	–	3.31	7.87	11.18	4.72	–	–	–	–	[2]	7.87
40	1 ½	3.31	7.87	11.18	4.72	–	–	–	–	[2]	7.87
50	2	3.31	7.87	11.18	4.72	3.31	7.87	11.18	4.72	[2]	7.87
65	–	4.29	8.86	13.15	7.09	3.31	7.87	11.18	4.72	[2]	7.87
80	3	4.29	8.86	13.15	7.09	3.31	7.87	11.18	4.72	[2]	7.87
100	4	4.29	8.86	13.15	7.09	4.29	8.86	13.15	7.09	[2]	9.84
125	–	5.91	10.43	16.34	10.24	4.29	8.86	13.15	7.09	[2]	9.84
150	6	5.91	10.43	16.34	10.24	4.29	8.86	13.15	7.09	[2]	11.81
200	8	7.09	11.42	18.5	12.76	5.91	10.43	16.34	10.24	[2]	13.78
250	10	8.07	12.4	20.47	15.75	5.91	10.43	16.34	10.24	[2]	17.72
300	12	9.06	13.39	22.44	18.11	7.09	11.42	18.5	12.76	[2]	19.69

1) The dimensions are reference values. They may vary depending on the pressure rating, design and order option.
2) Depends on the liner → 🖹 78

DN 1 to 12 in (25 to 300 mm): Sensor with fully welded carbon steel housing

DN		Order code for "Design"									
		Option E				Option C					
		D [1]	E [1]	F [1]	M [1]	D [1]	E [1]	F [1]	M [1]	K	L
[mm]	[in]	[mm]	[in]	[in]	[in]	[in]	[in]	[in]	[in]	[in]	[in]
25	1	2.76	7.87	10.63	5.51	–	–	–	–	[2]	7.87
32	–	2.76	7.87	10.63	5.51	–	–	–	–	[2]	7.87
40	1 ½	2.76	7.87	10.63	5.51	–	–	–	–	[2]	7.87
50	2	2.76	7.87	10.63	5.51	2.76	7.87	10.63	5.51	[2]	7.87
65	–	3.23	8.86	12.09	6.5	2.76	7.87	10.63	5.51	[2]	7.87
80	3	3.43	8.86	12.28	6.89	2.76	7.87	10.63	5.51	[2]	7.87
100	4	3.94	8.86	12.8	7.87	3.23	8.86	12.09	6.5	[2]	9.84
125	–	4.45	10.43	14.88	8.9	3.43	8.86	12.28	6.89	[2]	9.84
150	6	5.28	10.43	15.71	10.59	3.94	8.86	12.8	7.87	[2]	11.81
200	8	6.3	11.42	17.72	12.6	4.45	10.43	14.88	8.9	[2]	13.78

DN		Order code for "Design"									
		Option E				Option C					
		D [1]	E [1]	F [1]	M [1]	D [1]	E [1]	F [1]	M [1]	K	L
[mm]	[in]	[mm]	[in]	[in]	[in]	[in]	[in]	[in]	[in]	[in]	[in]
250	10	7.6	12.4	20	15.24	5.28	10.43	15.71	10.59	[2]	17.72
300	12	8.58	13.39	21.97	17.2	6.3	11.42	17.72	12.6	[2]	19.69

1) The dimensions are reference values. They may vary depending on the pressure rating, design and order option.
2) Depends on the liner → 🖹 78

DN 14 to 16 in (350 to 400 mm)

DN		Order code for "Design"					
		Option E					
		D [1]	E	F	M	K	L
[mm]	[in]	[in]	[in]	[in]	[in]	[in]	[in]
350	14	11.10	15.63	26.73	22.20	[2]	21.65
375	15	12.13	16.65	28.78	24.25	[2]	23.62
400	16	12.13	16.65	28.78	24.25	[2]	23.62

1) The dimensions are reference values. They may vary depending on the pressure rating, design and order option.
2) Depends on the liner → 🖹 79

DN 18 to 36 in (450 to 900 mm)

DN		Order code for "Design"					
		Option G					
		D [1]	E [1]	F [1]	M [1]	K	L
[mm]	[in]	[in]	[in]	[in]	[in]	[in]	[in]
450	18	13.11	17.64	30.75	26.22	[2]	25.59
500	20	14.13	18.66	32.80	28.23	[2]	25.59
600	24	16.18	20.71	36.89	32.32	[2]	30.71
700	28	20.16	24.69	44.84	40.31	[2]	35.83
750	30	20.16	24.69	44.84	40.31	[2]	38.39
800	32	21.02	25.55	46.57	41.93	[2]	40.94
900	36	24.02	28.54	52.56	47.95	[2]	46.06

1) The dimensions are reference values. They may vary depending on the pressure rating, design and order option.
2) Depends on the liner → 🖹 79

Flange connections

Fixed flange

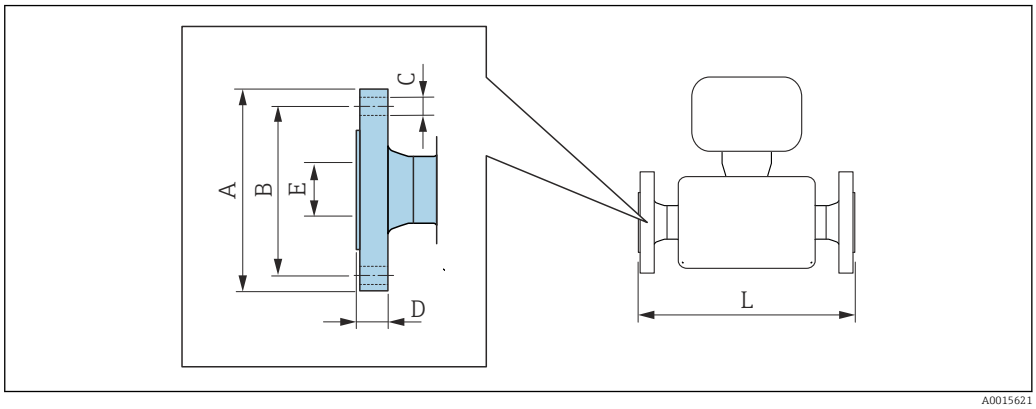

A0015621

Flange according to ASME B16.5, Class 150 **Carbon steel:** *order code for "Process connection", option* **A1K** **Stainless steel:** *order code for "Process connection", option* **A1S**							
DN		**A**	**B**	**C**	**D**	**E**	**L**
[mm]	**[in]**	**[in]**	**[in]**	**[in]**	**[in]**	**[in]**	**[in]**
25	1	4.25	3.12	4 × Ø0.63	0.5	1)	2)
40	1 ½	5	3.88	4 × Ø0.63	0.63		
50	2	6	4.75	4 × Ø0.75	0.69		
80	3	7.5	6	4 × Ø0.75	0.88		
100	4	9	7.5	8 × Ø0.75	0.88		
150	6	11	9.5	8 × Ø0.88	0.94		
200	8	13.5	11.75	8 × Ø0.88	1.06		
250	10	16	14.25	12 × Ø1	1.17		
300	12	19	17	12 × Ø1	1.19		
350	14	21.06	18.75	12 × Ø1.13	1.39		
400	16	23.43	21.25	16 × Ø1.13	1.46		
450	18	25	22.75	16 × Ø1.25	1.58		
500	20	27.56	25	20 × Ø1.25	1.7		
600	24	32.09	29.5	20 × Ø1.37	1.89		
Surface roughness (flange): Ra 250 to 492 µm							

1) Depends on the liner → 🖹 79
2) Total installed length is independent of the process connections. Length according to DVGW (German Technical and Scientific Association for Gas and Water) → 🖹 68 (compact version) → 🖹 70 (remote version)

Flange according to ASME B16.5, Class 300 **Carbon steel:** *order code for "Process connection", option* **A2K** **Stainless steel:** *order code for "Process connection", option* **A2S**							
DN		**A**	**B**	**C**	**D**	**E**	**L**
[in]	**[mm]**	**[in]**	**[in]**	**[in]**	**[in]**	**[in]**	**[in]**
1	25	4.88	3.5	4 × Ø0.75	0.63	1)	2)
1 ½	40	6.12	4.5	4 × Ø0.88	0.75		
2	50	6.5	5	8 × Ø0.75	0.82		

Flange according to ASME B16.5, Class 300
Carbon steel: *order code for "Process connection", option* **A2K**
Stainless steel: *order code for "Process connection", option* **A2S**

DN		A	B	C	D	E	L
[in]	[mm]	[in]	[in]	[in]	[in]	[in]	[in]
3	80	8.25	6.62	8 × Ø0.88	1.06		
4	100	10	7.88	8 × Ø0.88	1.19		
6	150	12.5	10.62	12 × Ø0.88	1.38		
Surface roughness (flange): Ra 250 to 492 µm							

1) Depends on the liner → 🖹 79
2) Total installed length is independent of the process connections. Length according to DVGW (German Technical and Scientific Association for Gas and Water) → 🖹 68 (compact version) → 🖹 70 (remote version)

Lap joint flange

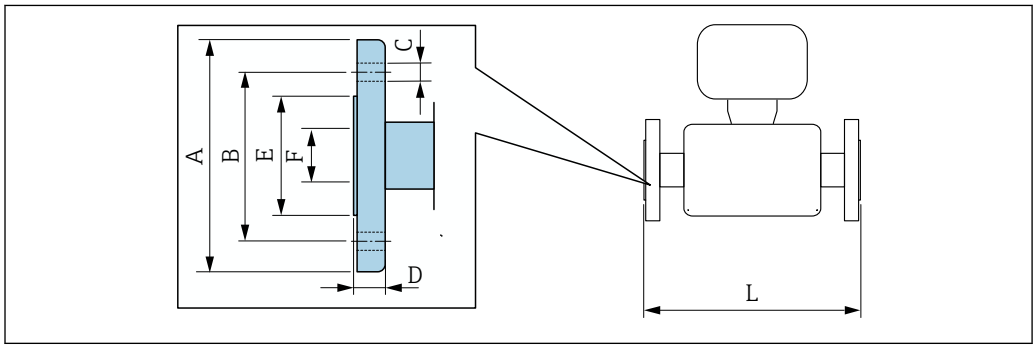

A0037862

Lap joint flange according to ASME B16.5, Class 150
Carbon steel: *order code for "Process connection", option* **A12**
Stainless steel: *order code for "Process connection", option* **A14**

DN		A	B	C	D	E	F	L
[mm]	[in]	[in]	[in]	[in]	[in]	[in]	[in]	[in]
25	1	4.33	3.15	4 × Ø0.63	0.55	1.93	1)	2)
40	1 ½	4.92	3.86	4 × Ø0.63	0.69	2.8		
50	2	5.91	4.76	4 × Ø0.75	0.75	3.46		
80	3	7.48	5.98	4 × Ø0.75	0.94	4.72		
100	4	9.06	7.48	8 × Ø0.75	0.94	5.83		
150	6	11.02	9.49	8 × Ø0.91	0.98	8.23		
200	8	13.58	11.73	8 × Ø0.91	1.14	10.39		
250	10	15.94	14.25	12 × Ø0.98	1.18	12.48		
300	12	19.09	17.01	12 × Ø0.98	1.26	14.88		
Surface roughness (flange): Ra 248 to 492 µin								

1) Depends on the liner → 🖹 78
2) Total length is independent of the process connections. Installed length according to DVGW (German Technical and Scientific Association for Gas and Water)

Accessories

Protective cover

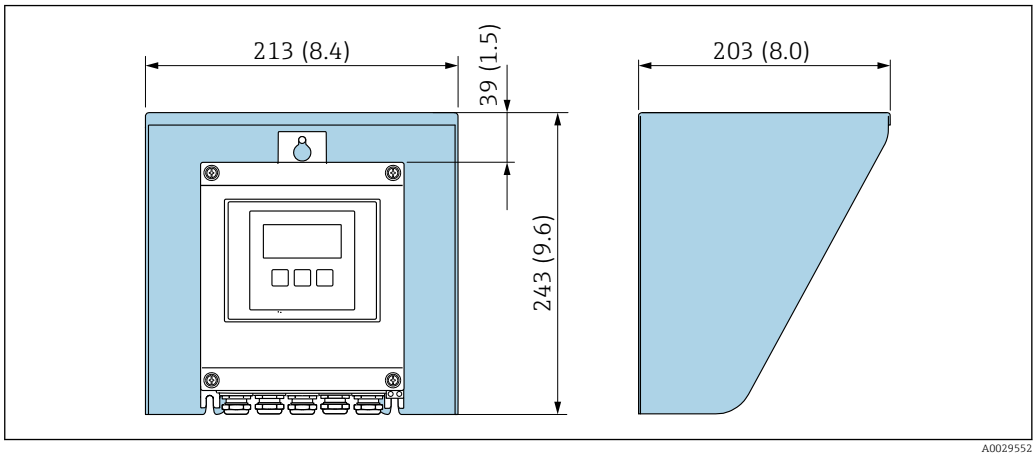

27 *Weather protection cover; engineering unit mm (in)*

Ground disks for flange connections

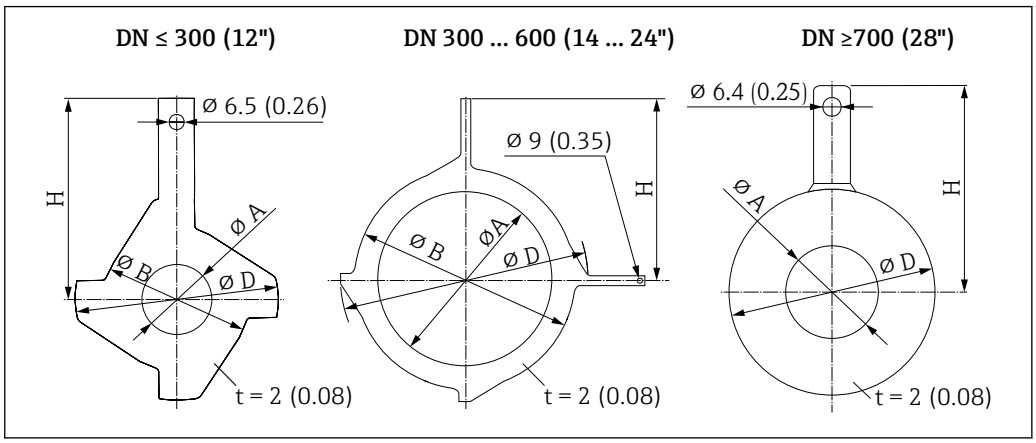

DN		Pressure rating	A		B		D		H	
[mm]	[inch]		[mm]	[inch]	[mm]	[inch]	[mm]	[inch]	[mm]	[inch]
25	1"	[1]	26	1.02	62	2.44	77.5	3.05	87.5	3.44
32	1 ¼"	[1]	35	1.38	80	3.15	87.5	3.44	94.5	3.72
40	1 ½"	[1]	41	1.61	82	3.23	101	3.98	103	4.06
50	2"	[1]	52	2.05	101	3.98	115.5	4.55	108	4.25
65	2 ½"	[1]	68	2.68	121	4.76	131.5	5.18	118	4.65
80	3"	[1]	80	3.15	131	5.16	154.5	6.08	135	5.31
100	4"	[1]	104	4.09	156	6.14	186.5	7.34	153	6.02
125	5"	[1]	130	5.12	187	7.36	206.5	8.13	160	6.30
150	6"	[1]	158	6.22	217	8.54	256	10.08	184	7.24
200	8"	[1]	206	8.11	267	10.51	288	11.34	205	8.07
250	10"	[1]	260	10.2	328	12.91	359	14.13	240	9.45
300	12"	PN 10 PN 16 Cl. 150	312	12.3	375	14.76	413	16.26	273	10.75

DN		Pressure rating	A		B		D		H	
[mm]	[inch]		[mm]	[inch]	[mm]	[inch]	[mm]	[inch]	[mm]	[inch]
		PN 25 JIS 10K JIS 20K	310	12.2	375	14.76	404	15.91	268	10.55
350	14"	PN 6	343	13.5	420	16.54	479	18.86	365	14.37
		PN 10								
		PN 16								
375	15"	PN 16	393	15.5	461	18.2	523	20.6	395	15.6
400	16"	PN 6	393	15.5	470	18.50	542	21.34	395	15.55
		PN 10								
		PN 16								
450	18"	PN 6	439	17.3	525	20.67	583	22.95	417	16.42
		PN 10								
		PN 16								
500	20"	PN 6	493	19.4	575	22.64	650	25.59	460	18.11
		PN 10								
		PN 16								
600	24"	PN 6	593	23.3	676	26.61	766	30.16	522	20.55
		PN 10								
		PN 16								
700	28"	PN 6	697	27.4	–	–	786	30.94	460	18.11
		PN10	693	27.3	–	–	813	32.01	480	18.9
		PN16	687	27.1	–	–	807	31.77	490	19.29
		Cl, D	693	27.3	–	–	832	32.76	494	19.45
750	30"	Cl, D	743	29.3	–	–	883	34.76	523	20.59
800	32"	PN 6	799	31.5	–	–	893	35.16	520	20.47
		PN 10	795	31.3	–	–	920	36.22	540	21.26
		PN 16	789	31.1	–	–	914	35.98	550	21.65
		Cl, D	795	31.3	–	–	940	37.01	561	22.09
900	36"	PN 6	897	35.3	–	–	993	39.09	570	22.44
		PN 10	893	35.2	–	–	1020	40.16	590	23.23
		PN 16	886	34.9	–	–	1014	39.92	595	23.43
		Cl, D	893	35.2	–	–	1048	41.26	615	24.21

1) In the case of DN 25 to 250, ground disks can be used for all the flange standards/pressure ratings which can be supplied in the standard version

Weight

All values (weight exclusive of packaging material) refer to devices with flanges of the standard pressure rating.
The weight may be lower than indicated depending on the pressure rating and design.

Weight in SI units

Order code for "Design", option C, D, E : DN 25 to 400 mm (1 to 16 in)			
Nominal diameter		Reference values EN (DIN), AS, JIS	
[mm]	[in]	Pressure rating	[kg]
25	1	PN 40	10
32	–	PN 40	11
40	1 ½	PN 40	12
50	2	PN 40	13
65	–	PN 16	13
80	3	PN 16	15
100	4	PN 16	18
125	–	PN 16	25
150	6	PN 16	31
200	8	PN 10	52
250	10	PN 10	81
300	12	PN 10	95
350	14	PN 6	106
375	15	PN 6	121
400	16	PN 6	121

Order code for "Design", option G: DN 450 to 900 mm (18 to 36 in)		
Nominal diameter		Reference values EN (DIN) (PN 6)
[mm]	[in]	[kg]
450	18	161
500	20	156
600	24	208
700	28	304
–	30	–
800	32	357
900	36	485

Weight in US units

Order code for "Design", option C, D, E: DN 1 to 16 in (25 to 400 mm)		
Nominal diameter		Reference values ASME (Class 150)
[mm]	[in]	[lb]
25	1	11
32	–	–

Order code for "Design", option C, D, E: DN 1 to 16 in (25 to 400 mm)		
Nominal diameter		Reference values ASME (Class 150)
[mm]	[in]	[lb]
40	1 ½	15
50	2	20
65	–	–
80	3	31
100	4	42
125	–	–
150	6	73
200	8	115
250	10	198
300	12	284
350	14	379
375	15	–
400	16	448

Order code for "Design", option G: DN 18 to 36 in (450 to 900 mm)		
Nominal diameter		Reference values ASME (Class 150)
[mm]	[in]	[lb]
450	18	562
500	20	628
600	24	893
700	28	882
–	30	1014
800	32	1213
900	36	1764

Measuring tube specification in SI units

HR = hard rubber, PUR = polyurethane, PTFE = polytetrafluorethylene

Nominal diameter		Pressure rating				Measuring tube internal diameter		
		EN (DIN)	ASME	AS 2129 AS 4087	JIS	HR	PUR	PTFE
[mm]	[in]					[mm]	[mm]	[mm]
25	1	PN 40	Class 150	–	20K	–	24	25
32	–	PN 40	–	–	20K	–	32	34
40	1 ½	PN 40	Class 150	–	20K	–	38	40
50	2	PN 40	Class 150	Table E, PN 16	10K	50	50	52
50 [1)]	2	PN 40	Class 150	Table E, PN 16	10K	32	–	–
65	–	PN 16	–	–	10K	66	66	68
65 [1)]	–	PN 16	–	–	10K	38	–	–
80	3	PN 16	Class 150	Table E, PN 16	10K	79	79	80
80 [1)]	3	PN 16	Class 150	Table E, PN 16	10K	50	–	–

Nominal diameter		Pressure rating				Measuring tube internal diameter		
		EN (DIN)	ASME	AS 2129 AS 4087	JIS	HR	PUR	PTFE
[mm]	[in]					[mm]	[mm]	[mm]
100	4	PN 16	Class 150	Table E, PN 16	10K	101	104	104
100 [1]	4	PN 16	Class 150	Table E, PN 16	10K	66	–	–
125	–	PN 16	–	–	10K	127	130	129
125 [1]	–	PN 16	–	–	10K	79	–	–
150	6	PN 16	Class 150	Table E, PN 16	10K	155	158	156
150 [1]	6	PN 16	Class 150	Table E, PN 16	10K	102	–	–
200	8	PN 10	Class 150	Table E, PN 16	10K	204	207	202
200 [1]	8	PN 16	Class 150	Table E, PN 16	10K	127	–	–
250	10	PN 10	Class 150	Table E, PN 16	10K	258	261	256
250 [1]	10	PN 16	Class 150	Table E, PN 16	10K	156	–	–
300	12	PN 10	Class 150	Table E, PN 16	10K	309	312	306
300 [1]	12	PN 16	Class 150	Table E, PN 16	10K	204	–	–
350	14	PN 10	Class 150	Table E, PN 16	10K	337	340	–
375	15	–	–	PN 16	10K	389	392	–
400	16	PN 10	Class 150	Table E, PN 16	10K	387	390	–
450	18	PN 10	Class 150	–	10K	436	439	–
500	20	PN 10	Class 150	Table E, PN 16	10K	487	490	–
600	24	PN 10	Class 150	Table E, PN 16	10K	585	588	–
700	28	PN 10	Class D	Table E, PN 16	10K	694	697	–
750	30	–	Class D	Table E, PN 16	10K	743	746	–
800	32	PN 10	Class D	Table E, PN 16	–	794	797	–
900	36	PN 10	Class D	Table E, PN 16	–	895	898	–

1) Order code for "Design", option C

Measuring tube specification in US units

HR = hard rubber, PUR = polyurethane, PTFE = polytetrafluorethylene

Nominal diameter		Pressure rating	Measuring tube internal diameter		
		ASME	HR	PUR	PTFE
[mm]	[in]		[in]	[in]	[in]
25	1	Class 150	–	0.93	1.00
40	1 ½	Class 150	–	1.51	1.57
50	2	Class 150	1.98	1.98	2.04
50 [1]	2	Class 150	1.26	–	–
80	3	Class 150	3.11	3.11	3.15
80 [1]	3	Class 150	1.97	–	–
100	4	Class 150	3.99	4.11	4.09
100 [1]	4	Class 150	2.60	–	–
150	6	Class 150	6.11	6.23	6.15
150 [1]	6	Class 150	4.02	–	–
200	8	Class 150	8.02	8.14	7.96

Nominal diameter		Pressure rating	Measuring tube internal diameter		
		ASME	HR	PUR	PTFE
[mm]	[in]		[in]	[in]	[in]
200 [1]	8	Class 150	5.00	–	–
250	10	Class 150	10.14	10.26	10.09
250 [1]	10	Class 150	6.14	–	–
300	12	Class 150	12.15	12.26	12.03
300 [1]	12	Class 150	8.03	–	–
350	14	Class 150	13.3	13.4	–
375	15	–	15.3	15.4	–
400	16	Class 150	15.2	15.4	–
450	18	Class 150	17.2	17.3	–
500	20	Class 150	19.2	19.3	–
600	24	Class 150	23.0	23.1	–
700	28	Class D	27.3	27.4	–
750	30	Class D	29.3	29.4	–
800	32	Class D	31.3	31.4	–
900	36	Class D	35.2	35.4	–

1) Order code for "Design", option C

Materials

Transmitter housing

Compact version

- Housing material:
  Polycarbonate
- Window material:
  Polycarbonate

Remote version (wall-mount housing)

- Housing material:
  Polycarbonate
- Window material:
  Polycarbonate

Sensor connection housing

- Aluminum, AlSi10Mg, coated
- Polycarbonate plastic (only in conjunction with order code for "Sensor option", options CB ... CE)

Cable entries/cable glands

Compact and remote versions and sensor connection housing

Cable entry/cable gland	Material
Cable gland M20 × 1.5	Plastic
Remote version: cable gland M20 × 1.5 Option of armored connecting cable	▪ Sensor connection housing: Nickel-plated brass ▪ Transmitter wall-mount housing: Plastic
Adapter for cable entry with female thread G ½" or NPT ½"	Nickel-plated brass

Connecting cable for remote version

Electrode and coil current cable:
- Standard cable: PVC cable with copper shield
- Armored cable: PVC cable with copper shield and additional steel wire braided jacket

Sensor housing

- DN 25 to 300 (1 to 12")
  - Aluminum half-shell housing, aluminum, AlSi10Mg, coated
  - Fully welded carbon steel housing with protective varnish
- DN 350 to (14 to ")
  Fully welded carbon steel housing with protective varnish

Measuring tubes

- DN 25 to 600 (1 to 24")
  Stainless steel: 1.4301, 1.4306, 304, 304L
- DN 700 to 9003000 (28 to 36120")
  Stainless steel: 1.4301, 304

Liner

- DN 25 to 300 (1 to 12"): PTFE
- DN 25 to 900 (1 to 36"): polyurethane
- DN 50 to 900 (2 to 36"): hard rubber

Electrodes

- Stainless steel, 1.4435 (316L)
- Alloy C22, 2.4602 (UNS N06022)

Process connections

For flanges made of carbon steel:
- DN ≤ 300 (12"): with Al/Zn protective coating or protective varnish
- DN ≥ 350 (14"): protective varnish

All carbon steel lap joint flanges are supplied with a hot-dip galvanized finish.

EN 1092-1 (DIN 2501)

Fixed flange
- Carbon steel:
  - DN ≤ 300: S235JRG2, S235JR+N, P245GH, A105, E250C
  - DN 350 to 900: P245GH, S235JRG2, A105, E250C
- Stainless steel:
  - DN ≤ 300: 1.4404, 1.4571, F316L
  - DN 350 to 600: 1.4571, F316L, 1.4404
  - DN 700 to 900: 1.4404, F316L

Lap joint flange
- Carbon steel DN ≤ 300: S235JRG2, A105, E250C
- Stainless steel DN ≤ 300: 1.4306,1.4404, 1.4571, F316L

Lap joint flange, stamped plate
- Carbon steel DN ≤ 300: S235JRG2 similar to S235JR+AR or 1.0038
- Stainless steel DN ≤ 300: 1.4301 similar to 304

ASME B16.5

Fixed flange, lap joint flange
Carbon steel: A105

JIS B2220

Carbon steel: A105, A350 LF2

AS 2129

Carbon steel: A105, E250C, P235GH, P265GH, S235JRG2

AS 4087

Carbon steel: A105, P265GH, S275JR

Seals

As per DIN EN 1514-1, form IBC

Accessories

Ground disks

- Stainless steel, 1.4435 (316L)
- Alloy C22, 2.4602 (UNS N06022)

Fitted electrodes

Measurement, reference and empty pipe detection electrodes available as standard with:
- 1.4435 (316L)
- Alloy C22, 2.4602 (UNS N06022)

Process connections

- EN 1092-1 (DIN 2501)
- ASME B16.5
- JIS B2220
- AS 2129 Table E
- AS 4087 PN 16

For information on the different materials used in the process connections → 81

Surface roughness

Electrodes with 1.4435 (316L); Alloy C22, 2.4602 (UNS N06022): < 0.5 µm (19.7 µin)

(All data refer to parts in contact with the medium)

Operability

Local display

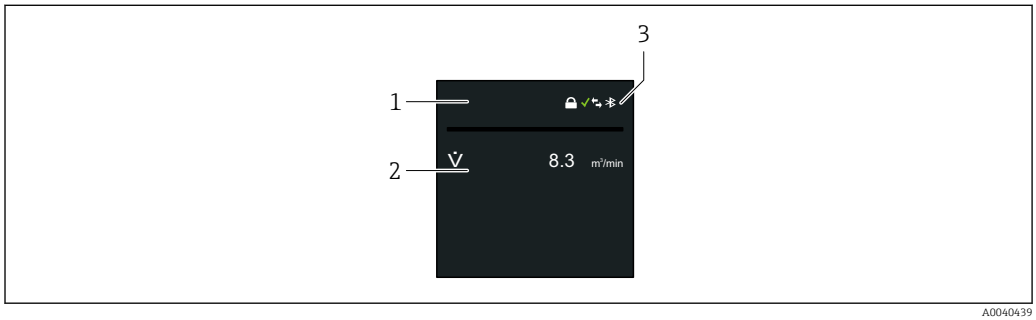

1 Tag name (configurable)
2 Measured variable 1 to 4 (configurable) with sign
3 Bluetooth connection active, device status, locking status, battery status, cellular network reception

Operation

Via Bluetooth® wireless technology

Digital communication

Modbus

SmartBlue app

The device has a *Bluetooth*® wireless technology interface and can be operated and configured using the SmartBlue app.

- The range under reference conditions is 10 m (33 ft).
- Incorrect operation by unauthorized persons is prevented by means of encrypted communication and password encryption.

Certificates and approvals

Current certificates and approvals for the product are available at www.endress.com on the relevant product page:

1. Select the product using the filters and search field.
2. Open the product page.
3. Select **Downloads**.

CE mark

The device meets the legal requirements of the applicable EU Directives. These are listed in the corresponding EU Declaration of Conformity along with the standards applied.

Endress+Hauser confirms successful testing of the device by affixing to it the CE mark.

UKCA marking

The device meets the legal requirements of the applicable UK regulations (Statutory Instruments). These are listed in the UKCA Declaration of Conformity along with the designated standards. By selecting the order option for UKCA marking, Endress+Hauser confirms a successful evaluation and testing of the device by affixing the UKCA mark.

Contact address Endress+Hauser UK:
Endress+Hauser Ltd.
Floats Road
Manchester M23 9NF
United Kingdom
www.uk.endress.com

RCM marking

The measuring system meets the EMC requirements of the "Australian Communications and Media Authority (ACMA)".

Drinking water approval

- ACS
- KTW/W270
- NSF 61
- WRAS BS 6920

Radio approval

The measuring device has radio approval.

For detailed information on the radio approval, see the Special Documentation → 88

Pressure Equipment Directive

The measuring devices can be ordered with or without PED or PESR. If a device with PED or PESR is required, this must be ordered explicitly. For devices with nominal diameters less than or equal to DN 25 (1"), this is neither possible nor necessary. A UK order option must be selected for PESR under the order code for "Approvals".

- With the marking
  a) PED/G1/x (x = category) or
  b) PESR/G1/x (x = category)
  on the sensor nameplate, Endress+Hauser confirms compliance with the "Essential Safety Requirements"
  a) specified in Annex I of the Pressure Equipment Directive 2014/68/EU or
  b) Schedule 2 of Statutory Instruments 2016 No. 1105.
- Devices bearing this marking (PED or PESR) are suitable for the following types of medium:
  Media in Group 1 and 2 with a vapor pressure greater than, or smaller and equal to 0.5 bar (7.3 psi)
- Devices not bearing this marking (without PED or PESR) are designed and manufactured according to sound engineering practice. They meet the requirements of
  a) Art. 4 Para. 3 of the Pressure Equipment Directive 2014/68/EU or
  b) Part 1, Para. 8 of Statutory Instruments 2016 No. 1105.
  The scope of application is indicated
  a) in diagrams 6 to 9 in Annex II of the Pressure Equipment Directive 2014/68/EU or
  b) Schedule 3, Para. 2 of Statutory Instruments 2016 No. 1105.

Measuring instrument approval

The measuring device is (optionally) approved as a cold water meter (MI-001) for volume measurement in service subject to legal metrological control in accordance with the European Measuring Instruments Directive 2014/32/EU (MID).

The measuring device is qualified according to OIML R49: 2013.

External standards and guidelines

- EN 60529
  Degrees of protection provided by enclosure (IP code)
- EN 61010-1
  Safety requirements for electrical equipment for measurement, control and laboratory use - general requirements
- IEC/EN 61326-2-3
  Emission in accordance with Class A requirements. Electromagnetic compatibility (EMC requirements).
- ANSI/ISA-61010-1 (82.02.01)
  Safety Requirements for Electrical Equipment for Measurement, Control and Laboratory Use - Part 1 General Requirements
- CAN/CSA-C22.2 No. 61010-1-12
  Safety Requirements for Electrical Equipment for Measurement, Control and Laboratory Use - Part 1 General Requirements
- ETSI EN 300 328
  Guidelines for 2.4 GHz radio components.
- EN 301489
  Electromagnetic compatibility and radio spectrum matters (ERM).

Ordering information

Detailed ordering information is available from the following sources:
- In the Product Configurator on the Endress+Hauser website: www.endress.com -> Click "Corporate" -> Select your country -> Click "Products" -> Select the product using the filters and search field -> Open product page -> The "Configure" button to the right of the product image opens the Product Configurator.
- From your Endress+Hauser Sales Center: www.addresses.endress.com

Product Configurator - the tool for individual product configuration
- Up-to-the-minute configuration data
- Depending on the device: direct input of information specific to the measuring point, such as the measuring range or operating language
- Automatic verification of exclusion criteria
- Automatic creation of the order code and its breakdown in PDF or Excel output format
- Ability to order directly in the Endress+Hauser Online Shop

Application packages

Many different application packages are available to enhance the functionality of the device. Such packages might be needed to address safety aspects or specific application requirements.

The application packages can be ordered with the device or subsequently from Endress+Hauser. Detailed information on the order code in question is available from your local Endress+Hauser sales center or on the product page of the Endress+Hauser website: www.endress.com.

Diagnostics functions

Order code for "Application package", option EM "Extended data logger"

Comprises extended functions concerning the event log and the activation of the measured value memory.

Event log:
Memory volume is extended from 10 000 message entries (standard version) to 50 000 entries.

For detailed information, see the Operating Instructions for the device.

Heartbeat Technology

Order code for "Application package", option EB "Heartbeat Verification + Monitoring"

Heartbeat Verification
Meets the requirement for traceable verification to DIN ISO 9001:2008 Chapter 7.6 a) "Control of monitoring and measuring equipment".
- Functional testing in the installed state.
- Traceable verification results on request, including a report.
- Simple testing process via local operation or other operating interfaces.
- Clear measuring point assessment (pass/fail) with high test coverage within the framework of manufacturer specifications.
- Extension of calibration intervals according to operator's risk assessment.

Heartbeat Monitoring
Continuously supplies data, which are characteristic of the measuring principle, to an external condition monitoring system for the purpose of preventive maintenance or process analysis. These data enable the operator to:
- Draw conclusions - using these data and other information - about the impact process influences (e.g. buildup, interference from the magnetic field) have on the measuring performance over time.
- Schedule servicing in time.
- Monitor the process or product quality .

For detailed information, see the Special Documentation for the device.

Accessories

Various accessories, which can be ordered with the device or subsequently from Endress+Hauser, are available for the device. Detailed information on the order code in question is available from your local Endress+Hauser sales center or on the product page of the Endress+Hauser website: www.endress.com.

Device-specific accessories

For the Proline 800 transmitter - Standard

Accessories	Description
Ground cable	Set, consisting of two ground cables for potential equalization.
Display guard	Is used to protect the display against impact or scoring, for example from sand in desert areas. Order number: 71504534
Weather protection cover	Is used to protect the measuring device from the effects of the weather: e.g. rainwater, excess heating from direct sunlight. Order number: 71343504 Installation Instructions EA01191D
Cable set, Modbus, 3x pulse, 5m/15ft	Order number: 71504535
Application package, Promag 800	Order number: DK5014
1x battery pack, lithium	Order number: DK5016-AA

For the Proline 800 - Advanced transmitter

Accessories	Description
Connecting cable for remote version	Coil current and electrode cables, various lengths, reinforced cables available on request.
Ground cable	Set, consisting of two ground cables for potential equalization.
Post mounting kit	Post mounting kit for transmitter.

Weather protection cover	Is used to protect the measuring device from the effects of the weather: e.g. rainwater, excess heating from direct sunlight. Order number: 71343504 Installation Instructions EA01191D
Application package, Promag 800	Order number: DK5014
1x battery pack, lithium	Order number: DK5016-CA
2x battery pack, lithium	Order number: DK5016-CB

For the sensor

Accessories	Description
Ground disks	Are used to ground the medium in lined measuring tubes to ensure proper measurement. For details, see Installation Instructions EA00070D

Service-specific accessories

Accessories	Description
Applicator	Software for selecting and sizing Endress+Hauser measuring devices: ▪ Choice of measuring devices for industrial requirements ▪ Calculation of all the necessary data for identifying the optimum flowmeter: e.g. nominal diameter, pressure loss, flow velocity and accuracy. ▪ Graphic illustration of the calculation results ▪ Determination of the partial order code, administration, documentation and access to all project-related data and parameters over the entire life cycle of a project. ▪ Calculation of the expected battery life. Applicator is available: ▪ Via the Internet: https://portal.endress.com/webapp/applicator ▪ As a downloadable DVD for local PC installation.
Netilion	IIoT ecosystem: Unlock knowledge Endress+Hauser 's Netilion IIoT ecosystem enables you to optimize your plant performance, digitize workflows, share knowledge and improve collaboration. Based on decades of experience in process automation, Endress+Hauser offers the process industry an IIoT ecosystem that enables you to gain useful insights from data. This knowledge can be used to optimize processes, leading to higher plant availability, efficiency and reliability, and ultimately to a more profitable plant. www.netilion.endress.com
Endress+Hauser SmartBlue app	If the device has an optional WLAN interface, it can be operated and configured with the SmartBlue App. *Supported functions* ▪ Access to the device (login) ▪ Configuration of the device ▪ Access to measured values, device status and diagnostic information SmartBlue is available as download for Android devices from the Google Play Store and for iOS devices from the iTunes Store: *Endress+Hauser SmartBlue* Directly to the app with the QR code: ANDROID APP ON Google Play Download on the App Store A0033202 **System requirements** ▪ iOS devices: iPhone 4S or higher from iOS9.0; iPad2 or higher from iOS9.0; iPod Touch 5th generation or higher from iOS9.0 ▪ Devices with Android: from Android 4.4 KitKat and Bluetooth® 4.0

Supplemental documentation

For an overview of the scope of the associated Technical Documentation, refer to the following:
- *Device Viewer* (www.endress.com/deviceviewer): Enter the serial number from the nameplate
- *Endress+Hauser Operations app*: Enter serial number from nameplate or scan matrix code on nameplate.

Standard documentation

Supplementary information on the semi-standard options is available in the relevant Special Documentation in the TSP database.

Brief Operating Instructions

Brief Operating Instructions for the sensor

Measuring device	Documentation code
Proline Promag W	KA01266D

Brief Operating Instructions for transmitter

Measuring device	Documentation code		
	-	Modbus RS485	Cellular radio
Proline 800	KA01496D	KA01494D	KA01495D

Operating Instructions

Measuring device	Documentation code		
	-	Modbus RS485	Cellular radio
Proline 800	BA02081D	BA02043D	BA02080D

Description of Device Parameters

Measuring device	Documentation code		
	-	Modbus RS485	Cellular radio
Proline 800	GP01155D	GP01153D	GP01154D

Supplementary device-dependent documentation

Special documentation

Content	Documentation code
Heartbeat Technology	SD02694D
Cellular Module	SD02562D
Display with Bluetooth interface	SD02655D
Using Open Source Software Licenses	SD02658D
Quick Reference Guide	SD02659D
OPC-UA	SD02663D
Information on Custody Transfer Measurement	SD02038D

Installation instructions

Contents	Note
Installation instructions for spare part sets and accessories	Documentation code: specified for each individual accessory → 🖹 85.

Registered trademarks

Modbus®
Registered trademark of SCHNEIDER AUTOMATION, INC.



www.addresses.endress.com

Endress+Hauser

People for Process Automation