TI01348T/09/EN/07.25-00
71718762
2025-08-31

Technical Information
iTHERM ModuLine TM412 Hygienic modular thermometer

Imperial RTD thermometer with or without thermowell for hygienic applications



Applications

- Specially designed for use in hygienic and aseptic applications in the Food & Beverages and Life Sciences industries
- Measuring range: −200 to +600 °C (−328 to +1 112 °F)
- Pressure range up to 40 bar (580 psi)
- Protection class: up to IP69K

Your benefits

- User-friendly and reliable from product selection to maintenance
- iTHERM inserts: globally unique, fully-automated production. Full traceability and consistently high product quality for reliable measured values
- iTHERM QuickSens: fastest response times (t_{90s}: 1.5 s) for optimum process control
- iTHERM StrongSens: exceptional vibration resistance (> 60g) for maximum plant safety
- iTHERM QuickNeck – cost and time savings thanks to simple, tool-free recalibration
- iTHERM TA30R: 316L terminal head for easier handling and lower installation and maintenance costs, and with highest IP69K rating
- International certification: explosion protection e.g. ATEX/IECEx/FM/CSA and in compliance with hygiene standards according to 3-A, EHEDG, ASME BPE, FDA, TSE Certificate of Suitability

Endress+Hauser
People for Process Automation

Table of contents

Function and system design 3
Notes on selecting the right device 3
Measuring principle 3
Measuring system 4
Modular design 5

Input 6
Measured variable 6
Measuring range 6

Output 6
Output signal 6
Family of temperature transmitters 6

Power supply 7
Wiring diagrams 7
Cable entries 9
Overvoltage protection 15

Performance characteristics 15
Reference operating conditions 15
Maximum measured error 16
Ambient temperature effect 16
Self-heating 16
Response time 17
Calibration 18
Insulation resistance 20

Installation 20
Orientation 20
Installation instructions 20

Environment 24
Ambient temperature range 24
Storage temperature 24
Humidity 24
Climate class 24
Degree of protection 24
Shock and vibration resistance 24
Electromagnetic compatibility (EMC) 24

Process 25
Process temperature range 25
Thermal shock 25
Process pressure range 25
State of aggregation of the medium 25

Mechanical construction 26
Design, dimensions 26
Weight 32
Material 32
Surface roughness 33
Terminal heads 33
Extension neck 37
Process connections 38
Shape of tip 42

Certificates and approvals 43
Hygiene standard 43
Materials in contact with food/product (FCM) 43
Material resistance 43
CRN approval 43
Surface purity 44
Thermowell testing and load capacity calculation 44

Ordering information 44

Accessories 45
Device-specific accessories 45
Service-specific accessories 45
System components 46

Documentation 46

Function and system design

Notes on selecting the right device

iTHERM ModuLine, hygienic

This device is part of the product line of modular thermometers for hygienic and aseptic applications.

Differentiating factors when selecting a suitable thermometer

iTHERM ModuLine TM4x**1**	iTHERM ModuLine TM4x**2**
Metric version	Imperial version

TM4**1**x characterizes the device that uses cutting-edge technology, with features such as a replaceable insert, quick-fastening extension neck (iTHERM QuickNeck), vibration-resistant and fast-response sensor technology iTHERM StrongSens and QuickSens) and approval for use in hazardous areas

iTHERM ModuLine TM411

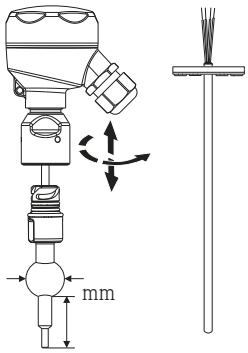

iTHERM ModuLine TM412

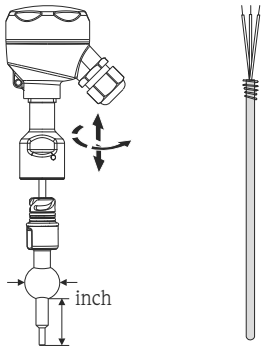

TM4**0**x characterizes the device that uses basic technology, with features such as a fixed, non-replaceable insert, application in non-hazardous areas, standard extension neck, low-cost unit

iTHERM ModuLine TM401

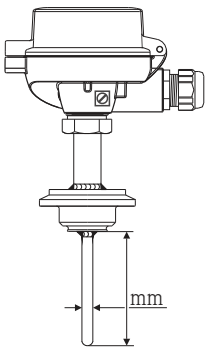

iTHERM ModuLine TM402

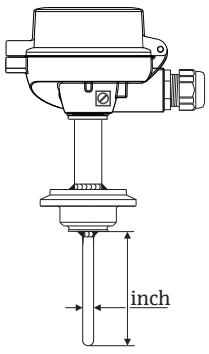

Measuring principle

RTD assembly

These RTD assemblies use a Pt100 temperature sensor according to IEC 60751. The temperature sensor is a temperature-sensitive platinum resistor with a resistance of 100 Ω at 0 °C (32 °F) and a temperature coefficient α = 0.003851 °C^{-1}.

There are generally two different kinds of platinum RTD assemblies:

- **Wire wound (WW):** Here, a double coil of fine, high-purity platinum wire is located in a ceramic support. This is then sealed top and bottom with a ceramic protective layer. Such RTD assemblies not only facilitate very reproducible measurements but also offer good long-term stability of the resistance/temperature characteristic within temperature ranges up to 600 °C (1 112 °F). This type of sensor is relatively large in size and it is comparatively sensitive to vibrations.
- **Thin-film platinum resistance thermometers (TF):** A very thin, ultrapure platinum layer, approx. 1 µm thick, is vaporized in a vacuum on a ceramic substrate and then structured photolithographically. The platinum conductor paths formed in this way create the measuring resistance. Additional covering and passivation layers are applied and reliably protect the thin platinum layer from contamination and oxidation, even at high temperatures.

The primary advantages of thin film temperature sensors over wire wound versions are their smaller sizes and better vibration resistance. A relatively low principle-based deviation of the resistance/temperature characteristic from the standard characteristic of IEC 60751 can frequently be observed among TF sensors at high temperatures. As a result, the tight limit values of tolerance class A as per IEC 60751 can only be observed with TF sensors at temperatures up to approx. 300 °C (572 °F).

Measuring system

The manufacturer provides a complete portfolio of optimized components for the temperature measuring point – everything you need for the seamless integration of the measuring point into the overall facility. In the case of iTHERM hygienic thermometers, this includes:

- Process indicator
- Data Manager

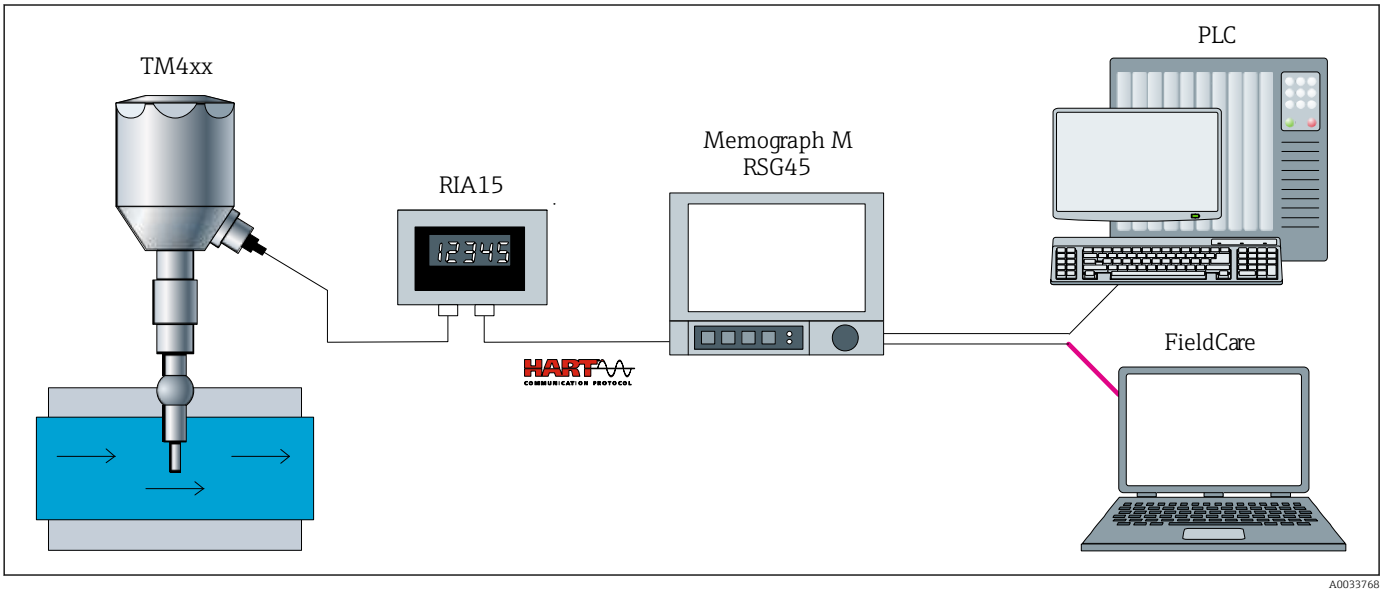

1 Example of application, measuring point layout with additional Endress+Hauser components

- Installed iTHERM thermometer with HART® head transmitter
- Process indicators from the RIA product family:
  - Display of 4 to 20 mA measured values or HART® process variables
  - 2-wire device
  - Voltage drop ≤1 V (HART® ≤1.9 V)
- Data Manager of the RSG product family:
  - Tamper-proof data storage and access (FDA 21 CFR 11)
  - HART® gateway functionality; up to 40 HART® devices connected at a time
  - Communication capabilities: Modbus, Profibus DP, PROFINET, EtherNet/IP
- PLC/FieldCare: Field Data Manager Software MS20 – Automatic service for report generation, printing reports, read out of data, storing of data, secure export, PDF generation. Read out measured data via online interface or from mass storage. Online visualization of instantaneous values ("live data").

Modular design

Design		Options
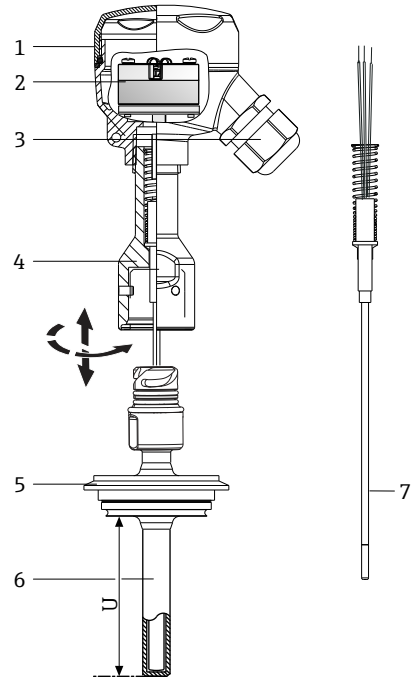 A0034469	1: Terminal head, housing	▪ 316L, high or low head, optionally with display window ▪ Aluminum, high or low head, with or without display window ▪ Polypropylene, low head ▪ Polyamide, high head, without display window ▪ Field transmitter with display, as option **Your benefits at a glance:** ▪ Optimum terminal access thanks to low housing edge of bottom section: ▪ Easier to use ▪ Lower installation and maintenance costs ▪ Optional display: local process display unit for added reliability ▪ IP69K protection: optimum protection even with high-pressure cleaning
	2: Wiring, electrical connection, output signal	▪ Ceramic terminal block ▪ Flying leads ▪ Head transmitter (4 to 20 mA, HART®, PROFIBUS® PA, FOUNDATION™ Fieldbus, IO-Link®), single-channel or two-channel ▪ Attachable display (optional) ▪ Field transmitter (HART®), two-channel input
	3: Plug or cable gland	▪ PROFIBUS® PA / FOUNDATION™ Fieldbus plug, 4-pin ▪ 8-pin plug ▪ Polyamide cable glands
	4: Extension neck	▪ Quick-fastening iTHERM QuickNeck ▪ Standard NPT ½" nipple ▪ Hygienic nipple-union-nipple NPT ½" ▪ UNEF thread 1-¼" x 18, for mounting in existing thermowell **Your benefits at a glance:** ▪ **iTHERM QuickNeck** - tool-free removal of the insert: ▪ Saves time/costs on frequently calibrated measuring points ▪ Wiring mistakes avoided ▪ IP69K protection: safety under extreme process conditions ▪ Hygienic nipple-union-nipple (NUN): ▪ slim, hygienic design ▪ allows for removal of insert without unwiring device
	5: Process connection	Wide range of different versions.
	6: Thermowell	▪ Various diameters ▪ Various tip shapes (straight or reduced)
	7: Insert	Spring loaded sensor models: wire wound (WW) or thin-film sensor (TF). **Your benefits at a glance:** ▪ **iTHERM QuickSens** - insert with the world's fastest response time: ▪ Insert: Ø 3 mm (0.12 in) or Ø 6 mm (0.24 in) ▪ Fast, highly accurate measurements, delivering maximum process safety and control ▪ Quality and cost optimization ▪ Minimization of necessary immersion length: better product protection thanks to improved process flow ▪ **iTHERM StrongSens** - insert with unbeatable durability: ▪ Vibration resistance > 60g: lower life cycle costs thanks to longer operating life and high plant availability ▪ Automated, traceable production: top quality and maximum process safety ▪ High long-term stability: reliable measured values and high level of system safety Spring load of the insert = ½"

Input

Measured variable

Temperature (temperature-linear transmission behavior)

Measuring range

Depends on the type of sensor used

Sensor type [1]	Measuring range
Pt100 (WW)	−200 to +600 °C (−328 to +1 112 °F)
Pt100 (TF) Basic	−50 to +200 °C (−58 to +392 °F)
Pt100 (TF) Standard	−50 to +400 °C (−58 to +752 °F)
Pt100 (TF) iTHERM QuickSens	−50 to +200 °C (−58 to +392 °F)
Pt100 (TF) iTHERM StrongSens	−50 to +500 °C (−58 to +932 °F)
Thermocouple TC, type J	−40 to +750 °C (−40 to +1 382 °F)
Thermocouple TC, type K	−40 to +1 100 °C (−40 to +2 012 °F)
Thermocouple TC, type N	

1) Options depend on product and configuration

Output

Output signal

Generally, the measured value can be transmitted in one of two ways:

- Directly-wired sensors - sensor measured values forwarded without a transmitter.
- Via all common protocols by selecting an appropriate Endress+Hauser iTEMP temperature transmitter. All the transmitters listed below are mounted directly in the terminal head or as field transmitter and wired with the sensory mechanism.

Family of temperature transmitters

Thermometers fitted with iTEMP transmitters are an installation-ready complete solution to improve temperature measurement by significantly increasing measurement accuracy and reliability, when compared to direct wired sensors, as well as reducing both wiring and maintenance costs.

4 to 20 mA head transmitters
They offer a high degree of flexibility, thereby supporting universal application with low inventory storage. The iTEMP transmitters can be configured quickly and easily at a PC. Endress+Hauser offers free configuration software which can be downloaded from the Endress+Hauser Website.

HART® head transmitters
The iTEMP transmitter is a 2-wire device with one or two measuring inputs and one analog output. The device not only transfers converted signals from resistance thermometers and thermocouples, it also transfers resistance and voltage signals using HART® communication. Swift and easy operation, visualization and maintenance using universal configuration software like FieldCare, DeviceCare or FieldCommunicator 375/475. Integrated Bluetooth® interface for the wireless display of measured values and configuration via Endress +Hauser SmartBlue (app), optional.

PROFIBUS® PA head transmitters
Universally programmable iTEMP transmitter with PROFIBUS® PA communication. Conversion of various input signals into digital output signals. High measurement accuracy over the complete ambient temperature range. PROFIBUS PA functions and device-specific parameters are configured via fieldbus communication.

FOUNDATION Fieldbus™ head transmitter
Universally programmable iTEMP transmitter with FOUNDATION Fieldbus™ communication. Conversion of various input signals into digital output signals. High measurement accuracy over the complete ambient temperature range. All iTEMP are approved for use in all the main process control systems. The integration tests are performed in Endress+Hauser's 'System World'.

Head transmitter with PROFINET® and Ethernet-APL™
The iTEMP transmitter is a 2-wire device with two measuring inputs. The device not only transfers converted signals from resistance thermometers and thermocouples, it also transfers resistance and voltage signals using the PROFINET® protocol. Power is supplied via the 2-wire Ethernet connection according to IEEE 802.3cg 10Base-T1. The iTEMP can be installed as an intrinsically safe electrical apparatus in Zone 1 hazardous areas. The device can be used for instrumentation purposes in the terminal head form B (flat face) according to DIN EN 50446.

Head transmitter with IO-Link®
The iTEMP transmitter is an IO-Link® device with a measurement input and an IO-Link® interface. It offers a configurable, simple and cost-effective solution thanks to digital communication via IO-Link®. The device is mounted in a terminal head form B (flat face) as per DIN EN 5044.

Advantages of the iTEMP transmitters:
- Double or single sensor input (optionally for certain transmitters)
- Attachable display (optionally for certain transmitters)
- Unsurpassed reliability, accuracy and long-term stability in critical processes
- Mathematical functions
- Monitoring of the thermometer drift, sensor backup functionality, sensor diagnostic functions
- Sensor-transmitter-matching based on the Callendar van Dusen coefficients (CvD).

Power supply

Wiring diagrams

According to the 3-A Sanitary Standard and the EHEDG, electrical connecting cables must be smooth, corrosion-resistant and easy to clean.

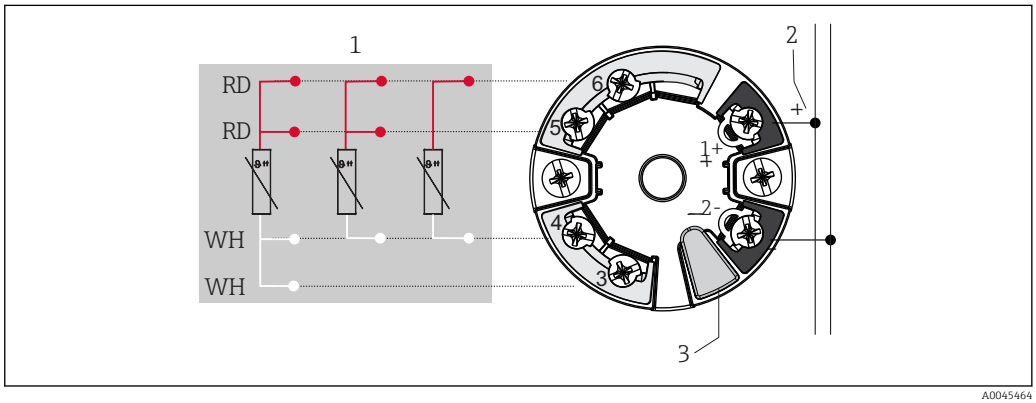

2 *Head-mounted iTEMP TMT7x transmitter or iTEMP TMT31 (single sensor input)*

1 *Sensor input, RTD, 4-, 3- and 2-wire*
2 *Power supply/bus connection*
3 *Display connection/CDI interface*

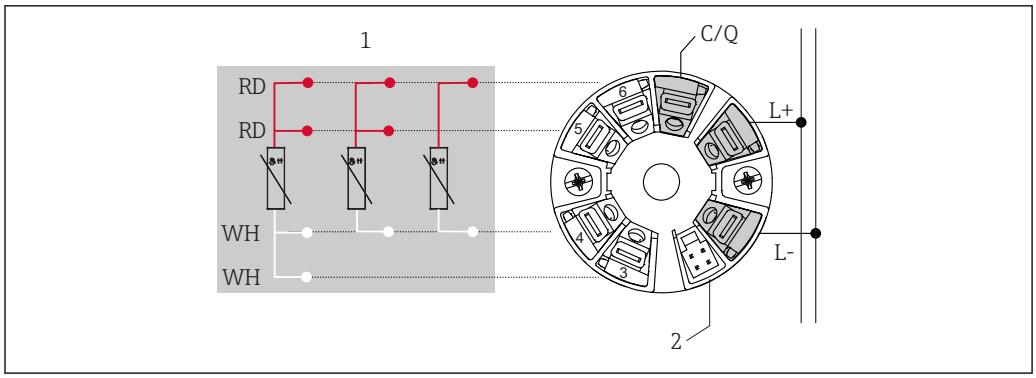

3 Head-mounted iTEMP TMT36 transmitter (single sensor input)

1 RTD sensor input: 4-, 3- and 2-wire
2 Display connection
L+ 18 to 30 V_{DC} power supply
L- 0 V_{DC} power supply
C/Q IO-Link or switch output

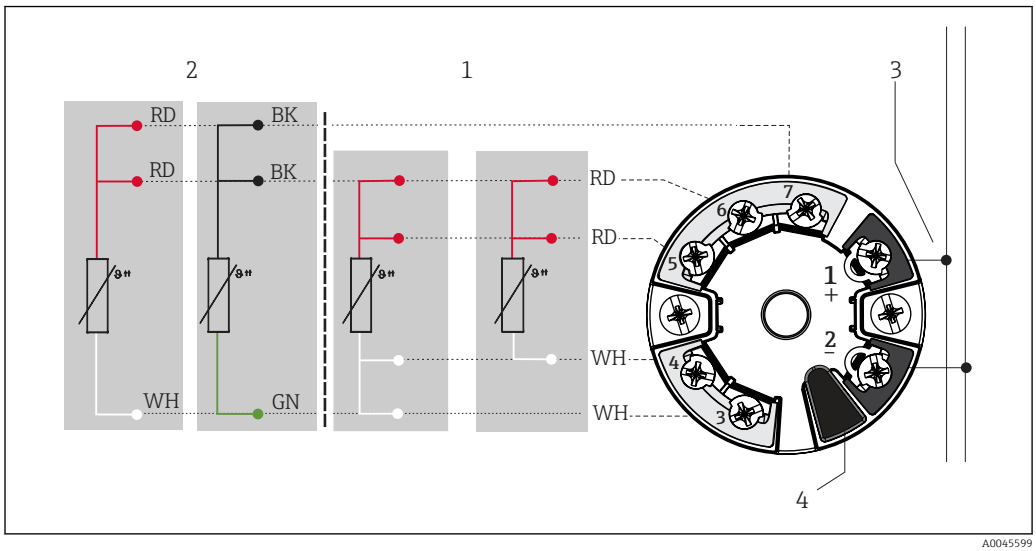

4 Head mounted transmitter TMT8x (dual input).

1 Sensor input 1, RTD, 4- and 3-wire
2 Sensor input 2, RTD, 3-wire
3 Bus connection and supply voltage
4 Display connection

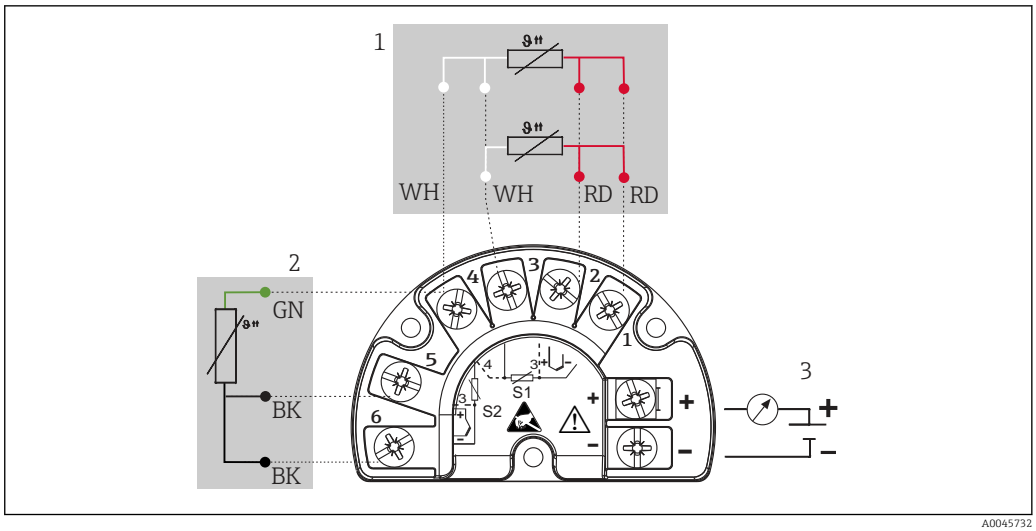

5 *Field mounted transmitter TMT162 (dual input)*

1 *Sensor 1*
2 *Sensor 2 (not TMT142B)*
3 *Power supply field transmitter and analog output 4 to 20 mA or bus connection*

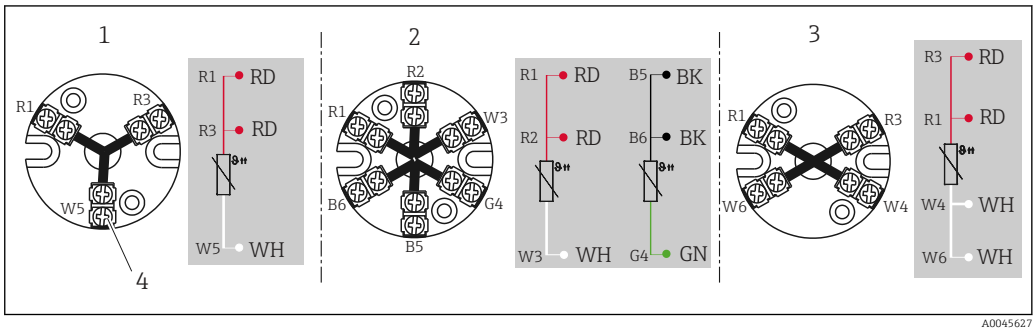

6 *Terminal block mounted*

1 *3-wire single*
2 *2 x 3-wire single*
3 *4-wire single*
4 *Outside screw*

Cable entries

The cable entries must be selected during configuration of the device. Different terminal heads offer different options in terms of the thread and number of available cable entries.

Device plugs

The manufacturer offers a wide variety of device plugs for the simple and fast integration of the thermometer into a process control system. The following tables show the PIN assignments of the various plug connector combinations.

The manufacturer advises against connecting thermocouples directly to connectors. The direct connection to the pins of the plug might generate a new "thermocouple" which influences the accuracy of the measurement. The thermocouples are connected in combination with a iTEMP transmitter.

Abbreviations

#1	Order: first transmitter/insert	#2	Order: second transmitter/insert
i	Insulated. Wires marked 'i' are not connected and are insulated with heat shrink tubes.	YE	Yellow
GND	Grounded. Wires marked 'GND' are connected to the internal grounding screw in the terminal head.	RD	Red
BN	Brown	WH	White

GNYE	Green-yellow	PK	Pink
BU	Blue	GN	Green
GY	Gray	BK	Black

Terminal head with a cable entry [1)]

Plug	**1x PROFIBUS® PA**								**1x FOUNDATION™ Fieldbus (FF)**				**1x PROFINET® and Ethernet-APL™**			
Plug thread	M12				7/8"				7/8"				M12			
PIN number	1	2	3	4	1	2	3	4	1	2	3	4	1	2	3	4
Electrical connection (terminal head)																
Flying leads and TC	Not connected (not insulated)															
3-wire terminal block (1x Pt100)	RD	RD	WH		RD	RD	WH		RD	RD	WH		Cannot be combined		Cannot be combined	
4-wire terminal block (1x Pt100)			WH	WH			WH	WH			WH	WH			Cannot be combined	
6-wire terminal block (2x Pt100)	RD (#1) [2)]	RD (#1)	WH (#1)		RD (#1)	RD (#1)	WH (#1)		RD (#1)	RD (#1)	WH (#1)					
1x TMT 4 to 20 mA or HART®	+	i	-	i	+	i	-	i	+	i	-	i	Cannot be combined			
2x TMT 4 to 20 mA or HART® in the terminal head with a high cover	+(#1)	+(#2)	-(#1)	-(#2)	+(#1)	+(#2)	-(#1)	-(#2)	+(#1)	+(#2)	-(#1)	-(#2)				
1x TMT PROFIBUS® PA	+	i	-	GND [3)]	+	i	-	GND [3)]	Cannot be combined							
2x TMT PROFIBUS® PA	+(#1)		-(#1)		+		-									
1x TMT FF	Cannot be combined				Cannot be combined				-	+	GND	i	Cannot be combined			
2x TMT FF									-(#1)	+(#1)						
1x TMT PROFINET®									Cannot be combined				Ethernet-APL signal -	Ethernet-APL signal +	GND	-
2x TMT PROFINET®													Ethernet-APL signal - (#1)	Ethernet-APL signal + (#1)		
PIN position and color code	 1 BN 2 GNYE 3 BU 4 GY A0018929				 1 BN 2 GNYE 3 BU 4 GY A0018930				 1 BU 2 BN 3 GY 4 GNYE A0018931				 1 RD 2 GN A0052119			

1) Options depend on product and configuration
2) Second Pt100 is not connected
3) If a head is used without grounding screw, e.g. plastic housing TA30S or TA30P, insulated 'i' instead of grounded GND

Terminal head with a cable entry [1)]

Plug	4-pin/8-pin							
Plug thread	M12							
PIN number	1	2	3	4	5	6	7	8
Electrical connection (terminal head)								
Flying leads and TC	Not connected (not insulated)							
3-wire terminal block (1x Pt100)	RD	RD	WH		i			
4-wire terminal block (1x Pt100)			WH	WH				
6-wire terminal block (2x Pt100)			WH		BK	BK	YE	
1x TMT 4 to 20 mA or HART®	+(#1)	i	-(#1)	i	i			
2x TMT 4 to 20 mA or HART® in the terminal head with a high cover					+(#2)	i	-(#2)	i
1x TMT PROFIBUS® PA	Cannot be combined							
2x TMT PROFIBUS® PA								
1x TMT FF	Cannot be combined							
2x TMT FF								
1x TMT PROFINET®	Cannot be combined							
2x TMT PROFINET®	Cannot be combined							
PIN position and color code	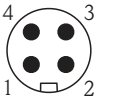 1 BN 2 GNYE 3 BU 4 GY A0018929				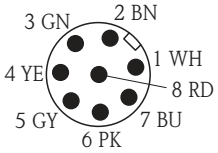 A0018927			

1) Options depend on product and configuration

Terminal head with one cable entry

Plug	1x IO-Link®, 4-pin			
Plug thread	M12			
PIN number	1	2	3	4
Electrical connection (terminal head)				
Flying leads	Not connected (not insulated)			
3-wire terminal block (1x Pt100)	RD	i	RD	WH
4-wire terminal block (1x Pt100)	Cannot be combined			
6-wire terminal block (2x Pt100)				
1x TMT 4 to 20 mA or HART®	Cannot be combined			
2x TMT 4 to 20 mA or HART® in the terminal head with a high cover				
1x TMT PROFIBUS® PA	Cannot be combined			
2x TMT PROFIBUS® PA				
1x TMT FF	Cannot be combined			
2x TMT FF				
1x TMT PROFINET®	Cannot be combined			
2x TMT PROFINET®				
1x TMT IO-Link®	L+	-	L-	C/Q

Plug	1x IO-Link®, 4-pin			
2x TMT IO-Link®	L+ (#1)	-	L- (#1)	C/Q
PIN position and color code	 1 BN 3 BU 4 BK A0055383			

Terminal head with two cable entries [1)]

Plug	2x PROFIBUS® PA								2x FOUNDATION™ Fieldbus (FF)				2x PROFINET® and Ethernet-APL™			
Plug thread  A0021706	M12(#1) / M12(#2)				7/8"(#1)/7/8"(#2)				7/8"(#1)/7/8"(#2)				M12 (#1)/M12 (#2)			
PIN number	1	2	3	4	1	2	3	4	1	2	3	4	1	2	3	4
Electrical connection (terminal head)																
Flying leads and TC	Not connected (not insulated)															
3-wire terminal block (1x Pt100)	RD/i	RD/i	WH/i		RD/i	RD/i	WH/i		RD/i	RD/i	WH/i		Cannot be combined		WH/i	
4-wire terminal block (1x Pt100)			WH/i	WH/i			WH/i	WH/i			WH/i	WH/i				
6-wire terminal block (2x Pt100)	RD/BK	RD/BK	WH/YE		RD/BK	RD/BK	WH/YE		RD/BK	RD/BK	WH/YE					
1x TMT 4 to 20 mA or HART®	+/i	i/i	-/i	i/i	+/i	i/i	-/i	i/i	+/i	i/i	-/i	i/i	+/i	i/i	-/i	i/i
2x TMT 4 to 20 mA or HART® in the terminal head with a high cover	+ (#1)/ + (#2)		- (#1)/ -(#2)		+ (#1)/ + (#2)		- (#1)/ -(#2)		+ (#1)/ + (#2)		- (#1)/ -(#2)		+ (#1)/ +(#2)		- (#1)/ -(#2)	
1x TMT PROFIBUS® PA	+/i		-/i	GND/ GND	+/i		-/i	GND/ GND	Cannot be combined							
2x TMT PROFIBUS® PA	+ (#1)/ + (#2)		- (#1)/ -(#2)		+ (#1)/ + (#2)		- (#1)/ -(#2)									
1x TMT FF	Cannot be combined				Cannot be combined				-/i	+/i	i/i	GND/ GND	Cannot be combined			
2x TMT FF									- (#1)/ -(#2)	+ (#1)/ + (#2)						
1x TMT PROFINET®	Cannot be combined				Cannot be combined				Cannot be combined				Ethernet-APL signal -	Ethernet-APL signal +	GND	i

Plug	2x PROFIBUS® PA		2x FOUNDATION™ Fieldbus (FF)	2x PROFINET® and Ethernet-APL™			
2x TMT PROFINET®	Cannot be combined	Cannot be combined	Cannot be combined	Ethernet-APL signal - (#1) and (#2)	Ethernet-APL signal + (#1) and (#2)		
PIN position and color code	 1 BN 2 GNYE 3 BU 4 GY A0018929	 1 BN 2 GNYE 3 BU 4 GY A0018930	 1 BU 2 BN 3 GY 4 GNYE A0018931	 1 RD 2 GN A0052119			

1) Options depend on product and configuration

Terminal head with two cable entries [1)]

Plug	4-pin/8-pin							
Plug thread  A0021706	M12 (#1)/M12 (#2)							
PIN number	1	2	3	4	5	6	7	8

Electrical connection (terminal head)					
Flying leads and TC	Not connected (not insulated)				
3-wire terminal block (1x Pt100)	RD/i	RD/i	WH/i		i/i
4-wire terminal block (1x Pt100)			WH/i	WH/i	
6-wire terminal block (2x Pt100)	RD/BK	RD/BK	WH/YE		
1x TMT 4 to 20 mA or HART®	+/i	i/i	-/i	i/i	
2x TMT 4 to 20 mA or HART® in the terminal head with a high cover	+(#1)/ +(#2)		-(#1)/-(#2)		
1x TMT PROFIBUS® PA	Cannot be combined				
2x TMT PROFIBUS® PA					
1x TMT FF	Cannot be combined				
2x TMT FF					
1x TMT PROFINET®	Cannot be combined				
2x TMT PROFINET®	Cannot be combined				
PIN position and color code	 1 BN 2 GNYE 3 BU 4 GY A0018929				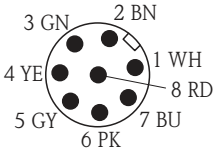 A0018927

1) Options depend on product and configuration

Terminal head with two cable entries

Plug	2x IO-Link®, 4-pin			
Plug thread	M12(#1)/M12 (#2)			
PIN number	1	2	3	4
Electrical connection (terminal head)				
Flying leads	Not connected (not insulated)			
3-wire terminal block (1x Pt100)	RD	i	RD	WH
4-wire terminal block (1x Pt100)	Cannot be combined			
6-wire terminal block (2x Pt100)	RD/BK	i	RD/BK	WH/YE
1x TMT 4 to 20 mA or HART®	Cannot be combined			
2x TMT 4 to 20 mA or HART® in the terminal head with a high cover				
1x TMT PROFIBUS® PA	Cannot be combined			
2x TMT PROFIBUS® PA				
1x TMT FF	Cannot be combined			
2x TMT FF				
1x TMT PROFINET®	Cannot be combined			
2x TMT PROFINET®				
1x TMT IO-Link®	L+	-	L-	C/Q
2x TMT IO-Link®	L+ (#1) and (#2)	-	L- (#1) and (#2)	C/Q
PIN position and color code	 1 BN 3 BU 4 BK A0055383			

Connection combination: insert - transmitter [1)]

Insert	Transmitter connection [2)]			
	iTEMP TMT31/iTEMP TMT7x		iTEMP TMT8x	
	1x 1-channel	2x 1-channel	1x 2-channel	2x 2-channel
1x sensor (Pt100 or TC), flying leads	Sensor (#1) : transmitter (#1)	Sensor (#1) : transmitter (#1) (Transmitter (#2) not connected)	Sensor (#1) : transmitter (#1)	Sensor (#1) : transmitter (#1) Transmitter (#2) not connected
2x sensor (2x Pt100 or 2x TC), flying leads	Sensor (#1) : transmitter (#1) Sensor (#2) insulated	Sensor (#1) : transmitter (#1) Sensor (#2): transmitter (#2)	Sensor (#1) : transmitter (#1) Sensor (#2): transmitter (#1)	Sensor (#1) : transmitter (#1) Sensor (#2): transmitter (#1) (Transmitter (#2) not connected)
1x sensor (Pt100 or TC),with terminal block [3)]	Sensor (#1) : transmitter in cover	Cannot be combined	Sensor (#1) : transmitter in cover	Cannot be combined

Insert	Transmitter connection [2]			
	iTEMP TMT31/iTEMP TMT7x		iTEMP TMT8x	
	1x 1-channel	2x 1-channel	1x 2-channel	2x 2-channel
2x sensor (2x Pt100 or 2x TC) with terminal block	Sensor (#1) : transmitter in cover Sensor (#2) not connected		Sensor (#1) : transmitter in cover Sensor (#2): transmitter in cover	
2x sensors (2x Pt100 or 2x TC) in conjunction with feature 600, option MG [4]	Cannot be combined	Sensor (#1) : transmitter (#1) Sensor (#2): transmitter (#2)	Cannot be combined	Sensor (#1): transmitter (#1) - channel 1 Sensor (#2): transmitter (#2) - channel 1

1) Options depend on product and configuration
2) If 2 transmitters are selected in a terminal head, transmitter (#1) is installed directly on the insert. Transmitter (#2) is installed in the high cover. A TAG cannot be ordered for the second transmitter as standard. The bus address is set to the default value and, if necessary, must be changed manually before commissioning.
3) Only in the terminal head with a high cover, only 1 transmitter possible. A ceramic terminal block is automatically fitted on the insert.
4) Individual sensors each connected to channel 1 of a transmitter

Overvoltage protection

To protect against overvoltage in the power supply and signal/communication cables for the thermometer electronics, the manufacturer offers the HAW562 surge arrester for DIN rail mounting and the HAW569 for field housing installation.

For more information, see the Technical Information for the respective devices.

Performance characteristics

Reference operating conditions

This data is relevant for determining the measurement accuracy of the iTEMP transmitters used. See technical documentation of the specific iTEMP transmitter.

Maximum measured error **RTD resistance thermometer as per IEC 60751:**

Class	max. Tolerances (°C)	Characteristics
RTD maximum error type TF		
Cl. A	± (0.15 + 0.002 · |t| [1])	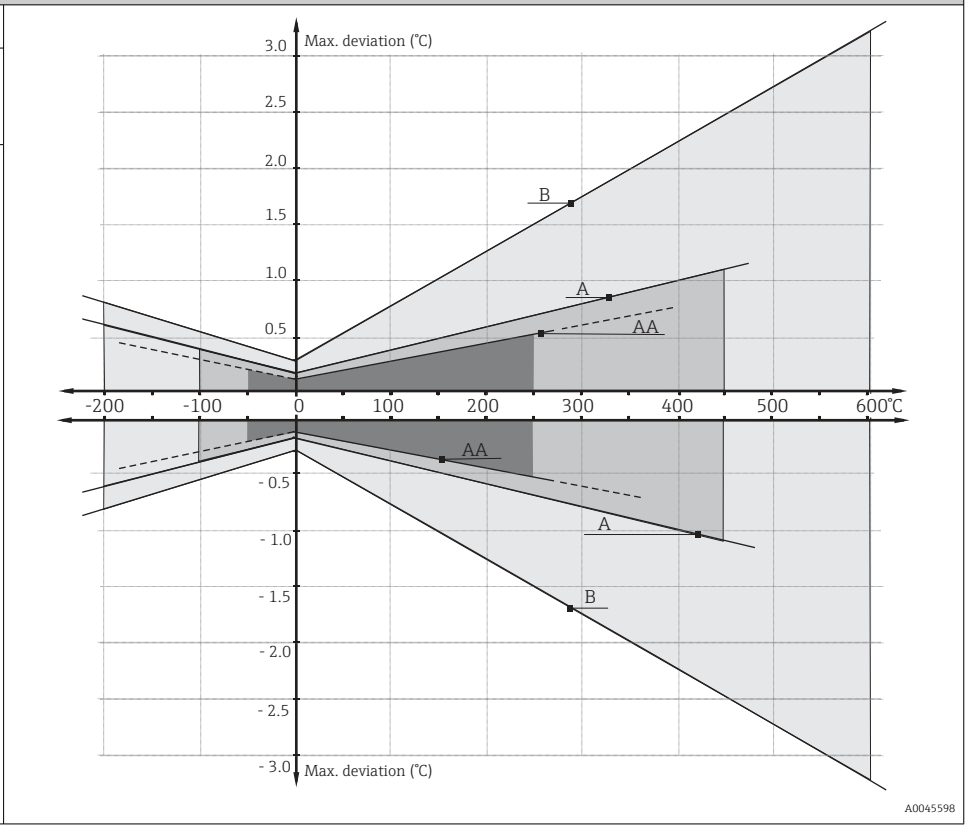
Cl. AA, former 1/3 Cl. B	± (0.1 + 0.0017 · |t|) [1]	
Cl. B	± (0.3 + 0.005 · |t| [1])	

1) |t| = absolute value °C

For measurement errors in °F, calculate using equations in °C, then multiply the outcome by 1.8.

Temperature ranges

Sensor type [1]	Operating temperature range	Class B	Class A	Class AA
Pt100 (TF) Basic	−50 to +200 °C (−58 to +392 °F)	−50 to +200 °C (−58 to +392 °F)	−30 to +200 °C (−22 to +392 °F)	-
Pt100 (TF) Standard	−50 to +400 °C (−58 to +752 °F)	−50 to +400 °C (−58 to +752 °F)	−30 to +250 °C (−22 to +482 °F)	0 to +150 °C (32 to 302 °F)
Pt100 (TF) iTHERM QuickSens	−50 to +200 °C (−58 to +392 °F)	−50 to +200 °C (−58 to +392 °F)	−30 to +200 °C (−22 to +392 °F)	0 to +150 °C (32 to 302 °F)
Pt100 (TF) iTHERM StrongSens	−50 to +500 °C (−58 to +932 °F)	−50 to +500 °C (−58 to +932 °F)	−30 to +300 °C (−22 to +572 °F)	0 to +150 °C (+32 to +302 °F)
Pt100 (WW)	−200 to +600 °C (−328 to +1 112 °F)	−200 to +600 °C (−328 to +1 112 °F)	−100 to +450 °C (−148 to +842 °F)	−50 to +250 °C (−58 to +482 °F)

1) Selection depending on product and configuration

Ambient temperature effect Depends on the head transmitter used. For details, see the Technical Information.

Self-heating RTD elements are passive resistors that are measured using an external current. This measurement current causes a self-heating effect in the RTD element itself which in turn creates an additional

measurement error. In addition to the measurement current, the size of the measurement error is also affected by the temperature conductivity and flow velocity of the process. This self-heating error is negligible when an Endress+Hauser iTEMP temperature transmitter (very small measurement current) is connected.

Response time

Tests in water at 0.4 m/s (1.3 ft/s), according to IEC 60751; 10 K temperature step change.

Response time without heat transfer paste [1)]

Thermowell	Shape of tip	Insert	1x Pt100 iTHERM QuickSens, TF		1x Pt100 iTHERM StrongSens, TF		1x Pt100 wire wound WW		2x Pt100 wire wound WW		1x Pt100 standard thin-film TF		2x Pt100 standard thin-film TF	
			t_{50}	t_{90}	t_{50}	t_{90}	t_{50}	t_{90}	t_{50}	t_{90}	t_{50}	t_{90}	t_{50}	t_{90}
Ø6.35 mm (¼ in)	Reduced 4.76 mm (3/16 in) x 19.05 mm (0.75 in)	Ø3 mm (0.12 in)	1.6 s	5.9 s	-	-	7.8 s	21.8 s	7.8 s	21.8 s	-	-	-	-
Ø9.53 mm (⅜ in)	Straight	Ø6 mm (0.24 in)	8.5 s	47 s	25.9 s	80.9 s	-	-	-	-	-	-	-	-
	Straight	Ø6.35 mm (¼ in)	-	-	-	-	23.6 s	67 s	21.8 s	65.2 s	18.4 s	55.8 s	18.4 s	55.8 s
	Reduced 4.76 mm (3/16 in) x 19.05 mm (0.75 in)	Ø3 mm (0.12 in)	1.5 s	5.5 s	-	-	8.4 s	23 s	8.4 s	23 s	-	-	-	-
Ø12.7 mm (½ in)	Straight	Ø6 mm (0.24 in)	8.2 s	34.8 s	23.4 s	70.6 s	-	-	-	-	-	-	-	-
	Straight	Ø6.35 mm (¼ in)	-	-	-	-	20.1 s	55.4 s	21.3 s	61.8 s	17.9 s	51.5 s	17.9 s	51.5 s
	Reduced 4.76 mm (3/16 in) x 19.05 mm (0.75 in)	Ø3 mm (0.12 in)	1.8 s	6.2 s	-	-	8.8 s	24.1 s	8.8 s	24.1 s	-	-	-	-

1) If using a thermowell.

Response time for directly wired insert without transmitter.

Calibration

Calibration of thermometers

Calibration involves comparing the measured values of a device under test (DUT) with those of a more precise calibration standard using a defined and reproducible measurement method. The aim is to determine the deviation of the DUT's measured values from the true value of the measured variable. Two different methods are used for thermometers:

- Calibration at fixed-point temperatures, e.g. at the freezing point of water at 0 °C,
- Calibration compared against a precise reference thermometer.

The thermometer to be calibrated must display the fixed point temperature or the temperature of the reference thermometer as accurately as possible. Temperature-controlled calibration baths with very homogeneous thermal values, or special calibration furnaces into which the DUT and the reference thermometer, where necessary, can project to a sufficient degree, are typically used for thermometer calibrations.

The measurement uncertainty can increase due to heat dissipation errors and short immersion lengths. The existing measurement uncertainty is listed on the individual calibration certificate.

For accredited calibrations according to ISO17025, the measurement uncertainty shouldn't be twice as high as the accredited measurement uncertainty. If this is exceeded, only a factory calibration can be performed.

Sensor transmitter matching

The resistance/temperature curve of platinum resistance thermometers is standardized but in practice it is rarely possible to keep to the values precisely over the entire operating temperature range. For this reason, platinum resistance sensors are divided into tolerance classes, such as Class A, AA or B as per IEC 60751. These tolerance classes describe the maximum permissible deviation of the specific sensor characteristic curve from the standard curve, i.e. the maximum temperature-dependent characteristic error that is permitted. The conversion of measured sensor resistance values to temperatures in temperature transmitters or other meter electronics is often susceptible to considerable errors as the conversion is generally based on the standard characteristic curve.

When using Endress+Hauser temperature transmitters, this conversion error can be reduced significantly by sensor-transmitter matching

- Calibration at three temperatures at least and determination of the actual temperature sensor characteristic curve,
- Adjustment of the sensor-specific polynomial function using Calendar-van Dusen (CvD) coefficients,
- Configuration of the temperature transmitter with the sensor-specific CvD coefficients for resistance/temperature conversion, and
- another calibration of the reconfigured temperature transmitter with connected resistance thermometer.

Endress+Hauser offers this kind of sensor-transmitter matching as a separate service. Furthermore, the sensor-specific polynomial coefficients of platinum resistance thermometers are always provided on every Endress+Hauser calibration certificate where possible, e.g. at least three calibration points, so that users themselves can also appropriately configure suitable temperature transmitters.

For the device, Endress+Hauser offers standard calibrations at a reference temperature of −20 to +500 °C (−4 to +932 °F) based on the ITS90 (International Temperature Scale). Calibrations in other temperature ranges are available from your Endress+Hauser sales center on request. Calibrations are traceable to national and international standards. The calibration certificate is referenced to the serial number of the device. Only the insert is calibrated.

Minimum insertion length (IL) for inserts required to perform a correct calibration

Due to restrictions of the bath geometries, minimum insertion lengths must be maintained at high temperatures in order to be able to perform a calibration with acceptable measurement uncertainty. The same applies when a temperature head transmitter is used. Due to the heat dissipation, minimum insertion lengths must be maintained in order to ensure the functionality of the transmitter −40 to +85 °C (−40 to +185 °F).

Minimum insertion length (IL):

Calibration temperature	Minimum insertion length (IL)
−196 °C (−320.8 °F)	120 mm (4.72 in) [1]
−80 to +250 °C (−112 to +482 °F)	No minimum insertion length needed [2]

Calibration temperature	Minimum insertion length (IL)
251 to 550 °C (483 to 1 022 °F)	300 mm (11.8 in)
551 to 600 °C (1 023 to 1 112 °F)	400 mm (15.8 in)

1) Min. 150 mm (5.91)required with iTEMP head transmitters
2) At a temperature of −80 to +250 °C (−112 to +482 °F) and with iTEMP head transmitters, min. 50 mm (1.97 in) is required

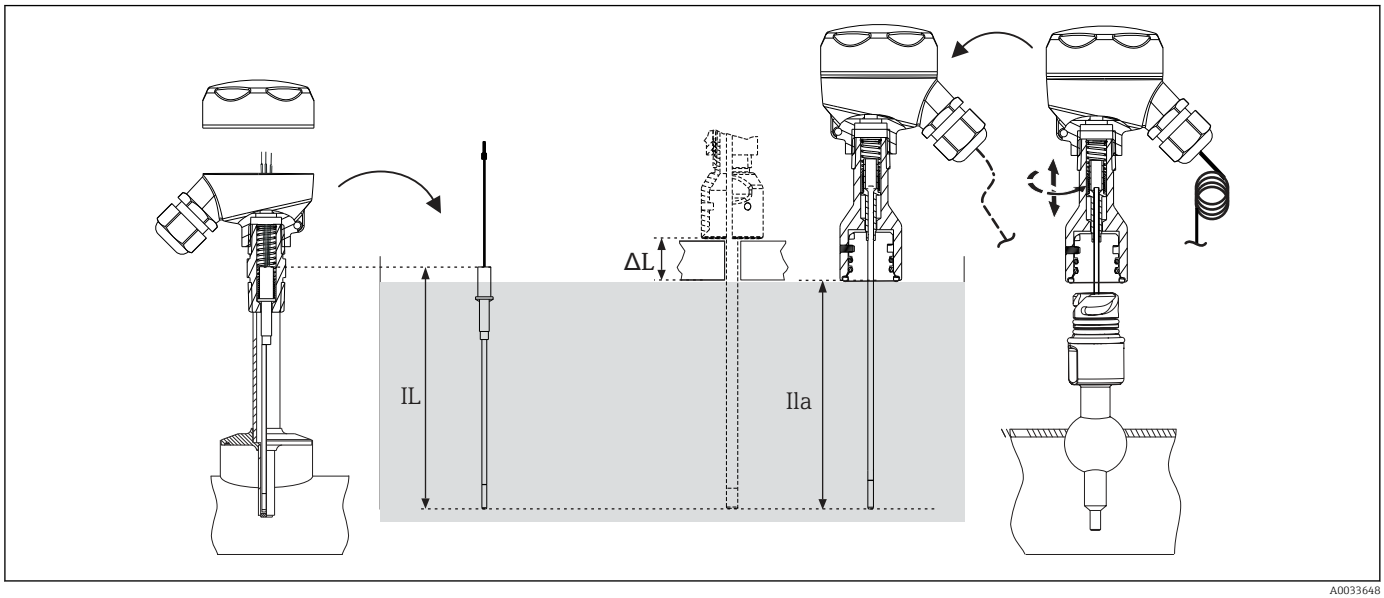

7 *Insertion lengths for sensor calibration*

IL Insertion length for factory calibration or recalibration onsite without the iTHERM QuickNeck extension neck
ILa Insertion length for recalibration onsite with the iTHERM QuickNeck extension neck
ΔL Additional length, depending on the calibration unit, if the insert cannot be fully immersed

- To check the actual accuracy rating of the thermometers installed, a cyclic calibration of the installed sensor needs to be performed frequently. The insert is normally removed for comparison with a precise reference thermometer in the calibration bath (see graphic, left part).
  A reproducible calibration requires the insert to have a minimum insertion length IL. If the insert is shorter than this minimum length, this reproducibility cannot be guaranteed.
- The iTHERM QuickNeck enables quick, tool-free removal of the insert for calibration purposes. The entire upper part of the thermometer is released by turning the terminal head. The insert is removed from the thermowell and directly immersed into the calibration bath (see graphic, right part). Make sure that the cable is long enough to be able to reach the mobile calibration bath with the cable connected. If this is not possible for the calibration, it is advisable to use a connector.

Advantages of iTHERM QuickNeck:
- Considerable time savings when recalibrating the device (up to 20 minutes per measuring point)
- Wiring mistakes avoided when re-installing
- Minimum plant downtime, thereby saving costs

The minimum immersion length is the length of the insert that is fully immersed in the calibration bath. For a valid recalibration, the value selected for the length ILa must be at least the value of the previously defined minimum insertion lengths (IL) of the specific types of insert. For more detailed values, see the previous tables, values without head transmitter.
If the calibration unit used does not allow the insert to be fully immersed as far as the bottom edge of the top part of the iTHERM QuickNeck, it might be necessary to add an additional length (ΔL) to ILa. → 18

Formulas for calculating the ILa when recalibrating onsite with iTHERM QuickNeck [1)]

Thermowell version	Formula
Thermowell diameter Ø6.35 mm (¼ in)	ILa = U + T + 38.1 mm (1.5 in)
Thermowell diameter Ø9.53 mm (⅜ in)	
Thermowell diameter Ø12.7 mm (½ in)	

1) Spring load of the insert ½ in

Insulation resistance

Insulation resistance ≥ 100 MΩ at ambient temperature, measured between the terminals and the outer jacket with a minimum voltage of 100 V_{DC}.

Installation

Orientation

No restrictions. However, self-draining in the process must be guaranteed. If there is an opening to detect leaks at the process connection, this opening must be at the lowest possible point.

Installation instructions

The immersion length of the thermometer can influence the measurement accuracy. If the immersion length is too small, then measurement errors are caused by heat conduction via the process connection and the container wall. Therefore, if installing in a pipe, the immersion length should ideally correspond to half of the pipe diameter.

- Installation options: Pipes, tanks or other plant components
- To minimize the heat conduction error, a minimum immersion length is recommended depending on the type of sensor used and the design of the insert. This immersion depth corresponds to the minimum insertion length for the calibration. → 18
- ATEX certification: Observe the installation instructions in the Ex documentation!

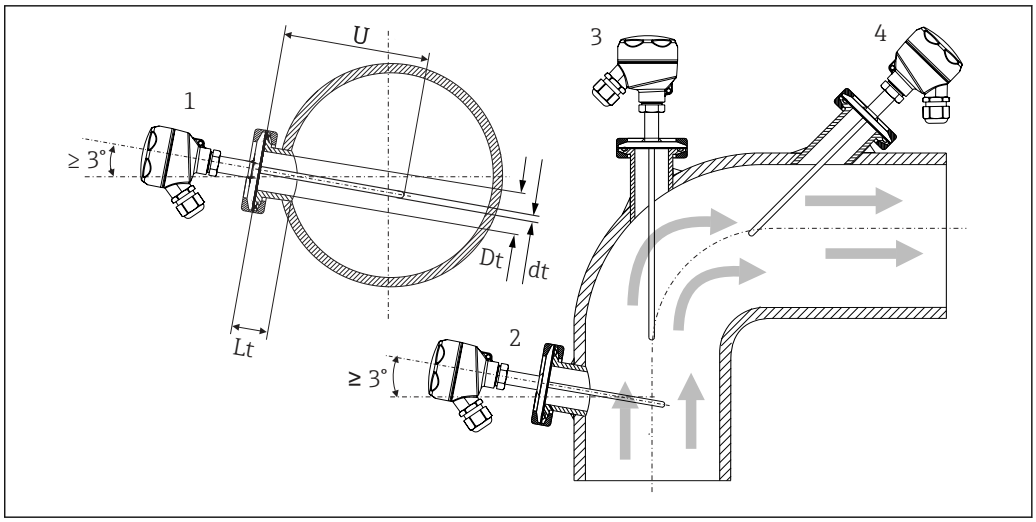

8 *Installation examples*

1, 2 Perpendicular to the flow direction, installed at a min. angle of 3° to ensure self-draining
3 On elbows
4 Inclined installation in pipes with a small nominal diameter
U Immersion length

The requirements of the EHEDG and the 3-A Sanitary Standard must be adhered to.

Installation instructions EHEDG/cleanability: Lt ≤ (Dt-dt)

Installation instructions 3-A/cleanability: Lt ≤ 2 (Dt-dt)

In the case of pipes with a small nominal diameter, it is advisable for the tip of the thermometer to project well into the process so that it extends past the pipe axis. Installation at an angle (4) could be another solution. When determining the immersion length or installation depth, all the parameters of the thermometer and of the medium to be measured must be taken into account (e.g. flow velocity, process pressure).

Pay attention to the exact position of the sensor element in the thermometer tip.

Available options depend on product and configuration.

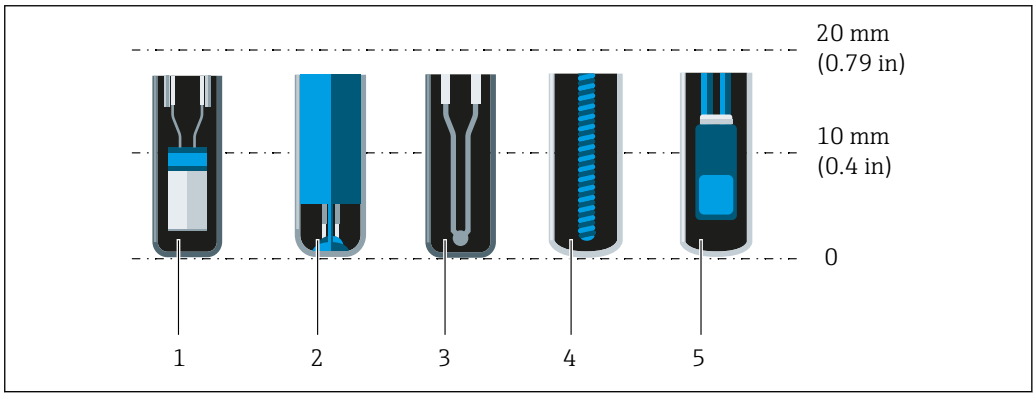

1 StrongSens or TrustSens for 5 to 7 mm (0.2 to 0.28 in)
2 QuickSens for 0.5 to 1.5 mm (0.02 to 0.06 in)
3 Thermocouple (not grounded) for 3 to 5 mm (0.12 to 0.2 in)
4 Wire wound sensor for 5 to 20 mm (0.2 to 0.79 in)
5 Standard thin-film sensor for 5 to 10 mm (0.2 to 0.39 in)

To keep the influence of heat dissipation to a minimum and to achieve the best possible measurement results, 20 to 25 mm (0.79 to 0.98 in) should be in contact with the medium in addition to the actual sensor element.

This results in the following recommended minimum immersion lengths
- TrustSens or StrongSens 30 mm (1.18 in)
- QuickSens 25 mm (0.98 in)
- Wire wound sensor 45 mm (1.77 in)
- Standard thin-film sensor 35 mm (1.38 in)

It is particularly important to take this into consideration for T-pieces, as the immersion length is very short on account of their design, and the measurement error is higher as a result. It is therefore recommended to use elbow pieces with QuickSens sensors.

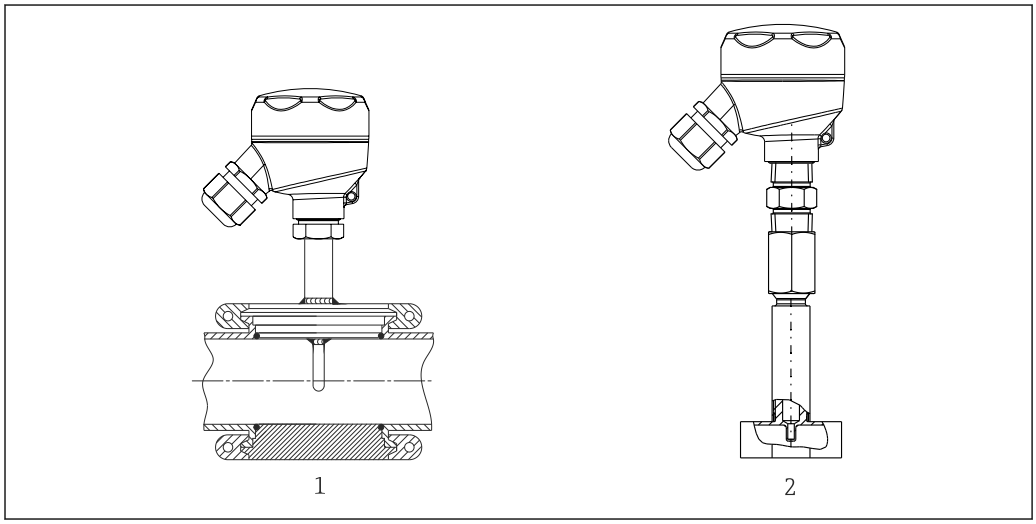

9 Process connections for thermometer installation in pipes with small nominal diameters

1 Varivent® process connection type N for DN40
2 Tee or elbow thermowell (illustrated) for weld-in as per DIN 11865/ASME BPE

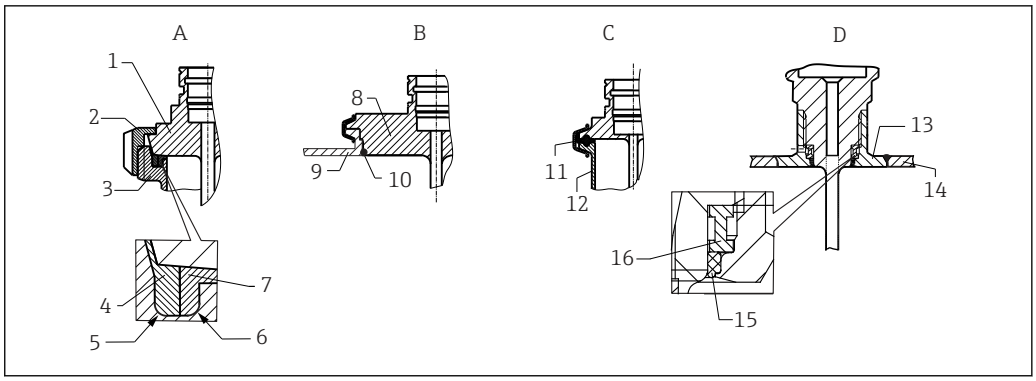

10 Detailed installation instructions for hygiene-compliant installation

A Milk pipe connection according to DIN 11851, only in connection with EHEDG certified and self-centering sealing ring
1 Sensor with milk pipe connection
2 Groove slip-on nut
3 Counterpart connection
4 Centering ring
5 R0.4
6 R0.4
7 Sealing ring
B Varivent® process connection for VARINLINE® housing
8 Sensor with Varivent connection
9 Counterpart connection
10 O-ring
C Clamp according to ISO 2852
11 Molded seal
12 Counterpart connection
D Process connection Liquiphant M G1", horizontal installation
13 Weld-in adapter
14 Vessel wall
15 O-ring
16 Thrust collar

NOTICE

The following actions must be taken if a sealing ring (O-ring) or seal fails:

- The thermometer must be removed.
- The thread and the O-ring joint/sealing surface must be cleaned.
- The sealing ring or seal must be replaced.
- CIP must be performed after installation.

In the case of weld-in connections, exercise the necessary degree of care when performing the welding work on the process side:

1. Use suitable welding material.
2. Flush-weld or weld with welding radius ≥ 3.2 mm (0.13 in).
3. Avoid crevices, folds or gaps.
4. Ensure the surface is honed and polished, Ra ≤ 0.76 µm (30 µin).

Pay attention to the following when installing the thermometer to ensure that the cleanability is not affected:

1. The installed sensor is suitable for CIP (cleaning in place). Cleaning is carried out in combination with piping or tank. In the case of internal tank fixtures using process connection nozzles, it is important to ensure that the cleaning assembly directly sprays this area so that it is cleaned properly.
2. The Varivent® connections enable flush-mounted installation.

Environment

Ambient temperature range

Terminal head [1]	Temperature in °C (°F)
Without head transmitter installed	Depends on the terminal head used and the cable gland or fieldbus connector, see 'Terminal heads' section.
With mounted head transmitter	−40 to 85 °C (−40 to 185 °F) SIL mode (HART 7 transmitter): −40 to 70 °C (−40 to 158 °F)
With mounted head transmitter and display	−30 to +85 °C (−22 to +185 °F)
With mounted field transmitter	▪ Without display: −40 to 85 °C (−40 to 185 °F) ▪ With display: −40 to +80 °C (−40 to +176 °F) ▪ SIL mode: −40 to +75 °C (−40 to +167 °F)

1) Depends on product and configuration.

Extension neck	Temperature in °C (°F)
iTHERM QuickNeck	−50 to +140 °C (−58 to +284 °F)

Storage temperature

−40 to 85 °C (−40 to 185 °F).

Humidity

Depending on the transmitter used. If Endress+Hauser iTEMP head transmitters are used:
- Condensation permitted as per IEC 60 068-2-33.
- Maximum relative humidity: 95% as per IEC 60068-2-30.

Climate class

As per EN 60654-1, Class C.

Degree of protection

Max. IP69K, depending on the design (terminal head, connector, etc.).

Shock and vibration resistance

The Endress+Hauser inserts exceed the requirements of IEC 60751 with regard to shock and vibration resistance of 3g in a range of 10 to 500 Hz. The vibration resistance of the measuring point depends on sensor type and design:

Sensor type [1]	Vibration resistance for the sensor tip
Pt100 (WW)	≤ 30 m/s² (≤ 3g)
Pt100 (TF) Basic	
Pt100 (TF) Standard	≤ 40 m/s² (≤ 4g)
Pt100 (TF) iTHERM StrongSens	600 m/s² (60g)
Pt100 (TF) iTHERM QuickSens, version: ø6 mm (0.24 in)	600 m/s² (60g)
Pt100 (TF) iTHERM QuickSens, version: ø3 mm (0.12 in)	≤ 30 m/s² (≤ 3g)
Thermocouple TC, type J, K, N	≤ 30 m/s² (≤ 3g)

1) Options depend on product and configuration

Electromagnetic compatibility (EMC)

Depends on the iTEMP head transmitter used. See the technical documentation of the specific device.

Process

Process temperature range

Depends on the type of sensor used, maximum −200 to +600 °C (−328 to +1 112 °F).

Thermal shock

Thermal shock resistance in CIP/SIP process with a temperature increase from +5 to +130 °C (+41 to +266 °F) within 2 seconds.

Process pressure range

The maximum possible process pressure depends on various influencing factors, such as the design, process connection and process temperature. For information on the maximum possible process pressures for the individual process connections, see the 'Process connection' section. → 38

It is possible to check the mechanical loading capacity as a function of the installation and process conditions online in the Thermowell (TW) Sizing Module for thermowells in the Endress+Hauser Applicator software. See 'Accessories' section.

Example of the permitted flow velocity depending on the immersion length and process medium

The maximum allowable flow velocity to which the thermometer can be exposed decreases as the immersion depth of the insert in the flowing medium increases. In addition, it is dependent on the diameter of the thermometer tip, the medium type, the process temperature and the process pressure. The following figures exemplify the maximum permitted flow velocities in water and superheated steam at a process pressure of 40 bar (580 PSI).

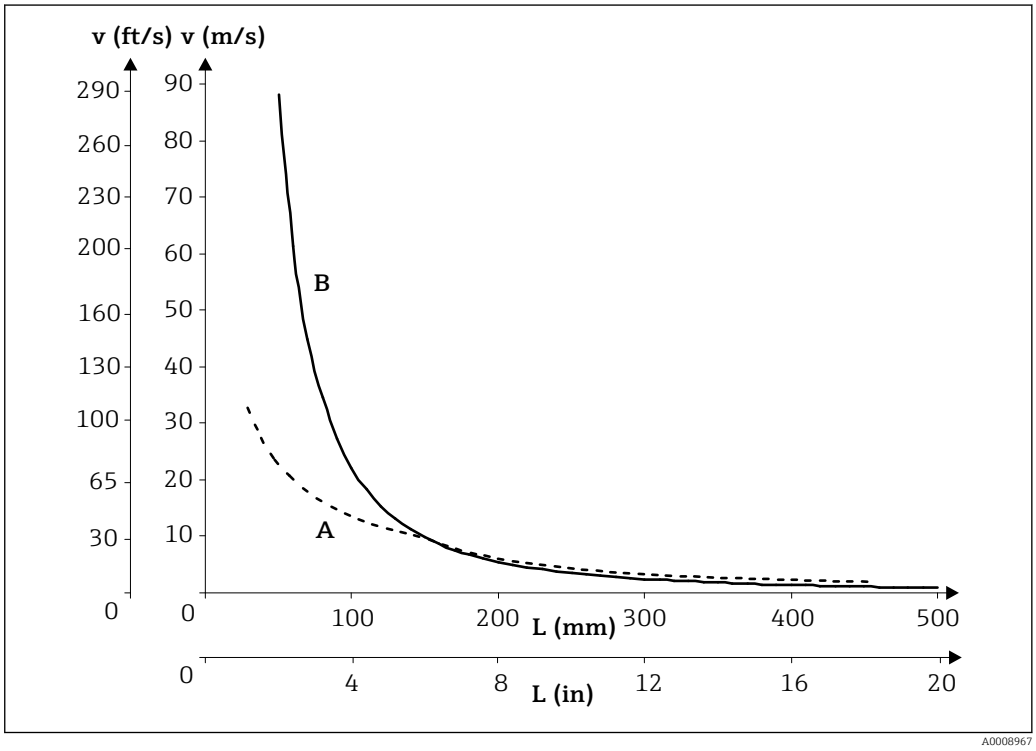

11 *Permitted flow velocities, thermowell diameter 9.53 mm (3/8 in)*

A Medium water at T = 50 °C (122 °F)
B Medium superheated steam at T = 400 °C (752 °F)
L Immersion length exposed to flow
v Flow velocity

State of aggregation of the medium

Gaseous or liquid (also with high viscosity, e.g. yogurt).

Mechanical construction

Design, dimensions

All dimensions in mm (in). The design of the thermometer depends on the thermowell version used:
- Thermometer without thermowell - for installation in an existing thermowell
- Diameter 6.35 mm (¼ in)
- Diameter 9.53 mm (⅜ in)
- Diameter 12.7 mm (½ in)
- Tee and elbow thermowell version as per DIN 11865/ASME BPE for weld-in

Various dimensions, such as the immersion length U for instance, are variable values and are therefore indicated as items in the following dimensional drawings.

Variable dimensions:

Item	Description
E	Extension neck length, variable depending on the configuration or pre-defined for the version with iTHERM QuickNeck
ILa	Insertion length
L	Thermowell length (U+T)
B	Thermowell base thickness: predefined, depends on thermowell version (see also the individual table data)
T	Length of lagging: variable or pre-defined, depends on thermowell version (see also the individual table data)
U	Immersion length: variable, depending on the configuration
ØID	Insert diameter 6 mm (0.24 in), 3 mm (0.12 in) or 6.35 mm (¼ in)

Without thermowell

For installation in an existing thermowell (all dimensions in inch)

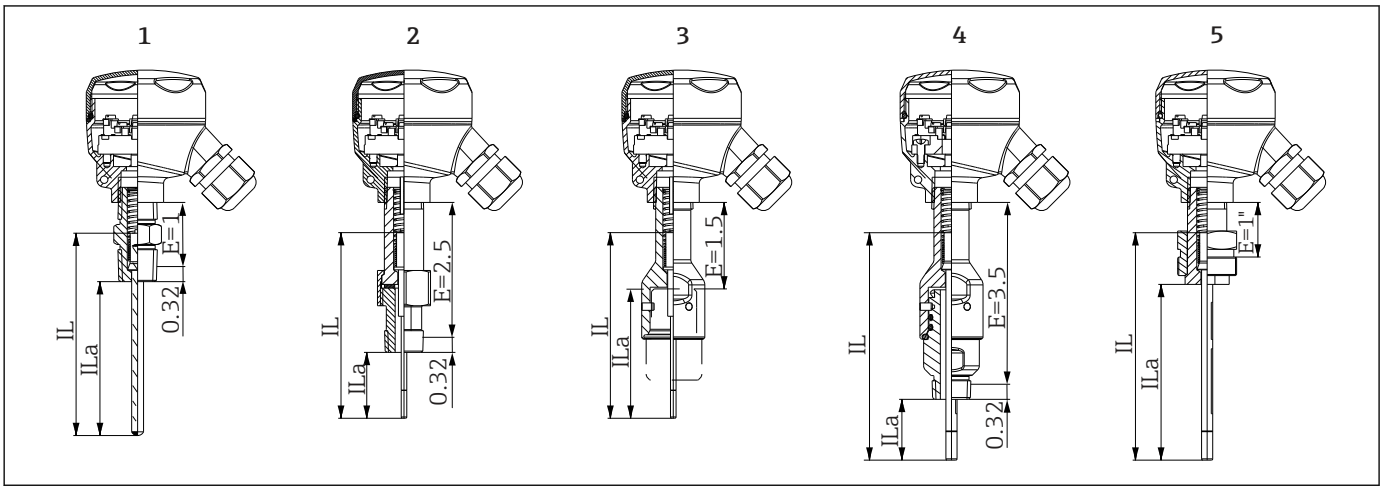

1 Thermometer with extension hex nipple, for connection thread ½" NPT
2 Thermometer with extension nipple-union-nipple (NUN), for connection thread ½" NPT
3 Thermometer with quick-fastening iTHERM QuickNeck, upper part
4 Thermometer with quick-fastening iTHERM QuickNeck complete, for connection thread ½" NPT
5 Thermometer with 1¼" x 18 UNEF thread
IL Insert length
ILa Insertion length (insert length below nipple)
E Length of the extension neck available at point of installation (provided one is available)

The spring travel of the insert is ½".

Pay attention to the following equations when calculating the insert length ILa for immersion into a thermowell TT412 already available:

Versions 1, 2, 3, 4 and 5	ILa = U + T +38.1 mm (1.5 in) [1]

1) ILa = Insertion length (insert length below nipple); U = Thermowell immersion length; T = Thermowell lagging length

Pay attention to the following equations when calculating for a replaceable insert:

Versions 1, 2, 3, 4 and 5	IL = U + T + E +38.1 mm (1.5 in) [1]

1) IL = Insert length; U = Thermowell immersion length; T = Thermowell lagging length; E = Length of the extension neck

The iTHERM TS212 insert is available as a spare part. The insert length (IL) depends on the immersion length of the thermowell (U), the length of the extension neck (E) and the length of the thermowell lagging (T). The insertion length (IL) must be taken into consideration when replacing the unit.

This can be calculated by means of the following formula: IL = U + T + E + 38.1 mm (1.5 in)

With thermowell (1/4", 3/8", 1/2")

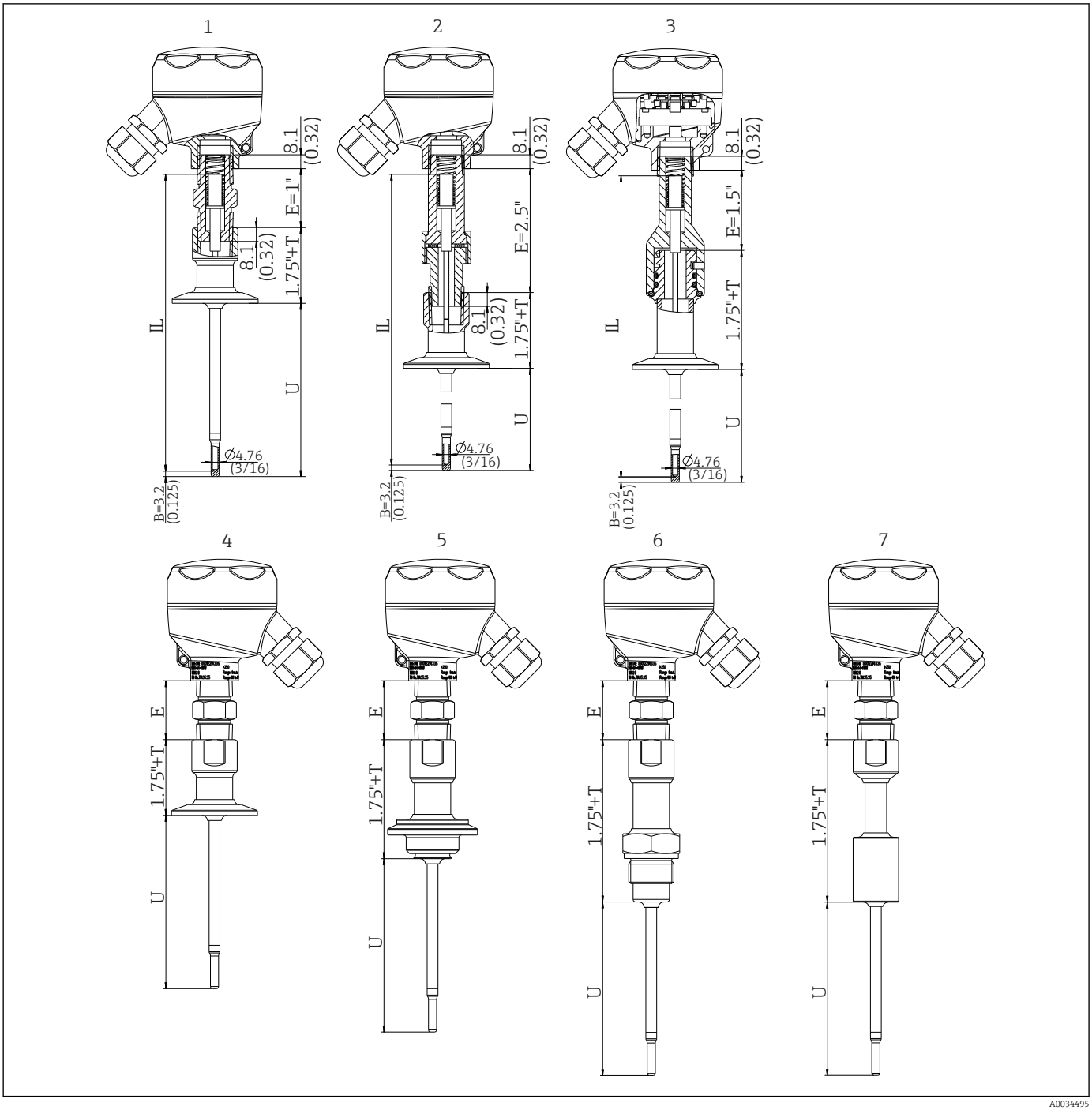

12 Thermowell with neck connection NPT ½" and various process connection versions:

1 Thermometer with extension hex nipple and Tri-clamp process connection
2 Thermometer with extension nipple-union-nipple (NUN) and Tri-clamp process connection
3 Thermometer with quick-fastening iTHERM QuickNeck and Tri-clamp process connection
4 Thermometer with extension hex nipple and Tri-clamp process connection
5 Thermometer with extension hex nipple and Varivent® process connection
6 Thermometer with extension hex nipple and Liquiphant adapter
7 Thermometer with cylindrical weld-in adapter
IL Insert length
U Thermowell immersion length

E Length of the extension neck available at point of installation (provided one is available)
T Thermowell lagging length
B Base thickness

Not available for diameter ½": Tri-clamp 3/4"

Item	Version	Length
Length of thermowell lagging T [1]	Versions 1, 2, 4: Tri-clamp with NPT Version 3: Tri-clamp with iTherm QuickNeck Version 5: Varivent® with NPT Version 5: Varivent® with iTherm QuickNeck Version 6: Thread ISO 228 for Liquiphant, with NPT Version 6: Thread ISO 228 for Liquiphant, with iTherm QuickNeck Version 7: Cylindrical weld-in with NPT Version 7: Cylindrical weld-in with iTherm QuickNeck	0-6" 1-6" 1-6" 1.5-6" 2-6" 2-6" 2-6" 2-6"
Immersion length U	Independent of the version	Variable, depending on the configuration
Base thickness B	**6.35 mm (¼ in) Thermowell:** Reduced tip Ø4.76 mm (3/16 in)	3.2 mm (0.125 in)
	9.53 mm (⅜ in) Thermowell: Reduced tip Ø4.76 mm (3/16 in) Straight tip	3.2 mm (0.125 in) 3 mm (0.12 in)
	12.7 mm (½ in) Thermowell: Reduced tip Ø4.76 mm (3/16 in) Straight tip	3.2 mm (0.125 in) 6.3 mm (0.25 in)
Extension neck length E	**Version 1:** Thermometer with extension hex nipple and Tri-clamp process connection	E = 25.4 mm (1 in)
	Version 2: Thermometer with extension nipple-union-nipple (NUN) and Tri-clamp process connection	E = 63.5 mm (2.5 in)
	Version 3: Thermometer with quick-fastening iTHERM QuickNeck and Tri-clamp process connection	E = 38.1 mm (1.5 in)

1) Depends on the process connection

Tee or elbow thermowell, optimized

No welds, no dead legs

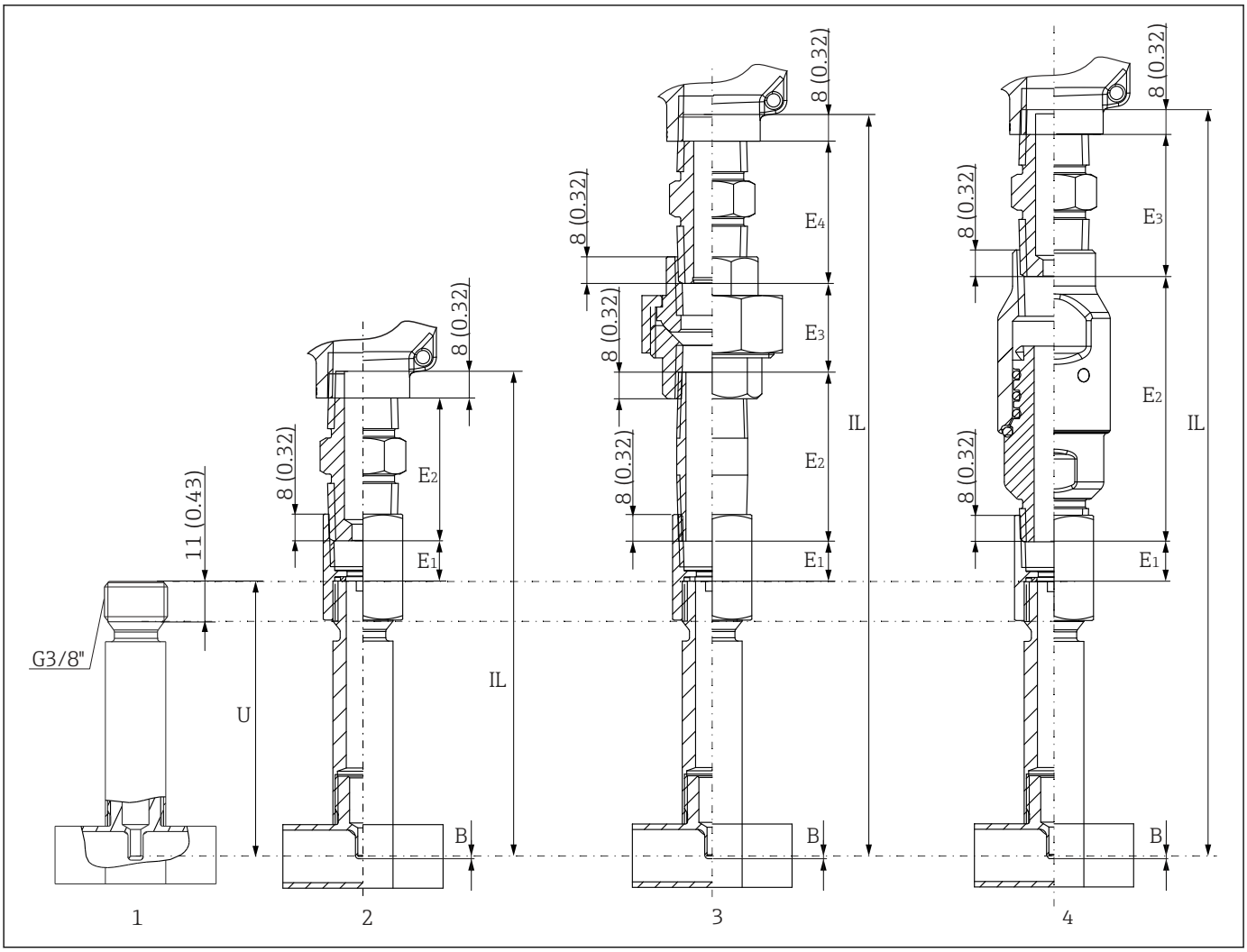

13 Tee thermowell as per DIN 11865 or ASME BPE

1 *With extension neck connection G3/8"*
2 *With extension hex nipple and connection thread ½" NPT, 5 Nm (3.69 lbf ft)*
3 *With extension nipple-union-nipple (NUN) and connection thread ½" NPT, 5 Nm (3.69 lbf ft)*
4 *With quick-fastening iTHERM QuickNeck, torque 5 Nm (3.69 lbf ft), and glued with threadlocking adhesive*

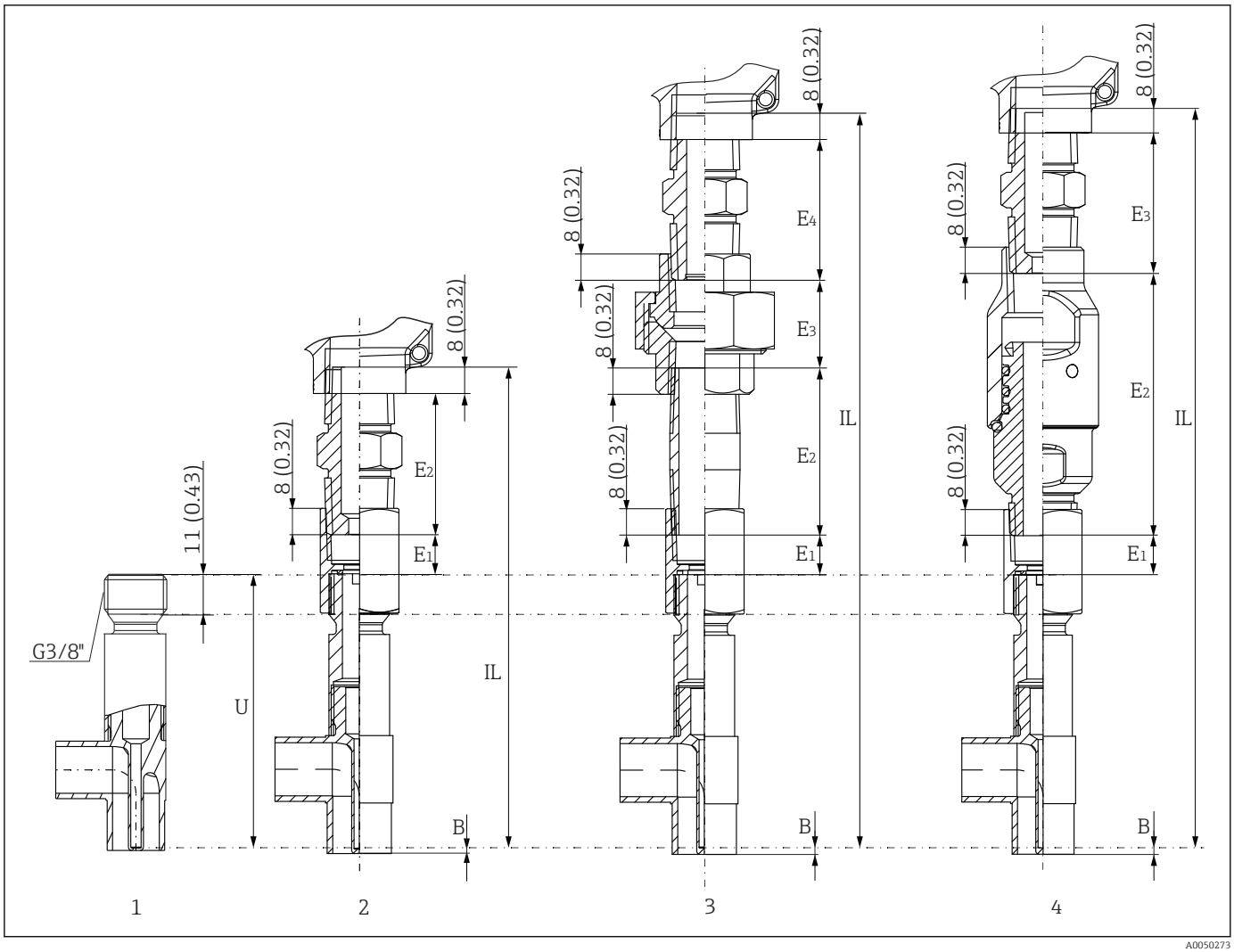

14 *Elbow thermowell as per DIN 11865 or ASME BPE*

1 *With extension neck connection G3/8"*
2 *With extension hex nipple and connection thread ½" NPT, torque 5 Nm (3.69 lbf ft)*
3 *With extension nipple-union-nipple (NUN) and connection thread ½" NPT, torque 5 Nm (3.69 lbf ft)*
4 *With quick-fastening iTHERM QuickNeck, torque 5 Nm (3.69 lbf ft), and glued with threadlocking adhesive*

- Pipe sizes as per DIN 11865 series C (ASME BPE) → 38
- 3-A marked for nominal diameters ≥ DN25
- EHEDG certified for nominal diameters ≥ DN25
- ASME BPE compliance for nominal diameters ≥ DN25
- IP69K protection class
- 1.4435+316L material, delta ferrite content < 0.5%
- Temperature range: −60 to +200 °C (−76 to +392 °F)
- Pressure range: PN25 as per DIN11865
- G3/8" thread for thermowell connection

Item	Version	Length
Extension neck length E	**Version 2:** Thermometer with extension hex nipple	E1 + E2 = 54.85 mm (2.16 in)
	Version 3: Thermometer with extension nipple-union-nipple (NUN)	E1 + E2 + E3 + E4 = 132 mm (5.2 in)
	Version 4: Thermometer with iTHERM QuickNeck	E1 + E2 + E3 = 135 mm (5.32 in)

Item	Version	Length
Immersion length U	Tee thermowell	83 mm (3.27 in)
Base thickness B	Tee thermowell Elbow thermowell	2 mm (0.079 in) 0.7 mm (0.03 in)

Due to the short immersion length U in the case of small pipe diameters, the use of iTHERM QuickSens inserts is recommended.

As a general rule, the longer the immersion length U, the better the measurement accuracy. For small pipe diameters it is advisable to use elbow thermowells to enable a maximum immersion length U.

The iTHERM TS212 insert is available as a spare part. The insert length (IL) depends on the immersion length of the thermowell (U) and the length of the extension neck (E). The insertion length (IL) must be taken into consideration when replacing the unit.

This can be calculated by means of the following formula: IL = U + E + 8 mm (0.32 in)

Insert

Depending on the application, iTHERM TS212 inserts with different RTD sensors are available for the thermometer:

Sensor	Standard thin-film		iTHERM StrongSens	iTHERM QuickSens [1]		Wire wound	
Sensor design; connection method	1x Pt100, 3- or 4-wire, PTFE insulated	2x Pt100, 2x3-wire, PTFE insulated	1x Pt100, 3- or 4-wire, mineral insulated	1x Pt100, 3- or 4-wire, mineral insulated	1x Pt100, 3- or 4-wire, PTFE insulated	1x Pt100, 3- or 4-wire, mineral insulated	2x Pt100, 2x3-wire, mineral insulated
Vibration resistance of the insert tip	Up to 3g		Enhanced vibration resistance > 60g	> 60g	3g	Up to 3g	
Measuring range; accuracy class	−50 to +200 °C (−58 to +392 °F), Class A or B		−50 to +500 °C (−58 to +932 °F), Class A or AA	−50 to +200 °C (−58 to +392 °F), Class A or AA		−200 to +600 °C (−328 to +1 112 °F), Class A or AA	
Diameter	6.35 mm (¼ in)		6 mm (0.24 in)	6 mm (0.24 in)	3 mm (0.12 in)	6.35 mm (¼ in); 3 mm (0.12 in)	

1) Recommended for immersion lengths U < 70 mm (2.75 in)

For more information on the deployed insert iTHERM TS212 with enhanced vibration resistance and fast-response sensor, see the Technical Information.

Spare parts currently available for your product can be found online at: http://www.products.endress.com/spareparts_consumables, product root: TM412. Always quote the serial number of the device when ordering spare parts! The insertion length IL is automatically calculated using the serial number.

Weight

Depends on product and configuration.

Material

Extension neck and thermowell, insert, process connection.

The temperatures for continuous operation specified in the following table are only intended as reference values for use of the various materials in air and without any significant compressive load.

The maximum operating temperatures can be reduced considerably in cases where abnormal conditions such as high mechanical load occur or in aggressive media.

Designation	Recommended max. temperature for continuous use in air	Properties
AISI 316L	650 °C (1202 °F) [1]	▪ Austenitic, stainless steel ▪ High corrosion resistance in general ▪ Particularly high corrosion resistance in chlorine-based and acidic, non-oxidizing atmospheres through the addition of molybdenum (e.g. phosphoric and sulfuric acids, acetic and tartaric acids with a low concentration) ▪ Increased resistance to intergranular corrosion and pitting ▪ The wetted part from a 316L thermowell withstand a passivation process with a 3% sulphuric acid ▪ Available with 3-A marked sensors

1) Can be used to a limited extent up to 800 °C (1472 °F) for low compressive loads and in non-corrosive media. Contact your Endress+Hauser sales team for further information.

Surface roughness

Values for wetted surfaces:

Standard surface, mechanically polished [1]	R_a ≤ 0.76 µm (30 µin)
Mechanically polished [1], buffed [2]	R_a ≤ 0.38 µm (15 µin)
Mechanically polished [1], buffed and electropolished	R_a ≤ 0.38 µm (15 µin)+ electropolished

1) Or equivalent treatment that guarantees R_a max
2) Not compliant with ASME BPE

Terminal heads

All terminal heads have an internal shape and size in accordance with DIN EN 50446, Form B, and a thermometer connection with a ½" NPT thread. All dimensions in mm (in). The sample cable glands in the diagrams correspond to M20x1.5 connections with non-Ex polyamide cable glands. Specifications without head transmitter installed. For ambient temperatures with head transmitter installed, see the 'Environment' section. → 🖹 24

As a special feature, Endress+Hauser offers terminal heads with optimized terminal accessibility for easy installation and maintenance.

TA30A	Specification
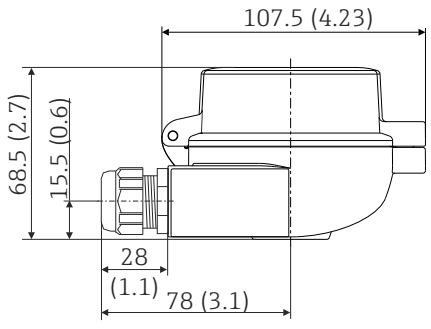	▪ Protection class: ▪ IP66/68 (NEMA Type 4x encl.) ▪ For ATEX: IP66/67 ▪ Temperature: −50 to +150 °C (−58 to +302 °F) without cable gland ▪ Material: aluminum, polyester powder coated Seals: silicone ▪ Cable entry thread: G ½", ½" NPT and M20x1.5; ▪ Protective fitting connection: ½" NPT or M24x1.5 ▪ Head color: blue, RAL 5012 ▪ Cap color: gray, RAL 7035 ▪ Weight: 330g (11.64 oz) ▪ Ground terminal, internal and external ▪ Available with 3-A marked sensors

TA30A with display window	Specification
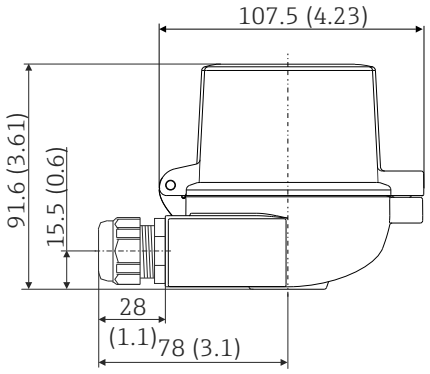	▪ Protection class: ▪ IP66/68 (NEMA Type 4x encl.) ▪ For ATEX: IP66/67 ▪ Temperature: −50 to +150 °C (−58 to +302 °F) without cable gland ▪ Material: aluminum, polyester powder coated Seals: silicone ▪ Cable entry thread: G ½", ½" NPT and M20x1.5 ▪ Protective fitting connection: ½" NPT or M24x1.5 ▪ Head color: blue, RAL 5012 Cap color: gray, RAL 7035 ▪ Weight: 420g (14.81 oz) ▪ With TID10 display ▪ Ground terminal, internal and external ▪ Available with 3-A marked sensors

TA30D	Specification
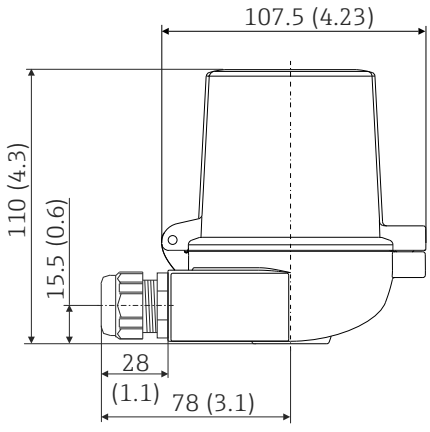	▪ Protection class: ▪ IP66/68 (NEMA Type 4x encl.) ▪ For ATEX: IP66/67 ▪ Temperature: −50 to +150 °C (−58 to +302 °F) without cable gland ▪ Material: aluminum, polyester powder coated Seals: silicone ▪ Cable entry thread: G ½", ½" NPT and M20x1.5 ▪ Protective fitting connection: ½" NPT or M24x1.5 ▪ Two head transmitters can be mounted. In the standard version, one transmitter is mounted in the terminal head cover and an additional terminal block is installed directly on the insert. ▪ Head color: blue, RAL 5012 ▪ Cap color: gray, RAL 7035 ▪ Weight: 390 g (13.75 oz) ▪ Ground terminal, internal and external ▪ Available with 3-A marked sensors

TA30P	Specification
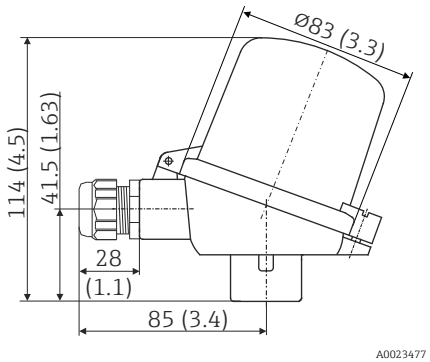	▪ Protection class: IP65 ▪ Max. temperature: −40 to +120 °C (−40 to +248 °F) ▪ Material: polyamide (PA), antistatic Seals: silicone ▪ Cable entry with thread: ½" NPT and M20x1.5 ▪ Protective fitting connection: M24x1.5 or ½" NPT ▪ Two head transmitters can be mounted. In the standard version, one transmitter is mounted in the terminal head cover and an additional terminal block is installed directly on the insert. ▪ Head and cap color: black ▪ Weight: 135 g (4.8 oz) ▪ Types of protection for use in hazardous locations: Intrinsic Safety (G Ex ia) ▪ Ground terminal: only internal via auxiliary terminal ▪ Not allowed for Class II and III applications ▪ Available with 3-A marked sensors

TA30R (optionally with display window in cover)	Specification
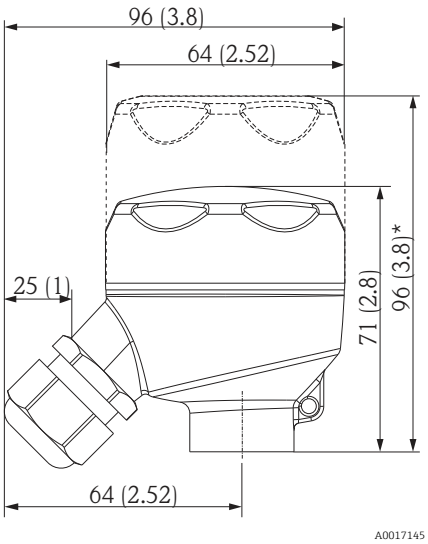 * Dimensions of version with display window in cover	▪ Degree of protection - standard version: IP69K (NEMA Type 4x encl.) Degree of protection - version with display window: IP66/68 (NEMA Type 4x encl.) ▪ Temperature: −50 to +130 °C (−58 to +266 °F) without cable gland ▪ Material: stainless steel 316L, abrasive-blasted or polished Seals: EPDM Display window: polycarbonate (PC) ▪ Cable entry thread ½" NPT and M20x1.5 ▪ Weight ▪ Standard version: 360 g (12.7 oz) ▪ Version with display window: 460 g (16.23 oz) ▪ Display window in cover optionally for head transmitter with display TID10 ▪ Protective fitting connection: M24x1.5 or ½" NPT ▪ Ground terminal: internal in standard version; external terminal optionally available ▪ Available with 3-A marked sensors ▪ Not allowed for Class II and III applications

TA30R (high version for two transmitters)	Specification
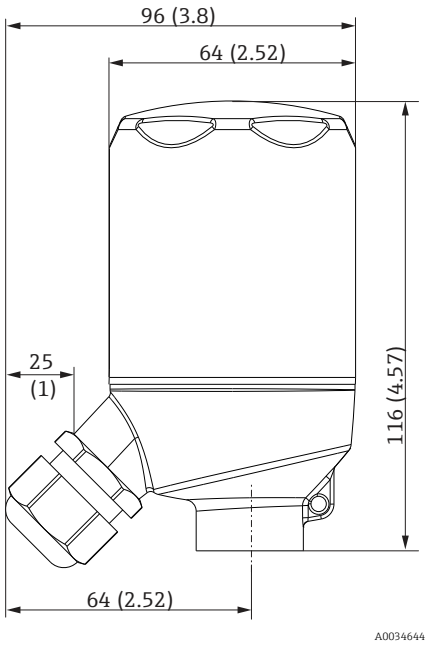	▪ Degree of protection: IP69K (NEMA Type 4x encl.) ▪ Temperature: −50 to +130 °C (−58 to +266 °F) without cable gland ▪ Material: stainless steel 316L, abrasive-blasted or polished Seals: EPDM ▪ Cable entry thread NPT ½" and M20x1.5 ▪ Weight: 460 g (16.23 oz) ▪ For two head transmitters ▪ Ground terminal: internal as standard ▪ Not allowed for Class II and III applications ▪ Available with 3-A marked sensors

TA30S	Specification
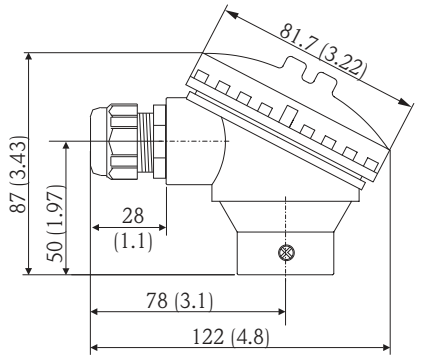	▪ Degree of protection: IP65 (NEMA Type 4x encl.) ▪ Temperature: −40 to +85 °C (−40 to +185 °F) without cable gland ▪ Material: polypropylene (PP), FDA-compliant, seals: O-ring EPDM ▪ Cable entry thread: ¾" NPT (with adapter for ½" NPT), M20x1.5 ▪ Protective assembly connection: ½" NPT ▪ Color: white ▪ Weight: approx. 100 g (3.5 oz) ▪ Ground terminal: only internal via auxiliary terminal ▪ Not allowed for Class II and III applications ▪ Available with 3-A marked sensors

Temperature field transmitter iTEMP TMT162	Specification
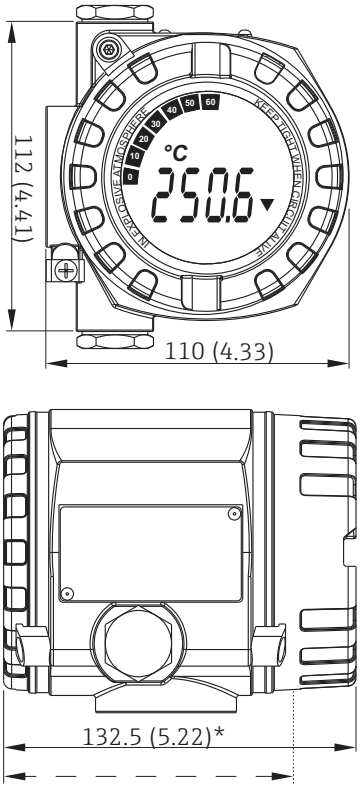 * Dimensions without display = 112 mm (4.41 in)	▪ Separate electronics compartment and connection compartment ▪ Protection class: IP66, 67, NEMA Type 4x ▪ Material: Die-cast aluminum housing AlSi10Mg with powder coating on polyester base or stainless steel 316L ▪ Display rotatable in 90° increments ▪ Cable entry: NPT ½" ▪ Bright backlit display with ease of visibility in bright sunshine or pitch darkness ▪ Gold plated terminals to avoid corrosion and additional measurement errors ▪ SIL certification as per IEC 61508:2010 (HART-protocol) ▪ Integrated overvoltage protection for the prevention of damage from overvoltage, optional The iTEMP TMT162 is installed as a terminal head in a vertical orientation, as shown in the picture opposite (thermometer facing downwards, cable connection facing upwards).

Cable glands and connectors [1)]

Type	Suitable for cable entry	Degree of protection	Temperature range	Suitable cable diameter
Cable gland, polyamide blue (indication of Ex-i circuit)	½" NPT	IP68	−30 to +95 °C (−22 to +203 °F)	7 to 12 mm (0.27 to 0.47 in)
Cable gland, polyamide	½" NPT, ¾" NPT, M20x1.5 (optionally 2x cable entry)	IP68	−40 to +100 °C (−40 to +212 °F)	5 to 9 mm (0.19 to 0.35 in)
	½" NPT, M20x1.5 (optionally 2x cable entry)	IP69K	−20 to +95 °C (−4 to +203 °F)	
Cable gland for dust ignition-proof area, polyamide	½" NPT, M20x1.5	IP68	−20 to +95 °C (−4 to +203 °F)	
Cable gland for dust ignition-proof area, nickel-plated brass	M20x1.5	IP68 (NEMA Type 4x)	−20 to +130 °C (−4 to +266 °F)	
M12 plug, 4-pin, 316 (PROFIBUS® PA, Ethernet-APL™, IO-Link®	½" NPT, M20x1.5	IP67	−40 to +105 °C (−40 to +221 °F)	-
M12 plug, 8-pin, 316	M20x1.5	IP67	−30 to +90 °C (−22 to +194 °F)	-
7/8" plug, 4-pin, 316 (FOUNDATION ™ Fieldbus, PROFIBUS® PA)	½" NPT, M20x1.5	IP67	−40 to +105 °C (−40 to +221 °F)	-

1) Depending on product and configuration

Cable glands are not available for encapsulated, flameproof thermometers.

Extension neck

Standard version of extension neck, or optionally with the quick-fastening iTHERM QuickNeck.
- iTHERM QuickNeck - tool-free removal of the insert:
  - Saves time/costs on frequently calibrated measuring points
  - Wiring mistakes avoided
- IP69K protection: safety under extreme process conditions

Connection between thermometer and thermowell must be installed with PTFE thread tape on all connections to achieve the IP69K rating.

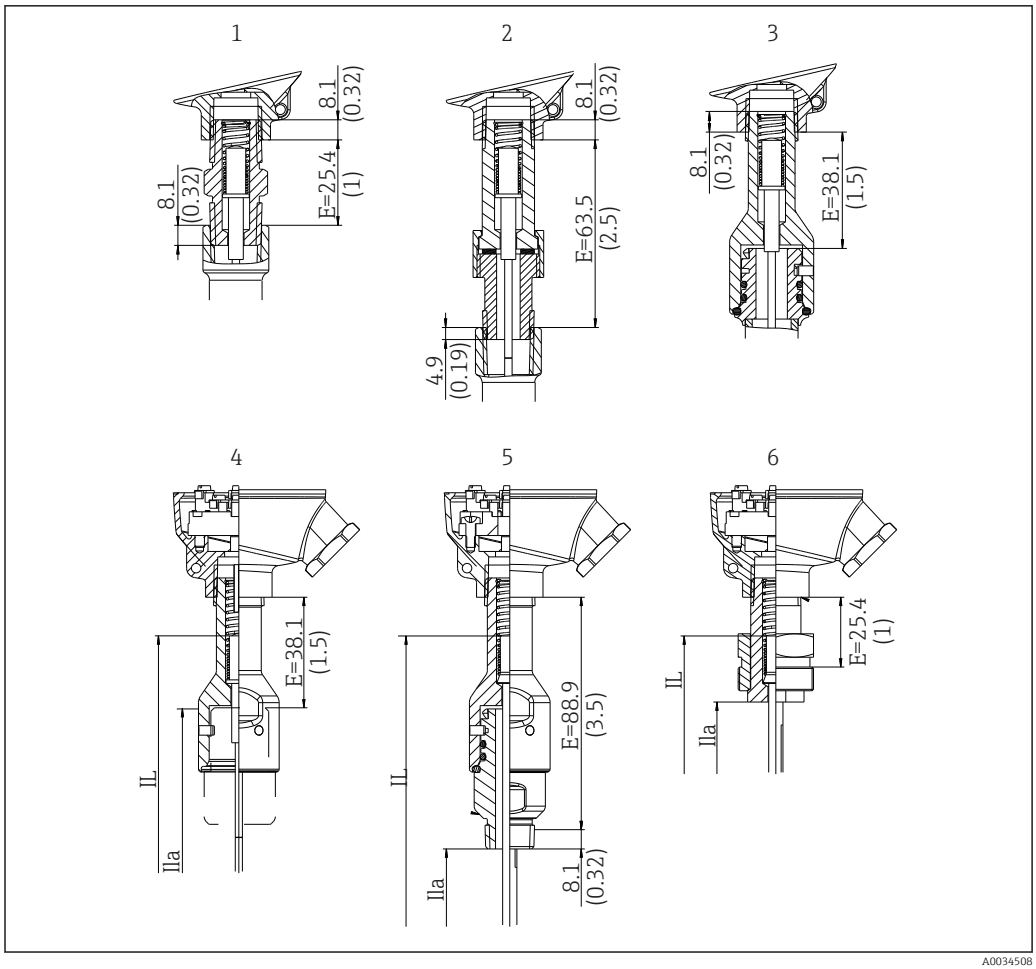

15 Dimensions of extension neck, different versions, each with ½" NPT thread to the terminal head

1 Extension hex nipple
2 Extension nipple union nipple (NUN)
3 Quick-fastening iTHERM QuickNeck
4 Quick-fastening iTHERM QuickNeck - upper part, for installation in an existing thermowell with iTHERM QuickNeck
5 Quick-fastening iTHERM QuickNeck complete, for mounting in existing thermowell with ½" NPT connection
6 1¼" x 18 UNEF thread, for mounting in existing thermowell
IL Insert length
ILa Insertion length (insert length below nipple)
E Length of the extension neck available at point of installation (provided one is available)

Process connections

All dimensions in mm (in).

Weld-in

Type	Type of fitting	Dimensions	Technical properties
Weld-in adapter 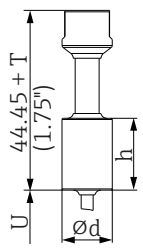	Cylindrical ½" NPS	Ød = ½" NPS, h = 38.1 mm (1.5 in), U = immersion length from lower edge, T = min. 50.8 mm (2 in)	▪ $P_{max.}$ depends on the weld-in process ▪ With 3-A symbol and EHEDG certification ▪ ASME BPE compliance
	Cylindrical ¾" NPS	Ød = ¾" NPS, h = 38.1 mm (1.5 in), U = immersion length from lower edge, T = min. 50.8 mm (2 in)	
	Cylindrical 1" NPS	Ød = 1" NPS, h = 38.1 mm (1.5 in), U = immersion length from lower edge, T = min. 50.8 mm (2 in)	

Detachable process connection

Type	Type of fitting	Dimensions		Technical properties	Conformity
	Ød: 1)	ØD	Øa		
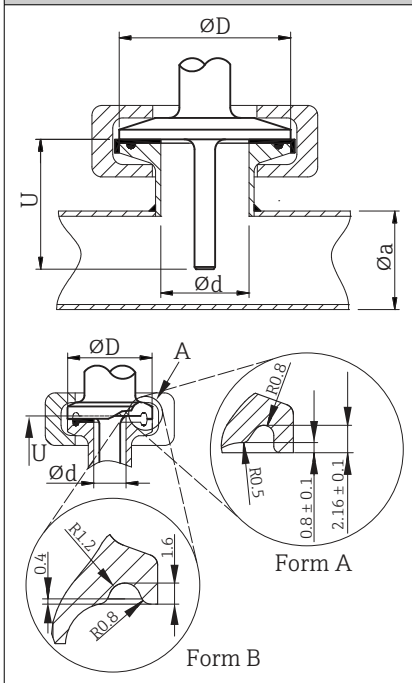 Form A: In compliance with ASME BPE Type A Form B: In compliance with ASME BPE Type B and ISO 2852	Tri-clamp ¾" (DN18), Form A 2)	25 mm (0.98 in)	-	▪ $P_{max.}$ = 16 bar (232 psi), depends on clamp ring and suitable seal ▪ With 3-A symbol	ASME BPE Type A
	Clamp ISO 2852 ½" (DN12 - 21.3) Form B	34 mm (1.34 in)	16 to 25.3 mm (0.63 to 0. 99 in)		ISO 2852
	Tri-clamp 1" - 1½" (DN25 - 38) Form B	50.5 mm (1.99 in)	29 to 42.4 mm (1.14 to 1. 67 in)	▪ $P_{max.}$ = 16 bar (232 psi), depends on clamp ring and suitable seal ▪ With 3-A symbol and EHEDG certification (combined with Combifit seal) ▪ Can be used with 'Novaseptic Connect (NA Connect)' which enables flush-mount installation	ASME BPE Type B
	Tri-clamp 2" (DN40 - 51) Form B	64 mm (2.52 in)	44.8 to 55. 8 mm (1.76 to 2. 2 in)		
	Tri-clamp 2½" (DN63.5) Form B	77.5 mm (3.05 in)	68.9 to 75. 8 mm (2.71 to 2. 98 in)		
	Tri-clamp 3" (DN70-76. 5) Form B	91 mm (3.58 in)	> 75.8 mm (2.98 in)		

1) Pipes in accordance with ISO 2037 and BS 4825 Part 1
2) Tri-clamp ¾" only possible with thermowell diameter 6.35 mm (¼ in) or 9.53 mm (⅜ in)

Type	Version G	Dimensions			Technical properties
		L1 thread length	A	1 (SW/AF)	
Thread according to ISO 228 (for Liquiphant weld-in adapter) 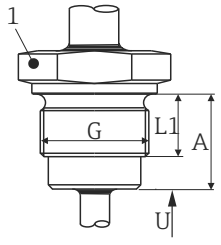	G¾" for FTL20/31/33 adapter	16 mm (0.63 in)	25.5 mm (1 in)	32	▪ $P_{max.}$ = 25 bar (362 psi) at max. 150 °C (302 °F) ▪ $P_{max.}$ = 40 bar (580 psi) at max. 100 °C (212 °F) ▪ For more information about hygienic compliance in conjunction with FTL31/33/50 adapters, see Technical Information TI00426F.
	G¾" for FTL50 adapter				
	G1" for FTL50 adapter	18.6 mm (0.73 in)	29.5 mm (1.16 in)	41	

Type	Type of fitting [1]	Dimensions				Technical properties	
		ϕD	ϕA	ϕB	h	$P_{max.}$	
Varivent® 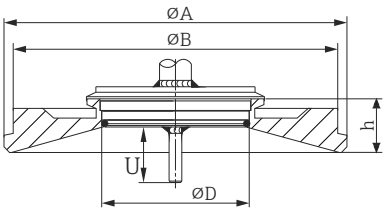	Type B	31 mm (1.22 in)	105 mm (4.13 in)	-	22 mm (0.87 in)	10 bar (145 psi)	▪ With 3-A symbol and EHEDG certification ▪ ASME BPE compliance
	Type F	50 mm (1.97 in)	145 mm (5.71 in)	135 mm (5.31 in)	24 mm (0.95 in)		
	Type N	68 mm (2.67 in)	165 mm (6.5 in)	155 mm (6.1 in)	24.5 mm (0.96 in)		

The VARINLINE® housing connection flange is suitable for welding into the conical or torispherical head in tanks or containers with a small diameter (≤ 1.6 m (5.25 ft)) and up to a wall thickness of 8 mm (0.31 in).
Varivent® Type F cannot be used for installations in pipes in combination with the VARINLINE® housing connection flange.

1) Options depend on product and configuration

Type	Technical properties
Varivent® for VARINLINE® housing for installation in pipes 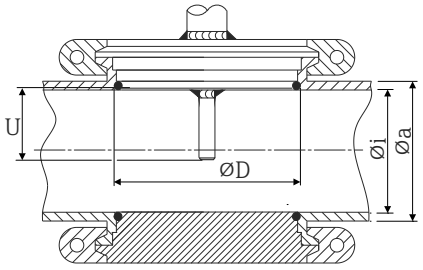	▪ With 3-A symbol and EHEDG certification ▪ ASME BPE compliance

Type of fitting [1]	Dimensions			$P_{max.}$
	ϕD	ϕi	ϕa	
Type N, according to DIN 11866, series A	68 mm (2.67 in)	DN40: 38 mm (1.5 in)	DN40: 41 mm (1.61 in)	DN40 to DN65: 16 bar (232 psi)
		DN50: 50 mm (1.97 in)	DN50: 53 mm (2.1 in)	
		DN65: 66 mm (2.6 in)	DN65: 70 mm (2.76 in)	
		DN80: 81 mm (3.2 in)	DN80: 85 mm (3.35 in)	DN80 to DN150: 10 bar (145 psi)
		DN100: 100 mm (3.94 in)	DN100: 104 mm (4.1 in)	
		DN125: 125 mm (4.92 in)	DN125: 129 mm (5.08 in)	
		DN150: 150 mm (5.9 in)	DN150: 154 mm (6.06 in)	
Type N, according to EN ISO 1127, series B	68 mm (2.67 in)	38.4 mm (1.51 in)	42.4 mm (1.67 in)	42.4 mm (1.67 in) to 60.3 mm (2.37 in): 16 bar (232 psi)
		44.3 mm (1.75 in)	48.3 mm (1.9 in)	
		56.3 mm (2.22 in)	60.3 mm (2.37 in)	
		72.1 mm (2.84 in)	76.1 mm (3 in)	76.1 mm (3 in) to 114.3 mm (4.5 in): 10 bar (145 psi)
		82.9 mm (3.26 in)	42.4 mm (3.5 in)	
		108.3 mm (4.26 in)	114.3 mm (4.5 in)	
Type N, according to DIN 11866, series C	68 mm (2.67 in)	OD 1½": 34.9 mm (1.37 in)	OD 1½": 38.1 mm (1.5 in)	OD 1½" to OD 2½": 16 bar (232 psi)
		OD 2": 47.2 mm (1.86 in)	OD 2": 50.8 mm (2 in)	
		OD 2½": 60.2 mm (2.37 in)	OD 2½": 63.5 mm (2.5 in)	
Type N, according to DIN 11866, series C	68 mm (2.67 in)	OD 3": 73 mm (2.87 in)	OD 3": 76.2 mm (3 in)	OD 3" to OD 4": 10 bar (145 psi)

Type				Technical properties
		OD 4": 97.6 mm (3.84 in)	OD 4": 101.6 mm (4 in)	
Type F, according to DIN 11866, series C	50 mm (1.97 in)	OD 1": 22.2 mm (0.87 in)	OD 1": 25.4 mm (1 in)	16 bar (232 psi)

1) Options depend on product and configuration

Due to the short immersion length U, the use of iTHERM QuickSens inserts is recommended.

Type	Type of fitting		Dimensions in mm (inch)			Technical properties
			ØD	L	s [1]	
Tee thermowell for weld-in as per DIN 11865 (Part C) 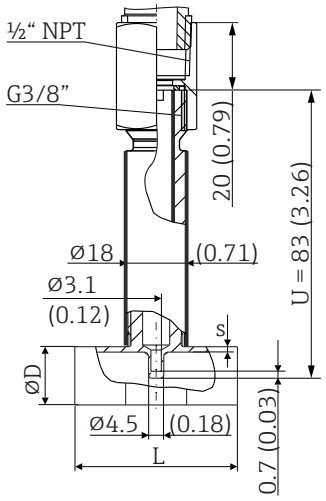	Part C [2]	DN12.7 PN25 (½")	12.7 mm (0.5 in)	48 mm (1.89 in)	1.65 mm (0.065 in)	▪ $P_{max.}$ = 25 bar (362 psi) ▪ R_a ≤ 0.38 µm (15 µin)+ electropolished [3]
		DN19.05 PN25 (¾")	19.05 mm (0.75 in)			
		DN25.4 PN25 (1")	19.05 mm (0.75 in)			
		DN38.1 PN25 (1½")	38.1 mm (1.5 in)			

1) Wall thickness
2) Dimensions as per ASME BPE
3) Exception: internal welded seams

Type	Type of fitting		Dimensions				Technical properties
			ØD	L1	L2	s [1]	
Elbow thermowell for weld-in as per DIN 11865 (Part C) 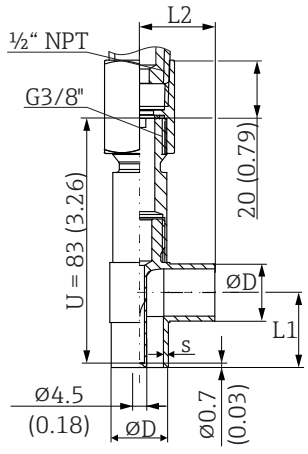	Part C	DN12.7 PN25 (½") [2]	12.7 mm (0.5 in)	22 mm (0.87 in)	24 mm (0.94 in)	1.65 mm (0.065 in)	▪ $P_{max.}$ = 25 bar (362 psi) ▪ R_a ≤ 0.38 µm (15 µin)+ electropolished [3]
		DN19.05 PN25 (¾")	19.05 mm (0.75 in)	25 mm (0.98 in)			

Type	Type of fitting		Dimensions				Technical properties
			ØD	L1	L2	s [1]	
		DN25.4 PN 25 (1")	19.05 mm (0.75 in)	28 mm (1.1 in)			
		DN38.1 PN25 (1½")	38.1 mm (1.5 in)	35 mm (1.38 in)			

1) Wall thickness
2) Dimensions as per ASME BPE
3) Exception: internal welded seams

Due to the short immersion length U, the use of iTHERM QuickSens inserts is recommended.

Shape of tip

The thermal response time, the reduction of the flow cross-section and the mechanical load that occurs in the process are the criteria that matter when selecting the shape of the tip. Advantages of using reduced thermometer tips:
- A smaller tip shape has less impact on the flow characteristics of the pipe carrying the medium.
- The flow characteristics are optimized, thereby increasing the stability of the thermowell.
- Endress+Hauser offers users a range of thermowell tips to meet every requirement:
  - Straight tip
  - Reduced tip of ϕ4.76 mm (3/16 in): walls of lower thickness significantly reduce the response times of the overall measuring point
  - Reduced tip for tee and elbow thermowell with ϕ4.5 mm (0.18 in)

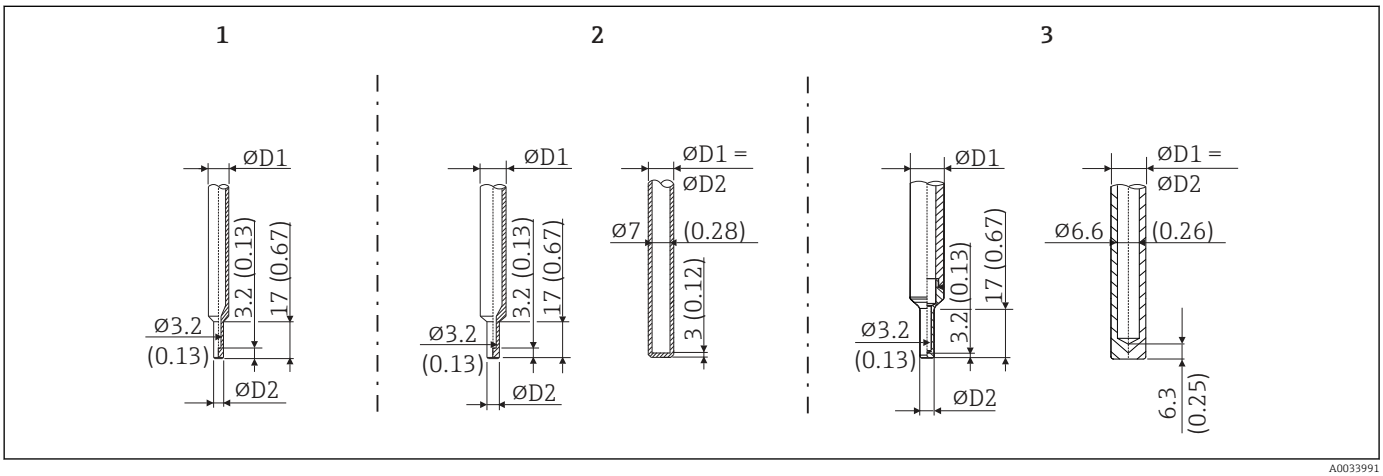

16 *Thermowell tips available (reduced or straight)*

Item no.	Thermowell (ΦD1)	Tip (ΦD2)	Insert (ΦID)
1	Φ6.35 mm (¼ in)	Reduced tip of Φ4.76 mm (3/16 in)	Φ3 mm (0.12 in)
2	Φ9.53 mm (⅜ in)	▪ Reduced tip of Φ4.76 mm (3/16 in) ▪ Straight tip	▪ Φ3 mm (0.12 in) ▪ Φ6.35 mm (¼ in) or 6 mm (0.24 in)
3	Φ12.7 mm (½ in)	▪ Reduced tip of Φ4.76 mm (3/16 in) ▪ Straight tip	▪ Φ3 mm (0.12 in) ▪ Φ6.35 mm (¼ in) or 6 mm (0.24 in)

It is possible to check the mechanical loading capacity as a function of the installation and process conditions online in the TW Sizing Module for thermowells in the Endress+Hauser Applicator software. See 'Accessories' section. → 45

Certificates and approvals

Current certificates and approvals for the product are available at www.endress.com on the relevant product page:

1. Select the product using the filters and search field.
2. Open the product page.
3. Select **Downloads**.

Hygiene standard

- ASME BPE (latest revision), Certificate of Conformance can be ordered for designated options.
- 3-A Certificate Authorization number 1144, 3-A Sanitary Standard 74-07. Listed process connections.
- EHEDG Certificate, Type EL CLASS I. EHEDG certified/tested process connections.
- FDA-compliant.
- All process contact parts comply with the requirements of guidance EMA/410/01 Rev.3. Furthermore, no grinding and polishing agents of animal origin have been used during the entire production of the process contact parts.

Materials in contact with food/product (FCM)

The process contact parts (FCM) are in conformity with the following European Regulations:
- Regulation (EC) No 1935/2004, on materials and articles intended to come into contact with food, article 3, paragraph 1, article 5 and 17.
- Regulation (EC) No 2023/2006 on good manufacturing practice for materials and articles intended to come into contact with food.
- Regulation (EU) No 10/2011 on plastic materials and articles intended to come into contact with food.

Material resistance

Material resistance - including resistance of housing - to the following Ecolab cleaning/disinfection agents:
- P3-topax 66
- P3-topactive 200
- P3-topactive 500
- P3-topactive OKTO
- And demineralized water

CRN approval

The CRN approval is only available for certain thermowell versions. These versions are identified and displayed accordingly during the configuration of the device.

Detailed ordering information is available for your nearest sales organization www.addresses.endress.com or in the Download Area under www.endress.com :

1. Select the country
2. Select Downloads
3. In the search area: select Approvals/approval type
4. Enter the product code or device
5. Start the search

Surface purity	Free from oil and grease, optional.
Thermowell testing and load capacity calculation	▪ Thermowell pressure tests are carried out in accordance with the specifications in DIN 43772. With regard to thermowells with reduced tip that do not comply with this standard, these are tested using the pressure of corresponding straight thermowells. Tests according to other specifications can be carried out on request. The liquid penetration test verifies that there are no cracks in the welded seams of the thermowell. ▪ PMI test, dye penetration test, TW welding, internal hydrostatic pressure, etc. each with inspection certificate ▪ Load capacity calculation for the thermowell as per DIN 43772

Ordering information

Detailed ordering information is available from your nearest sales organization www.addresses.endress.com or in the Product Configurator at www.endress.com:

1. Select the product using the filters and search field.
2. Open the product page.
3. Select **Configuration**.

Product Configurator - the tool for individual product configuration
- Up-to-the-minute configuration data
- Depending on the device: direct input of information specific to the measuring point, such as the measuring range or operating language
- Automatic verification of exclusion criteria
- Automatic creation of the order code and its breakdown in PDF or Excel output format
- Ability to order directly in the Endress+Hauser Online Shop

Accessories

The accessories currently available for the product can be selected at www.endress.com:

1. Select the product using the filters and search field.
2. Open the product page.
3. Select **Spare parts & Accessories**.

Device-specific accessories

Flexible handle cap to cover the QuickNeck bottom part 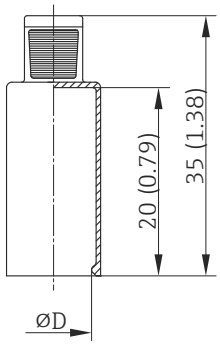	Diameter ØD: 24 to 26 mm (0.94 to 1.02 in) Material: Thermoplastic polyolefin - elastomer (TPE), free from plasticizers Maximum temperature: +150 °C (+302 °F) **Order number:** 71275424

Weld-in adapter

For more information about order codes and hygienic compliance of the adapters and spare parts, see Technical Information (TI00426F).

Weld-in adapter	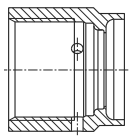 A0008246	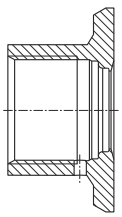 A0008251	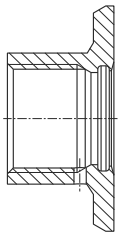 A0008256	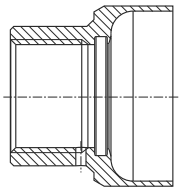 A0011924	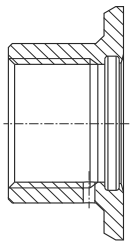 A0008248	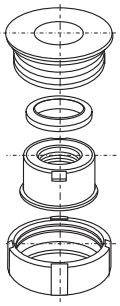 A0008253
	G ¾", d=29 for pipe-mounting	**G ¾", d=50 for vessel-mounting**	**G ¾", d=55 with flange**	**G 1", d=53 without flange**	**G 1", d=60 with flange**	**G 1" adjustable**
Material	316L (1.4435)	316L (1.4435)	316L (1.4435)	316L (1.4435)	316L (1.4435)	316L (1.4435)
Roughness µm (µin) process side	≤1.5 (59.1)	≤0.8 (31.5)	≤0.8 (31.5)	≤0.8 (31.5)	≤0.8 (31.5)	≤0.8 (31.5)

Maximum process pressure for the weld-in adapters:
- 25 bar (362 PSI) at maximum 150 °C (302 °F)
- 40 bar (580 PSI) at maximum 100 °C (212 °F)

Service-specific accessories

Accessories	Description
Applicator	Software for selecting and sizing Endress+Hauser devices: ▪ Calculation of all the necessary data for identifying the optimum device: e.g. pressure loss, accuracy or process connections. ▪ Graphic illustration of the calculation results Administration, documentation and access to all project-related data and parameters over the entire life cycle of a project. Applicator is available: Via the Internet: https://portal.endress.com/webapp/applicator

Accessories	Description
Configurator	Product Configurator - the tool for individual product configuration ▪ Up-to-the-minute configuration data ▪ Depending on the device: direct input of information specific to the measuring point, such as the measuring range or operating language ▪ Automatic verification of exclusion criteria ▪ Automatic creation of the order code and its breakdown in PDF or Excel output format ▪ Ability to order directly in the Endress+Hauser Online Shop The Product Configurator is available on the Endress+Hauser website: www.endress.com-> Select your country -> Click "Products" -> Select the product using the filters and search field -> Open product page -> The "Configure" button to the right of the product image opens the Product Configurator.
FieldCare SFE500	FDT-based plant asset management tool from Endress+Hauser. It can configure all smart field units in your system and helps you manage them. By using the status information, it is also a simple but effective way of checking their status and condition. For details, see Operating Instructions BA00027S and BA00065S
DeviceCare SFE100	Configuration tool for devices via fieldbus protocols and Endress+Hauser service protocols. DeviceCare is the tool developed by Endress+Hauser for the configuration of Endress+Hauser devices. All smart devices in a plant can be configured via a point-to-point or point-to-bus connection. The user-friendly menus enable transparent and intuitive access to the field devices. For details, see Operating Instructions BA00027S

System components

Process indicators from the RIA product family

Easily readable process indicators with various functions: loop-powered indicators for displaying 4 to 20 mAvalues, display of up to four HART variables, process indicators with control units, limit value monitoring, sensor power supply, and galvanic isolation.

Universal application thanks to international hazardous area approvals, suitable for panel mounting or field installation..

For more information, please refer to: www.endress.com

RN series active barrier

Single- or two-channel active barrier for safe separation of 0/4 to 20 mA standard signal circuits with bidirectional HART transmission. In the signal duplicator option, the input signal is transmitted to two galvanically isolated outputs. The device has one active and one passive current input; the outputs can be operated actively or passively.

For more information, please refer to: www.endress.com

Data Manager of the RSG product family

Data Managers are flexible and powerful systems to organize process values. Up to 20 universal inputs and up to 14 digital inputs for direct connection of sensors, optionally with HART, are available as an option. The measured process values are clearly presented on the display and logged safely, monitored for limit values and analyzed. The values can be forwarded via common communication protocols to higher-level systems and connected to one another via individual plant modules.

For more information, please refer to: www.endress.com

Documentation

For an overview of the scope of the associated Technical Documentation, refer to the following:
- *Device Viewer* (www.endress.com/deviceviewer): Enter the serial number from the nameplate
- *Endress+Hauser Operations app*: Enter serial number from nameplate or scan matrix code on nameplate.

The following document types are available in the Downloads area of the Endress+Hauser website (www.endress.com/downloads), depending on the device version:

Document type	Purpose and content of the document
Technical Information (TI)	**Planning aid for your device** The document contains all the technical data on the device and provides an overview of the accessories and other products that can be ordered for the device.
Brief Operating Instructions (KA)	**Guide that takes you quickly to the 1st measured value** The Brief Operating Instructions contain all the essential information from incoming acceptance to initial commissioning.
Operating Instructions (BA)	**Your reference document** The Operating Instructions contain all the information that is required in various phases of the life cycle of the device: from product identification, incoming acceptance and storage, to mounting, connection, operation and commissioning through to troubleshooting, maintenance and disposal.
Description of Device Parameters (GP)	**Reference for your parameters** The document provides a detailed explanation of each individual parameter. The description is aimed at those who work with the device over the entire life cycle and perform specific configurations.
Safety instructions (XA)	Depending on the approval, safety instructions for electrical equipment in hazardous areas are also supplied with the device. These are an integral part of the Operating Instructions. The nameplate indicates which Safety Instructions (XA) apply to the device.
Supplementary device-dependent documentation (SD/FY)	Always comply strictly with the instructions in the relevant supplementary documentation. The supplementary documentation is a constituent part of the device documentation.



www.addresses.endress.com

Endress+Hauser

People for Process Automation