Product Bulletin
D104561X012
September 2026

Fisher™ FIELDVUE™ DPC2K

Digital Process Controller



FISHER™

EMERSON™

The Fisher FIELDVUE DPC2K digital process controller (Figure 1) is an electro-pneumatic PID controller that provides local control for continuous, single PID loops. Installation, configuration, and monitoring are fast and easy with network connected Ethernet communication, providing application flexibility for expansion or modernization projects.

Control at the Valve

The DPC2K may be connected directly to the process and has an integral travel sensor that provides actual feedback when mounted on a control valve. It uses proven linkageless non-contacting technology that supports both rotary and linear valve applications. The DPC2K provides direct/reverse-acting PID, and advanced functions such as anti-reset windup and dynamic reset limiting.

Features

Application Flexibility

- Control at the Valve - Easily apply to pressure loop applications using the optional integral pressure sensor. Application flexibility for other process control applications such as temperature, level, flow, and more using a 4 to 20 mA transmitter.

- PID Control - With both pneumatic and analog control outputs, the DPC2K is ideal for use in expansion or modernization projects, including for air/gas operated actuators or analog control for electric actuators, variable frequency drives, and pumps.

- Intuitive and Simple Configuration - Traditional controllers typically require skilled programming and can be difficult to support and maintain. Using LoopConnect™ software, configuration and setup are straightforward and easy to navigate.

Safety and Reliability

- Tested in Use - The low-bleed pneumatic design has been field proven to provide reliable control in harsh environments. Non-contact readback of the valve position ensures proper operation of the PID control algorithm.

- At a Glance Displays — User-friendly displays in the software and at the local user interface provide easy access to the information needed to keep the process running smoothly.

Efficient Operation

- Fast Commissioning - When compared to a programmed solution, a configured instrument such as the DPC2K reduces the time and labor needed to bring the process loop into operation.

- Networkability - Ethernet communications allows for quick integrate into SCADA or control systems. Remote monitoring is supported via Modbus TCP or Modbus RTU serial data paths.

- Local Access - The six button interface supports local operation even in harsh environments.

Process Data

Stranded process data becomes a thing of the past when using the DPC2K as an upgrade for standalone pneumatic controllers.

Data can be used for near real time data driven decisions which can save money by averting downtime and improving the performance of process systems.

Figure 1. Fisher DPC2K Digital Process Controller



X1901

BASE UNIT WITH PNEUMATIC OUTPUT OPTION



X1920

BASE UNIT WITH ANALOG OUTPUT

Networked communication and simplified monitoring allow your support infrastructure to troubleshoot process issues and prepare mitigation, therefore minimizing the downtime needed to diagnose a potential problem.

With multiple simultaneous sessions supported, the right resources can collaborate to optimize performance of the process loop and take the guesswork out of tuning and operation. This also enhances employee safety by eliminating unnecessary travel, reducing on-site risk, and minimizing process disruptions.

Designed to integrate with your company's network security, the DPC2K provides flexible methods to secure communications by protocol and port. A physical switch can lock configurations and help prevent unauthorized changes to device settings. The firmware utilizes priority for the control algorithm to ensure operation in case of cyber attacks against the network infrastructure. As part of a comprehensive cybersecurity strategy, asset owners are responsible for implementing appropriate physical security measures, network protections, and access management practices.

Value

- Cost Effective - The integrated design of the DPC2K significantly reduces the cost of installation compared to other electro-pneumatic solutions.

  Once installed, the self-contained package ensures the lowest cost of implementation. Low power electronics and optional integrated pressure sensor and pneumatic output, shown in Figure 2, minimize the need for extra wiring, conduit, and enclosures.

- Application Flexibility - The DPC2K supports a variety of measurement types and provides control signals for either pneumatic or analog controls. Almost anywhere a single PID control loop is required, the DPC2K can be counted on to provide a consistent user experience.

- Ease of Use - The LoopConnect Configuration and Monitoring software interface allows the grouping of task-based actions, thus simplifying configuration. The software uses drag and drop, guided tasks, color changes, and simple data entry to create a consistent user experience for a wide range of applications and process loop performance requirements.

  Monitoring of Alerts, Alarms and Process Status is available on network connected controllers.

- Lower Support Costs - The consistent user experience provided by LoopConnect software helps reduce troubleshooting and product support needs.

  Digital communication enables easy access to the condition of the process loop. Ethernet communication supports multiple simultaneous sessions which may be monitored by operations, maintenance, and engineering. These connections ensure all groups can make real time process control and maintenance decisions, reducing the need for manual oversight of the control loop.

Performance

- Easy Adjustment and Tuning - The electro-pneumatic DPC2K improves the ability to correctly tune your process versus pneumatic only controllers by making the data available for real time trending, setting PID parameters digitally, and by remote monitoring of the loop performance.

  With legacy pneumatic instruments, small dial changes or movements could result in undesired or unexpected tuning changes. With a digital instrument, tuning parameters are entered directly and the PID control algorithm responds appropriately. Loop response and disturbance rejection are easily setup through the local interface or remotely via LoopConnect software. This flexibility in responsiveness ensures your operation maintains productivity throughout the lifecycle.

- High Sample Rate and Configurable Deadbands allow you to balance performance with valve longevity, resulting in improved process stability and valve performance.

Figure 2. Fisher DPC2K Digital Process Controller

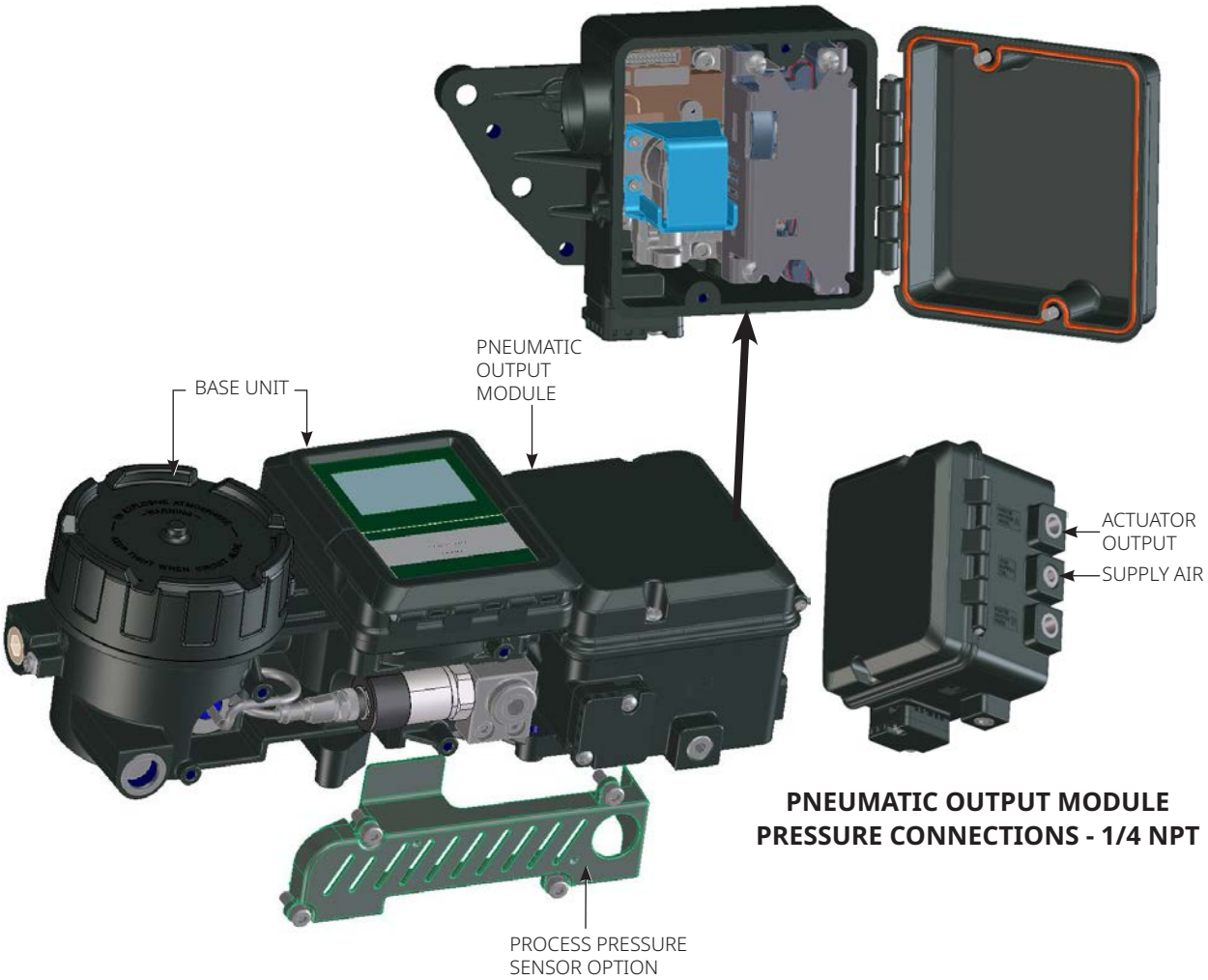

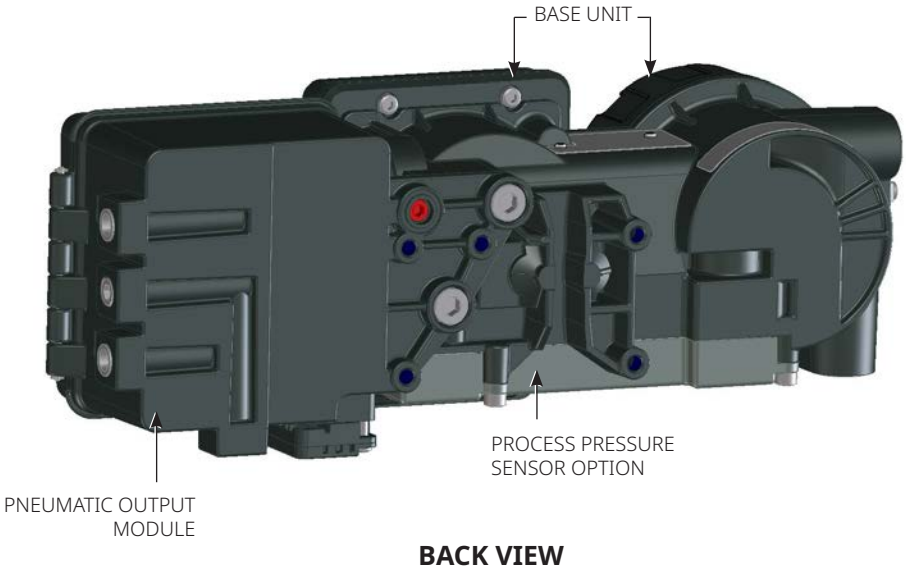

LoopConnect Configuration and Monitoring Software

LoopConnect Software is used for configuration, calibration, monitoring and troubleshooting the DPC2K controller.

The software features five dashboards: Control (main dashboard, see Figure 3), Events, Loop, I/O, and Instrument. The Control and Event dashboards are used for operation. The Loop, I/O, and Instrument dashboards are used for configuration.

Figure 3. LoopConnect CONTROL Dashboard

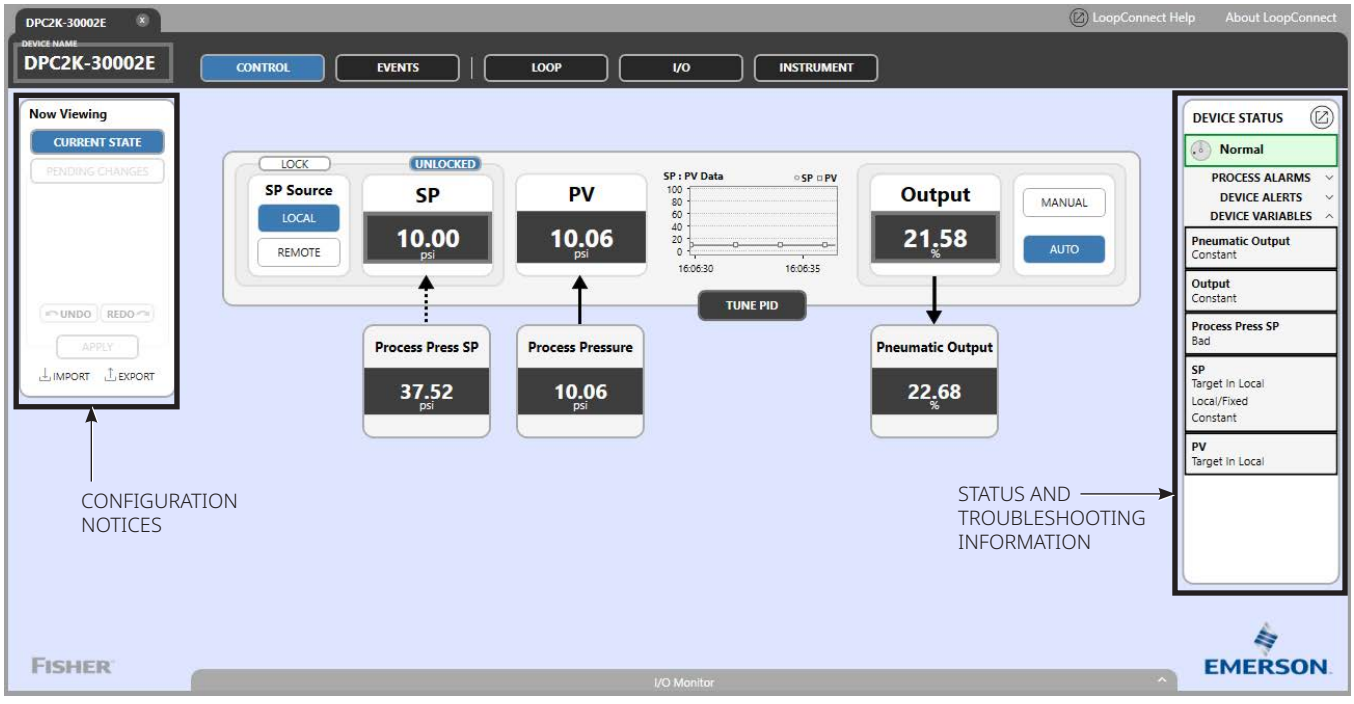

Table 1. Specifications

Base Unit (Analog Output) **These specifications also apply to the Pneumatic Output Option** **The Base Unit may also include the Process Pressure Sensor Option**	
Available Mounting	**I/O Scan and PID Update Rate**
■ Integral mounting to Fisher 657/667 actuators ■ Integral mounting to Fisher rotary actuators ■ Sliding-stem linear applications ■ 2 in. Pipestand Remote Mount	50 msec (20x/sec)
Actuator Compatibility	**Communication Protocol**
Stem Travel (Sliding-Stem Linear): Linear actuators with rated travel between 6.35 mm / 0.25 in. and 606 mm / 23-7/8 in. Shaft Rotation (Quarter-Turn Rotary) [(1)]: Rotary actuators with rated travel between 45° and 180°	■ Serial (RS-485): Modbus RTU, Supports function codes Baud: Configured 9600 to 256,000 baud Default 115,200 ■ Ethernet: Modbus TCP, HART-IP (Common commands and Universal commands)
Instrument Power	**Electromagnetic Compatibility**
9 to 28 V DC Input Power Draw Base Unit: 1 W nominal with all I/O[(2)]: 2 W, max	Meets EN 61326-1:2013 Immunity: Industrial locations per Table 2 of the EN 61326 1 standard. Emissions: Class A ISM equipment rating: Group 1, Class A
Maximum Voltage	**Vibration Testing Method**
28 V DC, Reverse Polarity protected	Tested per ANSI/ISA-S75.13.01 Section 5.3.5
Operating Ambient Temperature Limits [(3)(4)]	**Humidity Testing Method**
-40 to +80 °C / -40 to +176 °F	Tested per IEC 61514-2
Inputs [(5)]	**Hazardous Area Approvals and Other Classifications**
Analog Input 1: 4 to 20 mA, 250 ohm internal resistance Accuracy: ±0.25% Protected to ±30 V DC Analog Input 2: 4 to 20 mA with internal 28 V DC Source, 250 ohm internal resistance Accuracy: ±0.25% Internal 28 V supply, overcurrent protection Protected to ±30 V DC Current: 200 mA	cCSAus (Canada and United States) Class I Div 1 CD - Explosion-proof Class I Div 2 A, B, C, D - Non-incendive Class I Zone 1 Ex db ia IIB T4 Gb Class I Zone 2 Ex ec ic IIB T4 Gc ATEX: Flameproof, Ex db ia IIB T4 Gb IECEx Flameproof - Ex db ia IIB T4 Gb Increased Safety - Ex ec ic IIB T4 Gc ECAS: Emirates Conformity Assessment Scheme (UAE) MOL: Ministry of Labor (Taiwan)
Output [(5)]	
Analog Output: 4 to 20 mA with internal 28 V DC Source, 1 K ohm maximum Accuracy: 0.35%	

- continued -

Table 1. Specifications (continued)

Electrical Housing	Weight
cCSAus: Type 4X, IP66 ATEX and IECEx: IP66	Electric Only Without process pressure sensor: 3.3 kg / 7.4 lbs With process pressure sensor: 3.7 kg / 8.1 lbs With Pneumatic Output Option Without process pressure sensor: 5.5 kg / 12.2 lbs With process pressure sensor: 5.9 kg / 12.9 lbs
Electrical Connections	
1/2 NPT internal, two conduit entries (6)	
General Electrical Safety - Environmental Conditions	**Construction Materials**
Use: Indoor and Outdoor Altitude: up to 2000m Temperature: see operating ambient temperature limits Relative Humidity: 5 - 95% Supply Voltage Fluctuations: N/A, not connected to Mains Wet Locations: Yes	Housing, module base and terminal box: A03600 low copper aluminum alloy
	Dimensions
	See Figure 4

Pneumatic Output Option

The Base Unit specifications also apply to the Pneumatic Output Option
The Pneumatic Output Option may also include the Process Pressure Sensor Option

Supply Pressure	Connections
Minimum Recommended: 0.3 bar / 5 psig higher than maximum actuator requirements Maximum: 10.0 bar / 145 psig or maximum pressure rating of the actuator, whichever is lower Medium: Air or Natural Gas Supply medium must be clean, dry and noncorrosive **Per ISA Standard 7.0.01** A maximum 40 micrometer particle size in the air system is acceptable. Further filtration down to 5 micrometer particle size is recommended. Lubricant content is not to exceed 1 ppm weight (w/w) or volume (v/v) basis. Condensation in the air supply should be minimized Pressure dew point: At least 10 °C less than the lowest ambient temperature expected **Per ISO 8573-1** Maximum particle density size: Class 7 Oil content: Class 3 Pressure dew point: Class 3	Supply Pressure: 1/4 NPT internal Output Pressure: 1/4 NPT internal Tubing: 3/8 in. recommended Vent: 3/8 NPT internal
	Output Signal
	Pneumatic signal, up to full supply pressure Minimum Span: 0.4 bar / 6 psig Maximum Span: 9.5 bar / 140 psig Action: Single
	Low Bleed Steady-State Air Consumption (7)(8)(9)
	At 1.4 bar / 20 psig supply pressure: 0.056 normal m^3/hr / 2.1 scfh, average At 5.5 bar / 80 psig supply pressure: 0.184 normal m^3/hr / 6.9 scfh, average
	Maximum Output Capacity (7)(8)
	At 1.4 bar / 20 psig supply pressure: 10.0 normal m^3/hr / 375 scfh At 5.5 bar / 80 psig supply pressure: 29.5 normal m^3/hr / 1100 scfh

- continued -

Table 1. Specifications (continued)

Process Pressure Sensor Option **The Process Pressure Sensor option can be used with either the Base Unit (Analog Output) or the Pneumatic Output Option**	
Pressure Ranges	**Construction**
Sealed Gauge: 2.1, 6.9, 20.7, 41.4, 103, 344.7 bar / 30, 100, 300, 600, 1500, 5000 psi ranges available Process Pressure Sensor Overpressure Limit: 2.5 × the sensor full-scale (FS) pressure range	316 stainless steel wetted parts
Compensated Temperature range (3)	**Pressure Port**
-20 to +80 °C / -4 to +176 °F	1/4 NPT
Total Accuracy	**Canadian Registration (CRN)**
Reference accuracy: ±0.35% Temperature Sensitivity: < 0.3% per 28 °C (10)	Approved under CRN 0F24844.5

NOTE: Specialized instrument terms are defined in ANSI/ISA Standard 51.1 - Process Instrument Terminology.

1. NAMUR mounting is not supported on quarter-turn rotary actuators.
2. A fully loaded and communicating DPC2K adds 2 Watts plus safety factor for solar applications.
3. The pressure/temperature limits in this document and any other applicable code or standard should not be exceeded.
4. Temperature limits vary based on hazardous area approval.
5. Shielded cable is recommended in applications where high electromagnetic interference may be present.
6. 14 to 22 AWG recommended wire size.
7. Normal m^3/hour - Normal cubic meters per hour at 0 °C and 1.01325 bar, absolute.
   Scfh - Standard cubic feet per hour at 60 °F and 14.7 psia.
8. Values at 1.4 bar / 20 psig based on a single-acting direct relay.
9. The Quad O steady-state consumption requirement of 6 scfh can be met by a DPC2K. The 6 scfh requirement can be met by low bleed relay C when used with up to 5.2 bar / 75 psi supply of Natural Gas at 16 °C / 60 °F.
10. Applicable from -20 °C to +85 °C. From -20 °C to -40 °C, allowed temperature drift is 1.5% per 20 °C.

Figure 4. Dimensions

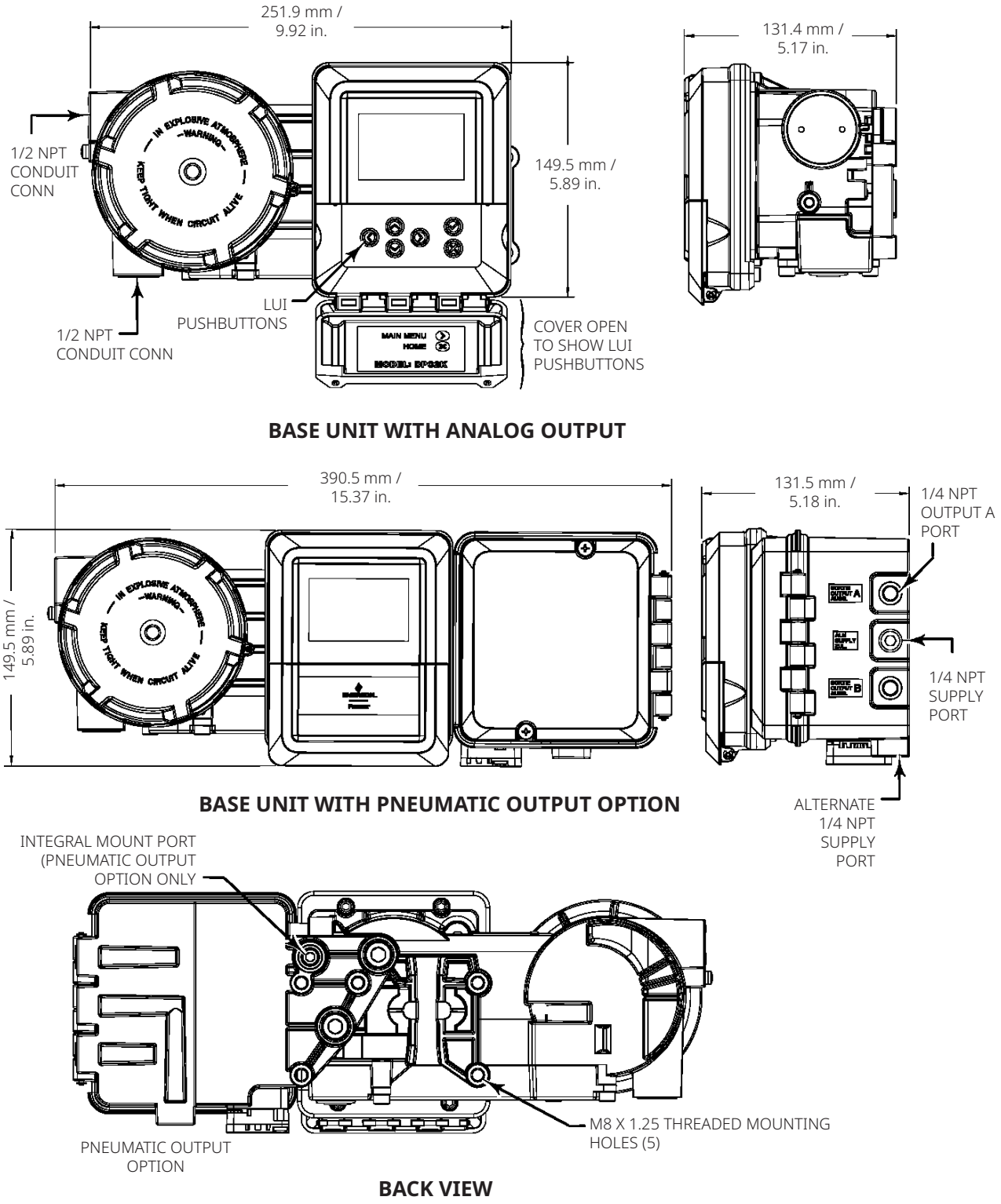

Table 2. Product Selection

Assembly	Item	Option	Descriptive Element	Description
Base Unit	A	1	Base Unit Analog Output with Travel	Single PID Loop Controller for continuous control and use with analog actuators (4 to 20 mA) Aluminum construction Operating temperature from -40 °C to +80 °C
		2	Base Unit Pneumatic Output with Travel	Single PID Loop Controller for continuous control at the valve with air operated actuators Aluminum construction
Option Pneumatic Assembly (when specified)	B	1	Low Bleed Single-Acting Direct	Less than 3.0 scfh @ 20 psi, meets Quad O requirements Operating temperature from -40 °C to +80 °C Pneumatic assembly is comprised of I/P and relay
Option Pressure Sensor (sealed gage)	C	1	2.1 Bar	2.1 Bar / 0 to 30 Psi
		2	6.9 Bar	6.9 Bar / 100 Psi
		3	20.1 Bar	20.1 Bar / 300 Psi
		4	41.4 Bar	41.4 Bar / 600 Psi
		5	103.4 Bar	103.4 Bar / 1500 Psi
		6	344.7 Bar	344.7 Bar / 5000 Psi
- - -	**Item**	**Option**	**Agency (Location)**	**Protection Method**
Hazardous Area Approval / Classification	D	1	cCSAus (Canada and United States)	Explosion-proof, Non-incendive, Class I Zone 1, Class I Zone 2
		2	ATEX	Flameproof
		3	IECEx	Flameproof, Increased Safety
		4	ECAS (UAE)	Flameproof, Increased Safety
		5	MOL (Taiwan)	Flameproof, Increased Safety

DPC2KX1-A B C D

Examples

a. DPC2K with Analog Output and Pressure Sensor for pressure measurement/control:
DPC2KX1-A1 C3

b. DPC2K for use with air-operated valves and Pressure Sensor for pressure measurement/control:
DPC2KX1-A2 B1 C4

Fisher.com

Facebook.com/FisherValves

LinkedIn.com/groups/3941826

X.com/FisherValves

D104561X012 © 2023, 2026 Emerson. All rights reserved. The Emerson logo is a trademark and service mark of Emerson Electric Co. Fisher and FIELDVUE are each a mark of an entity in the Emerson family of businesses. All other marks are the property of their respective owners.

Neither Emerson, nor any of its affiliated entities assume responsibility for the selection, use or maintenance of any product. Responsibility for proper selection, use, and maintenance of any product remains solely with the purchaser and end user.

The contents of this publication are presented for informational purposes only, and while every effort has been made to ensure their accuracy, they are not to be construed as warranties or guarantees, express or implied, regarding the products or services described herein or their use or applicability. All sales are governed by our terms and conditions, which are available upon request. We reserve the right to modify or improve the designs or specifications of such products at any time without notice.

Emerson
Marshalltown, Iowa 50158 USA
Sorocaba, 18087 Brazil
Cernay, 68700 France
Dubai, United Arab Emirates
Singapore 128461 Singapore

www.Fisher.com

FISHER

EMERSON