TI01881F/00/EN/01.26-00
71755804
2026-01-12

Technical Information
Liquiphant FailSafe FTL85

Vibronic



Coated level switch for liquids for failsafe overfill protection system

Application

- Level switch for all liquids, for minimum or maximum detection in vessels e.g. process tanks, storage tanks, and piping, even in hazardous areas
- Reliable level switch for safety applications up to SIL 3
- A permanent LIVE signal is used for function monitoring
- Process temperature range: −50 to 150 °C (−58 to 300 °F)
- Pressures up to 40 bar (580 psi)
- Viscosities up to 10 000 mPa·s

Benefits

- 4-20mA interface (according to NAMUR NE06/NE43): easy integration via the evaluation unit (Nivotester FailSafe FTL825) with two-channel output (safety contacts) and locking option, or directly into a safety PLC
- Use in safety systems with functional safety requirements up to SIL 3 in accordance with IEC 61508/IEC 61511-1
- Proof testing: proof testing interval up to 12 years
- Slaves tested at the press of a button
- Permanent self-monitoring/internal redundancy
- No adjustment: quick, low-cost commissioning
- Monitoring of vibrating fork for damage, corrosion, buildup and mechanical blocking
- Second process sealing (second line of defense) can be selected as an option

Endress+Hauser
People for Process Automation

Table of contents

About this document 3
Safety symbols 3
Electrical symbols 3
Symbols for certain types of Information 3
Symbols in graphics 3
Graphic conventions 3

Function and system design 4
Measuring principle 4
Measuring system 4
Dependability 4

Input 4
Measured variable 4
Measuring range 5

Output 5
Output signal 5
Signal on alarm 5
Load 5
Ex connection data 5
Galvanic isolation 5
Switch output 5

Electrical connection 6
Terminal assignment 6
Available device plugs 6
Supply voltage 7
Power consumption 7
Reverse polarity protection 7
Electrical connection 7
Potential equalization 8
Cable specifications 8
Overvoltage protection 8

Performance characteristics 9
Reference operating conditions 9
Taking the switch point into consideration 9
Maximum measurement error 9
Hysteresis 9
Repeatability 10
Influence of process temperature 10
Influence of process medium density 10
Influence of process pressure 10

Installation 10
Mounting location, orientation 10
Installation instructions 10
Installing the device in piping 12
Aligning the cable entry 13
Special installation instructions 13

Environment 14
Ambient temperature range 14
Storage temperature 15
Humidity 15
Operating height 15
Climate class 15
Degree of protection 15
Vibration resistance 15
Pollution degree 15
Electromagnetic compatibility (EMC) 15

Process 16
Process temperature range 16
Thermal shock 16
Process pressure range 16
Test pressure 16
Medium density 16
Viscosity 17
Pressure tightness 17
Solids contents 17

Mechanical construction 17
Design, dimensions 17
Coating material and layer thickness 22
Weight 23
Materials 23
Process connections 24

Operability 25
Operation concept 25
Local operation 26

Certificates and approvals 26
CE mark 26
Ex approval 26
Overfill protection system 26
Functional safety 26
Marine approvals 26
CRN approval 27
Pressure equipment with permitted pressure less than 200 bar, no pressure-bearing volume 27
Process seal as per ANSI/ISA 12.27.01 27

Ordering information 27
Service 27
TAG 27

Accessories 28
Weather protection cover PA6 (aluminum housing (F13, F17) and 316L (F27)) 28
Weather protection cover PBT (plastic housing (F16)) 28
M12 socket 29

Documentation 29
Standard documentation 29
Supplementary device-dependent documentation 29

About this document

Safety symbols

DANGER
This symbol alerts you to a dangerous situation. Failure to avoid this situation will result in serious or fatal injury.

WARNING
This symbol alerts you to a potentially dangerous situation. Failure to avoid this situation can result in serious or fatal injury.

CAUTION
This symbol alerts you to a potentially dangerous situation. Failure to avoid this situation can result in minor or medium injury.

NOTICE
This symbol alerts you to a potentially harmful situation. Failure to avoid this situation can result in damage to the product or something in its vicinity.

Electrical symbols

⏚ Ground connection
Grounded clamp, which is grounded via a grounding system.

⊜ Protective earth (PE)
Ground terminals, which must be grounded prior to establishing any other connections. The ground terminals are located on the inside and outside of the device.

Symbols for certain types of Information

✓ Permitted
Procedures, processes or actions that are permitted.

✗ Forbidden
Procedures, processes or actions that are forbidden.

Tip
Indicates additional information

Reference to documentation

Reference to another section

1., 2., 3. Series of steps

Symbols in graphics

A, B, C ... View

1, 2, 3 ... Item numbers

Hazardous area

Safe area (non-hazardous area)

Graphic conventions

- Installation, explosion and electrical connection drawings are presented in simplified format
- Devices, assemblies, components and dimensional drawings are presented in reduced-line format
- Dimensional drawings are not to-scale representations; the dimensions indicated are rounded off to 2 decimal places
- Unless otherwise described, flanges are presented with sealing surface form EN 1091-1, B2; ASME B16.5, RF; JIS B2220, RF

Function and system design

Measuring principle

The sensor's vibrating fork vibrates at its natural frequency. As soon as the liquid covers the vibrating fork, the oscillation frequency decreases. The change in frequency causes the level switch to switch.

Point level measurement

Maximum or minimum detection for liquids in tanks or pipes in all industries. Suitable for leakage monitoring, pump dry-running protection or overfill prevention, for example.

Specific versions are suitable for use in hazardous areas.

The level switch differentiates between the "covered" and "not covered" conditions.

Depending on the MIN (minimum detection) or MAX (maximum detection) modes, there are two possibilities in each case: OK status and demand mode.

OK status
- In MIN mode, the vibrating fork is covered, e.g. pump dry-run protection
- In MAX mode, the vibrating fork is not covered, e.g. overfill protection

Demand mode
- In MIN mode, the vibrating fork is not covered, e.g. pump dry-run protection
- In MAX mode, the vibrating fork is covered, e.g. overfill protection system

Measuring system

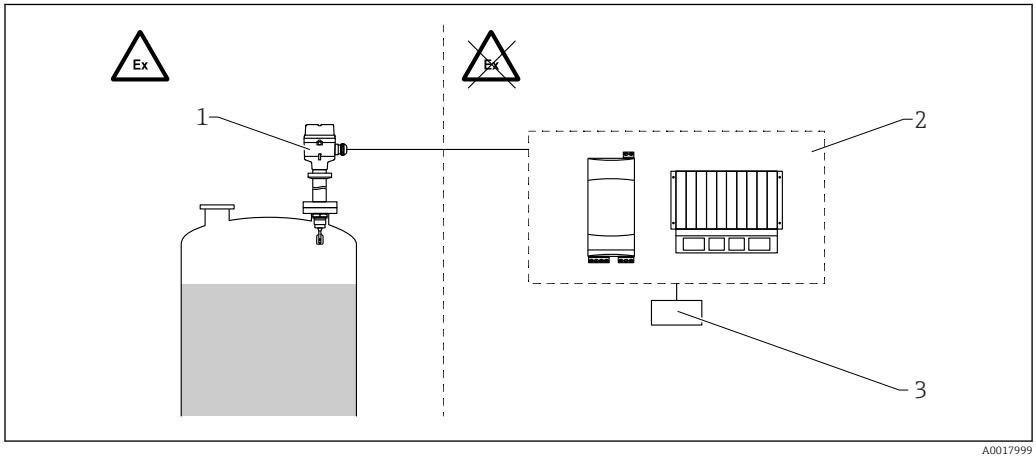

1 Example of a measuring system

1 Device with electronic insert FEL85 (4-20 mA)
2 Separate switch unit, e.g. Nivotester FailSafe FTL825, PLC, safety PLC
3 Actuator

The Nivotester FailSafe FTL825 supplies direct current to the device via a two-wire cable and receives a current of 4 to 20 mA. The switch status is interpreted via the current value. The intrinsically safe signal inputs of the Nivotester FailSafe FTL825 level switch are galvanically isolated from the mains and the output.

Dependability

IT security

The manufacturer warranty is valid only if the product is installed and used as described in the Operating Instructions. The product is equipped with security mechanisms to protect it against any inadvertent changes to the settings.

IT security measures, which provide additional protection for the product and associated data transfer, must be implemented by the operators themselves in line with their security standards.

Input

Measured variable

The point level signal is triggered according to the operating mode (minimum or maximum detection) when the level exceeds or falls below the relevant point level.

Measuring range

Depends on the installation location and the pipe extension ordered

Maximum sensor length: 3 m (10 ft)

Output

Output signal

Electronic insert FEL85

2-wire 4-20 mA
- For connecting to the separate Nivotester FailSafe FTL825 switching unit, a programmable logic controller (PLC), a safety-related PLC or 4-20 mA AI modules in accordance with EN 61131-2
- Output signal jump from high to low current when the point level is reached:
  - Minimum detection: from 18.5 mA to 9.0 mA
  - Maximum detection: from 13.5 mA to 6.0 mA
- A permanent LIVE signal (0.25 Hz, ±0.5 mA amplitude) is superimposed on the output signal in the OK status.

Signal on alarm

Error current in accordance with NAMUR NE43
Output current < 3.6 mA in the following cases:
- Function check: End proof test
- Out of specification: Correct density setting
- Maintenance required: Clean sensor
- Failure: Replace electronic insert
- Failure: Replace device

Load

R = (U - 12 V / 22 mA)

U = Supply voltage range: DC 12 to 30 V

Ex connection data

See safety instructions (XA): All data relating to explosion protection are provided in separate Ex documentation and are available from the Downloads area of the Endress+Hauser website. The Ex documentation is supplied as standard with all devices approved for use in explosion hazardous areas.

Galvanic isolation

Provide between the sensor and the power supply

Switch output

Switching delay time

The switching delay time is:
- Approx. 0.5 s ± 0.2 s when vibrating fork is covered
- Approx. 1.0 s ± 0.2 s when vibrating fork is free
- Dwell time: at least 0.3 s

Electrical connection

Terminal assignment

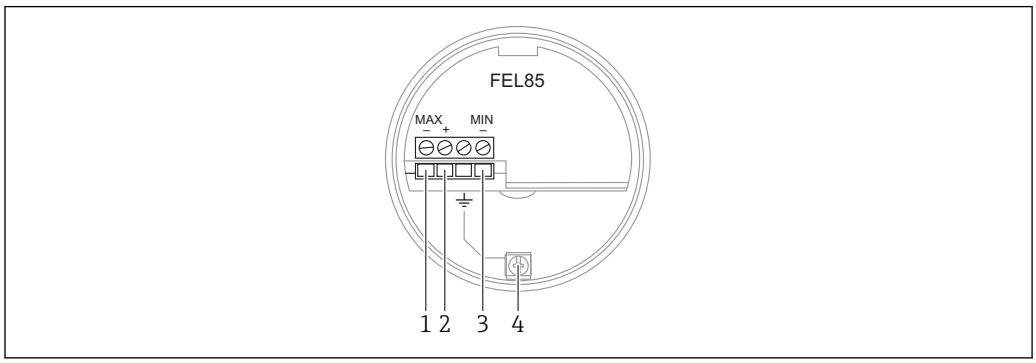

2 *Connection terminals and ground terminal in the connection compartment*

1 *Negative terminal for maximum detection*
2 *Positive terminal*
3 *Negative terminal for minimum detection*
4 *Internal ground terminal*

Available device plugs

Connection via M12 plug connector

For maximum detection mode of operation with an M12 plug connector, it is not necessary to open the housing for connection purposes.

M12 plug

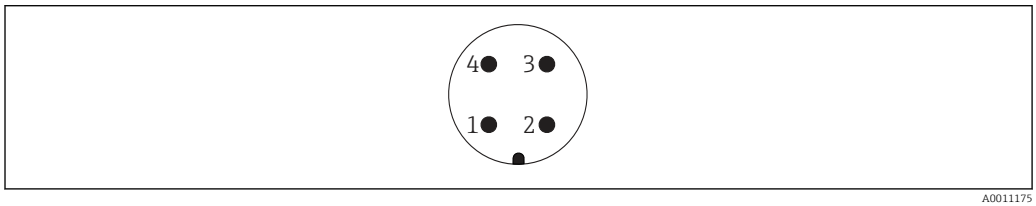

3 *M12 plug, pin assignment*

1 *Signal +*
2 *Not used*
3 *Signal –*
4 *Ground*

FEL85 Maximum detection mode of operation (factory setting)

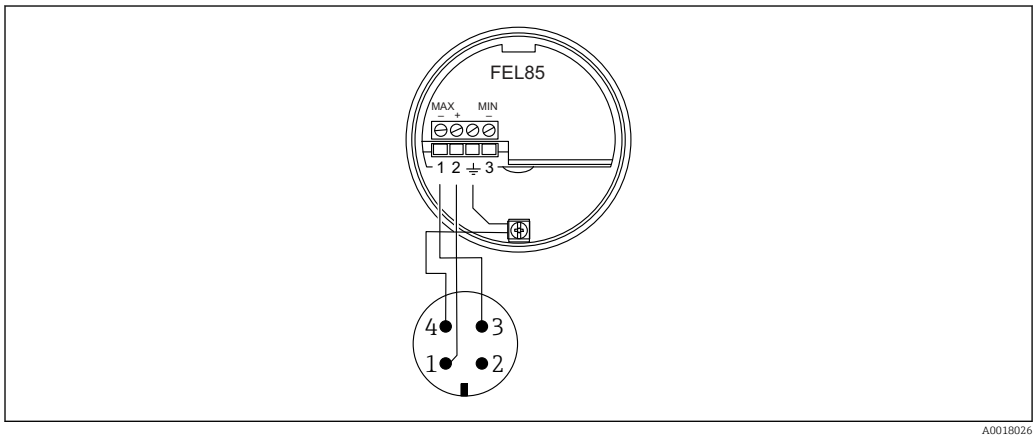

4 *Terminal assignment with M12 connector, maximum detection mode of operation*

FEL85 Minimum detection mode of operation

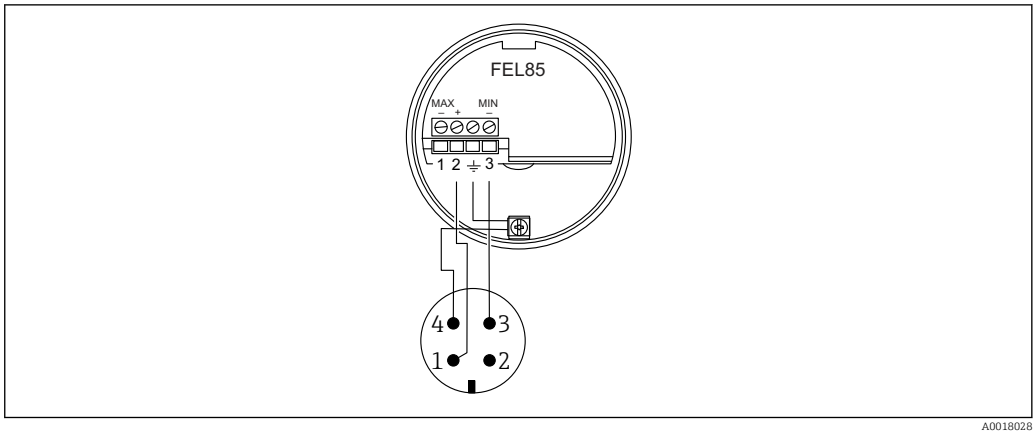

5 Terminal assignment with M12 connector, minimum detection mode of operation

Supply voltage

- Nominal supply voltage: DC 24 V
- Supply voltage range: DC 12 to 30 V

Power consumption

< 660 mW

Reverse polarity protection

Available

Electrical connection

The mode of operation (minimum detection or maximum detection) is selected via the connection coding on the electronic insert.

Two-wire connection for connecting to:
- Nivotester FailSafe FTL825 (See TI01027F for further information on the FTL825)
- PLC (programmable logic controller)
- Safety PLC
- 4-20 mA AI module according to EN 61131-2

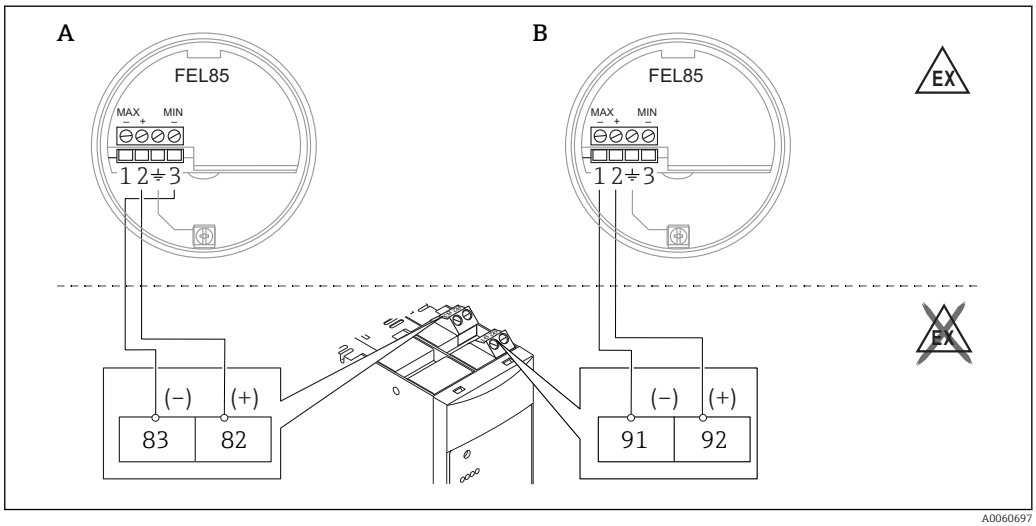

6 Connecting to Nivotester FailSafe FTL825

A Minimum detection
B Maximum detection

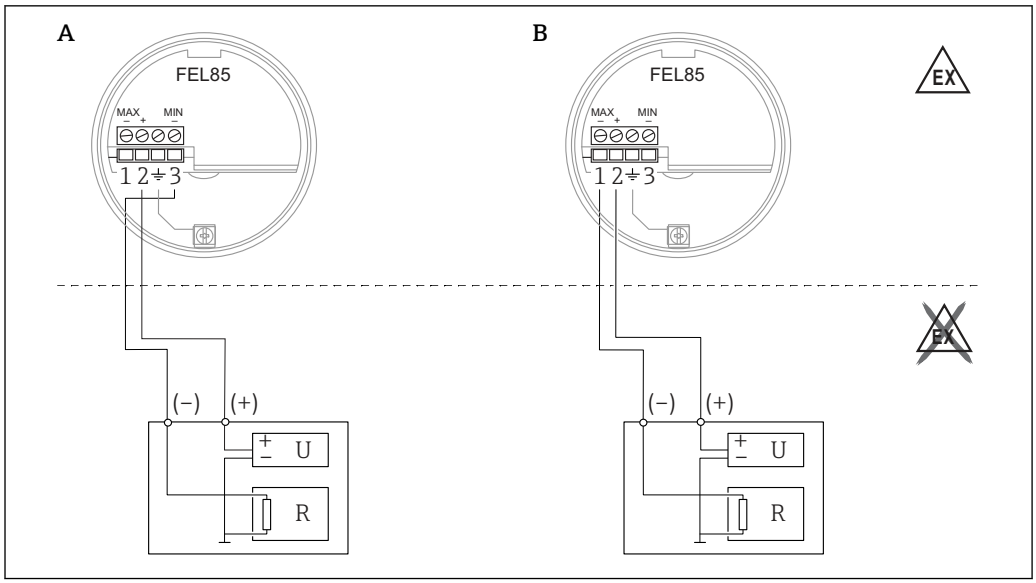

7 *Connecting to a PLC*

A Minimum detection
B Maximum detection

Potential equalization

WARNING

Ignitable sparks or excessively high surface temperatures.
Explosion hazard!

► Please refer to the separate documentation on applications in hazardous areas for the safety instructions.

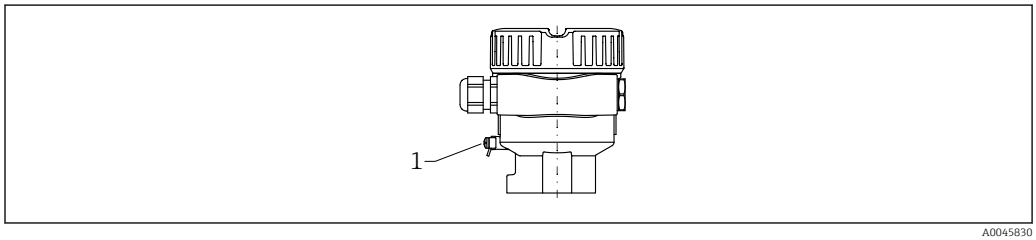

1 Ground terminal for connecting the potential matching line (example)

If necessary, the potential matching line can be connected to the external ground terminal of the transmitter before the device is connected.

For optimum electromagnetic compatibility:
- Potential matching line as short as possible
- Observe a cross-section of at least 2.5 mm² (14 AWG)

Cable specifications

- Electronic insert: cross-section max. 2.5 mm² (14 AWG)
- Maximum cable length: 1000 m (3281 ft)
- Maximum cable resistance: 25 Ω per core
- Maximum cable capacitance 100 nF
- Protective earth in housing: cross-section max. 2.5 mm² (14 AWG)
- Equipotential bonding connection on housing exterior: cross-section max. 4 mm² (12 AWG)

Overvoltage protection

Overvoltage category II

Performance characteristics

Reference operating conditions

- Ambient temperature: 23 °C (73 °F) ±5 °C (9 °F)
- Process temperature: 23 °C (73 °F)
- Humidity φ = constant, in the range: 5 to 80 % rF ± 5 %
- Medium density (water): 1 g/cm³ (62.4 lb/ft³)
- Medium viscosity: 1 mPa·s
- Atmospheric pressure p_A = constant, in the range: 860 to 1 060 mbar (12.47 to 15.37 psi)
- Process pressure: 1 bar (15 psi)
- Sensor installation: vertically from above
- Density selector switch, low: 0.7 g/cm³ (43.7 lb/ft³)
- Density selector switch, high: > 2.0 g/cm³ (124.9 lb/ft³)
- Mode of operation: Maximum detection

Taking the switch point into consideration

Minimum distance between the tuning fork and the tank wall or pipe wall: 10 mm (0.39 in)

Switch point at reference operating conditions

Plastic-coated vibrating fork (ECTFE, PFA)

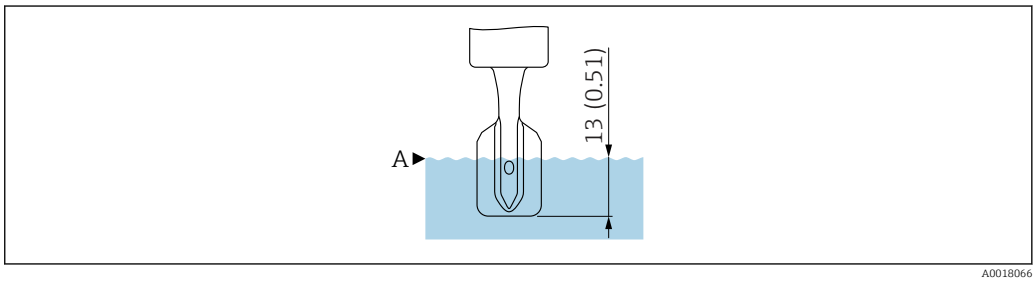

8 Switch point at reference operating conditions, plastic-coated vibrating fork (ECTFE, PFA), dimensions without coating thickness. Unit of measurement mm (in)

A Switch point

Enamel-coated vibrating fork

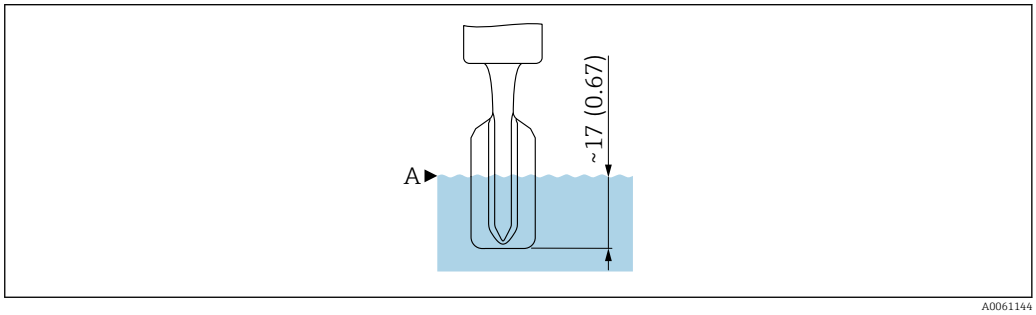

9 Switch point at reference operating conditions, enamel-coated vibrating fork, dimensions without coating thickness. Unit of measurement mm (in)

A Switch point

Switch point outside reference operating conditions

Outside the reference operating conditions, the switch point is in the area of the vibrating fork.

Maximum measurement error

At reference operating conditions: max. ± 1 mm (0.04 in) at switch point

Hysteresis

- Approx. 2 mm (0.08 in) with ECTFE and PFA coating
- Approx. 2.5 mm (0.1 in) with enamel coating

Repeatability	0.1 mm (0.004 in)
Influence of process temperature	▪ ECTFE coating: The switch point moves between 1.4 to −2.8 mm (0.06 to −0.11 in) in the temperature range of −50 to 120 °C (−58 to 250 °F) ▪ PFA coating: The switch point moves between 1.4 to −2.8 mm (0.06 to −0.11 in) in the temperature range of −50 to 150 °C (−58 to 300 °F) ▪ Enamel coating: The switch point moves between 0.6 to −1.5 mm (0.02 to −0.06 in) in the temperature range of −50 to 150 °C (−58 to 300 °F)
Influence of process medium density	The switch point moves between 4.8 to −3.5 mm (0.19 to −0.14 in) in the pressure range of 0.5 to 1.5 g/cm³ (31.2 to 93.6 lb/ft³)
Influence of process pressure	▪ The switch point moves between 0 to −2.5 mm (0 to −0.1 in) in the pressure range of −1 to 64 bar (−14.5 to 928 psi) ▪ The switch point moves between 0 to −3.9 mm (0 to −0.15 in) in the pressure range of −1 to 100 bar (−14.5 to 1 450 psi)

Installation

Mounting location, orientation

Mounting instructions
- Any orientation for version with a pipe length up to approx. 500 mm (19.7 in)
- Vertical orientation from above for device with long pipe
- Minimum distance between the vibrating fork and the tank wall or pipe wall: 10 mm (0.39 in)

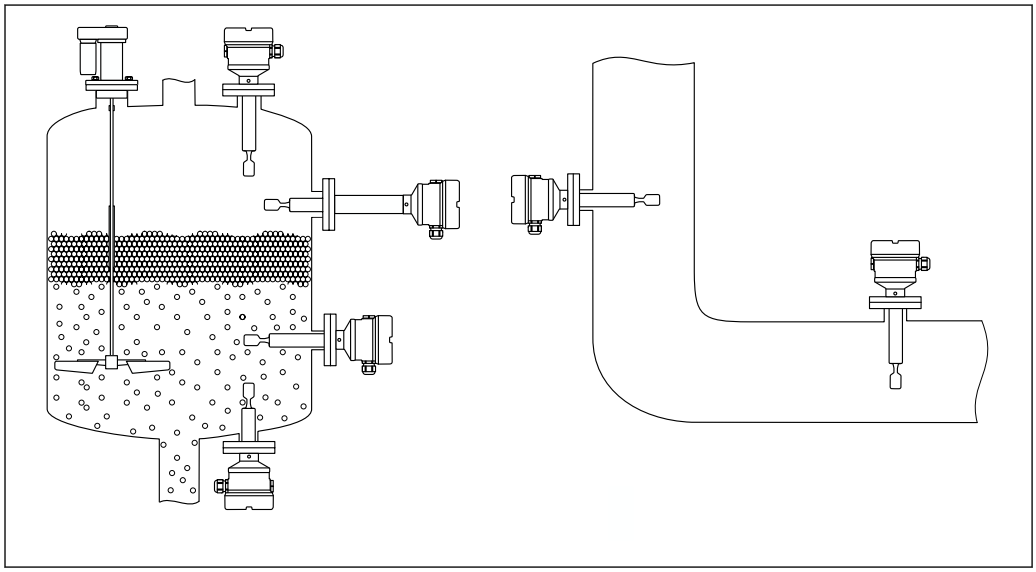

A0042153

10 Installation examples for a vessel, tank or pipe

Installation instructions

Viscosity depending on the mode of operation

With regard to the viscosity of the medium, the restrictions for applications involved in safety-related operation must be observed, as specified in the Functional Safety Manual.

Align the vibrating fork so that the narrow sides of the vibrating fork point upwards and downwards, allowing the liquid to drain off properly.

Maximum detection: ≤ 10 000 mPa·s

Minimum detection: ≤ 350 mPa·s

Minimum detection, coating 230 to 280 °C (450 to 536 °F): ≤ 100 mPa·s

Low viscosity

It is permitted to position the tuning fork within the installation socket.

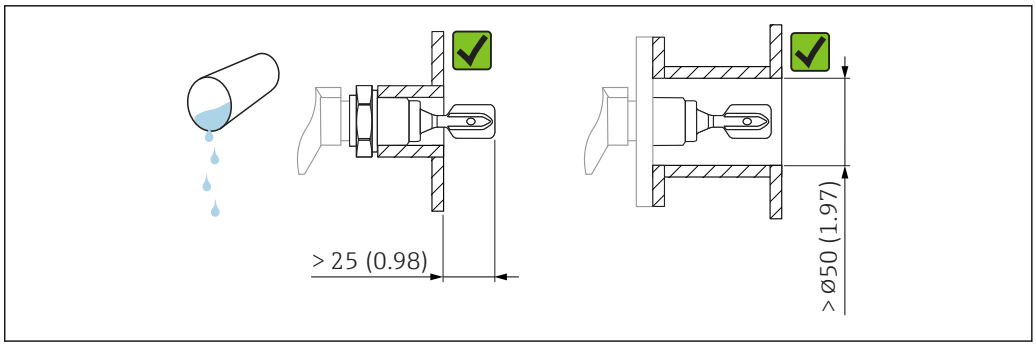

11 *Example of installation for low-viscosity liquids. Unit of measurement mm (in)*

High viscosity

NOTICE

Highly viscous liquids may cause switching delays.

- ▶ Make sure that the liquid can run off the tuning fork easily.
- ▶ Deburr the socket surface.

The tuning fork must be located outside the installation socket!

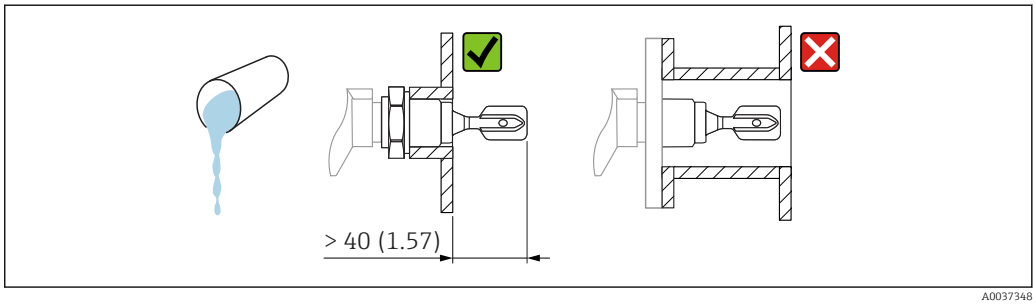

12 *Installation example for a highly viscous liquid. Unit of measurement mm (in)*

Preventing buildup

NOTICE

Buildup formation can restrict applications during safety-related operation.

- ▶ Refer to the Functional Safety Manual.

Ensure that there is sufficient distance between the expected buildup on the tank wall and the fork.

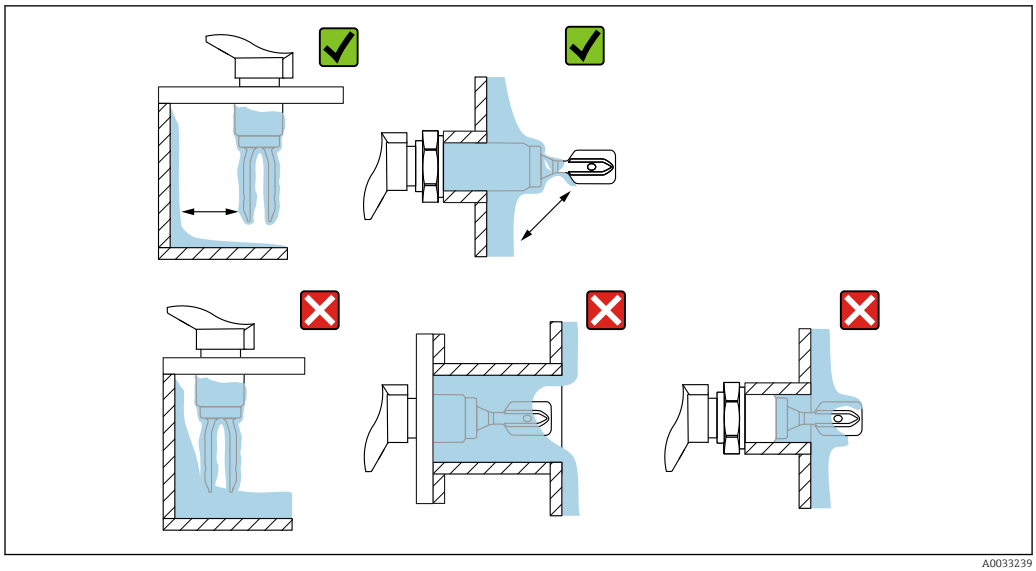

13 *Installation examples for a highly viscous process medium*

Take clearance into consideration

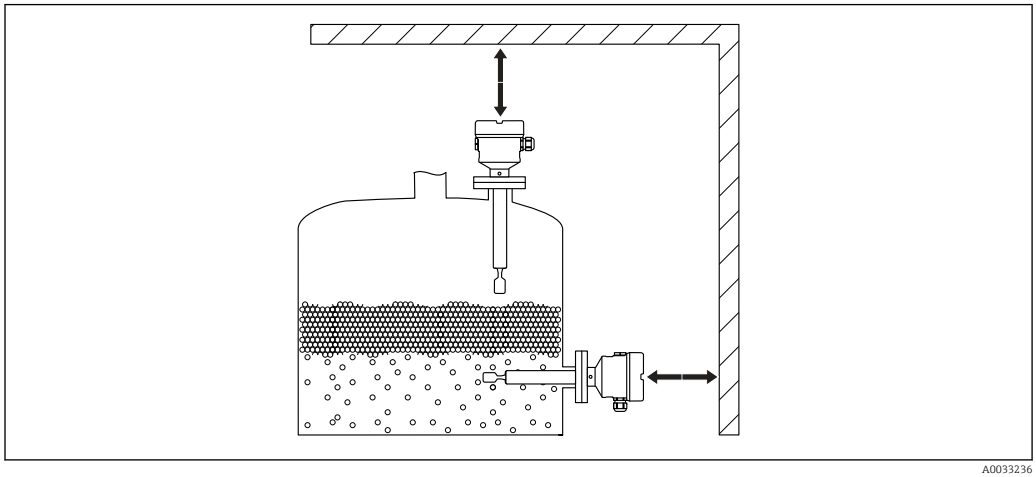

14 *Take clearance outside the tank into consideration*

Aligning the tuning fork using the marking

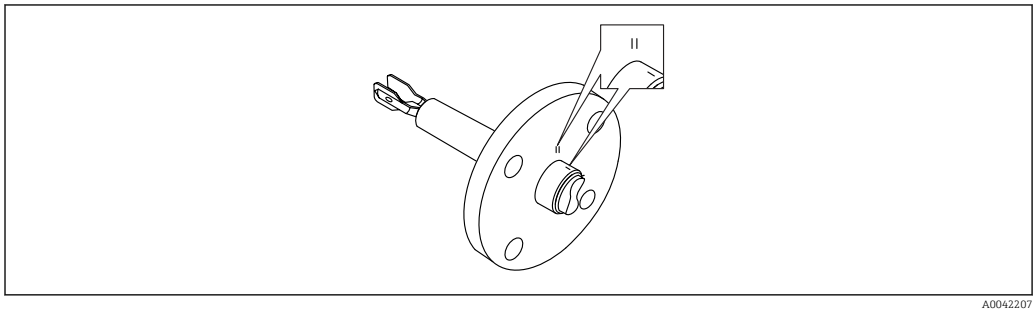

15 *Position of the tuning fork when installed horizontally in the vessel using the marking*

Installing the device in piping

- Flow velocity up to 5 m/s with viscosity 1 mPa·s and density 1 g/cm³ (62.4 lb/ft³).
  Check for correct functioning in the event of other process medium conditions.
- If the vibrating fork is correctly aligned and the marking is pointing in the flow direction, the flow will not be significantly obstructed.
- The marking is visible when installed.
- Pipe diameter: ≥ 50 mm (2 in)

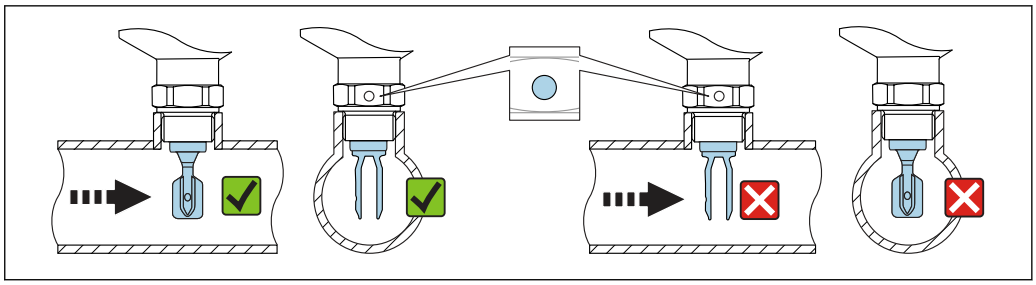

A0034851

16 *Installation in pipes (take fork position and marking into consideration)*

Aligning the cable entry

All housings can be aligned. Forming a drip loop on the cable prevents moisture from entering the housing.

Housing with locking screw (316L (F27) and 316L hygienic (F15))

The housing can be aligned using a locking screw.

Aligning the housing:

1. Open the housing cover and loosen the locking screw (3-4 rotations).
2. Rotate the housing into the correct position.
3. Tighten the locking screw with maximum 0.9 Nm and close the housing cover.

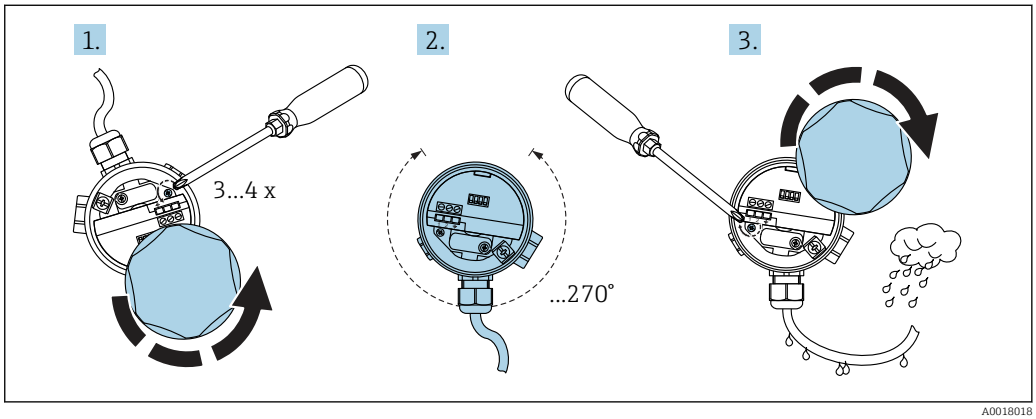

A0018018

17 *Housing with locking screw; form a drip loop on the cable*

Housing without locking screw (plastic (F16), aluminum (F13, F17, T13))

The housing can be rotated up to 300 °.

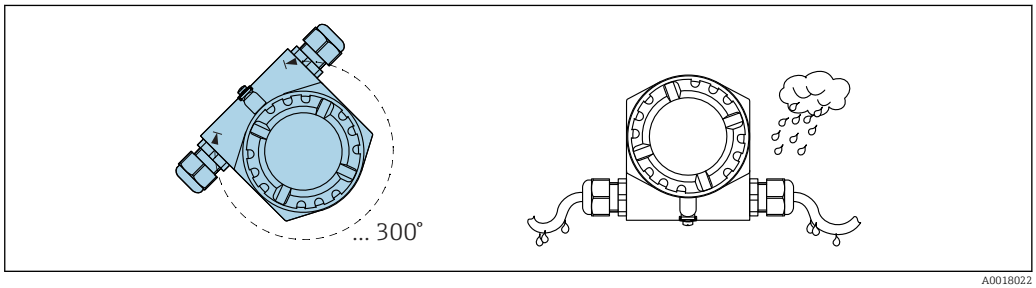

A0018022

18 *Housing without set screw; form a drip loop on the cable*

Special installation instructions

Vessel with heat insulation

If process temperatures are high, the device should be included in the vessel insulation system to prevent the electronics from heating as a result of thermal radiation or convection. The insulation in this case should not be higher than the neck of the device.

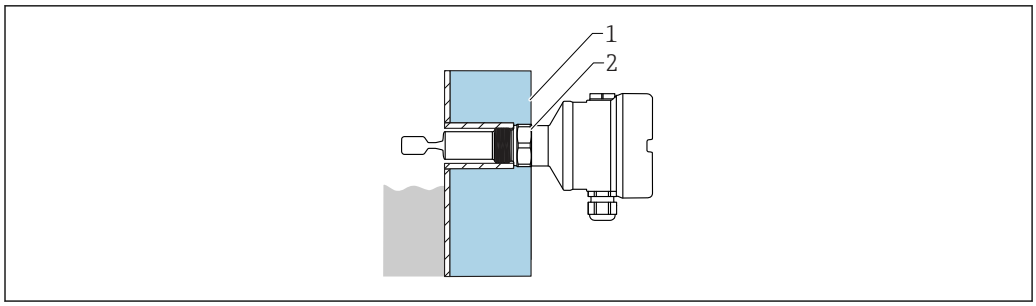

19 *Example of a vessel with heat insulation*

1 Vessel insulation
2 Insulation (up to the housing neck max.)

Support the device

NOTICE

If the device is supported incorrectly, shocks and vibrations can damage the coated surface.

- ► Only use a support in conjunction with ECTFE or PFA plastic coating.
- ► Use suitable supports only.

Support the device in the event of severe dynamic load. Maximum lateral loading capacity of the pipe extensions and sensors: 75 Nm (55 lbf ft).

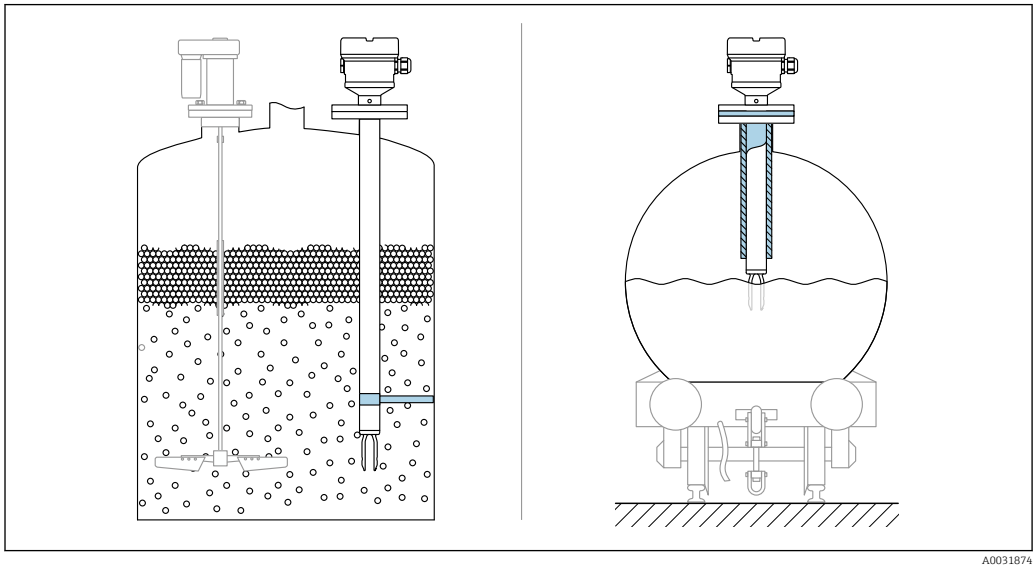

20 *Examples of support in the event of dynamic load*

Marine approval: In the case of pipe extensions or sensors longer than 1 600 mm (63 in), a support is needed at least every 1 600 mm (63 in).

Environment

Ambient temperature range

−40 to 70 °C (−40 to 158 °F)

Optionally available to order:
−50 °C (−58 °F) with restricted operating life and performance

The difference in temperature between the process and ambient temperature (T_P - T_a) of the flange must not exceed 60 °C (108 °F) when coated with ECTFE and PFA. The flange must be incorporated into the vessel insulation if necessary.

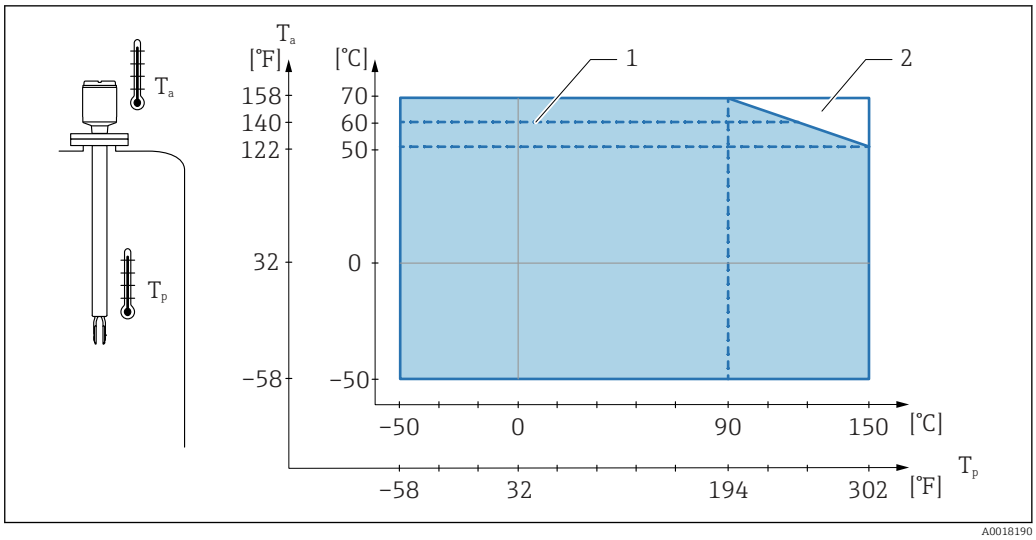

21 *Permitted ambient temperature T_a at the housing as a function of the process temperature T_p in the vessel; maximum process temperature 150 °C (302 °F)*

1 Maximum ambient temperature in hazardous area (T6) and intrinsically safe power supply
2 Additional usable temperature range for devices with temperature spacer or pressure-tight feedthrough

Outdoor operation in strong sunlight:
- Mount the device in a shaded location
- Avoid direct sunlight, particularly in warmer climatic regions
- Use a protective cover, which can be ordered as an accessory

Storage temperature

−50 to 80 °C (−58 to 176 °F)

Humidity

Operation up to 100 %. Do not open in a condensing atmosphere.

Operating height

As per IEC 61010-1 Ed.3:
Up to 2 000 m (6 500 ft) above sea level

Climate class

As per IEC 60068-2-38 test Z/AD

Degree of protection

Tested in accordance with EN 60529 and NEMA 250

Housing
- Plastic (F16):
  IP66/67/NEMA Type 4X enclosure
- 316L, hygienic (F15):
  IP66/67/NEMA Type 4X enclosure
- 316L (F27):
  IP66/68/NEMA Type 4X/6P enclosure
- Aluminum (F17):
  IP66/67/NEMA Type 4X enclosure
- Aluminum (F13):
  IP66/68/NEMA Type 4X/6P enclosure
- Aluminum (T13) with separate terminal compartment (Ex d):
  IP66/68/NEMA Type 4X/6P enclosure

Vibration resistance

As per IEC 60068-2-64, load class 1 $(m/s^2)^2/Hz$, 3 x 100 minutes

Pollution degree

Pollution degree 2

Electromagnetic compatibility (EMC)
- Electromagnetic compatibility as per EN 61326 series and NAMUR recommendation EMC (NE21)
- 1 % span ≤ 160 µA

For more details, refer to the EU Declaration of Conformity.

Process

Process temperature range

- ECTFE coating: −50 to 120 °C (−58 to 248 °F)
- PFA coating: −50 to 150 °C (−58 to 302 °F)
- Enamel coating: −50 to 150 °C (−58 to 302 °F)

Pay attention to pressure and temperature dependencies.

Liquid gas application
−50 to 60 °C (−58 to 140 °F)

Thermal shock

≤ 120 K/s

Process pressure range

- ECTFE coating: −1 to 40 bar (−14.5 to 580 psi)
- PFA coating: −1 to 40 bar (−14.5 to 580 psi)
- ECTFE coating: −1 to 25 bar (−14.5 to 362.5 psi)

The maximum pressure for the device depends on the lowest-rated element with regard to pressure.

Components are: process connection, optional mounting parts, or accessories.

WARNING

Incorrect design or use of the device may lead to bursting parts!
This may result in severe, possibly irreversible injury to persons and environmental hazards.

- ▶ Only operate the device within the specified limits for the components!
- ▶ MWP (maximum working pressure): The maximum working pressure is specified on the nameplate. This value refers to a reference temperature of +20 °C (+68 °F) and may be applied to the device for an unlimited time. Observe the temperature dependency of the maximum working pressure. For higher temperatures, refer to the following standards for the permitted pressure values for flanges:EN 1092-1 (materials 1.4435 and 1.4404 are identical with regard to their stability/temperature property and are grouped together in under 13E0 in EN 1092-1 Tab. 18; the chemical composition of the two materials can be identical), ASME B 16.5a, JIS B 2220 (the latest version of the standard applies in each case).
- ▶ The Pressure Equipment Directive (2014/68/EU) uses the abbreviation "PS". The abbreviation "PS" corresponds to the maximum working pressure of the device.
- ▶ MWP data that deviate from this are provided in the relevant sections of the Technical Information.

Test pressure

Process pressure P_N = 25 bar (363 psi)

- Test pressure = 38 bar (551 psi) = 1.5 · P_N
- Burst pressure > 400 bar (5 800 psi)

Process pressure P_N = 40 bar (580 psi)

- Test pressure = 60 bar (870 psi) = 1.5 · P_N
- Burst pressure > 400 bar (5 800 psi)

The device function is limited during the pressure test.

Mechanical integrity is guaranteed up to 1.5 times the process nominal pressure PN.

Medium density

Set the density at the two rotary switches ("Low" density and "High" density).

Only the density setting combinations indicated below are permitted.

Maximum detection

- Combination 1: Liquid gas
  - Density ρ_{Low}: 0.4 g/cm³ (25.0 lb/ft³)
  - Density ρ_{High}: 2.0 g/cm³ (124.9 lb/ft³)
- Combination 2: Other liquids
  - Density ρ_{Low}: 0.7 g/cm³ (43.7 lb/ft³)
  - Density ρ_{High}: >2.0 g/cm³ (124.9 lb/ft³)

Minimum detection

- Combination 1: Liquid gas
  - Density ρ_{Low}: 0.4 g/cm³ (25.0 lb/ft³)
  - Density ρ_{High}: 0.7 g/cm³ (43.7 lb/ft³)
- Combination 2, e.g. alcohol
  - Density ρ_{Low}: 0.6 g/cm³ (37.5 lb/ft³)
  - Density ρ_{High}: 0.9 g/cm³ (56.2 lb/ft³)
- Combination 3, e.g. water
  - Density ρ_{Low}: 0.7 g/cm³ (43.7 lb/ft³)
  - Density ρ_{High}: 1.2 g/cm³ (74.9 lb/ft³)
- Combination 4, e.g. acid
  - Density ρ_{Low}: 0.9 g/cm³ (56.2 lb/ft³)
  - Density ρ_{High}: 2.0 g/cm³ (124.9 lb/ft³)

Viscosity

- Maximum detection: ≤ 10 000 mPa·s
- Minimum detection: ≤ 100 mPa·s

Pressure tightness

Up to vacuum

In vacuum evaporation plants, select the 0.4 g/cm³ (25.0 lb/ft³)/ density setting.

Solids contents

Ø ≤ 5 mm (0.2 in)

Mechanical construction

Design, dimensions

The following dimensions are rounded values. As a result, there may be deviations from the specifications in the Product Configurator at www.endress.com.

To view CAD data:

1. Enter www.endress.com in your web browser
2. Search for the device
3. Select the **Configuration** button
4. Configure the device
5. Select the **CAD drawings** button

Device height

The device height consists of the following components:
- Housing including cover
- Temperature spacer with pressure-tight feedthrough (second line of defense), optional
- Short pipe version or pipe extension
- Process connection

The individual heights of the components can be found in the following sections:
- Determine the height of the device and add the individual heights
- Take the installation clearance into consideration (space that is needed to install the device)

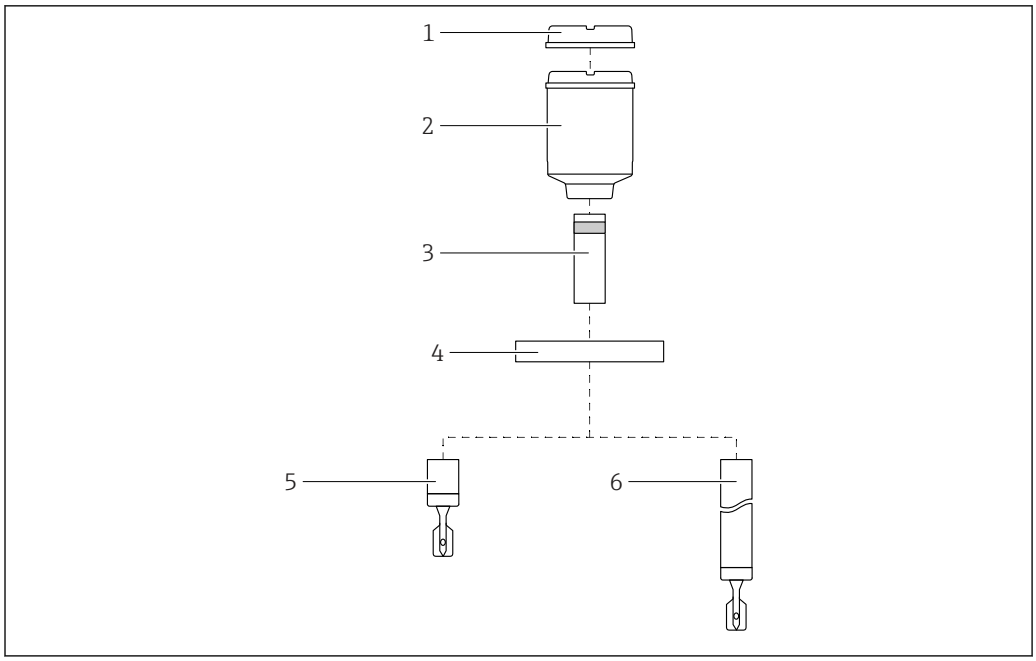

22 Components for determining the height of the device

1 *Cover with sight glass (optional)*
2 *Housing with cover*
3 *Temperature spacer with pressure-tight feedthrough, optional*
4 *Process connection flange*
5 *Probe design: short pipe version with vibrating fork*
6 *Probe design: pipe extension with vibrating fork*

Housing and cover

Plastic housing (F16)

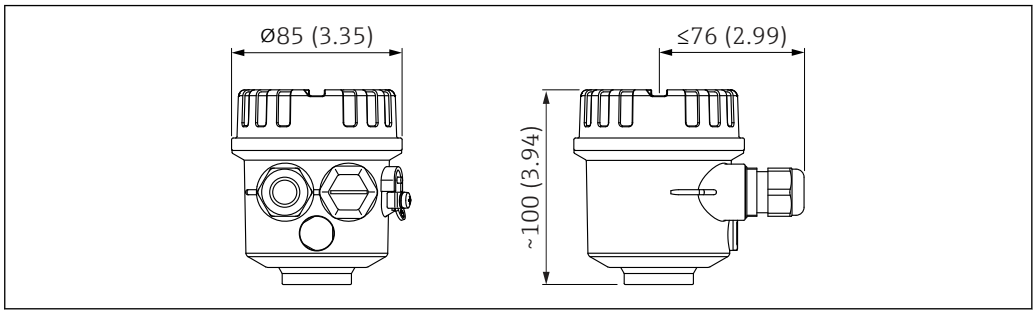

23 Dimensions of plastic housing. Unit of measurement mm (in)

316L housing, hygienic (F15)

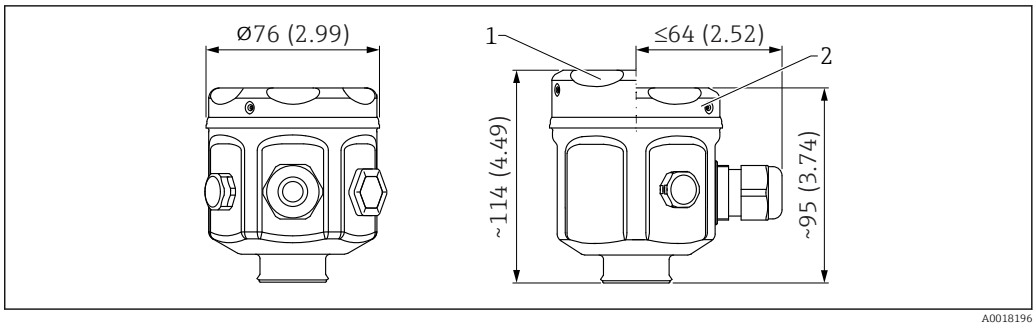

24 Dimensions of 316L housing, hygienic. Unit of measurement mm (in)

1 Cover with sight glass (optional)
2 Cover without sight glass

Aluminum housing (F17)

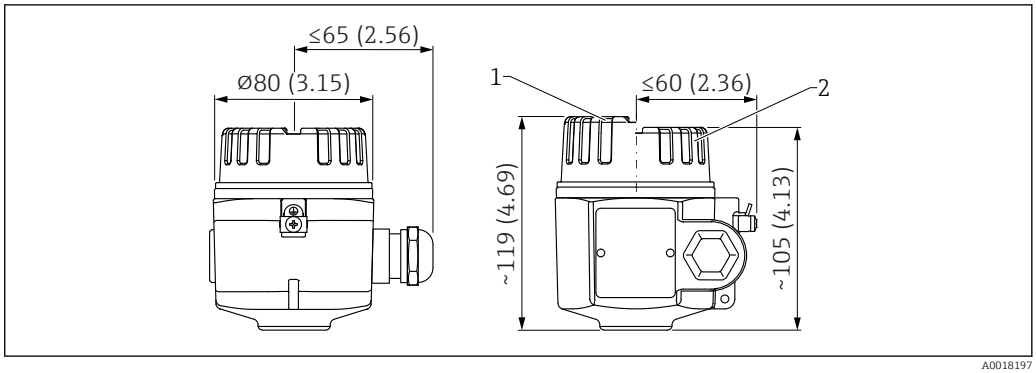

25 Dimensions of aluminum housing. Unit of measurement mm (in)

1 Cover with sight glass (optional)
2 Cover without sight glass

Aluminum housing (F13)

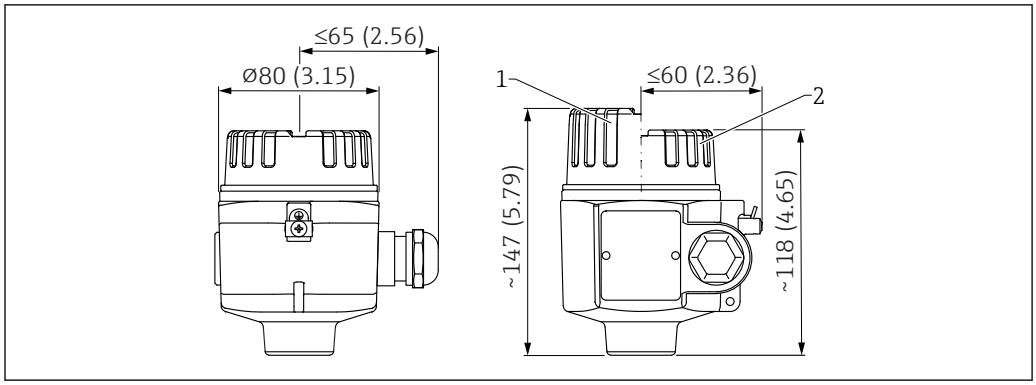

26 Dimensions of aluminum housing, with adapter screwed onto sensor. Unit of measurement mm (in)

1 Cover with sight glass (optional)
2 Cover without sight glass

316L housing (F27)

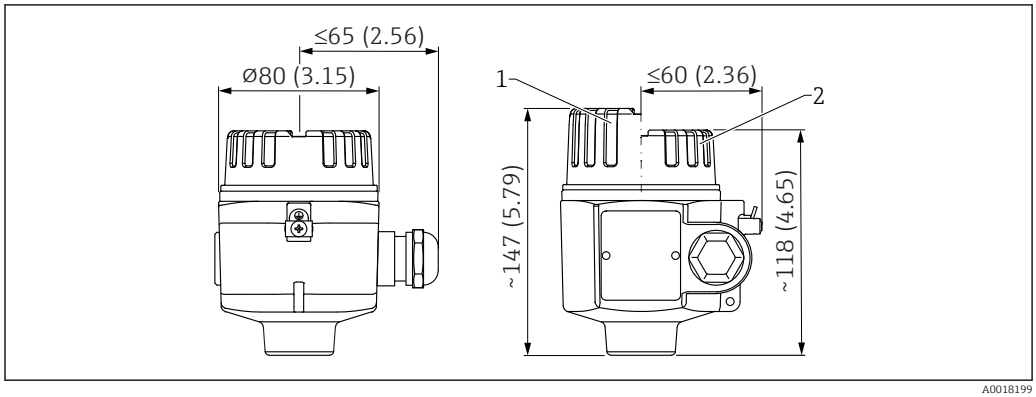

27 Dimensions of 316L housing, with adapter screwed onto sensor. Unit of measurement mm (in)

1 Cover with sight glass (optional)
2 Cover without sight glass

Aluminum housing (T13) with separate terminal compartment

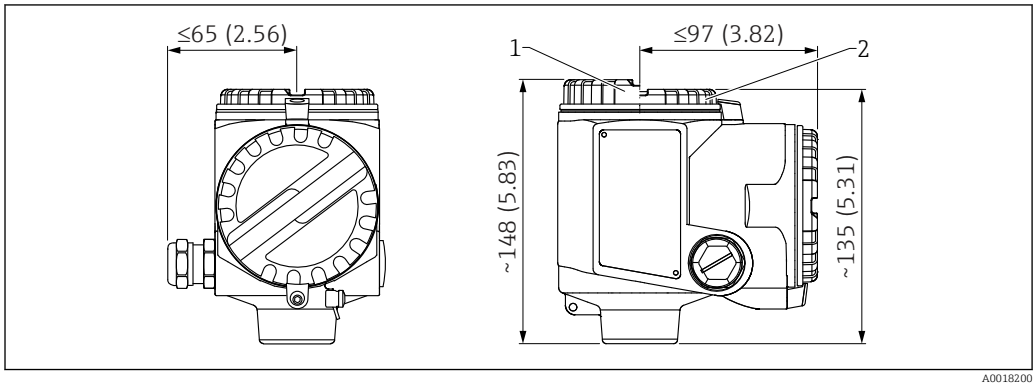

28 Dimensions of aluminum housing with separate terminal compartment. Unit of measurement mm (in)

1 Cover with sight glass (optional)
2 Cover without sight glass

Ground terminal

- Ground terminal inside the housing, max. conductor cross-section 2.5 mm^2 (14 AWG)
- Ground terminal outside on the housing, max. conductor cross-section 4 mm^2 (12 AWG)

Cable glands

Cable diameter:
- Plastic: Ø5 to 10 mm (0.2 to 0.38 in)
- Nickel-plated brass: Ø7 to 10.5 mm (0.28 to 0.41 in)
- Stainless steel: Ø7 to 12 mm (0.28 to 0.47 in)

Temperature spacer, pressure-tight feedthrough (optional)

Temperature spacer:
- For bypassing any existing vessel insulation. Reduces the ambient temperature at the housing due to the additional distance to the process.
- Maximum temperature: ≤ 150 °C (300 °F)
- Product Configurator, order code for "Sensor design"

Pressure-tight feedthrough (second line of defense) incl. temperature spacer:
- Pressure-tight glass feedthrough sealed with an O-ring. Recommended if there is a risk of damage to the sensor, particularly in the case of dangerous media or where there is medium to high probability of condensate.
- Maximum temperature: ≤ 150 °C (300 °F)
- Product Configurator, order code for "Sensor design"

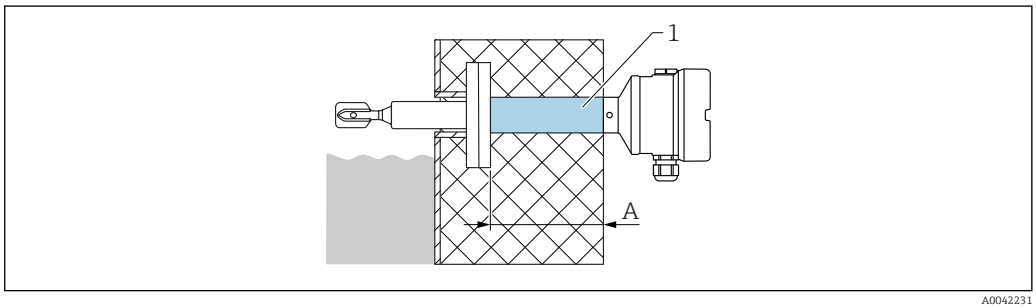

A0042231

1 Temperature spacer up to 150 °C (300 °F) (optionally with pressure-tight feedthrough) with maximum insulation length
A 140 mm (5.51 in)

Dimension A depends on the process connection selected and can therefore vary. For exact dimensions, information is available from the Endress+Hauser sales office.

Sensor lengths

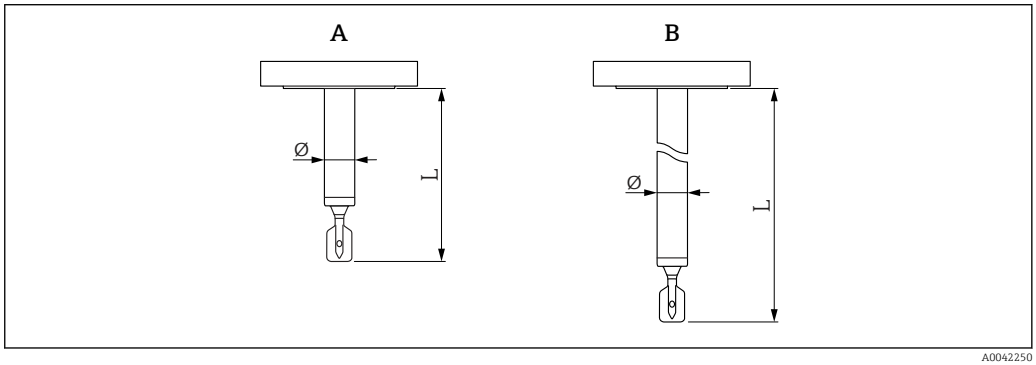

A0042250

29 Sensor length L. Unit of measurement mm (in)

A Short pipe version (L = 115 mm (4.53 in))
B Pipe extension (L = variable 148 to 3 000 mm (6 to 115 in))
L Sensor length
Ø Maximum diameter: depends on coating material

Tuning fork

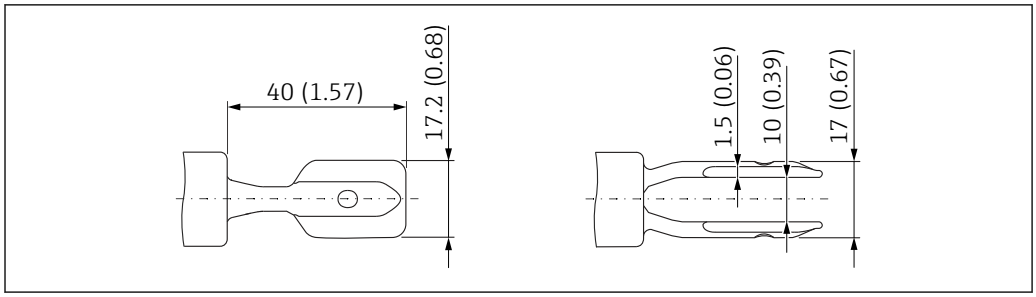

30 Tuning fork with plastic coating (ECTFE, PFA). Unit of measurement mm (in)

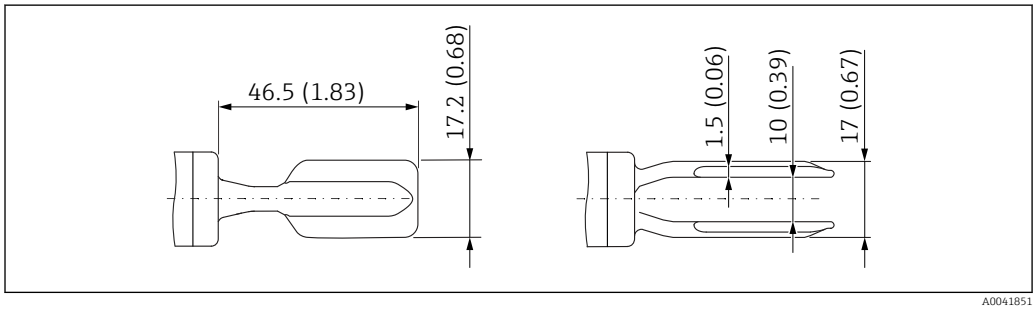

31 Tuning fork with enamel coating. Unit of measurement mm (in)

Coating material and layer thickness

The maximum diameter Ø depends on the coating material.

ECTFE
- Lower limit: 0.5 mm (0.02 in)
- Upper limit: 1.6 mm (0.06 in)
- Maximum diameter: Ø 24.6 mm (0.97 in)

PFA (Edlon™), PFA (RubyRed®), PFA (conductive)
- Lower limit: 0.45 mm (0.02 in)
- Upper limit: 1.6 mm (0.06 in)
- Maximum diameter: Ø 24.6 mm (0.97 in)

PFA (Edlon™): FDA-compliant material in accordance with 21 CFR Part 177.1550/2600

Enamel
- Lower limit: 0.4 mm (0.02 in)
- Upper limit: 0.8 mm (0.03 in)
- Maximum diameter: Ø 23 mm (0.91 in)

Properties and benefits of coatings

ECTFE (ethylene chlorotrifluoroethylene)
- Thermoplastic fluoropolymer coating
- Also known as HALAR®
- Very good chemical and corrosion resistance
- High abrasion performance
- Good non-stick properties
- Ideal for use in the chemicals industry

PFA (perfluoroalkoxy)
- Properties similar to PTFE (polytetrafluoroethylene) and FEP (perfluoroethylenepropylene)
- Also known as Teflon®-PFA
- Very good chemical and corrosion resistance
- High abrasion performance
- Good non-stick and sliding properties

- High temperature stability
- Ideal for use in the chemical and pharmaceutical industry
- Available as PFA (Edlon™), PFA (Ruby Red®) or also as PFA (conductive), specially developed for use in explosive atmospheres

PFA (Edlon™): FDA-compliant material in accordance with 21 CFR Part 177.1550/2600

Enamel
- Glass-like material
- Very good chemical and corrosion resistance
- Acid-resistant
- High temperature stability
- Dirt-repellent
- Low resistance to impact

Use of the selected coating material influences the approved IIB/IIC gas groups. Pay attention to the information in the safety documentation (XA).

Weight

Housing
- Plastic (F16): 0.1 kg (0.22 lb)
- Aluminum (F13): 0.5 kg (1.1 lb)
- 316L (F15): 0.2 kg (0.44 lb)
- Aluminum (F17): 0.5 kg (1.1 lb)
- 316L (F27): 1.3 kg (2.87 lb)
- Aluminum with separate terminal compartment (T13): 0.9 kg (1.98 lb)

Temperature spacer
0.6 kg (1.32 lb)

Pressure-tight feedthrough
0.7 kg (1.54 lb)

Pipe extension
- 1 000 mm: 0.9 kg (1.98 lb)
- 50 in: 1.15 kg (2.54 lb)

Process connection

See "Process connections" section

Protective cover, plastic
0.3 kg (0.66 lb)

Materials

No coating: temperature spacer, pressure-tight feedthrough

Materials in contact with process

Pipe extension
- With plastic coating: carrier material: 316L (1.4435 or 1.4404)
- With enamel coating: carrier material Alloy C4 (2.4610)

Vibrating fork
- With plastic coating: carrier material: 316L (1.4435 or 1.4404)
- With enamel coating: carrier material Alloy C4 (2.4610)

Flanges
- With plastic coating ECTFE, PFA (Edlon™) [1], PFA (RubyRed), PFA (conductive): carrier material: 316L (1.4435 or 1.4404)
- With enamel coating: carrier material: A516 Gr.60 (1.0487), (ASTMA 529)

1) FDA-compliant material in accordance with 21 CFR Part 177.1550/2600

Materials not in contact with process

- Seal between process connection and housing: EPDM
- Temperature spacer: Standard version: 316 L (1.4435)
- Pressure-tight feedthrough: 316 L (1.4435)
- Ground terminals on housing (exterior): 304 (1.4301)

Housing

Plastic housing F16:
- Housing: PBT-FR
- Cover: PBT-FR
- Transparent cover: PA12
- Cover seal: EPDM
- Glued nameplate: plastic film (PET)
- Pressure compensation filter: PBT-GF20

Stainless steel housing F15:
- Housing: 316L (1.4404)
- Cover seal: silicone/PTFE
- Cover clamp: 304 (1.4301)
- Pressure compensation filter: PBT-GF20, PA
- Nameplate labeling: directly on housing

Aluminum housing F17/F13:
- Housing: EN-AC-AlSi10Mg, plastic-coated
- Cover seal: EPDM
- Cover clamp: nickel-plated brass
- Pressure compensation filter: silicone
- Nameplate on housing (exterior): 304 (1.4301)

Stainless steel housing F27:
- Housing: 316L
- Cover seal: FVMQ (optional: EPDM seal available as spare part)
- Cover clamp: 316L
- Nameplate on housing (exterior): 304 (1.4301)

Aluminum housing T13:
- Housing: EN-AC-AlSi10Mg, plastic-coated
- Cover seal: EPDM
- Cover clamp: nickel-plated brass
- Nameplate on housing (exterior): 304 (1.4301)

Electrical connection

Cable gland versions:
- Coupling M20, plastic (PA)
- Coupling M20, nickel-plated brass
- Coupling M20, 316L (1.4435)
- M12 connector, nickel-plated brass

Process connections

Process connection, sealing surface

- Flange ASME B16.5, RF (Raised Face)
- Flange EN1092-1, Form A
- Flange EN1092-1, Form B1
- Flange EN1092-1, Form C
- Flange EN1092-1, Form D
- Flange EN1092-1, Form B2
- Flange JIS B2220, RF (Raised Face)

ASME B16.5 flanges, RF

Pressure rating	Type	Material	Weight
Cl.150	NPS 1"	316/316L	1.0 kg (2.21 lb)
Cl.150	NPS 1-½"	316/316L	1.5 kg (3.31 lb)
Cl.150	NPS 2"	316/316L	2.4 kg (5.29 lb)

Pressure rating	Type	Material	Weight
Cl.150	NPS 2"	Enamel 1.0487	2.4 kg (5.29 lb)
Cl.150	NPS 3"	316/316L	4.9 kg (10.8 lb)
Cl.150	NPS 4"	316/316L	7 kg (15.44 lb)
Cl.300	NPS 2"	316/316L	3.2 kg (7.06 lb)
Cl.300	NPS 2"	Enamel 1.0487	3.2 kg (7.06 lb)

EN flanges EN 1092-1, A

Pressure rating	Type	Material	Weight
PN6	DN50	316L (1.4404)	1.6 kg (3.53 lb)
PN10/16	DN100	316L (1.4404)	5.6 kg (12.35 lb)
PN25/40	DN25	316L (1.4404)	1.3 kg (2.87 lb)
PN25/40	DN32	316L (1.4404)	2.0 kg (4.41 lb)
PN25/40	DN40	316L (1.4404)	2.4 kg (5.29 lb)
PN25/40	DN50	316L (1.4404)	3.2 kg (7.06 lb)
PN25/40	DN50	Enamel 1.0487	3.2 kg (7.06 lb)
PN25/40	DN80	316L (1.4404)	5.9 kg (13.01 lb)
PN25/40	DN80	Enamel 1.0487	5.9 kg (13.01 lb)

EN flanges EN 1092-1, B1

Pressure rating	Type	Material	Weight
PN6	DN50	316L (1.4404)	1.6 kg (3.53 lb)
PN10/16	DN100	316L (1.4404)	5.6 kg (12.35 lb)
PN25/40	DN25	316L (1.4404)	1.3 kg (2.87 lb)
PN25/40	DN32	316L (1.4404)	2.0 kg (4.41 lb)
PN25/40	DN40	316L (1.4404)	2.4 kg (5.29 lb)
PN25/40	DN50	316L (1.4404)	3.2 kg (7.06 lb)
PN25/40	DN50	Enamel 1.0487	3.2 kg (7.06 lb)
PN25/40	DN80	316L (1.4404)	5.9 kg (13.01 lb)
PN25/40	DN80	Enamel 1.0487	5.9 kg (13.01 lb)

JIS flanges B2220 (RF)

Pressure rating	Type	Material	Weight
10K	10K 50A	316L (1.4404)	1.7 kg (3.75 lb)

Operability

Operation concept

- Operation with button and rotary switches on the electronic insert
- Configuration of minimum or maximum detection via connection wiring
- Density range adjustment via two rotary switches, confirmation via test button

Local operation

Elements on the electronic insert

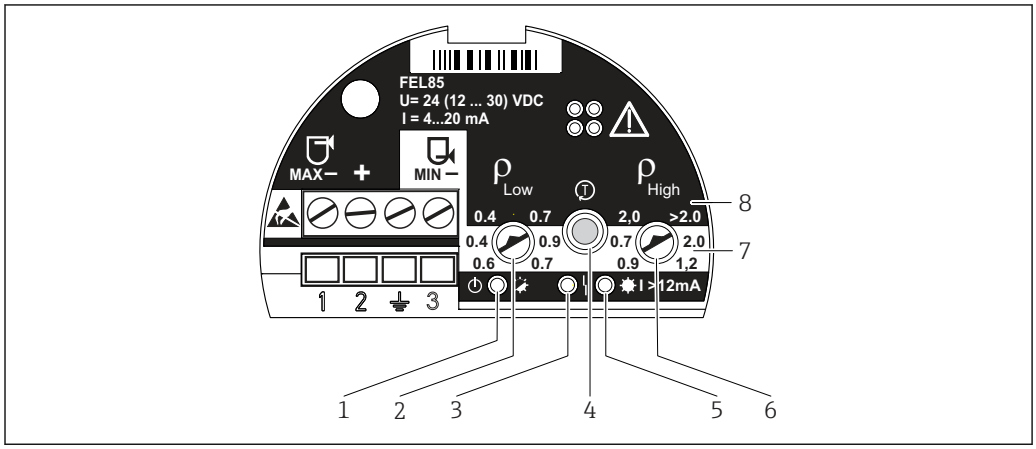

1 *Green LED, operation; initialization (lit), normal operation (flashes), fault (off or flashes alternately with red LED)*
2 *Density ρ_{Low} (rotary switch); Adjusts the lower density range limit*
3 *Red LED, fault; sensor error (lit permanently), operating error and electronic insert fault (flashing)*
4 *Test button; used to confirm configuration changes and activate proof testing*
5 *Yellow LED, current output; MAX (free) lit (13.5 mA), MIN (covered) lit (18.5 mA)*
6 *Density ρ_{High} (rotary switch); Adjusts the upper density range limit*
7 *MIN; white background indicates the adjustable density range in minimum detection mode*
8 *MAX; black background indicates the adjustable density range in maximum detection mode*

Certificates and approvals

Current certificates and approvals for the product are available at www.endress.com on the relevant product page:

1. Select the product using the filters and search field.
2. Open the product page.
3. Select **Downloads**.

CE mark

The measuring system meets the legal requirements of the applicable EU Directives. These are listed in the corresponding EU Declaration of Conformity together with the standards applied. Endress +Hauser confirms successful testing of the device by affixing to it the CE mark.

Ex approval

All data relating to explosion protection is provided in separate Ex documentation and is available from the Downloads area. The Ex documentation is supplied as standard with all devices approved for use in explosion hazardous areas.

Overfill protection system

Before mounting the device, observe the documentation from the WHG approvals (German Federal Water Act).

Approved for overfill protection systems and leakage detection.

Product Configurator: feature "Additional approval"

Functional safety

The device has been developed according to the IEC 61508 standard. The device can be used for overfill protection systems and dry-run protection up to SIL 3. A detailed description of the safety functions with the device, settings and functional safety data are provided in the "Functional Safety Manual" on the Endress+Hauser website: www.endress.com → Downloads.

Product Configurator: order code for "Additional approval"

Subsequent confirmation of usability according to IEC 61508 is not possible.

Marine approvals

Product Configurator: feature "Additional approval"

CRN approval

Device versions with a CRN approval (Canadian Registration Number) are listed in the corresponding registration documents. CRN-approved devices are marked with a registration number.

Any restrictions regarding the maximum process pressure values are listed on the CRN certificate.

Product Configurator: feature "Additional approval"

Pressure equipment with permitted pressure less than 200 bar, no pressure-bearing volume

Pressure instruments with a process connection that does not have a pressurized housing do not fall within the scope of the Pressure Equipment Directive, irrespective of the maximum working pressure.

If pressure equipment does not have a pressure-bearing housing, there is no pressure accessory present within the meaning of the Directive.

Druckgeräterichtlinie DGRL (PED) 2014/68/EU, Artikel 2, Absatz 5

Process seal as per ANSI/ISA 12.27.01

North American practice for the installation of process seals.

In accordance with ANSI/ISA 12.27.01, Endress+Hauser devices are designed as either single seal or dual seal devices with a warning message. This allows the user to forego the use of - and save the cost of installing - an external secondary process seal in the mating pipe as required in ANSI/NFPA 70 (NEC) and CSA 22.1 (CEC).

These instruments comply with the North American installation practice and provide a very safe and cost-saving installation for pressurized applications with hazardous fluids.

Please refer to the Safety Instructions (XA) of the relevant device for further information.

Ordering information

Detailed ordering information is available from your nearest sales organization www.addresses.endress.com or in the Product Configurator at www.endress.com:

1. Select the product using the filters and search field.
2. Open the product page.
3. Select **Configuration**.

Product Configurator - the tool for individual product configuration
- Up-to-the-minute configuration data
- Depending on the device: direct input of information specific to the measuring point, such as the measuring range or operating language
- Automatic verification of exclusion criteria
- Automatic creation of the order code and its breakdown in PDF or Excel output format
- Ability to order directly in the Endress+Hauser Online Shop

Service

- PWIS-free (paint-wetting impairment substances)
  The plastic protective cover is excluded from the PWIS cleaning
- Product documentation on paper

TAG

Measuring point (TAG)

The device can be ordered with a tag name.

Location of tag name
In the additional specification, select:
- Stainless steel tag plate
- Paper adhesive label
- TAG provided by the customer
- RFID tag
- RFID tag + stainless steel tag plate
- RFID tag + paper adhesive label
- RFID tag + tag provided by the customer
- IEC 61406 stainless steel tag
- IEC 61406 stainless steel tag + NFC tag
- IEC 61406 stainless steel tag, stainless steel tag

- IEC 61406 stainless steel tag + NFC, stainless steel tag
- IEC 61406 stainless steel tag, plate supplied
- IEC 61406 stainless steel tag + NFC, plate supplied

Definition of tag name
In the additional specification, specify:
Three lines of maximum 18 characters each
The specified tag name appears on the selected plate and/or on the RFID tag.

Accessories

The accessories currently available for the product can be selected at www.endress.com:

1. Select the product using the filters and search field.
2. Open the product page.
3. Select **Spare parts & Accessories**.

Weather protection cover PA6 (aluminum housing (F13, F17) and 316L (F27))

The weather protection cover can be ordered together with the device via the "Accessory enclosed" product structure.

It is used to protect against direct sunlight, precipitation and ice.

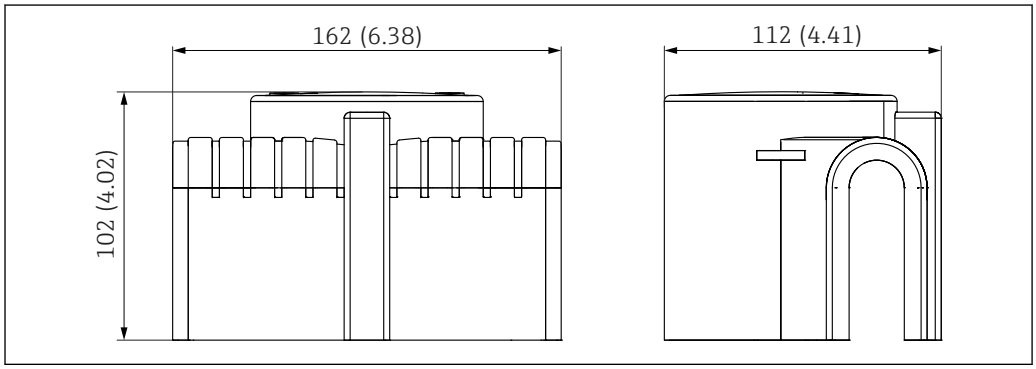

32 *Dimensions of weather protection cover PA6. Unit of measurement mm (in)*

- Order No. 71040497
- Material: PA6, gray
- Weight: 0.3 kg (0.66 lb)

Weather protection cover PBT (plastic housing (F16))

The weather protection cover is used to protect against direct sunlight, precipitation and ice.

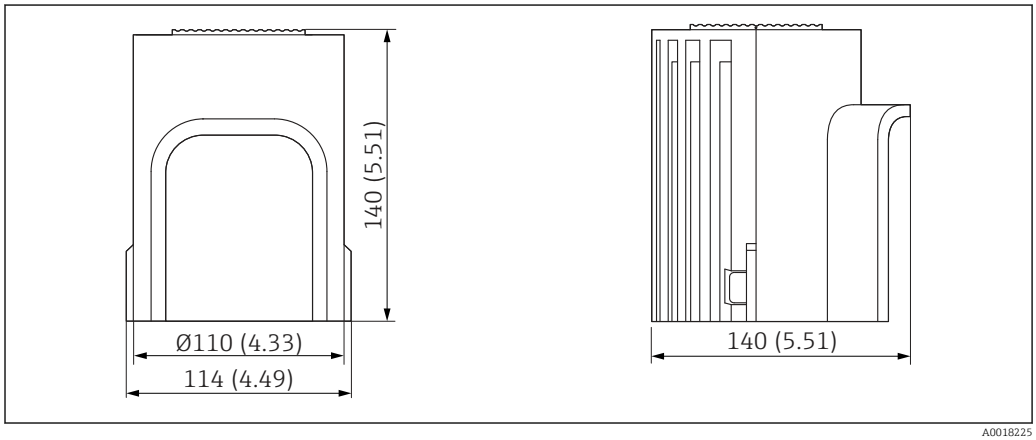

33 *Dimensions of weather protection cover PBT. Unit of measurement mm (in)*

- Order No. 71127760
- Material: PBT, gray
- Weight: 0.24 kg (0.53 lb)

M12 socket

The M12 sockets listed are suitable for use in the temperature range −25 to +70 °C (−13 to +158 °F).

M12 socket IP69
- Terminated at one end
- Angled
- 5 m (16 ft) PVC cable (orange)
- Slotted nut 316L (1.4435)
- Body: PVC
- Order number: 52024216

M12 socket IP67
- Angled
- 5 m (16 ft) PVC cable (gray)
- Slotted nut Cu Sn/Ni
- Body: PUR
- Order number: 52010285

Documentation

For an overview of the scope of the associated Technical Documentation, refer to the following:
- *Device Viewer* (www.endress.com/deviceviewer): Enter the serial number from the nameplate
- *Endress+Hauser Operations app*: Enter serial number from nameplate or scan matrix code on nameplate.

Standard documentation

Document type: Operating Instructions (BA)
Installation and initial commissioning – contains all the functions in the operating menu that are needed for a routine measuring task. Functions beyond this scope are not included.

Document type: Brief Operating Instructions (KA)
Quick guide to the first measured value – includes all essential information from incoming acceptance to electrical connection.

Document type: Safety Instructions, certificates
Depending on the approval, safety instructions are supplied with the device, e.g. XA. This documentation is an integral part of the Operating Instructions.
The nameplate indicates which Safety Instructions (XA) apply to the device.

Supplementary device-dependent documentation

Additional documents are supplied depending on the device version ordered: Always comply strictly with the instructions in the supplementary documentation. The supplementary documentation is an integral part of the device documentation.

Special Documentation

- FY01079F: Functional Safety Manual FTL85 with FTL825
- BA01038F: Nivotester FailSafe FTL825 (Operating Instructions)
- TI01027F: Nivotester FailSafe FTL825 (Technical Information)



www.addresses.endress.com

Endress+Hauser

People for Process Automation