

Optical emission spectrometers

Thermo Scientific ARL iSpark Plus Series

Iron and steel • Non-ferrous metals and alloys •
Fine precious metals • Non-metallic micro-inclusions

ARL iSpark Plus

OES Spectrometers

Throughout these years, performance, stability, reliability and longevity have been the key attributes of our optical emission spectrometers. Thermo Scientific™ ARL™ iSpark™ Plus Metal Analyzers combine these guiding principles with our experience and technical innovation to bring our customers the complete value-based solution they have come to expect from our company.

ARL iSpark Plus Metal Analyzers can analyze the elements necessary in your current and future applications. It is helps support your analytical needs, whether for incoming material or metal quality control and production analysis. Designed for reliable, continuous operation, the ARL iSpark Plus Metal Analyzers deliver reliable performance year after year.

The ARL iSpark Plus metal analyzer




Al_2O_3

Innovative optical design offering solutions for your needs

The ARL iSpark Plus OES Spectrometer is designed around the world's most famous one-meter focal length PMT optics of the ARL 3460 and ARL 4460 OES Spectrometers. Its optical design concept offers an optimum solution for everyone looking for analytical excellence.

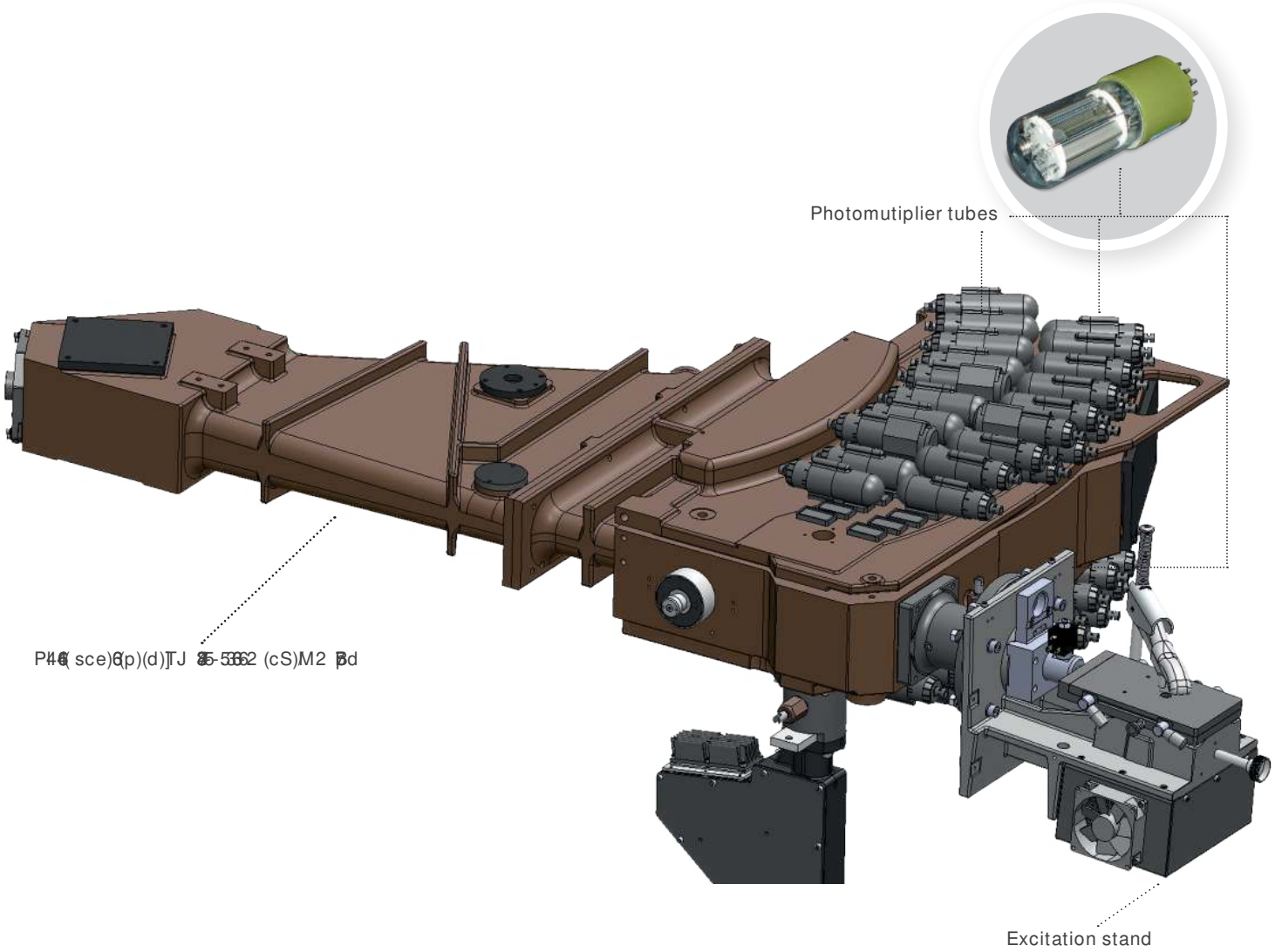

PMT optics

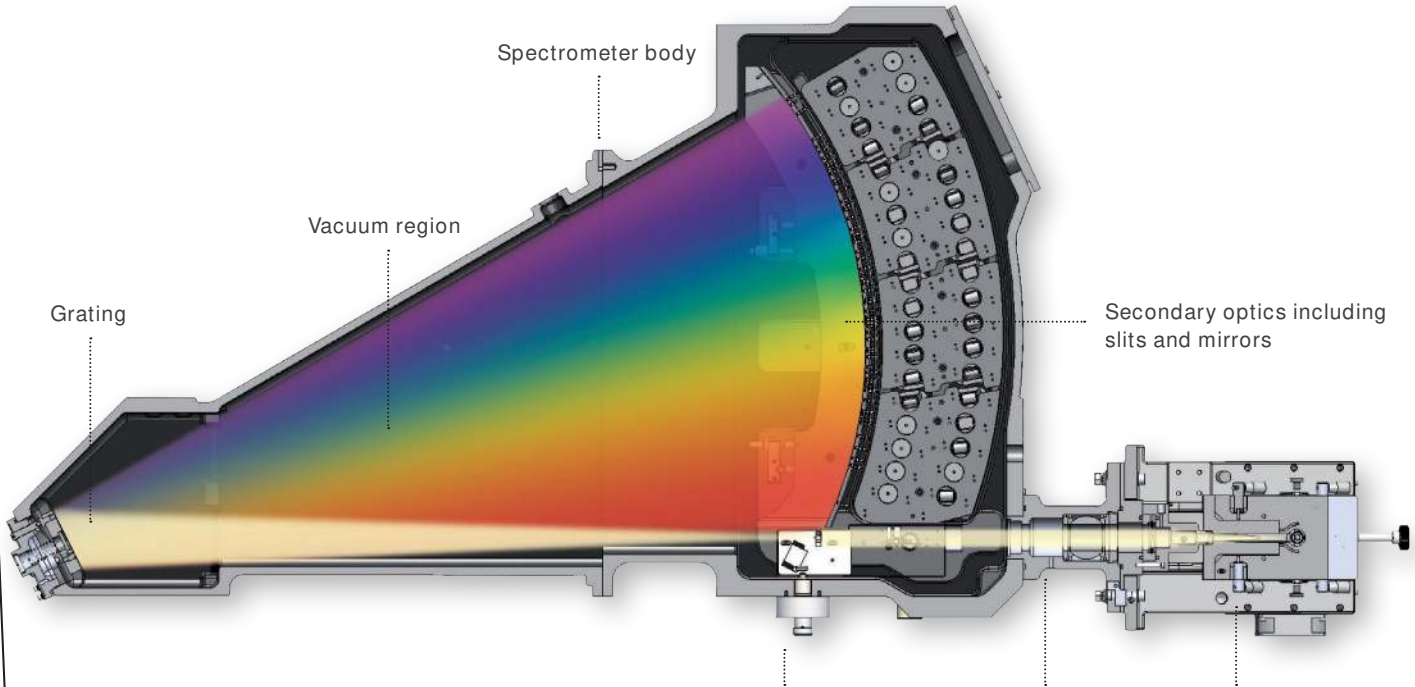

The spectrometer body is made of cast iron, operates under clean vacuum, and is temperature controlled for ultimate stability, simplifying operation for users. PMTs with

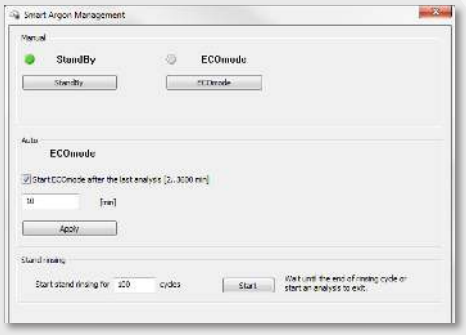

Smart Argon Management (SAM) interface allowing starting or programming argon saving modes

intelliSource spark source

The Thermo Scientific™ intelliSource™ spark source is a double current controlled source (CCS) and innovative spark source on the market. More flexible and precise than the other digital sources, it allows discharge shapes to be tailored for efficient sample surface preparation, material ablation and light emission in metallic matrices.

Other innovative features contribute to the performance of this spark source. For example, superior trace element analysis is obtained thanks to DISC (Discharge Interrupt by Short-Circuit)

- Front access to all modules of the instrument (e.g., vacuum pump, argon filter, and electronics) facilitates maintenance and service
- Space saving: the housing cover requires very little clearance behind when opened
- All components are accessible from the front, so the instrument can be installed against a wall or even in a corner
- The sample clamp with ergonomic design accommodates right- or left-handed operation

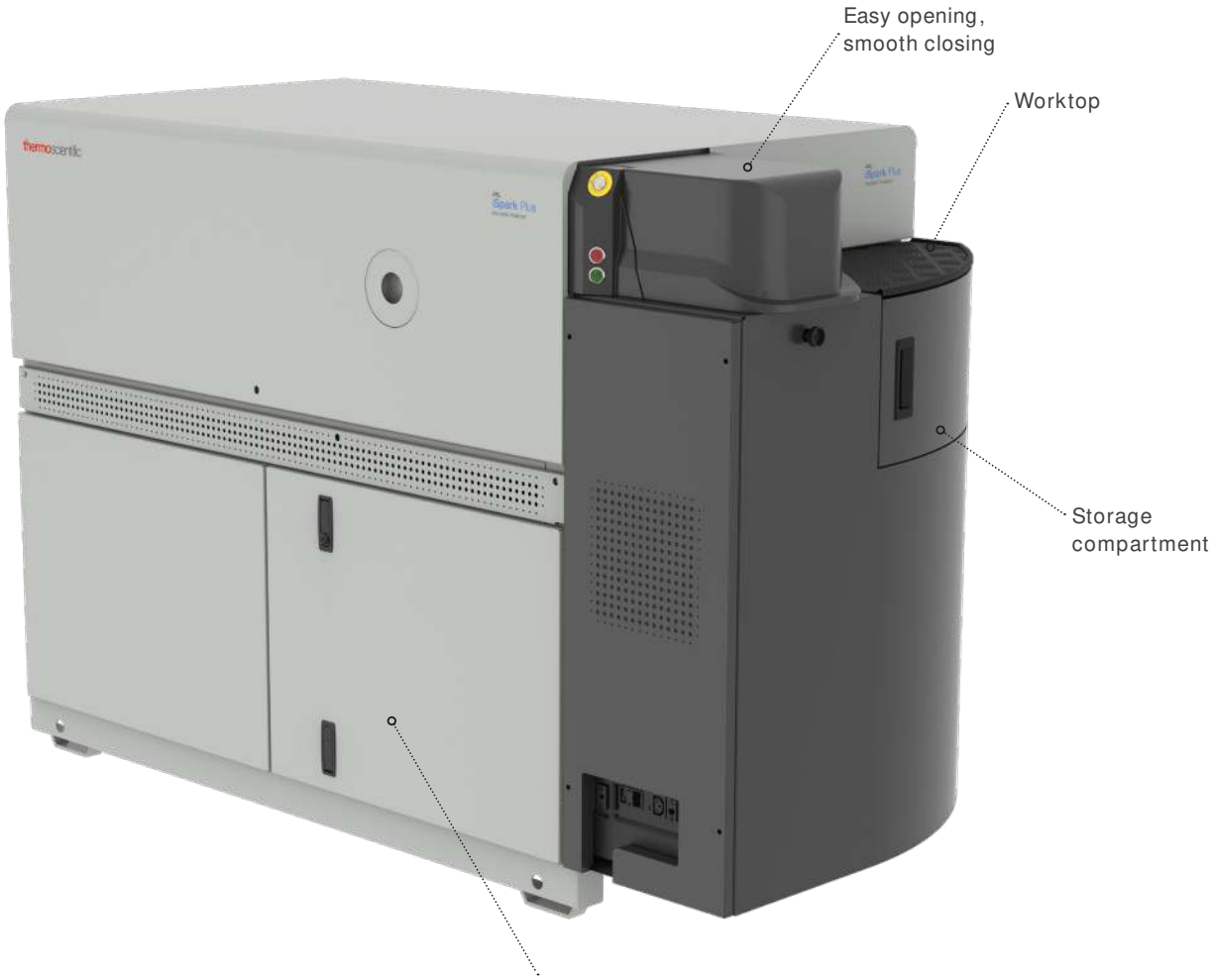

Signal acquisition and processing

The PMT signal is integrated during TGA (Time Gated Acquisition) windows, i.e., time windows synchronized with the single sparks. TGA is an ultra-high precision version of TRS (Time Resolved Spectroscopy) that allows improved sensitivity and accuracy by collecting the signal with minimal noise, background emission, and spectral interference.

In addition, PMT acquisition features include Single Spark Acquisition (SSA) and low noise integrator to suppress dark current and offset.



The following features also contribute to the quality and the reliability of the analysis:

- The FAST (Flexible Acquisition STart and stop) algorithm allows acquisition of an optimal subset of single spark

Applications

The ARL iSpark Plus Spectrometers are delivered as turn-key systems with ready-to-use applications, pre-configured and calibrated in our factory. Analytical conditions, parameters, and calibrations are optimized by our specialists to support accuracy, performance, analysis speed, and efficient argon consumption. Element coverage and calibration ranges can be extended upon request. Comprehensive application notes for various metal matrices are available.

Calibration

Accuracy, which depends on the calibration of the instrument, is the most important figure of merit required for a spectrometer. The ARL iSpark Plus Metal Analyzers are individually calibrated in our factory. The calibrations

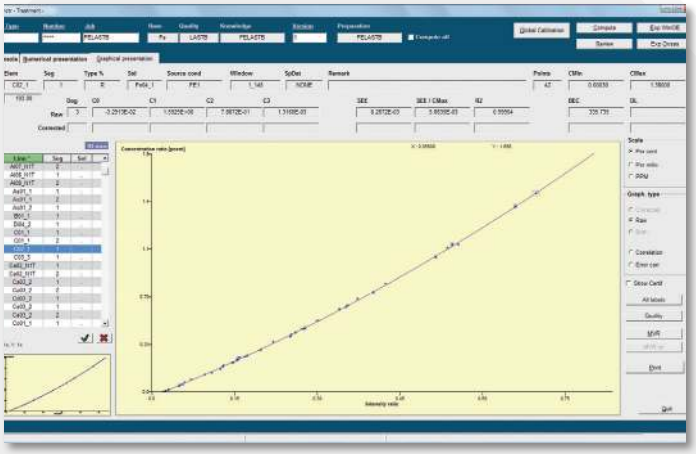

Calibration curve established with CARL

Main attributes and benefits of the Spark-DAT methods

- Routine characterization of inclusions during metal production
- Simultaneous inclusion and elemental concentration analyzes
- As fast as a standard OES analysis
- Easy sample surface preparation and maintenance, no need for polishing

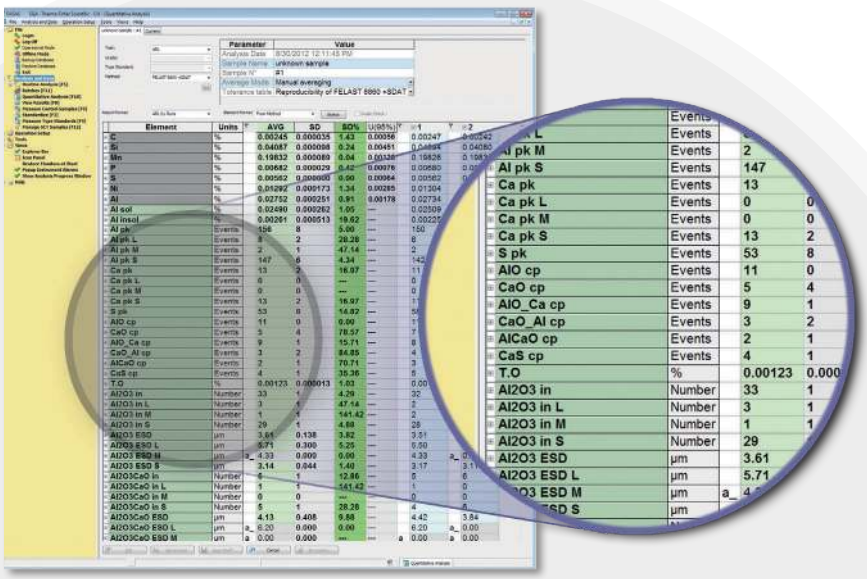

Detail of OXSAS display showing the result of simultaneous elemental concentration and inclusion analysis of a low alloy steel sample. The top results in % are from elemental analysis. All other results are from Spark-DAT methods. They include Al sol, Al insol, and total oxygen (TO), peaks and coincidental peaks, and inclusion size.

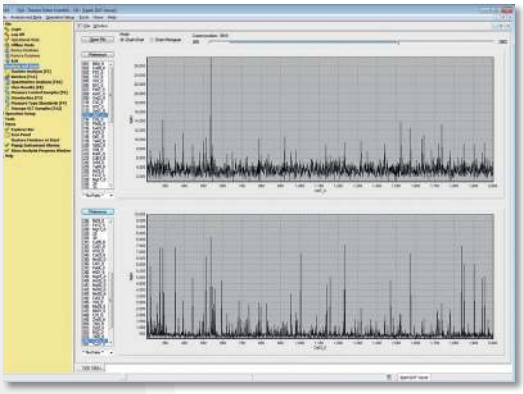

Single Spark run charts allowing visualization of the inclusion signals of the two elements Al and Ca in steel.

Thermo Scientific™ OXSAS™ Analytical Software provides virtually unlimited analytical capacity and flexibility, and includes all the features allowing data management, instrument control, calibration, instrument set-up, and diagnostic.

OXSAS software software gives the ability to work at various functional levels, from simple operations for routine analysis to a wider access for managers or users performing more critical operations (e.g. calibration or user account management).

OXSAS software offers important features (e.g. measurement uncertainty and full traceability) for companies looking for accreditation of their analytical methods. It also includes a comprehensive set of tools for quality and maintenance management. The Maintenance Management module assists the operator in the management of routine and preventive maintenance. This simple and efficient tool helps to guarantee

Worldwide customer support

Excelling in optical emission spectrometry since 1934, we provide you the support of a major international corporation:

- A comprehensive worldwide after-sales service network assists with resolution of day-to-day queries and helps ensure that the ARL iSpark Plus Spectrometer achieves the very high standards of reliability and durability it is designed for
- Operational performance validation and possible online support with diagnostic help
- Application product teams to advise on analytical tasks from sample preparation to delivering the accurate result
- Dedicated training that allows you to exploit the full capabilities of your ARL iSpark Plus Spectrometer

