Level Pressure Flow Temperature Liquid Analysis Registration Systems Components Services Solutions

Operating Instructions

Stamoclean CAT430-*1

Micro / Ultra filtration system with low-power diaphragm pump

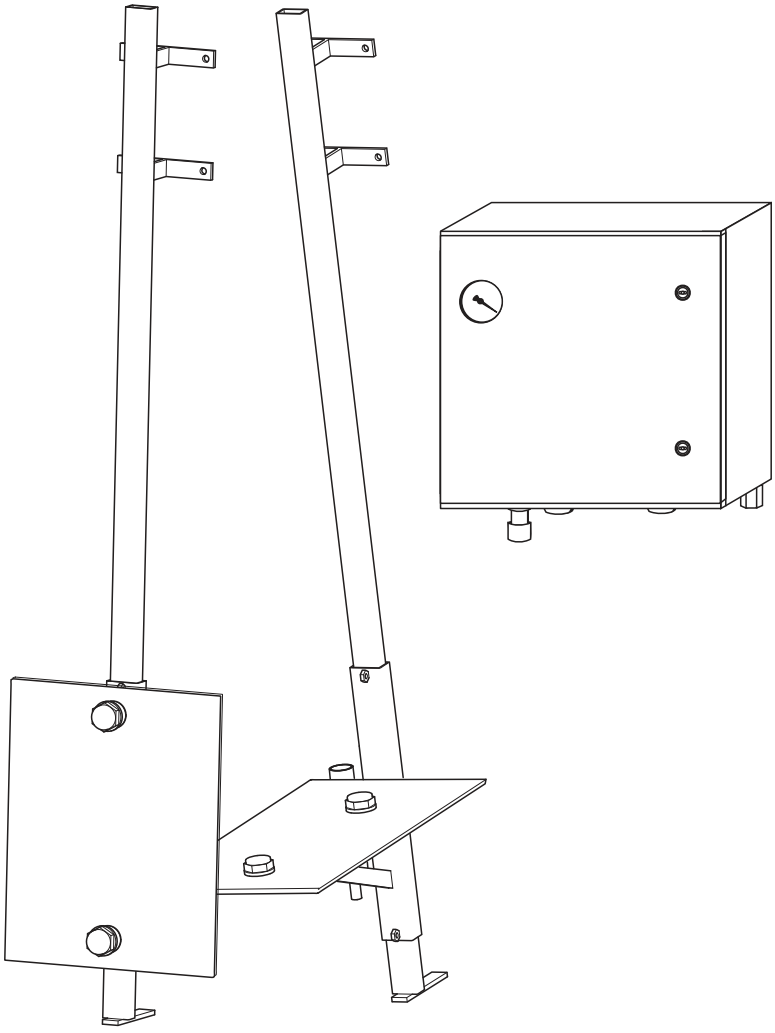

BA338C/07/en/01.09
71087238

Endress+Hauser

People for Process Automation

Table of contents

1 Safety instructions 4

1.1 Designated use 4
1.2 Installation, commissioning and operation 4
1.3 Operational safety 4
1.4 Return 4
1.5 Notes on safety icons and symbols 5
1.6 Cross reference symbols 5

2 Identification 6

2.1 Nameplate 6
2.2 Scope of delivery 7
2.3 Certificates and approvals 7

3 Installation 8

3.1 Incoming acceptance, transport, storage 8
3.2 Quick installation guide 8
3.3 Installation instructions 9
3.4 Post-installation check 15

4 Wiring 16

4.1 Wiring diagram 16
4.2 Power supply connection 17
4.3 Connection of an optional hose heater 18
4.4 Post-connection check 18

5 Operation 19

5.1 Operation and commissioning 19
5.2 Display and operating elements 19
5.3 Local operation 19

6 Commissioning 21

6.1 Function check 21
6.2 Switch-on 21
6.3 Checking the sample transportation 23
6.4 Checking the sampling quantity 23
6.5 Setting the collecting volume 23

7 Maintenance 25

7.1 Maintenance activities 25
7.2 Repairs 28

8 Accessories 33

8.1 Filter element holders 33
8.2 Filter element accessories 34

9 Trouble-shooting 35

9.1 Trouble-shooting instructions 35
9.2 Spare parts 36
9.3 Return 38
9.4 Disposal 38

10 Technical data 39

10.1 Power supply 39
10.2 Performance characteristics 39
10.3 Environment 39
10.4 Process 39
10.5 Mechanical construction 40

Index 41

1 Safety instructions

1.1 Designated use

The CAT430 micro/ultra filtration system is designated to take samples for process measuring devices in sewage treatment plants.
The system transports clear samples directly from the clarification basin to the measuring device.

Any other use than the one described here compromises the safety of persons and the entire measuring system and is not permitted.
The manufacturer is not liable for damage caused by improper or non-designated use.

1.2 Installation, commissioning and operation

Please note the following items:
- Installation, commissioning, operation and maintenance of the measuring system must only be carried out by trained technical personnel.
  Trained personnel must be authorized for the specified activities by the system operator.
- Electrical connection must only be carried out by a certified electrician.
- Technical personnel must have read and understood these Operating Instructions and must adhere to them.
- Before commissioning the entire measuring point, check all the connections. Ensure that electrical cables and hose connections are not damaged.
- Do not operate damaged products and secure them against unintentional commissioning. Mark the damaged product as being defective.
- Measuring point faults may only be rectified by authorized and specially trained personnel.
- If faults can not be rectified, the products must be taken out of service and secured against unintentional commissioning.
- Repairs not described in these Operating Instructions may only be carried out at the manufacturer's or by the service organization.

1.3 Operational safety

The product is designed to meet state-of-the-art safety requirements, has been tested and left the factory in a condition in which it is safe to operate. Relevant regulations and European standards have been observed.

As the user, you are responsible for complying with the following safety conditions:
- Installation instructions
- Local prevailing standards and regulations.

1.4 Return

If the device requires repair, please send it *cleaned* to the sales centre responsible. Please use the original packaging, if possible.

Please enclose the completed "Declaration of contamination" (copy the second last page of these Operating Instructions) with the packaging and the transportation documents.
No repair without completed "Declaration of contamination"!

1.5 Notes on safety icons and symbols

1.5.1 At the device

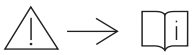

This symbol is found in various places on the device (nameplate, connection box, cable duct cover). The symbol indicates that it is essential that you read the Operating Instructions for the subject in question.

1.5.2 In the manual



Warning!
This symbol alerts you to hazards that can cause serious damage to the instrument or to persons if ignored.



Caution!
This symbol alerts you to possible faults which could arise from incorrect operation. They could cause damage to the instrument if ignored.



Note!
This symbol indicates important items of information.

1.6 Cross reference symbols

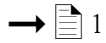

This symbol indicates a cross reference to a defined page (e.g. p. 1).



This symbol indicates a cross reference to a defined figure (e.g. fig. 2).

2 Identification

2.1 Nameplate

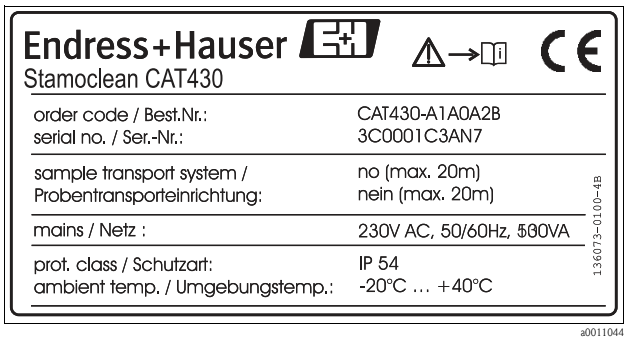

Fig. 1: Example of a nameplate

2.1.1 Product structure

Sample volume								
A	250 ml/h (0.07 gal/hr); 1-2 CA71							
B	500 ml/h (0.13 gal/hr); 3-4 CA71							
Y	Special version acc. to customers specification							
	Sample line (delivery rate, pump type and hose at the pressure side)							
	1	up to 20 m (65 ft), with diaphragm pump and 20 m (65 ft) hose						
	4	up to 100 m (330 ft) with diaphragm pump and 100 m (330 ft) hose						
	5	up to 100 m (330 ft) with diaphragm pump and 50 m (160 ft) hose						
	6	up to 100 m (330 ft) with diaphragm pump and 20 m (65 ft) hose						
	9	Special version acc. to customers specification						
		Heating at the pressure side						
		A	Without sample hose heater					
		D	With 8 m (26 ft) sample hose heater					
		F	With 18 m (59 ft) sample hose heater					
		Y	Special version acc. to customers specification					
			Power supply					
			0	230 V AC				
			1	115 V AC				
				Heating at the suction side				
				A	with heating			
				B	without heating			
					Additional equipment			
					2	Mounting bracket (for control box), wall mounting		
					3	Mounting bracket (for control box), rail mounting		
					4	Housing for additional CNS70 resp. CSS70		
					9	Special version acc. to customers specification		
						Assembly		
						A	No assembly	
CAT430 -								**complete order code**

Note!
Please, order filter element holders separately. See "Accessories".

2.2 Scope of delivery

The scope of delivery comprises:
- 1 control box, complete:
  - with filtrate line connected (suction side), length 4.5 m (14.8 ft), hose heating 24 V
  - 4 plastic brackets for wall mounting
  - 2 pipe clamps 44 - 49 mm (1.73 - 1.93 inch), set screw M8, for rail mounting
  - 1 rubber stop with screw, for rail mounting
- Set of:
  - 1 collecting vessel with PE hose 10/8 mm (0.31/0.39 inch), length 2.5 m (8.2 ft)
  - 1 PE hose roll 4/2 mm (0.16/0.08 inch), length 2.5 m (8.2 ft)
  - 1 PVC hose roll 4/2 mm (0.16/0.08 inch), length 2.0 m (6.7 ft)
  - 1 PVC vent hose 6/4 mm (0.24/0.16 inch), length 4 m (13.1 ft)
  - 1 housing key
  - 1 knurled nut
  - 1 dummy plug
  - 1 pressure-reducing valve
  - 1 reducing fitting 4 —> 1/8 inch
  - 1 fitting 4 mm (0.16 inch)
- 1 or 2 Filter plate(s) (depending on ordered version)
- 1 or no assembly (depending on ordered version)
- 1 filtrate line (pressure side) with PE filtrate hose 4/2 mm(0.16/0.08 inch), min. length 20 m (66 ft) depending on ordered version
- 1 acceptance certificate
- 1 Operating Instructions BA338C/07/en

2.3 Certificates and approvals

Declaration of conformity
The product meets the requirements of the harmonized European standards. It thus complies with the legal requirements of the EC directives.
The manufacturer confirms successful testing of the product by affixing the CE symbol.

3 Installation

3.1 Incoming acceptance, transport, storage

- Make sure the packaging is undamaged!
  Inform the supplier about any damage to the packaging.
  Keep the damaged packaging until the matter has been settled.
- Make sure the contents are undamaged!
  Inform the supplier about damage to the contents. Keep the damaged products until the matter has been settled.
- Check that the order is complete and agrees with your shipping documents.
- The packaging material used to store or to transport the product must provide shock protection and humidity protection. The original packaging offers the best protection. Also, keep to the approved ambient conditions (see "Technical data").
- If you have any questions, please contact your supplier or your local sales center.

3.2 Quick installation guide

A complete measuring system comprises:
- a CAT430 filter system
- a collecting vessel
- a CA71xx analyzer

Optionally, a sensor with flow assembly can also be integrated into the measuring system (external only, cannot be installed in the control box housing).
If an assembly with low dead volume and flow resistance is used (see "Accessories"), the sensor can be installed in line with the analyzer's inlet.

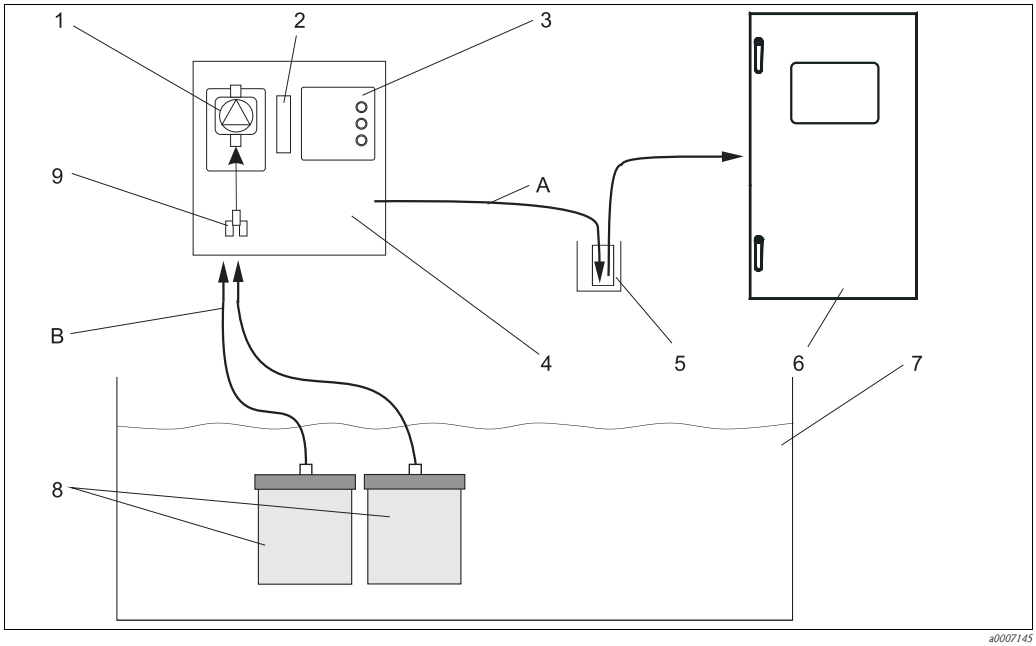

Fig. 2: Measuring system

1	*Pump box*	*5*	*Collecting vessel*
2	*Timer*	*6*	*Analyzer*
3	*Control unit*	*7*	*Activated sludge basin*
4	*Diaphragm pump*	*8*	*Membrane filter*
A	*Sample line to the analyzer (discharge side)[1)]*	*9*	*Y-piece*
B	*Filtrate line from the filter elements (suction side of the pump, PE, 4.5 m (15 ft), with hose heating)*		

1) Two sample hoses are integrated in a protecting hose: 1 x 1.5/3 mm (0.06/0.12 inch) PTFE hose (standard) and 1 x 2/4 mm (0.08/0.16 inch) PE hose (spare).

3.3 Installation instructions

To mount the individual modules, proceed as follows:

1. Mount the filter element holders.
2. Mount the guide tube, retaining slide and filtrate line.
3. Mount the filter elements.
4. Mount the control box.
5. Connect the sample lines to the measuring devices.

Caution!

- Before beginning installation, make sure that there are no pipes, stirrers or other equipment up to approx. 1 m (3.3 ft) below the surface of the water at the intended point of installation. This equipment can damage the filter elements.
- Check that there is sufficient space between the filter unit and the rim of the basin. This applies especially to filter units with numerous filter elements.
  If there is not sufficient space, a special holder must be used.
- The flow rate at the point of installation must not be over 2 m/s (6.6 ft/s).

3.3.1 Mounting the filter element holders

Note!
Please, order filter element holders separately. See "Accessories".

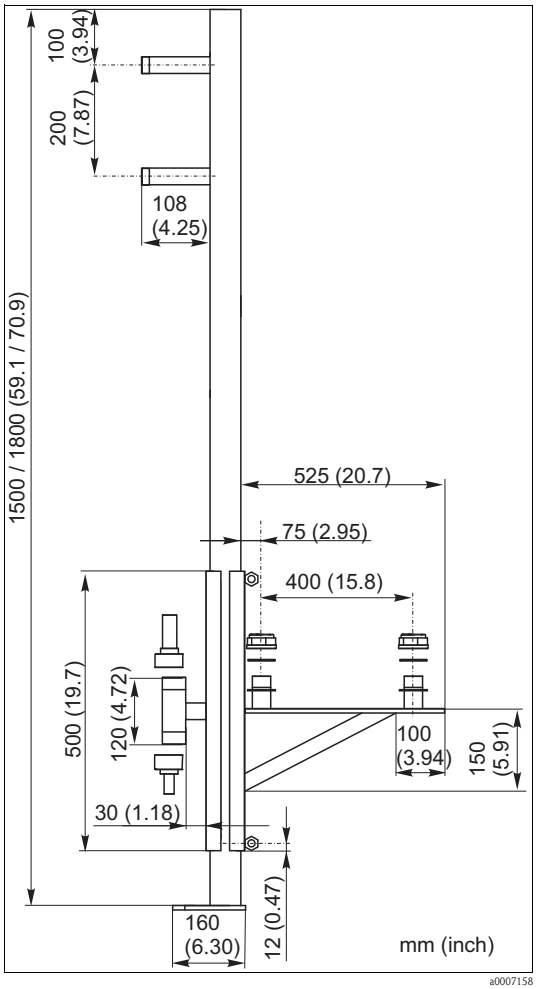

Fig. 3: Holder for open channel, side view

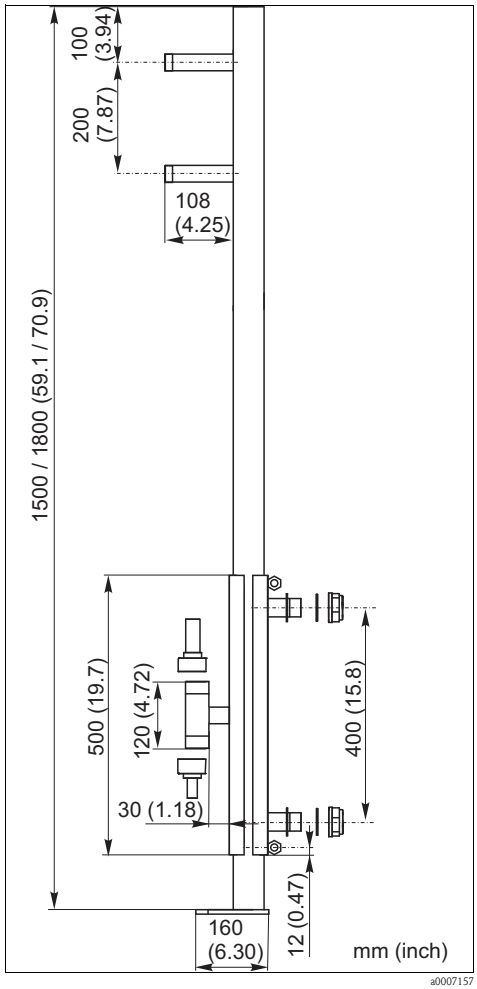

Fig. 4: Holder for basin, side view

Note!
You will need a hammer drill with a 12 mm (0.47 inch) drill bit.

1. Drill four holes with a diameter of 12 mm (0.47 inch) into the side of the wall facing the basin. The distance from the upper end of the wall should be approx. 10 cm (3.94 inch).
2. Screw the holders in.
   Make sure, the basin holder is at least 60 cm (23.6 inch) below the water level (resp. the open channel holder at least 35 cm (13.8 inch)).

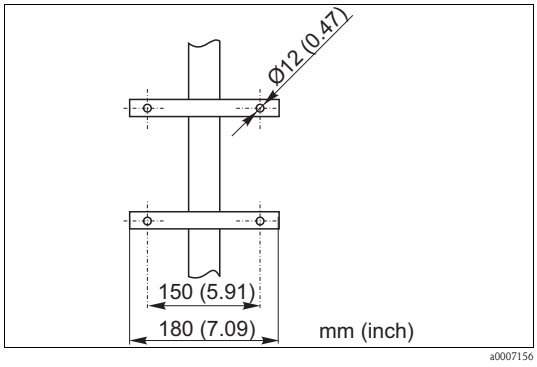

Fig. 5: Wall mounting of the filter holder (accessories)

3.3.2 Mounting the retaining slide and filtrate pipe

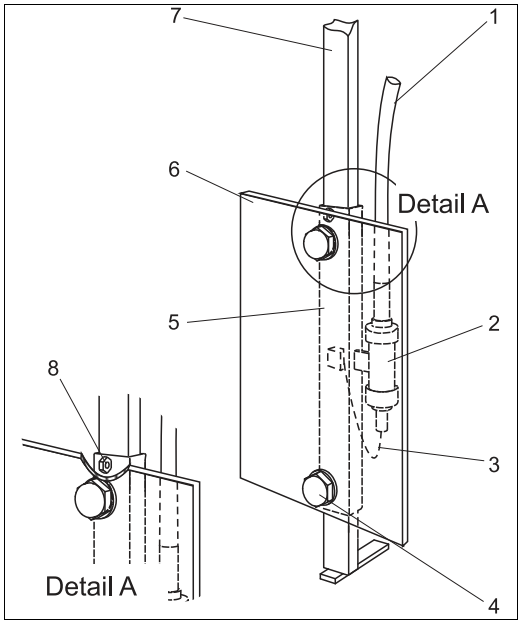

Fig. 6: Filter element with retaining slide

1 Filtrate line
2 T-piece
3 Filtrate hose
4 PVC thread cap
5 Retaining slide
6 Filter element
7 Mounting guide pipe
8 Hexagon nut

Perform the following steps outside the basin resp. the open channel:

1. Feed the filtrate hose (→ 6, pos. 3) of the filtrate line (pos. 1) through the T-piece at the PVC retaining slide (pos. 5).
2. Screw the filtrate line in tight with the PVC hose gland of the T-piece.
3. Fasten the stainless steel chain at the retaining slide by directing it through the heaxagon nut (pos. 8).
4. Remove the PVC screw caps (pos. 4) and place them so that they can be reached.

Caution!
- Secure the retaining slide, the stainless steel chain, the filtrate line and the PVC caps, in order to prevent them falling into the basin.
- Do not push the retaining slide onto the mounting guide pipe before having mounted the filter elements.

3.3.3 Mounting the filter elements

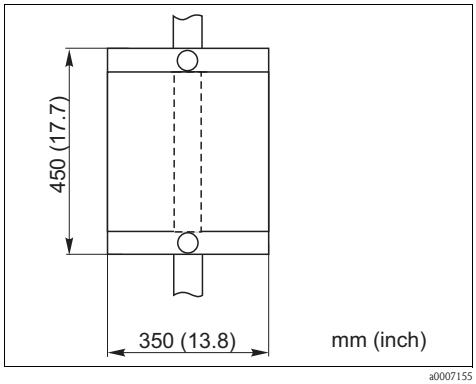

Fig. 7: Filter element

The filter elements are delivered ready for use. They are packed in a plastic bag with an additional cover of corrugated cardboard to protect them against mechanical damage.

Caution!
- The surface of the filter element membrane (bright surface) must not be touched or in any way scratched with sharp objects or fingernails. Otherwise, the membrane is irreparably damaged. Therefore, always handle the filter element at the free-standing PVC ends.
- Once it is used for the first time in the basin, always keep the membrane moist. Otherwise, it becomes brittle and breaks.

Note!
You will need an open-end wrench 14/15 a/f.

Installation:

1. Open the corrugated cardboard cover at the top by removing the tear-off strip.
2. Remove the corrugated cardboard spacer. There is a threaded elbow joint in the middle of it, which you will require in the step after the next.
3. Take out the filter element and remove the plastic bag.
4. Screw the threaded elbow joint into the threaded hole on the reverse side of the filter element. Carefully tighten the threaded elbow joint with the open-end wrench, so that the O-ring on the threaded elbow joint seals cleanly to the PVC carrier plate. Avoid over-tightening the thread.
5. Have the PVC screw caps (→ 6, item 4) ready.
6. Put the filter plate onto both threaded adapters at the retaining slide (item 5) such that the threaded elbow joint faces the retaining slide.
7. Screw the PVC cap on by hand.
8. Cut the filtrate hose (item 3) to the right length, so that it runs in the bend.

Note!
When using numerous filter elements, ensure that the colored identification sleeves on the filtrate hoses do not fall off and are not cut off. Used hoses should be shortened by approx. 10 mm (0.39 inch) because the lateral surface always gets scratched somewhat when pulled out. This leads to leakages.

9. Slide the filtrate hose into the threaded elbow joint coupling and press it all the way in. There is an O-ring in the coupling, so that the hose has to be pressed in until a pressure point has been overcome.
10. Push the retaining slide with the filter element onto the mounting guide pipe.
11. Put the retaining slide with the filter element down by the chain until the limit stop. Secure the chain end at the rail.
    The complete filter unit has to be below the water level.

3.3.4 Mounting the control box

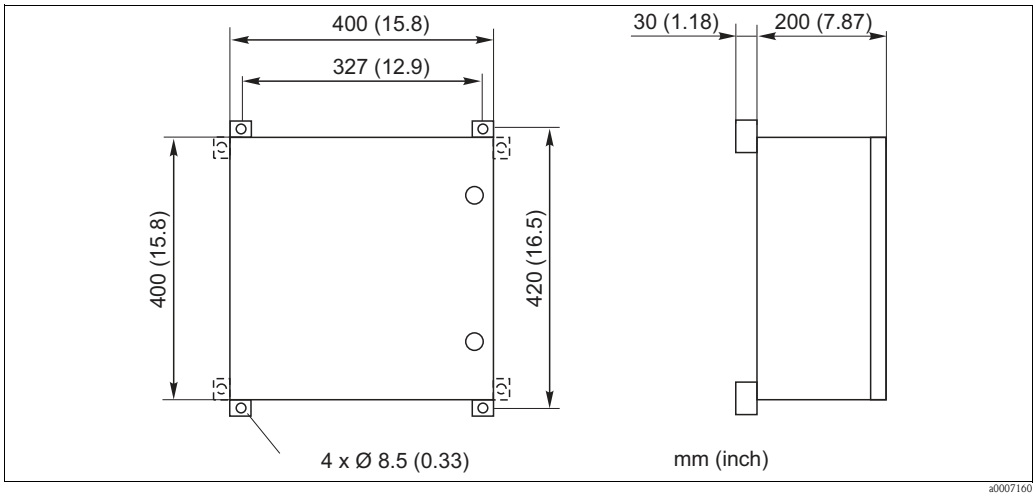

Fig. 8: Control box dimensions, left front view, right side view

Depending on the version, the control box is delivered with two clips for rail mounting or with four plastic brackets for wall mounting.

1. Mount the clips or the brackets at the holes intended for that purpose on the reverse side of the control box. For this, the clips must be fixed to the upper holes.
2. **Rail mounting:**
   Screw the clips on the highest, horizontally-running rail pipe, right by the filter station. For the box to hang straight, the supplied rubber buffer must be attached to the reverse side of the box. For this, drill a hole with a 4 mm (0.16 inch) diameter in the middle of the box position, on which a lower horizontal rail pipe is situated. To secure the rubber buffer, use the supplied Phillips screw.
3. **Wall mounting:**
   Hold the box with the brackets screwed onto it against the wall and mark the holes. Then drill the holes and use 8 mm screws and fitting anchors or 8 mm anchor pins to secure the box to the wall.

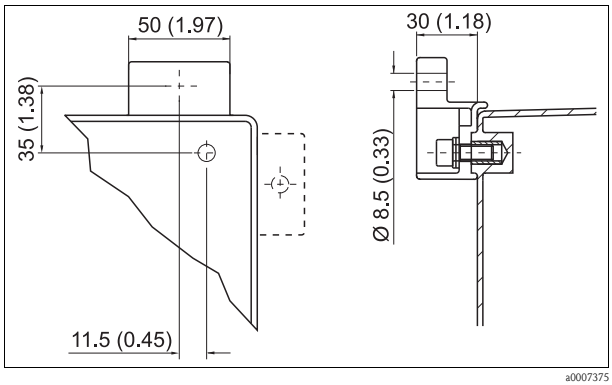

Fig. 9: Wall brackets

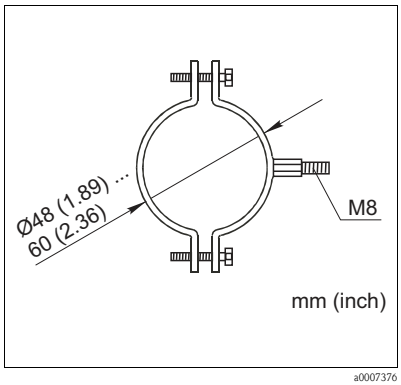

Fig. 10: Pipe clamp for rail mounting

3.3.5 Connecting the sample lines to the measuring devices

For the connection of the filtrate lines please refer to the following figure.

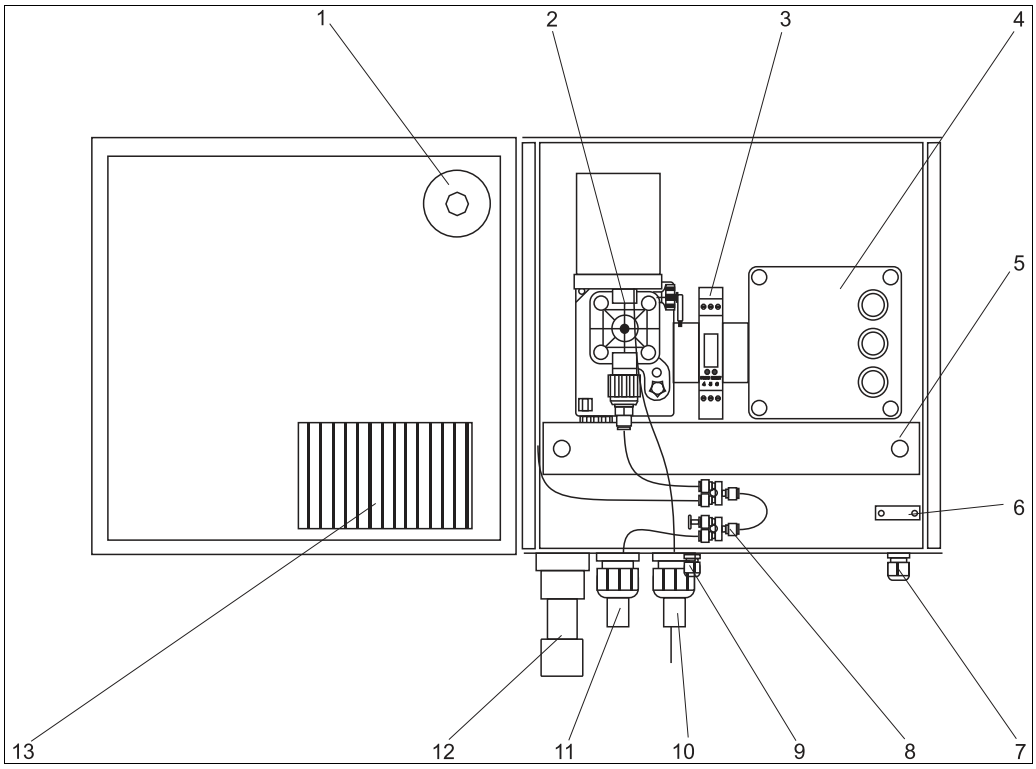

Fig. 11: Control box

1 Manometer
2 Diaphragm pump
3 Timer
4 Control unit with connection box inside
5 Cable duct
6 Strain relief for mains cable
7 Cable gland for mains connection
8 Y fitting
9 Gland for vent hose
10 Hose gland for sample line to the analyzer
11 Hose gland for filtrate line from filter
12 Pipe socket with micro thermostat
13 Housing heater

Filtrate line from the filter elements

If the filtrate line to the filter elements has not already been connected in the factory, proceed as follows:

1. Slide the filtrate hoses protruding from the filtrate hose (one or two, depending on version) and the feed line of the heater cable through the hose gland (→ 11, pos. 11). Slide the spiral hose far enough into the hose gland that it is flush inside and then tighten the hose gland.
2. Cut the filtrate hoses such that you can insert them comfortably into the Y fitting plug-in connector (pos. 8).

Sample line to the measuring devices

The sample line to the measuring devices consists of a spiral jacket hose, a thin filtrate hose and, depending on scope of delivery, an electric band heater.

Caution!
Lay hose lines such that they are protected against frost, where possible in underground cable ducts. Make sure that you do not overstretch the hose.

Electric band heater up to 20 m (66 ft) and more (connection in the control box):
If the hoses and the electric band heater have not already been connected in the factory, proceed as follows:

1. Remove the plug from the thermal switch's feeder cable with an edge-cutter.
2. Loosen the nut on the Pg hose gland from the end of the spiral hose.
3. Pull the thin filtrate hose first and then the thermal switch incl. its feeder cable through the nut.
4. Guide all hose ends and the thermal switch through the hole (→ 11, pos. 10) into the control box.
5. Insert the hose gland into the hole and screw the nut on tight.
6. Remove the foamed plastic pad from the pipe socket. Slide the thermal switch into the pipe socket, such that the end of the electric band heater is at the top and the feeder cable is at the bottom (→ 12).
7. Push the foamed plastic pad over the thermal switch into the pipe socket.

Caution!
There is a micro thermostat for the housing heater in the pipe socket. Be careful when inserting the thermal switch because there is not much space to work in.

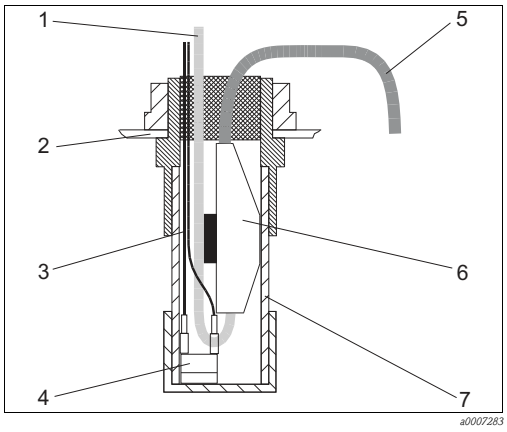

Fig. 12: Pipe socket

1 Mains for band heater 230 V
2 Control box bottom
3 Two-core cable 24 V
4 Micro thermostat 24 V
5 Band heater 230 V
6 Thermal switch (orange)
7 Pipe socket housing

8. Guide the power cable for the thermal switch from the left into the cable duct (→ 11, item 5) to the connection box (item 4).
   For electrical connection, please read the Section “Wiring”.
9. Unscrew the splash protection cap (→ 13, item 1) from the diaphragm pump.
10. Guide the filtrate hose (item 2) from below through the right-hand bore in the splash protection base (item 8).
11. Cut the filtrate hose such that you can insert it comfortably into the plug-in connector of the pressure connection (item 9).
    Ensure that you push the hose all the way in the plug-in connector. You must overcome a pressure point in so doing.
12. Pull the filter hose back far enough so that it runs in a relatively narrow bend at the top (→ 13).
    Ensure, however, that you do not fold the hose.
13. Screw the splash protection cap back on.
14. Now lay the sample line (spiral jacket hose incl. filtrate line and electric band heater) to the measuring devices.
    Where possible, use available cable ducts or empty underground pipes. With the corresponding order, the filtrate hose is protected by the electric band heater over the entire area exposed to frost.

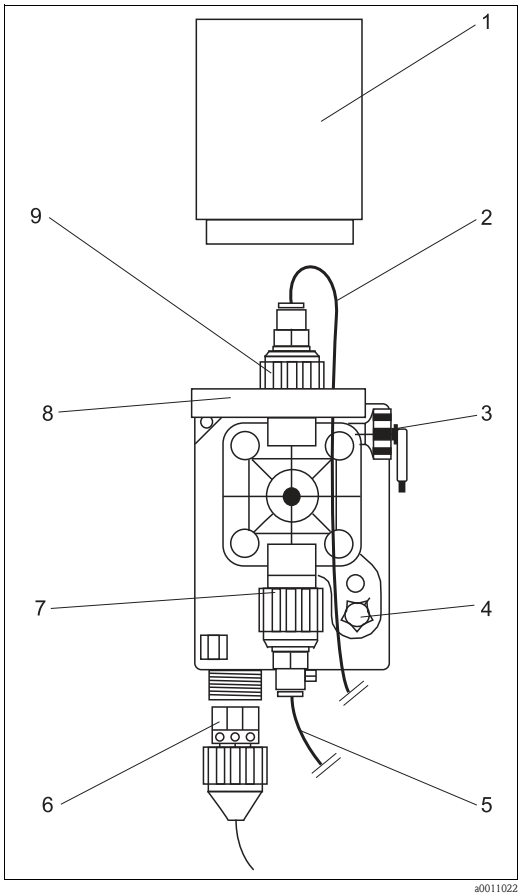

Fig. 13: Diaphragm pump

1 Splash protection cap
2 Filtrate line to the measuring devices
3 Vent screw with hose nozzle
4 Rotary knob for stroke frequency
5 Filtrate hose of filter
6 Power connector
7 Pressure connection with plug-in connector
8 Splash protection base
9 Suction side with plug-in connector

3.4 Post-installation check

- After installation, check that all connections are fitted tightly and are leakage resistant.
- Ensure that the hoses cannot be removed without effort.
- Check all hoses for damage.

4 Wiring

Warning!
- The electrical connection must only be carried out by a certified electrician.
- Technical personnel must have read and understood the instructions in this manual and must adhere to them.
- Ensure that there is no voltage at the power cable before beginning the connection work.

4.1 Wiring diagram

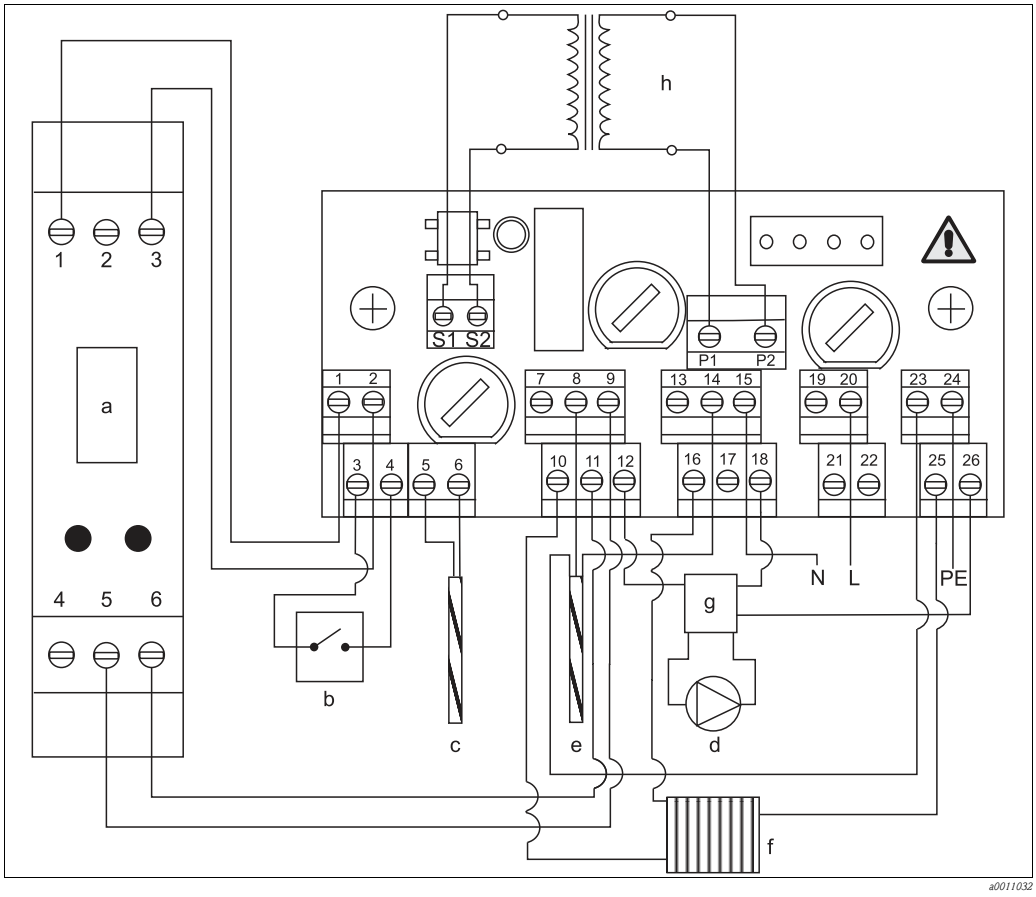

Fig. 14: Wiring diagram

a	*Timer*	*d*	*Pump*	*g*	*Pump line filter*
b	*Micro thermostat 24 V*	*e*	*Electric band heater (pressure side of the pump)*	*h*	*Transformer*
c	*Filtrate hose heater 24 V (suction side of the pump)*	*f*	*Housing heater*		

T[1)]	Assignment	T[1]	Assignment	T[1]	Assignment
1	24 V to timer terminal 1	10	Phase L housing heater	19	not connected
2	24 V to timer terminal 3	11	Phase L from control terminal 6	20	Phase L mains supply
3	24 V to micro thermostat	12	Phase L pump line filter	21	not connected
4	24 V from micro thermostat	13	not connected	22	not connected
5	24 V to hose heater	14	Electric band heater zero cond.	23	PE electric band heater
6	24 V from hose heater	15	Mains supply zero conductor	24	PE mains supply
7	not connected	16	Housing heater zero conductor	25	PE housing heater
8	Phase L electric band heater	17	not connected	26	PE pump line filter
9	Phase L to control terminal 5	18	Pump line filter zero conductor		

1) T = terminal

For power supply:
You have to connect terminals 15, 20 and 24.
All other connections have been made at the factory.

For electric band heater connection:
You have also to connect terminals 8, 14 and 23 if using an electric band heater for the sample line to the analyzer (pressure side of the pump).
The heater for the hose to the suction side is included in versions CAT430-****A**. The connections (terminals 5 and 6) have been made at the factory.

4.2 Power supply connection

Caution!
- A suitable circuit breaker must be provided by the customer. It must be placed directly upstream of the supply cable for the device.
- The device's power cable must be protected with a 30 mA error current protective switch (Ground Fault Circuit Interrupter, GFCI).

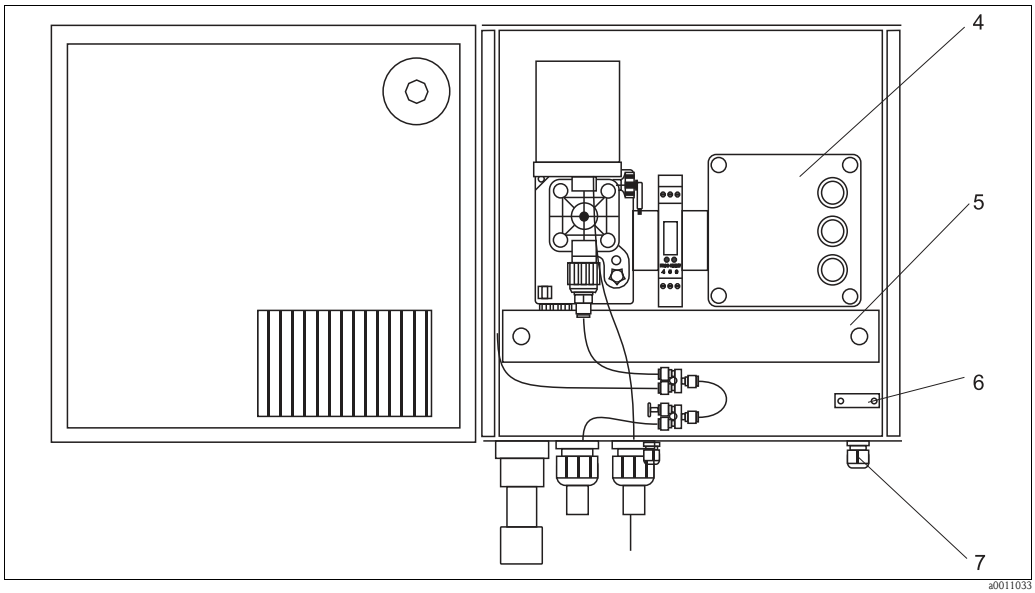

Fig. 15: Control box

4 Control unit with connection box inside
5 Cable duct
6 Strain relief for power cable
7 Cable gland for power cable

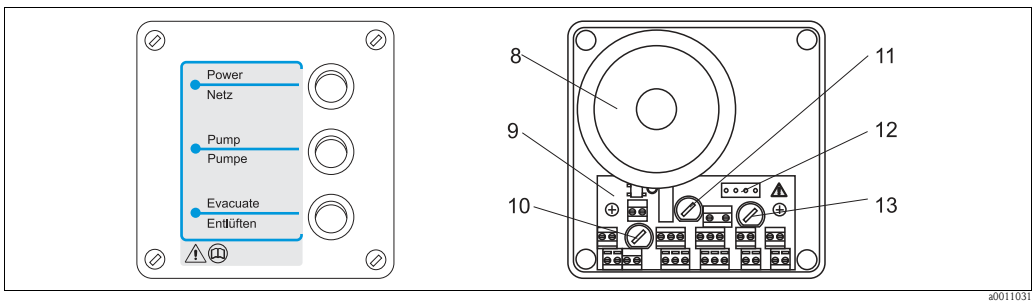

Fig. 16: Connection box: left cover, right inside the box

8 Transformer 24 V / 2A
9 Terminal block
10 Safety fuse for 24 V circuit 2.5 A 5 x 20 mm (0.20 x 0.79")
11 Safety fuse for pump 0.5 A 5 x 20 mm (0.20 x 0.79")
12 4-pole connection
13 Safety fuse for entire device 2.5 A 5 x 20 mm (0.20 x 0.79")

1. First of all, remove the cover on the cable duct (→ 15, item 5) and screw the cover of the connection box on (item 4).
2. Disconnect the 4-pole connection (→ 16, item 12) between the cover and terminal block and secure the cover.
3. Guide the power cable through the cable gland (→ 15, item 7) into the pump box. Pull the cable from below right through the cable duct and into the connection box.
4. Shorten the cable to the appropriate length and remove the sheathing to a length of 40 mm (1.58").
5. Connect the wires to terminals 15, 20 and 24 (→ 14).
6. Secure the cable with the strain relief (→ 15, item 6).

4.3 Connection of an optional hose heater

If not connected at the factory:

1. Pull the cable of the 24 V hose heater from the left through the cable duct and into the connection box.
2. Connect the wires to terminals 5 and 6 (→ 14).
3. Pull the supply lead of the orange thermal switch on the electric band heater from the left through the cable duct to the connection box.
4. Shorten the cable to the appropriate length and remove the sheathing to a length of 40 mm (1.58").
5. Connect the wires to terminals 8, 14 and 23.

4.4 Post-connection check

Checks	Remarks
Supply voltage matches the specifications on nameplate?	230 V AC / 115 V AC
The mounted cables slack and not twisted?	
Is the strain relief for the power cable correctly installed?	
All the cable entries installed, tightened and sealed?	
All cable entries mounted downwards or sideways?	cable loops downwards: water drains off
Are the covers of the cable duct and connection box correctly installed and the securing screws tightened?	The connection box and cable duct must not be accessible without the use of a tool.

5 Operation

5.1 Operation and commissioning

The following chapters provide you with information on the sample preparation unit's operating elements and explain how to make settings.
In Chap. 6, “Commissioning”, you will find the procedure for initial start-up and for daily operation.

5.2 Display and operating elements

Main switch

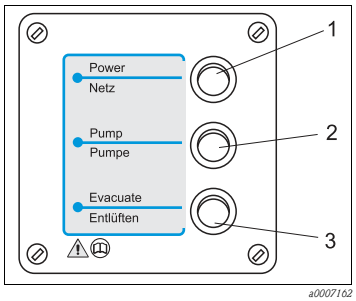

1 *Heating / Power on*
2 *Control*
3 *Suction hose evacuating (pump runs at continuous operation)*

Fig. 17: Cover of connection box

Timer

The timer is a time relay of "Trumeter 7955 X" type. When CAT430 is delivered, the timer is ready to use installed and connected.
Please refer to the following figure for information only.

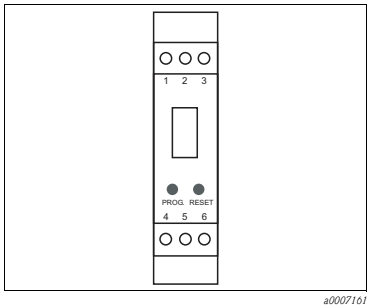

1 *terminal 1*
3 *terminal 2*
5 *terminal 9*
6 *terminal 11*
2,4 *not connected*

Fig. 18: Trumeter 7955 X

5.3 Local operation

5.3.1 Cycle times

For reliable operation and achievement of long rinsing intervals, sufficient pause times between the pumping times are necessary.
The pause times depend on the number of filter elements and on the pumping parameters for supply output and speed.
The factory-set values for pumping (On) and pause times (Off), as well as the fluid quantities per pumping cycle are displayed in the following table.

Number of filter elements	On / Off [s]	Fluid quantity per cycle [ml]
1	10 / 50	5

Number of filter elements	On / Off [s]	Fluid quantity per cycle [ml]
2	20 / 40	10

Note!
In principle, you can make other settings for the cycle times.
Extending the pump time with constant pause times tends to result in shorter rinse intervals. You should check whether this is acceptable for your application.

5.3.2 Pump capacity

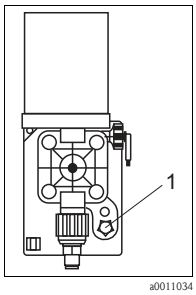

Fig. 19: Pump

You can change the pump's stroke frequency using the rotary knob at the bottom right on the pump housing (→ 19, item 1).
The pointer of the rotary knob is set to one o' clock with the factory setting.
Turn the knob clockwise to increase the fluid quantity.

5.3.3 Timer setting

During operation of the CAT 430, the "Trumeter 7955 X" display shows the respective operating status (relay symbol on = pumping, off = pause) and the remaining time until switching over to the next operating status.
During programming, the current settings for pumping and pause are displayed.

1. Hold down the **"PROG"** key until the countdown (3-2-1-0) is completed and **"RC"** (without any additional symbols, i.e. not "RC=" or something else) appears in the display.
   If **"RC"** does not appear after the countdown, keep pressing **"PROG"** until **"RC"** appears.

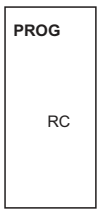

2. Press **"RESET"**.
3. *"0 SEC"* (SEC under the number) appears on the right of the display.
4. Press **"RESET"** again.
5. A three-digit value for seconds now appears in the display. The last figure flashes. Here, you can configure the *Operating time* of the pump.
6. Pressing **"PROG"** increases the flashing figure one at a time, with **"RESET"** you can switch to setting the next figure.

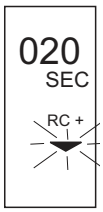

7. Set the desired value for the pumping time.
8. After setting the value for the third figure, press **"RESET"** again.
   The setting for another three-digit value appears. Here, you can set the *Pause time*.
9. Proceed exactly as with the pumping time configuration.
10. Pressing **"RESET"** after setting the third figure, the *"LEU"* message appears in the display. The time controller is activated as soon as voltage is supplied to the relay.
11. Keep pressing **"RESET"** until the relay icon appears in the display again.
    The programming procedure is completed.
12. Now switch the middle switch (controller) on the connection box off and on again.
    The controller starts.



6 Commissioning

6.1 Function check

Caution!
Check that all connections have been made correctly. Especially check that all hose connections are firmly attached, so that no leakages occur.
Take care of the hose connections at the diaphragm pump and check the splash water cap is installed.

6.2 Switch-on

6.2.1 Initial start-up

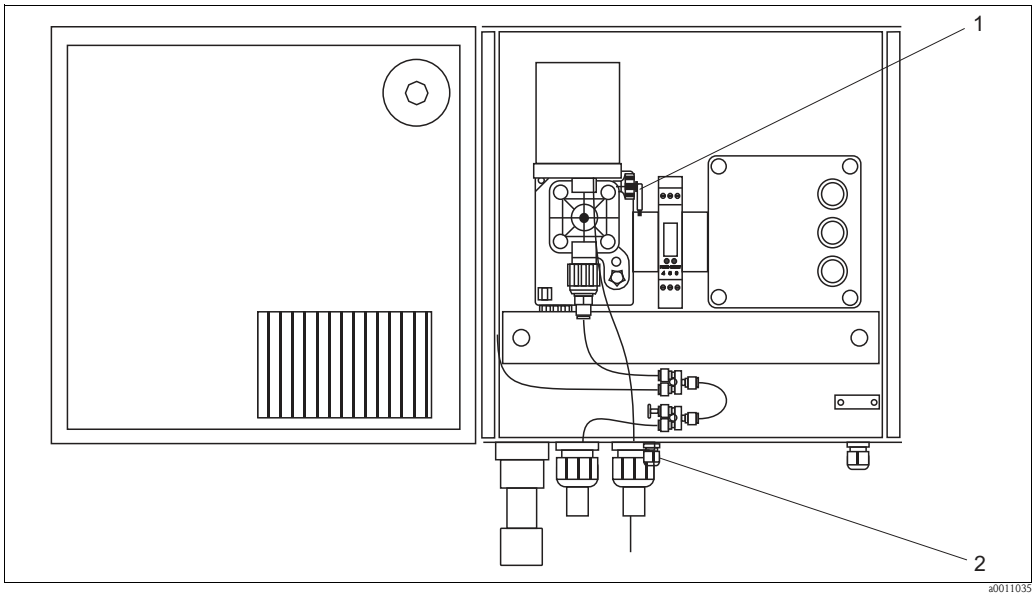

Fig. 20: Control box

1 Vent screw hose nozzle
2 Vent hose gland

1. Remove the drain plug from the hose gland for the vent hose (→ 20, item 2).
2. Push one end of the supplied vent hose (PVC 6/4 mm) up through the hose gland and fit it on the hose nozzle of the vent screw (item 1).

Caution!
Ensure that the other end of the vent hose is hung up so that the sample being delivered cannot cause any damage.
If necessary, shorten the hose.

6.2.2 Power switch

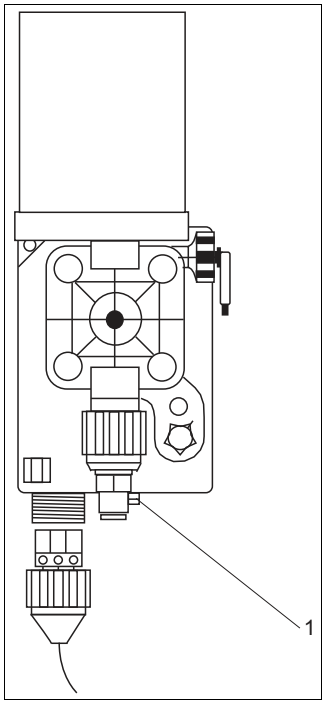

Fig. 21: Pump

1 Flip switch

Ensure that the flip switch on the underside of the pump is switched on (→ 21).

You use the rocker switches on the connection box for the actual switching operations:

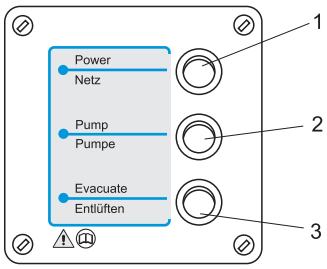

- Power switch (1)
  Switches on the housing heater, the timer and heater cable in the filtrate line
- Pump switch (2)
  Activates the pump, starts operation with factory settings (initial start-up) or with individual settings
- Evacuate switch (3)
  Continuous operation of the pump, evacuates the filter elements and filtrate line

Note!
- To start the entire system immediately, switch on "Power" and "Pump".
- Note that, when "Pump" is switched on, the pump only starts to feed with the next switching phase of the timer.

Caution!
- If you are starting the machine in frosty conditions, only switch "Power" on first. Wait approx. 30 minutes before you start the pump. This time is needed to bring the filtrate hoses and the pump box above 0 °C (32 °F).
- Continuous operation of the pump (lower switch) is necessary above all for degassing the filter elements and the filtrate hoses. Switch continuous operation on for approx. 10-15 minutes during commissioning. The vacuum at the manometer must not be larger than 0.4 bar (6 psi). Otherwise, stop continuous operation and switch it on again when there are many air bubbles in the filtrate hose.

Switch-on

1. Switch on the "Power" switch.
2. Switch on "Evacuate".
3. Open the vent screw by turning the knurl counter-clockwise.
4. Wait until the flow of sample supplied from the vent hose is free of bubbles.
5. Set the "Evacuate" switch back to "0" (off).

Caution!
After commissioning, always switch "Evacuate" off. Otherwise the filter plates will become clogged in a short period of time.

6.3 Checking the sample transportation

1. Close the vent screw (turn clockwise).
2. Measure the time that the sample requires from switching on the pump until arriving in the collecting vessel at the measuring devices.

This time is the minimum delay time that passes between taking the sample and measurement. You shorten the delay time by extending the operating time or stroke frequency of the pump.

Note!
At the same cycle duration, the delay time drops by a third when the operating time is increased by 50%.

6.4 Checking the sampling quantity

1. Measure the sampling quantity.
   To do this, place a 100 ml (3.4 fl.oz.) measuring cup under the filtrate hose (→ 22, item 5). Measure the amount of sample that is supplied within the period of 10 minutes.
2. Calculate the filtrate output per hour.
   Depending on the number of filter elements (one, two or four), the filtrate output must be at 250 or 500 ml/h (0.065 or 0.13 gal/hr).
3. If necessary, correct the filtrate output by extending the operating time and/or stroke frequency of the pump.

Note!
Once you have completed the checks, you can remove the vent hose and insert the drain plug back in the hose gland.

6.5 Setting the collecting volume

In the following figure the collecting vessel is shown on the measuring device side.

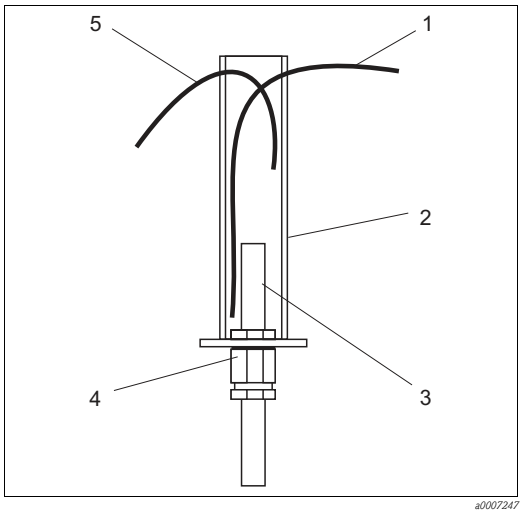

1 Measuring device suction hose
2 transparent PP cylinder
3 PE overflow hose
4 Hose gland
5 Filtrate hose from the pump box

Fig. 22: Collecting vessel (measuring device side)

The overflow hose (pos. 3) must be set such that the measuring devices suck just enough sample out of the collecting vessel within a pumping cycle that the bottom is still covered and thereby no air is sucked in.
For measuring devices working intermittently the collecting volume must always be larger than the amount that can be sucked in by the measuring device in one go.

This is how to set the collecting volume:

1. Loosen the hose gland (4).
2. Set the length of the overflow hose (3) in the collecting vessel such that the desired volume is reached.
3. Tighten the hose gland again and check that it is leakage-resistant.



Note!

- If you use CAT430 for preparing samples for analyzers of the CA71 series, please use the collecting vessel of the analyzer with or without level monitoring.
- If a nitrate sensor with flow assembly is installed in the filtrate line, you have to install the collecting vessel after the nitrate sensor.

7 Maintenance

7.1 Maintenance activities

All maintenance activities that have to be carried out during normal operation are described below.

7.1.1 Cleaning the filter elements

1. Switch the pump off first (middle switch on the connection box) and then pull the entire filter unit out of the water by the chain.
2. Hang the chain up on the rail or another suitable place so that you prevent the filter unit from falling back into the basin.
3. Now wash down the filter membranes with a water hose. The cleaning effect can be seen when the brownish coating dissolves from the bright membrane surface.

Caution!
Danger of damaging of the membrane due to false treatment!
It is best to use a garden hose with a spray nozzle to wash down the filter elements. If a firehose is used, set the stream somewhat wider in order to avoid damaging the filter elements.
If no water supply is available, a high-pressure cleaner with water canister can also be used to wash down.

4. After washing down, check whether the membrane is damaged.
5. Finally, lower the filter unit back into the basin by the chain. Ensure that the filter elements are completely under the water level again.

Normally, no chemicals are required for cleaning the filter elements. At measuring points with a high grease and protein content, however, it can be necessary to treat the membranes from time to time with chemicals.

Warning!
Danger of chemical burns on eyes and skin!
The following operations must only be carried out by personnel trained in use of chemicals and authorized by the plant operator.
Be sure to wear protective gloves and protective goggles when handling hydrochloric acid (HCl) and hydrogen peroxide (H_2O_2).

Use a mixture of 200 ml (6.8 fl.oz.) 30% H_2O_2, 1 l (34 fl.oz.) water and 30 ml (1 flo.oz.) concentrated HCl:

1. Wash the filter elements down first with water.
2. Then spray the solution onto the filter elements with a plastic watering can with spraying nozzle.
3. Repeat the procedure three times at intervals of 5 minutes.

Caution!
Ensure that the filter membranes do not dry out because otherwise they will be irreparably destroyed!

4. Then wash the filter elements down again with water and lower the filter unit into the basin again by the chain.

The time interval between two rinses depends to a great extent on the condition of the wastewater. At the outlet of a normal working sewage treatment plant the interval can be assumed at least 5 weeks , if the operating time of the pump compared to the values in the table in chapter "Local operation/Cycle times" is not considerably increased. In summer, however, it can even be a number of months.

7.1.2 Storage of filter elements

The membrane of all used filter elements must be kept wet.
Use the optional transportation box (—> accessories) to store filter elements safely.

7.1.3 Evacuating the pump

Air bubbles can occur in the dosing head of the pump after installing a new filter element or in the event of vacuum pressure as of 0.6 bar (9 psi). The air bubbles have an impact on the filtrate feed and must be removed.

Note!
A large vacuum pressure can be caused by build-up on the filter elements. For this reason, check and clean the filter elements first, if necessary.

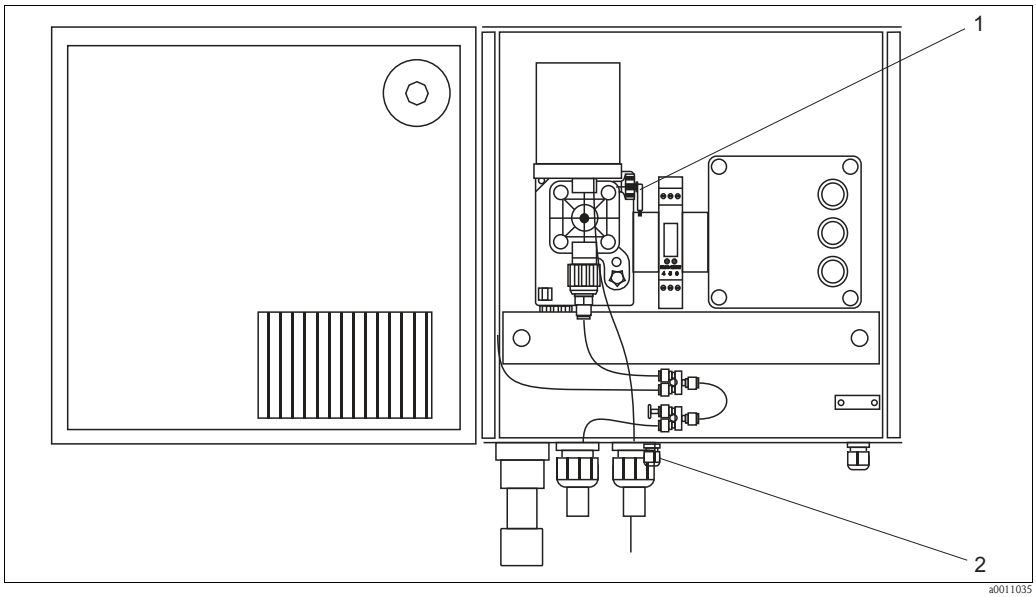

Fig. 23: Control box

1 Vent screw hose nozzle
2 Vent hose gland

1. Remove the drain plug from the hose gland for the vent hose (→ 20, item 2).
2. Push one end of the supplied vent hose (PVC 6/4 mm) up through the hose gland and fit it on the hose nozzle of the vent screw (item 1).

Caution!
Ensure that the other end of the vent hose is hung up so that the sample being delivered cannot cause any damage.
If necessary, shorten the hose.

3. Open the vent screw.
4. Switch "Evacuate" on and run the pump until no more air bubbles come out of the filtrate line from the filter elements.
5. Close the vent screw again.
6. Switch "Evacuate" off.

Note!
If necessary, you can leave the vent hose connected.
Otherwise, remove it and insert the drain plug back into the threaded joint of the control box.

7.1.4 Replacing filtrate hoses

In the course of a few months a coating builds up in the transparent PVC filtrate hoses in the control box despite ultra filtration. It is not worth cleaning them. Replace the hoses as described below.

1. Switch the controller off.
2. Pull all transparent hoses out of the black PP plug-in connectors, by pressing the retaining ring of the respective plug-in connector against the pull out direction of the hose into the connector.
3. Cut hose pieces to the right size, according to the old hoses, out of the 4/2 mm (0.16/0.08 inch) PVC hose.
4. Slide the ends of the hose all the way into the plug-in connectors.
   When inserting the hoses into the O-ring seals, a pressure point must be overcome.

Should the filtrate hoses become dirty again after a short time, it is possible that a filter element is defective and must be replaced.

7.1.5 Rinsing the sample hose between control box and measuring devices

In the course of time, a coating also builds up in the sample hose between the control box and measuring devices, that can result in nitrification and slurring effects. Consequently, this leads to incorrect measurement results.
This is especially the case for the version with compressed air sample transportation.
To prevent these effects, the filtrate hose must chemically be rinsed approx. every 6 weeks.

⚠ Warning!
Danger of chemical burns on eyes and skin!
The following operations must only be carried out by personnel trained in use of chemicals and authorized by the plant operator.
Be sure to wear protective gloves and protective goggles when handling hydrochloric acid (HCl) and hydrogen peroxide (H_2O_2).

Use a mixture of 200 ml (6.8 fl.oz.) 30% H_2O_2, 1 l (34 fl.oz.) water and 30 ml (1 flo.oz.) concentrated HCl:

1. Switch all of the connected measuring devices to standby mode.
2. Disconnect the hose (item 2) from the pump's suction side (item 1):

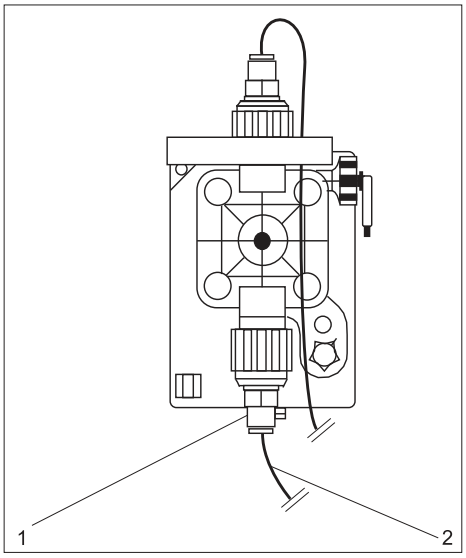

3. Instead of the suction hose, connect the 50 cm (1.6 ft) long PE hose and insert the other end of this hose in a 500 ml (17 fl.oz.) bottle of cleaning solution.
4. Leave the CAT430 run for 20-30 minutes with the cleaning solution.
5. Then remove the PE hose once more and reconnect the suction hose to the plug-in connector of the pump.

6. Leave the CAT430 run for another 20 minutes with filtrate, until the cleaning solution has been completely removed from the system.
7. Switch on the measuring devices once again.

7.2 Repairs

The repairs that have to be carried out on damaged CAT430 components are described below.



Warning!
Work on electrical components must only be carried out by authorized and trained technical personnel.
Before beginning work, switch the factory-fitted fuses for the complete equipment off.

7.2.1 Replacing a filter element

The filter element membranes have a service life of approx. 2 years, depending on operating conditions. After this time or in case of mechanical damage, the membrane becomes permeable to contamination. This can be detected by turbidity of the sample and by strong soiling in the relevant PVC filtrate hose or in the corresponding duct of the filtrate Y-piece in the control box. In this case, the defective filter element(s) have to be replaced.

Proceed as follows:

1. Switch off "Control" on the connection box.
2. Pull the filter unit out of the water and rinse the entire unit thoroughly with a jet of water.
3. Check the membranes for mechanical damages, such as scratches, cracks or separations of the membrane layer from the carrier layer. In these cases, you must replace the filter element.
4. Pull the filtrate hose of the affected filter element out of the threaded elbow joint on the reverse side of the element.
   Press the retaining ring of the hose gland against the pull out direction of the tube.
5. Loosen both PVC screw caps on the front side of the element.



Caution!
Do not allow the coupling nut or filter element to fall into the activated sludge basin.

6. The defective filter element can now be easily removed and replaced with a new one.
7. Mount the new filter element as described in Chapter "Installation instructions".

7.2.2 Replacing the device fuses

On the terminal PCB in the connection box, there are three circuit fuses 5x20 mm (5x0.79 inch) that melt in case of an increased current flow (see "Wiring diagram").
Before replacing a fuse, it must be determined what caused the fuse to blow.



Warning!
Determining what caused the fuse to blow must only be carried out by authorized and trained technical personnel.
Before beginning work, switch the factory-fitted fuses for the complete equipment off.

To replace a fuse, proceed as follows:

1. Unscrew the four plastic screws on the corners of the connection box cover and remove the cover.
2. Press the screw cap of the fuse and turn it approx. 45° counter-clockwise.
3. Remove the fuse and replace it with another one. Screw the cap back on.
4. Screw the cover of the connection box back on.
5. Switch the equipment back on and check that the CAT430 functions properly.

7.2.3 Replacing the timer

It is assumed that the timer is defective if, despite mains voltage being present and the middle switch on the connection box being switched on, the display is blank or the relay for the pump does not switch on as intended in the cycle.

Warning!
Before replacing the timer, be sure to switch the factory-fitted fuses for the entire equipment off.

1. Loosen all wires from the terminals on the timer.
2. The timer is mounted on a top-hat rail.
   Loosen the timer from the top-hat rail by pulling a flap on its underside with a screwdriver.
3. Simply slide the new timer onto the top-hat rail.
4. Connect the new timer (see "Display and operating elements").

Caution!
The timer contains lithium batteries and must be disposed as electronic scrap. In any case, it must not end up in the household waste.

7.2.4 Cleaning and replacing check valves

Note!
Only use genuine spare parts.

Crystalline build-up on the ball seat of the check valves has an impact on the feed capacity of the diaphragm pump.
Rinsing the filtrate hose between the control box and the device(s) should eliminate this build-up. If the pump still does not feed correctly after rinsing and at full stroke frequency (rotary knob at right limit stop), you have to remove the valves and replace them if necessary.

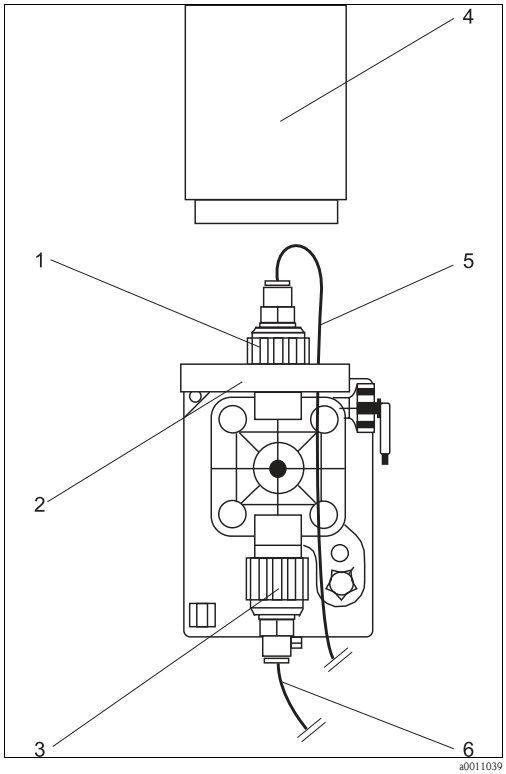

Fig. 24: Diaphragm pump

1 Pressure connection coupling nut
2 Splash protection base
3 Suction side coupling nut
4 Splash protection cap
5 Pressure connection filtrate hose
6 Suction side filtrate hose

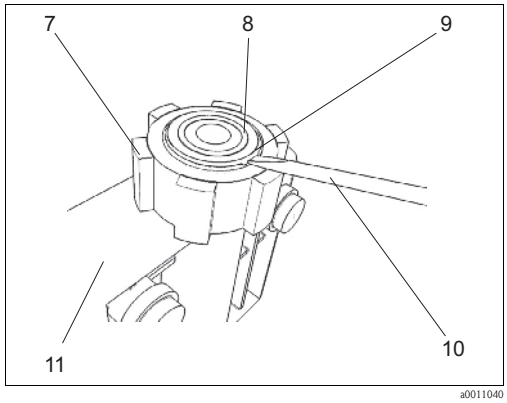

Fig. 25: Replacing the check valve

7 Knurled nut
8 Check valve
9 Groove
10 Screwdriver
11 Pump head

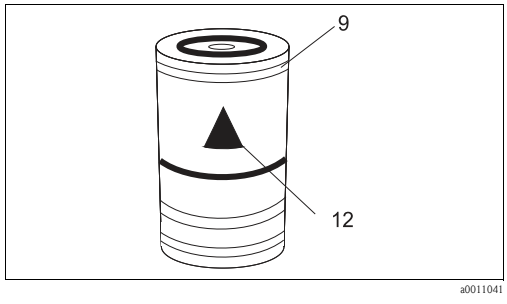

Fig. 26: Check valve

12 Arrow mark (flow direction)

Preparing for valve replacement

1. Switch off the pump.
2. Unscrew the splash protection cap (→ 24, item 4).
3. Pull the filtrate hoses (items 5 and 6) out of the plug-in connectors on the suction and pressure connection.
4. Unscrew the coupling nuts (items 1 and 3).
5. Remove the splash protection base (item 2) from the pressure connection.

Removing the check valve

6. Screw the supplied knurled nut (→ 25, item 7) on the pressure side so that the upper edge of the knurl is positioned at the recess at the level of the groove on the check valve (item 9).
7. Prize out the check valve by placing the screwdriver in the grooves and pressing against the upper edge of the knurled nut.
8. Retighten the knurled nut every so often when the valve is moving upwards.
9. Pull the valve out of the screw socket and remove the knurled nut.

Fitting a new check valve at the pressure connection

10. With the arrow pointing upwards (→ 26, item 11), push the valve all the way in the screw socket.
11. Mount the splash protection base.
12. Screw the coupling nut back on and tighten it well.

Installing new check valve at suction side

13. At the suction side, follow steps 6-9 in the same way as the pressure side, with the one difference that you press the valve downwards.
14. Push the new valve with the arrow pointing upwards in the screw socket.
15. Screw the coupling nut back on and tighten it well.

Restarting the pump

16. Insert the filtrate hoses on the pressure and suction side back into the plug-in connectors.
17. Screw the splash protection cap back on.
18. Switch on the pump.

7.2.5 Pump sealing

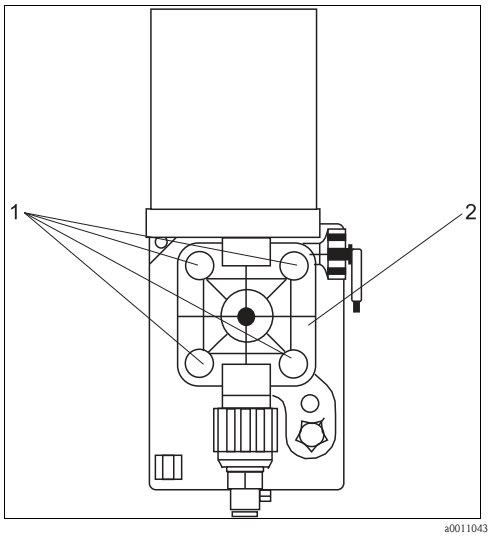

If filtrate leaks out of the leak bore on the underside of the pump head (item 2), there are two possible reasons:

a. The fixing screws (item 1) of the pump head have become loose.

b. The pump diaphragm is defective.

a) Fixing screws are loose

1. Remove the rubber caps from the fixing screws during operation.
2. Using an 8 mm socket wrench, carefully retighten the screws.
3. Check if liquid is still leaking out.
   If yes, the pump diaphragm is defective and must be replaced.
4. If no, fit the rubber caps back on the fixing screws.

b) Changing the pump diaphragm

1. Switch off the pump.
2. Remove the splash protection cap.
3. Remove the filtrate hoses from the plug-in connectors of the suction and pressure connection and, if necessary, the vent hose.
4. Remove the rubber caps from the fixing screws.
5. Loosen and remove all fixing screws (item 1).
6. Remove the pump head.
   You are now looking at the white membrane.
7. Unscrew the membrane by reaching to the side underneath and, with your thumb and index finger, turning it in a counter-clockwise direction away from the tie rod.
8. Replace the O-rings on the underside of the pump head and at the pump housing. You can use a small screwdriver to loosen the O-rings. However, ensure that you do not scratch the O-ring seat.
9. Screw a new membrane all the way on to the tie rod. Ensure that the membrane does not get jammed or over-tightened.
10. Fit the pump head back on and tighten it with the fixing screws.
11. Fit the rubber caps back on the fixing screws.
12. Re-insert the filtrate hoses into the plug-in connectors of the suction and pressure connection.
13. Screw the splash protection cap back on.
14. Switch on the pump.



Note!
Check for leak-tightness again. If the pump is still leaking, you have to replace the pump completely (see the following section).

7.2.6 Replacing the diaphragm pump

If the pump is still leaking or does not feed correctly despite all the measures described, you must replace the pump and send it in for repair.

Removing the pump

1. Switch "Power" and "Pump" off.
2. Unscrew the splash protection cap.
3. Remove the filtrate hoses from the plug-in connectors of the suction and pressure connection and, if necessary, the vent hose.
4. Open the cable duct and push the pump upwards out of the holder. You must overcome a pressure point in so doing.
5. Unscrew the coupling nut from the power connector on the underside of the pump and carefully pull the power connector at the cable out of the threaded nozzle.
6. Take the pump out of the control box.

Installing the new or repaired pump

1. Push the rubber seal over the power connector so that the recesses are positioned on top of the corners of the power connector.
2. Insert the power connector with rubber seal all the way in the threaded nozzle on the underside of the pump.
   Ensure that you guide the rubber seal correctly into the nozzle.
3. Screw the coupling nut on the nozzle.
4. Push the pump into the pump holder from above until it locks in place.
5. Switch on the flip switch on the underside of the pump.
6. Mount the cover of the cable duct and tighten the screws.
7. Insert the filtrate hoses into the plug-in connectors of the suction and pressure connection.
8. Screw the splash protection cap back on.
9. Switch "Power" and "Pump" on.
10. If necessary, evacuate the pump.

8 Accessories

Note!
In the following sections, you find the accessories available at the time of issue of this documentation.
For information on accessories that are not listed here, please contact your local service.

8.1 Filter element holders

Filter element holders
- with vertical retaining slide, for basin
  - 1.50 m (4.9 ft)
  - order no. 51511353
- with vertical retaining slide, for basin
  - 1.80 m (5.9 ft)
  - order no. 51511354
- with horizontal retaining slide, for open channel
  - 1.50 m (4.9 ft)
  - order no. 51511373
- with horizontal retaining slide, for open channel
  - 1.80 m (5.9 ft)
  - order no. 51511374

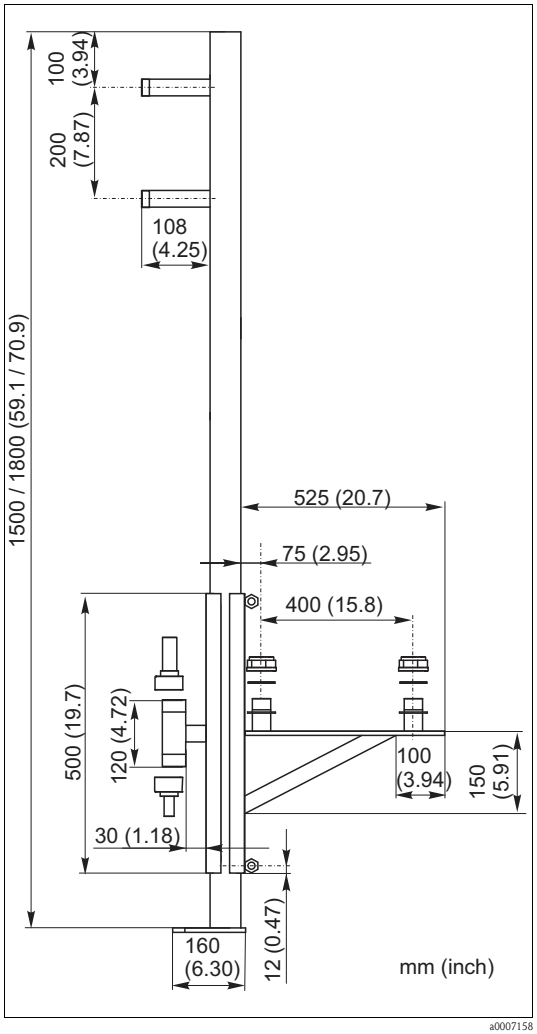

Fig. 27: Holder for open channel, side view

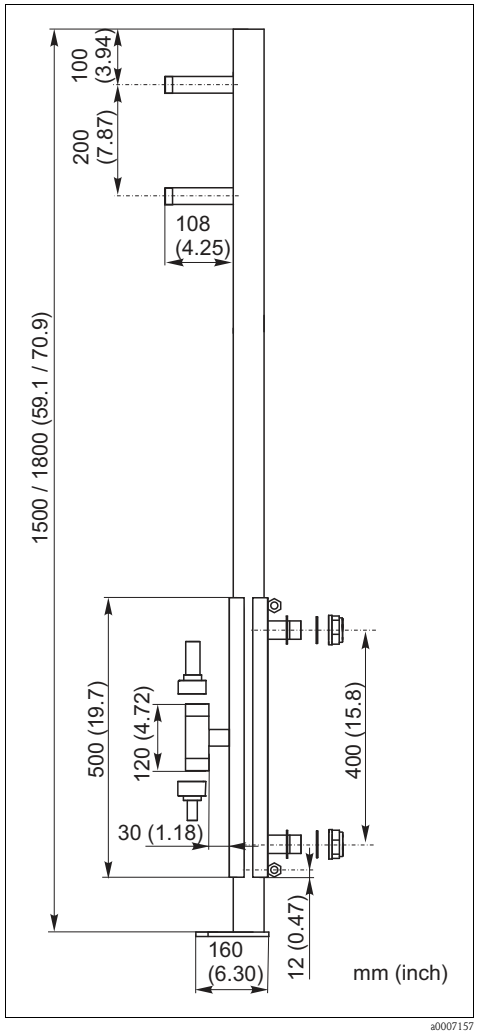

Fig. 28: Holder for basin, side view

8.2 Filter element accessories

Adapter
- for mounting a 2nd filter plate (2 adapters needed per filter plate)
- order no. 51511355

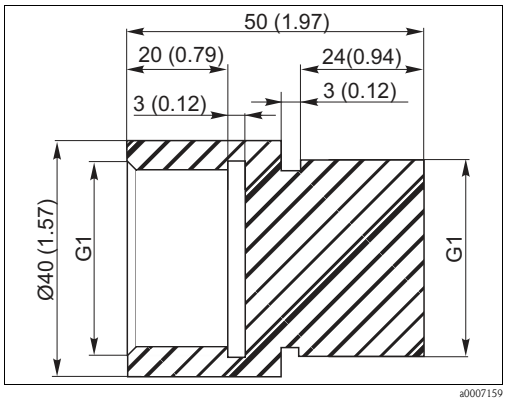

Fig. 29: Dimensions

Transportation box for filter elements
- for secure transportation resp. storage of 1 or 2 filter plates
- 500 x 400 x 50 mm (19.7 x 15.8 x 1.97 inch)
- oder no. 51512477

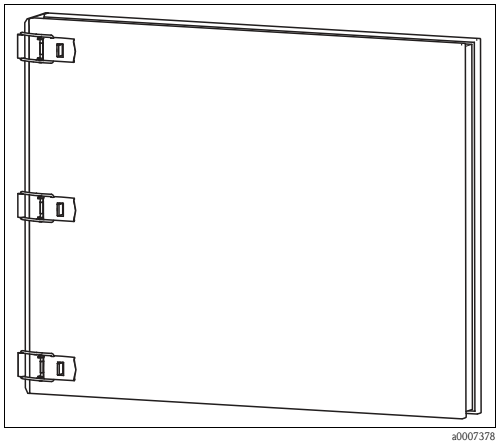

Fig. 30: Transportation box

9 Trouble-shooting

9.1 Trouble-shooting instructions

Although CAT430 is not very prone to faults due to its simple construction, problems can, of course, not be completely ruled out.
In the following table you can find, therefore, possible faults, their causes and possible fault eliminations.

Fault	Possible cause	Tests and / or corrective measures
No or too little filtrate	Pump not running	Ensure that the upper and the middle switches are at "ON" or "I" on the connection box and the lower switch at "OFF" or “0”.
		■ Did you wait for the next start-up phase of the timer? ■ Pump switched on? —> Flip switch on underside of pump ■ Was the timer restarted? No: Switch "Power" off and on again ■ 24 V AC between timer connections 1 and 3 (connection box, terminals 1 and 2)? No: Fuse 4 on terminal PCB blown? Replace. Yes: Controller running? If not, then replace timer. ■ 230 V between timer connection 5 and terminal 18? No: Check cable connection between connection 5 and terminal 9. ■ 230 V between timer connection 6 and terminal 18 when the relay is switched on (closed relay symbol in the display)? No: Timer defective, replace. ■ Switch on "Evacuate". 230 V between terminals 12 and 18? No: Check fuse 6 and replace if necessary? Voltage present, pump still not running? Replace pump!
	Pump running	■ Is the clock pulse frequency set correctly? ■ Is filtrate leaking at the pump head at the bottom? Tighten fixing screws or replace diaphragm. ■ Air in suction hose or pump head? Clean filter elements and vent pump. ■ No filtrate or too little? – Switch controller off. Disconnect the filtrate hose from the pressure side of the pump (top) and connect the supplied hose piece. – Switch on pump. Does filtrate come? – Measure the amount with a measuring beaker. – No filtrate or too little? Check the vacuum pressure at the pressure gauge! – No vacuum pressure or less than 0.2 bar? Build-up in the valves. First rinse and if this does not solve the problem take it apart, clean it and replace parts if necessary! – More vacuum pressure than 0.7 bar? Filter element or filtrate hose blocked! First clean filter element and if this does not help disconnect the filtrate hose from the threaded elbow joint on the rear of the filter element. – Vacuum pressure now 0? Replace filter element! – Vacuum pressure still more than 0.7 bar? Filtrate hose blocked! Causes are frost or soiling. Frost: see below. Soiling: Using the connection piece supplied, clear the filtrate hose with compressed air. ■ All checks listed above carried out and poss. faults rectified? Check the filtrate quantity fed. ■ Switch off controller, reconnect filtrate hose, switch on controller. Is the measured filtrate quantity reported at the devices? No: Frost or soiling in sample line to the measuring devices! Frost: see below. Soiling: replace the blocked filtrate hose.

Fault	Possible cause	Tests and / or corrective measures
Frost problems	Housing and filtrate line heater failure	Problems with the housing and filtrate line heater are evident when the filtrate hoses in the control box are frozen. A timer failure is also possible. This is how to check the housing heater: ■ 24 V between terminals 3 and 6? No: Check fuse 4 and replace if necessary? Still no: Transformer or cable connection to the transformer defective. Contact service dept.! ■ Remove the Micro thermostat between terminals 3 and 4 (24 V AC, safe). Jumper terminals 3 and 4 with a piece of wire. Housing heater switches on and is warm after approx. 1 min? The same with the heater cable in the filtrate line to the filter elements? No: Check for 230 V between terminals 10 and 16. If not, the relay switch on the PCB is defective. Contact service team! Yes: Heating element defective, contact service team! ■ The checks mentioned above are o.k. and still no housing heating? Micro thermostat defective, replace.
	Failure in sample line heater to the measuring devices	Problems with the sample line heater to the measuring devices are evident when the sample is not transported on from the control box to the measuring devices and all other causes mentioned above have been ruled out. ■ Check that the entire part of the sample line in danger of frosting over is heated by the electric band heater. Otherwise, a longer or an additional electric band heater must be used. ■ Check that the electric band heater has been connected correctly. ■ Is the orange thermal switch correctly attached to the pipe socket (see "Installation instructions")? Otherwise, the electric band heater heats up the thermal switch, which then does not switch properly. If the electric band heater is externally connected, the thermal switch must be in the open. ■ All of the checks mentioned above are o.k. and the hose is still frozen? Thermal switch defective, replace electric band heater.

9.2 Spare parts

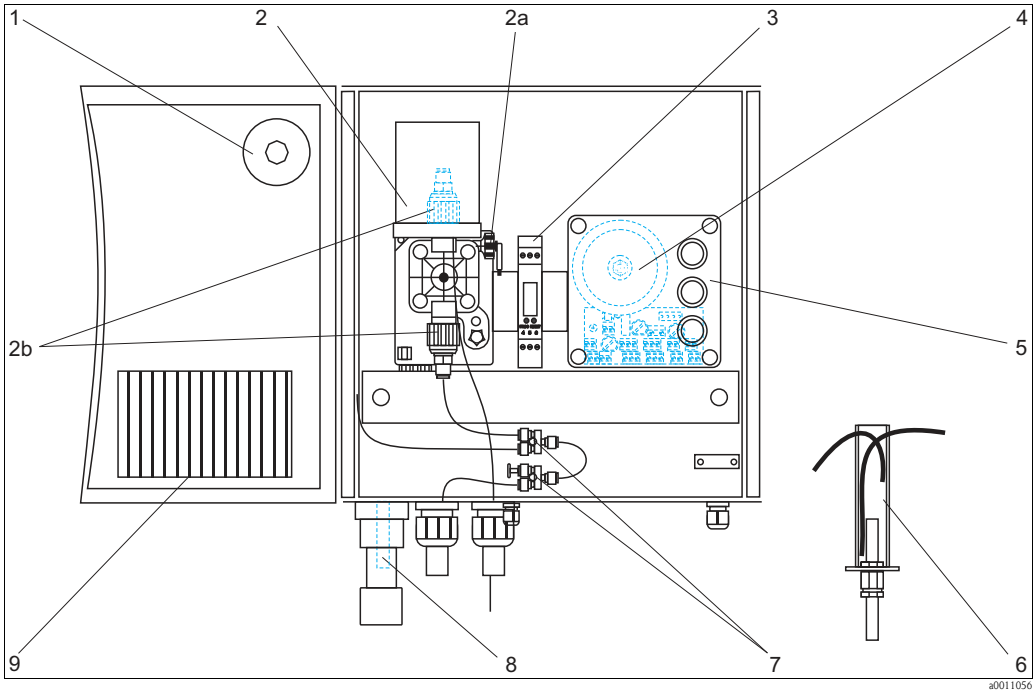

Fig. 31: Control box CAT430 and collecting vessel of CA7X

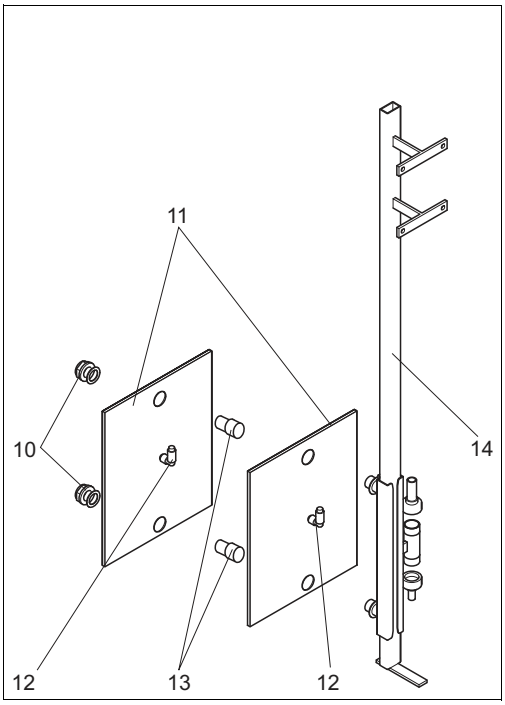

Fig. 32: Filter element holder for basin

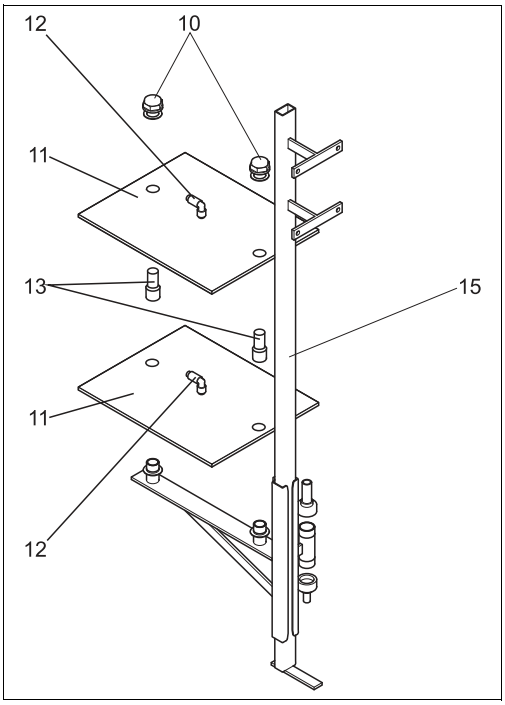

Fig. 33: Filter element holder for open channel

Note!
Please, find the ordering information to the spare parts from the following table.

Item	Spare part	Order code
1	Manometer with connector for CAT430	51509228
2	CAT430 conversion kit into diaphragm pump	71039524
2a	Kit CAT430: Exhaust screw for MP-OL5	71071974
2b	Kit CAT430: Cable gland with sealing for diaphragm pump MP-OL5	71064559
not in figure	Kit CAT430: Check valves for diaphragm pump	71064556
	Kit CAT430: Diaphragm set for pump	71064558
	Kit CAT430: Base plate for diaphragm pump	71064560
	Kit CAT430: Hose set for diaphragm pump	71064562
3	Timer for CAT430	51509229
4	Kit CAT430: Terminal board 230 VAC	71089347
	Kit CAT430: Terminal board 115 VAC	71089481
	Kit CAT430: Connection box 230 VAC with board + transformer, without cover	71089351
	Kit CAT430: Connection box 115 VAC with board + transformer, without cover	71089482
5	Kit CAT430: Cover complete, for connection box	71089348
6	Collecting vessel	51509238
7	Kit CAT430: Pneumatic connectors for diaphragm pump	71064561
8	Micro thermostat for CAT430	51509232
9	Housing heater	51509233
not in figure	Filtrate line with electric band heater, length 4.5 m (15 ft)	51509234
10	Securing nut for filter element	51509237
11	Filter element with threaded elbow joint	51509236

Item	Spare part	Order code
12	CAT430 filter element plug connector	51514278
13	Adapter G1 CAT430 for fixing a second filter element	51511355
14	Filter element holder with vertical retaining slide for basin ■ length: 1.50 m (4.9 ft) ■ length: 1.80 m (5.9 ft)	 51511353 51511354
15	Filter element holder with horizontal retaining slide for open channel ■ length: 1.50 m (4.9 ft) ■ length: 1.80 m (5.9 ft)	 51511373 51511374
not in figure	Retaining rope PA 8 mm (0.31 inch)	51509227
	Transportation and storage box for filter element	51512477
	CAT430 PE hose 4/2 mm (0.16/0.8 inch), length 25 m (82 ft)	51514281
	CAT430 PE hose 4/2 mm (0.16/0.8 inch), length 50 m (164 ft)	51514282
	CAT430 PE hose 4/2 mm (0.16/0.8 inch), length 100 m (328 ft)	51514283
	CAT430 PVC hose, clear, 4/2 mm (0.16/0.8 inch), length 2 m (6.6 ft)	51514284
	Filtrate line 20 m (66 ft), spiral hose with: – 1 filtrate hose PE 4/2 (0.16/0.8 inch) – 18 m (59 ft) electric band heater 230 V	51514285

9.3 Return

If the device requires repair, please send it *cleaned* to the sales centre responsible. Please use the original packaging, if possible.

Please enclose the completed "Declaration of contamination" (copy the second last page of these Operating Instructions) with the packaging and the transportation documents.
No repair without completed "Declaration of contamination"!

9.4 Disposal

The device contains electronic components and must therefore be disposed of in accordance with regulations on the disposal of electronic waste.
Please observe local regulations.

10 Technical data

10.1 Power supply

Control box connection	230 V AC, 50/60 Hz, 500 VA with band heater connected must be protected with a 30 mA error current protective switch (Ground Fault Circuit Interrupter, GFCI) A suitable circuit breaker must be provided by the customer. It must be placed directly upstream of the supply cable for the device.

10.2 Performance characteristics

Filtrate volume	approx. 250 ml/h (0.07 gal/hr) per filter element
Sample transportation distance	max. 20 m (66 ft)
Separation performance	Precipitation of particles, colloids and bacteria (> 0.1 µm)
Service life of filter element	approx. 1 to 2 years, maybe more if careful handled
Cleaning interval	Filter element: 2 to 6 months, depending on contamination level Sample line: 6 weeks
Chemical resistance	pH 1.5 to 12
Noise emission	< 70 dB

10.3 Environment

Ambient temperature	–20 to 40 °C (-4 to 100 °F)
Humidity	0 to 95 %, no splash water
Ingress protection	IP 54
Altitude	max. 2000 m (6500 ft) above sea level
Electromagnetic compatibility	Interference emission and interference immunity as per EN 61326: 2006

10.4 Process

Sample temperature	5 to 50 °C (40 to 120 °F)

10.5 Mechanical construction

Design, dimensions

see chapter 3

Weight

Control box with diaphragm pump	15 kg (33 lbs)
Housing CAT430-A1A*A4A	16 kg (35 lbs)
Filter element	1 kg (2.2 lbs)
Filter element holder	18 kg (40 lbs)

Materials

Control box housing and housing (CAT430-A1A*A4A)	Glass-fibre reinforced polyester, self-quenching acc. to ASTM D 635 resp. UL 94-VO
Filter element	PVC carrier plate, PAN membrane[1)]
Filter element holders	Stainless steel, 1.4301 (AISI 304)

1) PAN ... polyacryl nitrile

Index

A
Accessories
- Filter element accessories . . . 34
- Filter element holders . . . 33

Ambient temperature . . . 39

C
Certificates . . . 7
Checking
- Connection . . . 18
- Function . . . 21
- Installation . . . 15
- Sample transportation . . . 23
- Sampling quantity . . . 23

Chemical resistance . . . 39
Cleaning
- Check valves . . . 29
- Filter elements . . . 25
- Filtrate hose . . . 27

Cleaning interval . . . 39
Commissioning . . . 4, 21
Connection
- Control box . . . 39
- Hose heater . . . 18
- Power supply . . . 17

Control box . . . 12
Cycle times . . . 19

D
Declaration of conformity . . . 7
Delay time . . . 23
Design, dimensions . . . 40
Designated use . . . 4
Display . . . 19
Disposal . . . 38

E
Environment . . . 39
Errors . . . 35

F
Filter element accessories . . . 34
Filter element holders . . . 33
Filtrate volume . . . 39
Fuses . . . 28

H
Hose heater . . . 18
Humidity . . . 39

I
Icons . . . 5
Incoming acceptance . . . 8
Ingress protection . . . 39
Installation . . . 4, 8–9

L
Life cycle . . . 39

M
Maintenance . . . 25
Materials . . . 40
Mechanical construction . . . 40
Micro thermostat . . . 36

N
Nameplate . . . 6

O
Operation . . . 4, 19
Operational safety . . . 4
Ordering information . . . 6

P
Performance characteristics . . . 39
Power supply . . . 17, 39
Process . . . 39
Product structure . . . 6
Pump
- Changing the diaphragm . . . 31
- Evacuate . . . 26
- Tighten fixing screws . . . 31

Pump capacity . . . 20
Pump sealing . . . 30

R
Repairs . . . 28
Replacing
- Check valves . . . 29
- Device fuses . . . 28
- Diaphragm pump . . . 31
- Filter element . . . 28
- Filtrate hose . . . 27
- Timer . . . 29

Return . . . 4, 38

S
Safety icons . . . 5
Sample lines . . . 13
Sample temperature . . . 39
Sample transportation distance . . . 39
Scope of delivery . . . 7
Settings . . . 19
Spare parts . . . 36
Storage . . . 8
Switch-on . . . 21
Symbols . . . 5

T
Technical data . . . 39–40
Timer . . . 20, 29
Timer settings . . . 19
Transport . . . 8

U

Use 4

W

Weight 40
Wiring diagram 16

Endress+Hauser

People for Process Automation

Declaration of Hazardous Material and De-Contamination

Erklärung zur Kontamination und Reinigung

RA No. ☐☐☐☐☐☐☐☐

Please reference the Return Authorization Number (RA#), obtained from Endress+Hauser, on all paperwork and mark the RA# clearly on the outside of the box. If this procedure is not followed, it may result in the refusal of the package at our facility.

Bitte geben Sie die von E+H mitgeteilte Rücklieferungsnummer (RA#) auf allen Lieferpapieren an und vermerken Sie diese auch außen auf der Verpackung. Nichtbeachtung dieser Anweisung führt zur Ablehnung ihrer Lieferung.

Because of legal regulations and for the safety of our employees and operating equipment, we need the "Declaration of Hazardous Material and De-Contamination", with your signature, before your order can be handled. Please make absolutely sure to attach it to the outside of the packaging.

Aufgrund der gesetzlichen Vorschriften und zum Schutz unserer Mitarbeiter und Betriebseinrichtungen, benötigen wir die unterschriebene "Erklärung zur Kontamination und Reinigung", bevor Ihr Auftrag bearbeitet werden kann. Bringen Sie diese unbedingt außen an der Verpackung an.

Type of instrument / sensor
Geräte-/Sensortyp _____

Serial number
Seriennummer _____

☐ **Used as SIL device in a Safety Instrumented System /** *Einsatz als SIL Gerät in Schutzeinrichtungen*

Process data/ *Prozessdaten*

Temperature / *Temperatur*_____ [°F] _____ [°C]
Conductivity / *Leitfähigkeit* _____ [µS/cm]
Pressure / *Druck* _____ [psi] _____ [Pa]
Viscosity / *Viskosität* _____ [cp] _____ [mm²/s]

Medium and warnings
Warnhinweise zum Medium

	Medium /concentration *Medium /Konzentration*	Identification CAS No.	 flammable *entzündlich*	 toxic *giftig*	 corrosive *ätzend*	 harmful/ irritant *gesundheits-schädlich/ reizend*	 other * *sonstiges**	 harmless *unbedenklich*
Process medium *Medium im Prozess*								
Medium for process cleaning *Medium zur Prozessreinigung*								
Returned part cleaned with *Medium zur Endreinigung*								

* explosive; oxidising; dangerous for the environment; biological risk; radioactive
* *explosiv; brandfördernd; umweltgefährlich; biogefährlich; radioaktiv*

Please tick should one of the above be applicable, include safety data sheet and, if necessary, special handling instructions.
Zutreffendes ankreuzen; trifft einer der Warnhinweise zu, Sicherheitsdatenblatt und ggf. spezielle Handhabungsvorschriften beilegen.

Description of failure / *Fehlerbeschreibung* _____

_____

_____

Company data / *Angaben zum Absender*

Company / *Firma* _____

_____

Address / *Adresse*

_____

_____

Phone number of contact person / *Telefon-Nr. Ansprechpartner:*

_____

Fax / E-Mail _____

Your order No. / *Ihre Auftragsnr.* _____

"We hereby certify that this declaration is filled out truthfully and completely to the best of our knowledge.We further certify that the returned parts have been carefully cleaned. To the best of our knowledge they are free of any residues in dangerous quantities."

"Wir bestätigen, die vorliegende Erklärung nach unserem besten Wissen wahrheitsgetreu und vollständig ausgefüllt zu haben. Wir bestätigen weiter, dass die zurückgesandten Teile sorgfältig gereinigt wurden und nach unserem besten Wissen frei von Rückständen in gefahrbringender Menge sind."

_____ (place, date / *Ort, Datum)*

_____ Name, dept./*Abt.* (please print / *bitte Druckschrift*)

_____ Signature / *Unterschrift*

www.endress.com/worldwide

Endress+Hauser

People for Process Automation

BA338C/07/en/01.09
Printed in Germany / HD

71087238