DATA SHEET

T 8015-1 EN

Series 240 · Types 3241-1 PSA, -7 PSA, -9 PSA Pneumatic Control Valves

Type 3241 PSA Globe Valve · DIN version

Application

Control valves for PSA (Pressure Swing Adsorption) plants

Nominal size	**DN 15 to 150**
Pressure rating	**PN 10 to 40**
Temperatures	**-10 to +150 °C**

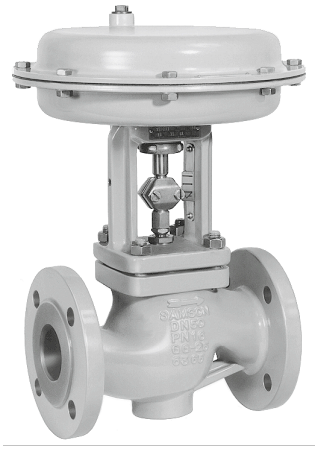

Type 3241-1 PSA
DN 15 to 80

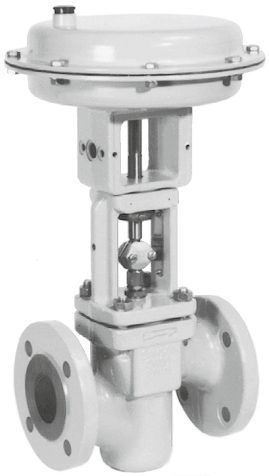

Type 3241-7 PSA
DN 15 to 80
Forged steel



Type 3241-9 PSA
DN 15 to 150

Special features

Type 3241 PSA Globe Valve operated with

- Type 3271 Pneumatic Actuator
  (Type 3241-1 PSA Control Valve)
- Type 3277 Pneumatic Actuator
  (Type 3241-7 PSA Control Valve) for integral positioner attachment
- Type 3275A Pneumatic Piston Actuator
  (Type 3241-9 PSA Control Valve)

Valve body made of

- Cast steel
- Cast stainless steel
- Cold-resisting cast steel
- Forged steel
- Forged stainless steel

Undivided valve bonnet

Valve plug

- Soft seal
- High-performance metal seal

Optional with RFID tags with unique identification according to DIN SPEC 91406.

The control valves with their modular design can be equipped with various accessories, such as positioners, limit switches, solenoid valves and other devices according to DIN EN 60534-6-1[1)] and NAMUR Recommendation (see Information Sheet ▶ T 8350).

[1)] Accessories required. See associated actuator documentation.

A safety manual containing the safety-related data is optionally available for use in safety-instrumented systems (SIL requirements).

SAMSON AKTIENGESELLSCHAFT
Weismüllerstraße 3 · 60314 Frankfurt am Main, Germany
Phone: +49 69 4009-0 · samson@samsongroup.com · www.samsongroup.com

Edition March 2023

Versions

Standard version for temperatures ranging from -10 to +150 °C

- **Type 3241-1 PSA** · DN 15 to 80 with Type 3271 Pneumatic Actuator (see Data Sheet ▶ T 8310-1)
- **Type 3241-7 PSA** · DN 15 to 80 with Type 3277 Pneumatic Actuator for integral positioner attachment (see Data Sheet ▶ T 8310-1)
- **Type 3241-9 PSA** · DN 15 to 150 with Type 3275A Pneumatic Piston Actuator for integral attachment of a positioner or limit switch (see Data Sheet ▶ T 8314-1)

Further versions

- **Flow divider** for cast valves for noise reduction in both directions of flow
- **ANSI version** · See Data Sheet ▶ T 8012-1
- **Versions with dimensions according to Japanese Industry Standard (JIS)** · See Data Sheet ▶ T 8012-2

Design and principle of operation

The process medium flows through the valve in both directions. The valve plug position determines the cross-sectional area between the seat and plug.

Depending on how the springs are arranged in the Type 3271 or Type 3277 Actuator (see Data Sheet ▶ T 8310-1), the valve has two different fail-safe positions that become effective when the supply air fails:

- **Actuator stem extends (fail-close):** The valve is closed upon air supply failure.
- **Actuator stem retracts (fail-open):** The valve is opened upon air supply failure.

The double-acting Type 3275A Piston Actuator does not have a fail-safe action (see Data Sheet ▶ T 8314-1).

The following diagrams show configuration examples.

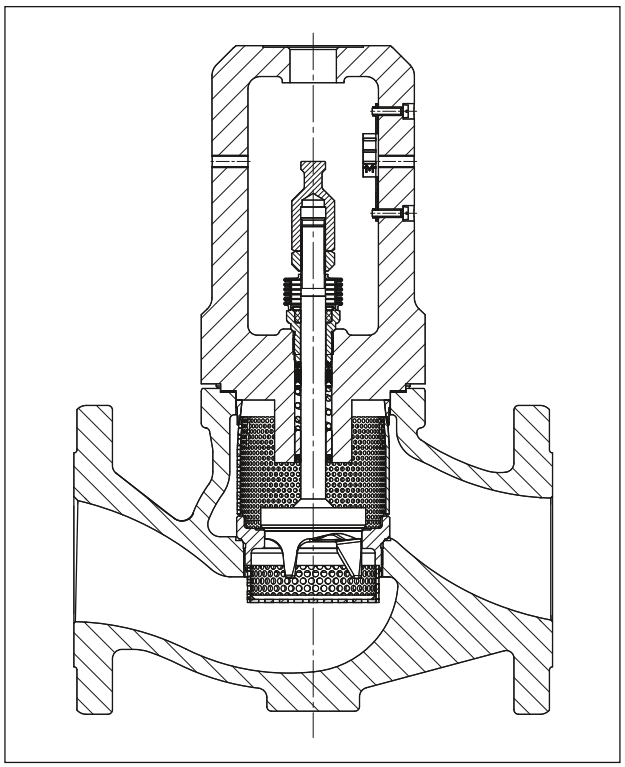

Fig. 1: *Type 3241 PSA Valve with flow divider ST 1 PSA*

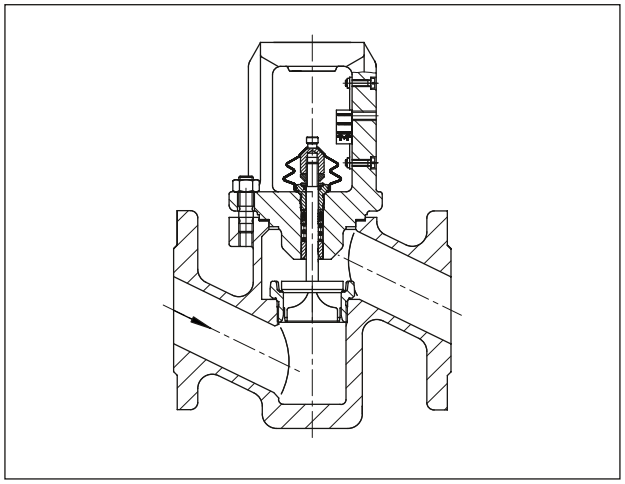

Fig. 2: *Type 3241 PSA Valve · Forged steel version · DN 15 to 80*

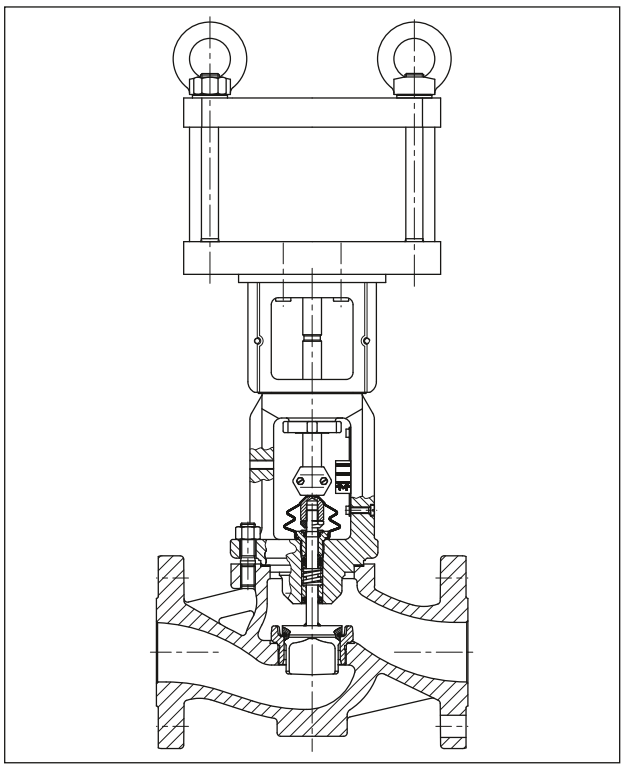

Fig. 3: *Type 3241 Valve with Type 3275A Pneumatic Piston Actuator (Type 3241-9 Control Valve)*

Table 1: *Technical data for Type 3241 PSA*

Nominal size		**DN**	**15, 20[1], 25, 32[1], 40, 50, 65[1], 80, 100, 125[1], 150**		**15 · 25 · 40 · 50 · 80**	
Material			**Cast steel GP240GH 1.0619**	**Cast stainless steel 1.4408**	**Forged steel P250GH 1.0460**	**Forged stainless steel 1.4404**
Pressure rating		PN	10 · 16 · 25 · 40			
Type of end connections		Flanges	All DIN versions			
Seat-plug seal			Soft seal · High-performance metal seal			
Characteristic			Equal percentage · Linear			
Rangeability			50:1 for DN 15 to 50 · 30:1 for DN 65 and larger			
Conformity			CE EAC			
Optional RFID tag			Application range according to the technical specifications and the explosion protection certificates. These documents are available on our website: ▶ www.samsongroup.com > Products > Electronic nameplate The permissible range for temperatures at the RFID tag is between -40 and +85 °C.			
Medium temperature in °C · Permissible operating pressures according to pressure-temperature diagram (see Information Sheet ▶ T 8000-2)						
Valve			-10 to +150			
Leakage class according to DIN EN 60534-4						
Valve plug	Soft seal		VI			
	High-performance metal seal		V			

[1] Nominal sizes on request

Table 2: *Materials*

Pressure rating	**PN 16 to 40**			
Valve body[1]	**Cast steel GP240GH 1.0619**	**Cast stainless steel 1.4408**	**Forged steel P250GH 1.0460**	**Forged stainless steel 1.4571**
Valve bonnet	1.0460	1.4401 · 1.4404[2]	1.0460	1.4571
Seat and plug	1.4006	1.4404	1.4406	1.4404
	Seal ring for soft-seated plug: PTFE with glass fiber			
Guide bushing	1.4104	1.4404	1.4104	1.4404
Packing	V-ring packing: PTFE with carbon · Spring 1.4310 with stem protective ring			
Body gasket	Graphite on metal core			

1) Special materials on request

2) Material double stamping

K_{VS} coefficients

Terms for control valve sizing according to DIN IEC 60534-2-1 and DIN IEC 60534-2-2: F_L = 0.95, x_T = 0.75

Table 3: *Overview with flow divider ST 1 PSA (K_{VS}-1)*

K_{VS}	**1.6**	**2.5**	**4.0**	**6.3**	**10**	**16**	**25**	**40**	**60**	**80**	**63**	**100**	**160**	**200**	**260**
K_{VS}-1	1.3	2	3.2	5	8	13	20	32	48	63	50	80	125	160	210
Seat Ø in mm	12			24		31	38	48	63	80	63	80	100	110	130
Travel in mm	15										30				

Table 4: *Versions without flow divider*

K_{VS}	**1.6**	**2.5**	**4.0**	**6.3**	**10**	**16**	**25**	**40**	**60**	**80**	**63**	**100**	**160**	**200**	**260**
DN															
15	•	•	•												
20[1]		•	•	•											
25			•	•	•										
32[1]				•	•	•									
40					•	•	•								
50						•	•	•							
65[1]							•	•	•						
80								•	•	•					
100											•	•	•		
125[1]												•	•	•	
150												•	•		•

1) Nominal sizes on request

Table 5: *Versions with flow divider ST 1 PSA (K_{VS}-1) · Cast valve bodies*

K_{VS}-1	1.3	2	3.2	5	8	13	20	32	48	63	50	80	125	160	210
DN															
15	•	•	•												
20[1)]	•	•	•												
25	•	•	•												
32[1)]				•	•	•									
40					•	•	•								
50						•	•	•							
65[1)]							•	•	•						
80								•	•	•					
100										•	•	•			
125[1)]												•		•	
150												•	•		•

[1)] Nominal sizes on request

Differential pressures

The possible differential pressures must be calculated on a case-by-case basis when using the Type 3271, Type 3277 and Type 3275A Actuators in combination with the Type 3241 PSA Valve depending on the given operating conditions.

Dimensions and weights

The tables below provide an overview of the dimensions and weights of the standard version of Type 3241 PSA Valve.

Dimensions in mm · Weights in kg

Table 6: *Dimensions for Type 3241 PSA Valve*

Valve	DN	15	20[4]	25	32[4]	40	50	65[4]	80	100	125[4]	150
Length L		130	150	160	180	200	230	290	310	350	400	480
H1		220	220	220	220	220	220	330[1]	330[1]	354[1]	363[1]	390[1]
H2[2] for	Cast steel	44[3]	44[3]	44[3]	72	72[3]	72[3]	98	98[3]	118	144	175
	Forged steel	53	–	70	–	94	100	–	132	–		

1) Add 65 mm to H1 when a Type 3275A Actuator with 804 cm² actuator area is mounted.

2) The H2 dimension is the distance from the middle of the flow channel to the bottom of the valve body.

3) The H2 dimension in this valve is not the lowest point of the valve. This valve's lowest point is the bottom of the connecting flanges. The flange dimensions comply with the corresponding flange standard.

4) Nominal sizes on request

Table 7: *Further dimensions[1] in combination with Type 3271 Pneumatic Actuator or Type 3277 Pneumatic Actuator*

Actuator area		cm²	120	175v2	350	350v2	355v2	750v2
Diaphragm ØD		mm	168	215	280	280	280	394
H[2]	Type 3271	mm	69	78	82	92	131	236
H[2]	Type 3277	mm	69	78	82	82	121	236
H3[3]		mm	110	110	110	110	110	190
H5	Type 3277	mm	88	101	101	101	101	101
Thread	Type 3271		M30x1.5	M30x1.5	M30x1.5	M30x1.5	M30x1.5	M30x1.5
Thread	Type 3277		M30x1.5	M30x1.5	M30x1.5	M30x1.5	M30x1.5	M30x1.5
a	Type 3271		G ⅛ (⅛ NPT)	G ¼ (¼ NPT)	G ⅜ (⅜ NPT)	G ⅜ (⅜ NPT)	G ⅜ (⅜ NPT)	G ⅜ (⅜ NPT)
a2	Type 3277		–	G ⅜[4]	G ⅜[4]	G ⅜[4]	G ⅜[4]	G ⅜[4]

1) The specified dimensions are theoretical maximum design values for a specific standard device configuration. They do not reflect every possible case of use. The actual values for individual devices may differ depending on the device configuration and the specific application.

2) Height including lifting eyelet or female thread and eyebolt according to DIN 580. Height of the swivel hoist may differ. Actuators up to 355v2 cm² without lifting eyelet or female thread.

3) Minimum clearance required to remove the actuator

4) An adapter G ⅜ to ⅜ NPT is available for the a2 connection. It can be ordered separately using the following article number: 100160362

Table 8: *Further dimensions in combination with Type 3275A Pneumatic Actuator*

Actuator area	cm²	314	380	490	804
Piston ØD	mm	268	288	318	405
H including lifting eyelet	mm	207	207	207	214
H3[1]	mm	110	110	110	580
H5	mm	102	102	102	–
Thread		M30x1.5	M30x1.5	M30x1.5	M60x1.5

1) Minimum clearance required to remove the actuator

Dimensional drawings

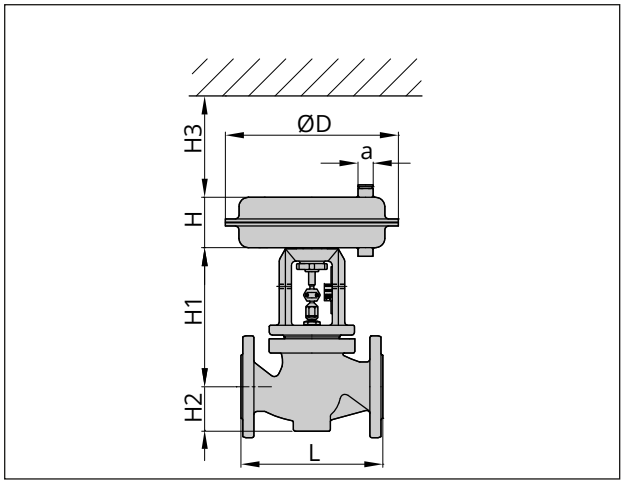

Fig. 4: *Type 3241-1 PSA (Type 3271 Pneumatic Actuator) up to nominal size DN 80/NPS 3*

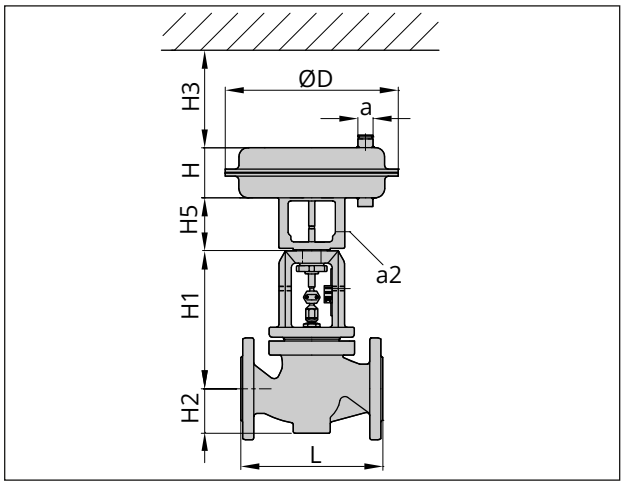

Fig. 5: *Type 3241-7 PSA (Type 3277 Pneumatic Actuator) up to nominal size DN 80/NPS 3*

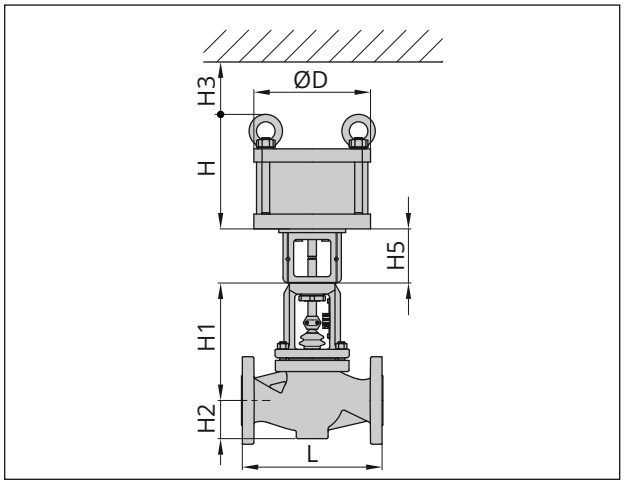

Fig. 6: *Type 3241-9 PSA, up to nominal size DN 150/NPS 6, with Type 3275A Pneumatic Piston Actuator (314/380/490 cm²)*

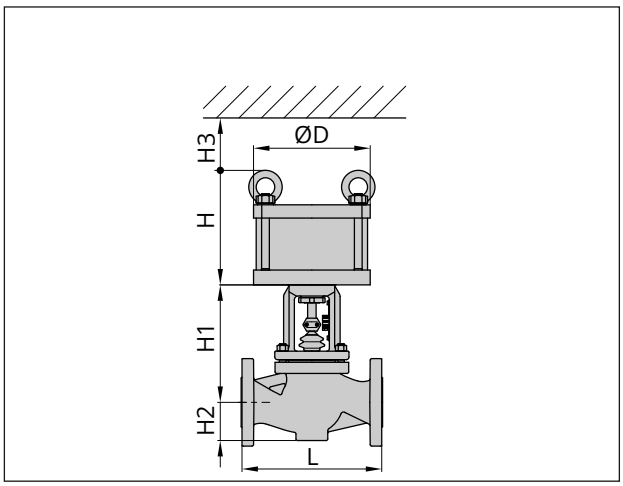

Fig. 7: *Type 3241-9 PSA, nominal sizes DN 100 to 150/NPS 4 to 6, with Type 3275A Pneumatic Piston Actuator (804 cm²)*

Table 9: *Weights for Type 3241 PSA Valve*

Valve	DN	15	20[2)]	25	32[2)]	40	50	65[2)]	80	100	125[2)]	150
Valve[1)] without actuator		5	6	1	11	12	15	24	30	42	80	120

1) The weights specified apply to a specific standard device configuration. Weights of other valve configurations may differ depending on the version (material, trim etc.).

2) Nominal sizes on request

Table 10: *Weights[1)] for Type 3271 and Type 3277 Pneumatic Actuators*

Type ... Actuator	Actuator area in cm²		120	175v2	350	350v2	355v2	750v2
3271	Without handwheel	kg	2.5	6	8	11.5	15	36
3271	With handwheel	kg	4	10	13	16.5	20	41
3277	Without handwheel	kg	3.2	10	12	15	19	40
3277	With handwheel	kg	4.5	14	17	20	24	45

1) The weights specified apply to a specific standard device configuration. Weights of other actuator configurations may differ depending on the version (material, number of actuator springs etc.).

Table 11: *Weights for Type 3275A Pneumatic Piston Actuator*

Actuator area	cm²	314	380	490	804
Weight (standard)	kg (approx.)	17	20	23	41
Weight (heavy duty)	kg (approx.)	56	62	68	106

Ordering text

Globe valve	Type 3241 PSA
Nominal size	DN …
Pressure rating	PN …
Body material	See Table 2
Type of end connections	Flanges
Seat-plug seal	Soft seal or high-performance metal seal
Characteristic	Equal percentage or linear
Pneumatic actuator	Type 3271, Type 3277 or Type 3275A
Fail-safe action	Fail-close or fail-open
Process medium	Density in kg/m³ and temperature in °C
Flow rate	in kg/h or m³/h in standard or operating state
Pressure	p_1 and p_2 in bar (absolute pressure p_{abs}), with minimum, normal and maximum flow rate
RFID tag	Yes/No
Valve accessories	Positioner/limit switch

Associated Information Sheets	▶ T 8000-X
Associated Data Sheets for Types 3271/3277 Pneumatic Actuators	▶ T 8310-1
Associated Data Sheet for Type 3275A Pneumatic Piston Actuator	▶ T 8314-1
Associated Mounting and Operating Instructions	▶ EB 8015