TI01396C/07/EN/02.20
71513418
2020-11-23

Technical Information
Memosens CPS77D

Sterilizable and autoclavable ISFET sensor for pH measurement



Digital with Memosens technology

Application

- Hygienic and sterile applications
- Food and pharmaceutical industry
- Biotechnology

Your benefits

- Break-resistant
  - Sensor body made entirely of PEEK (FDA compliant)
  - Can be installed directly in the process, saving time and cost for sampling and laboratory analysis
- Biocompatibility successfully tested with regard to biological reactivity in vitro (cytotoxicity) and in vivo in accordance with USP <87> and USP <88> Cl. VI (121 °C)
- Operation at low temperatures
  - Short response time
  - Consistently high accuracy
- Sterilizable and autoclavable
- Longer calibration intervals than with glass electrodes
  - Shorter hysteresis in event of temperature change
  - Smaller measuring error following exposure to high temperatures
  - Virtually no acid and alkaline errors
- Integrated temperature sensor for effective temperature compensation
- Improved alkaline stability
- Ideally suited for CIP processes when combined with an automatic retractable assembly

Advantages offered by Memosens technology

- Maximum process safety thanks to non-contact, inductive signal transmission
- Data security thanks to digital data transmission
- Very easy to use as sensor data saved in the sensor
- Predictive maintenance possible as sensor load data are recorded in the sensor
- Heartbeat

Endress+Hauser
People for Process Automation

Function and system design

Measuring principle

Ion-**selective**, or more generally, ion-**sensitive** field effect transistors (ISFET) were developed in the 1970s as an alternative to glass electrodes for pH measurement.

General principles

Ion-selective field effect transistors are based on an MOS [1] transistor arrangement → 1, 2. Unlike the MOS, however, the ISFET sensor does not have a metal gate (item 1) as the control electrode. Instead, in the ISFET sensor → 2, 2 the medium (item 3) is in direct contact with the gate insulator layer (item 2). Two highly p-conducting regions are diffused into the n-conducting substrate material (item 5) of the semi-conductor (Si). They act as the charge-supplying electrode ("Source", S) and the charge-accepting electrode ("Drain", D). The metal gate electrode (in the case of the MOSFET) and the medium (in the case of the ISFET) forms a capacitor with the underlying substrate. A difference in potential (voltage) between the gate and substrate (U_{GS}) increases the electron density in the area between the "Source" and "Drain". A conductive channel forms → 2, 2(item 4), such that a current I_D flows when a voltage U_D is applied.

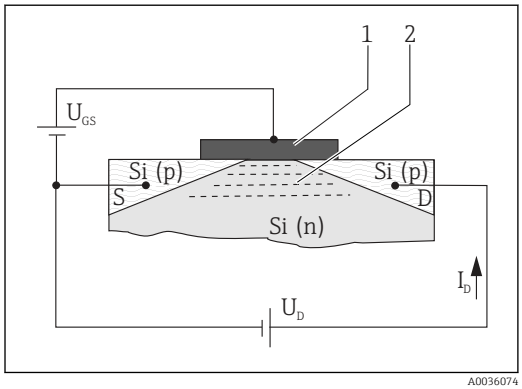

1 *MOSFET principle*

1 *Metal gate*
2 *Conductive channel (N-conducting)*

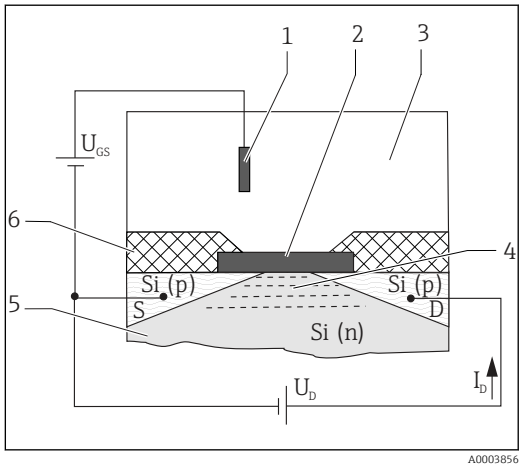

2 *ISFET principle*

1 *Reference electrode*
2 *Gate insulator layer*
3 *Medium*
4 *Conductive channel (N-conducting)*
5 *N-doped silicon substrate*
6 *Sensor shaft*

With the ISFET, ions that are in the medium and located in the boundary layer between the medium/gate insulator generate the electric field (gate potential). The effect described above causes a conductive channel to form in the silicon semi-conductor substrate between the "Source" and "Drain", and causes current to flow between the "Source" and "Drain".

Suitable sensor circuits use the dependence of the ion-selective gate potential to generate an output signal that is proportional to the concentration of the ion type.

pH-selective ISFET

The gate insulator acts as an ion-selective layer for H^+ ions. While the gate insulator is also impermeable to these ions (insulator effect), it allows reversible surface reactions with H^+ ions. Depending on the acidic or alkaline character of the medium, functional groups in the insulator surface either accept or donate H^+ ions (amphoteric character of the functional groups). This results in positive charging at the insulator surface (H^+ ions accepted in the acidic medium) or negative charging at the insulator surface (H^+ ions donated in the alkaline medium). Depending on the pH value, a defined surface charge can be used to control the field effect in the channel between the

1) Metal Oxide Semiconductor

"Source" and "Drain". The processes which lead to the creation of a charge potential and therefore to a control voltage U_{GS} between the "Gate" and "Source" are described by the Nernst equation:

$$U_{GS} = U_0 + \frac{2.3 \cdot RT}{nF} \cdot \lg a_{ion}$$

U_{GS}	Potential between gate and source	F	Faraday constant (26.803 Ah)
U_0	Offset voltage	a_{ion}	Activity of ion type (H^+)
R	Gas constant (8.3143 J/molK)	$\frac{2.3 \cdot RT}{nF}$	Nernst factor
T	Temperature [K]		
n	Valency (1/mol)		

At 25 °C (77 °F) the Nerst factor of the pH measurement has the value -59.16 mV/pH.

Measuring system

The complete measuring system comprises at least:
- ISFET sensor
- Memosens data cable: CYK10 (Memosens, digital sensor)
- Transmitter, e.g. Liquiline CM44, Liquiline CM42
- Assembly
  - Immersion assembly, e.g. Dipfit CPA111
  - Flow assembly, e.g. Flowfit CPA250
  - Retractable assembly, e.g. Cleanfit CPA875
  - Permanent installation assembly, e.g. Unifit CPA842

Additional options are available depending on the application:
Automatic cleaning and calibration system, e.g. Liquiline Control CDC90

Food industry

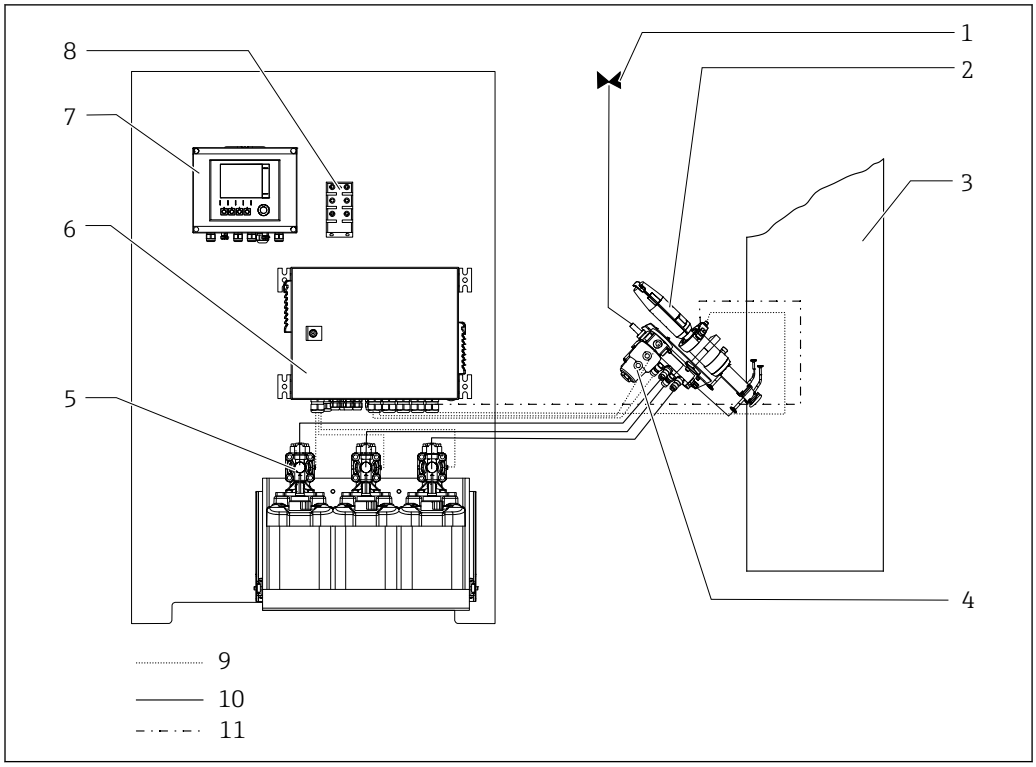

3 Complete measuring system

1 Water connection, at installation location
2 Assembly
3 Process/medium
4 Rinsing block
5 Pump canister unit
6 Pneumatic control unit
7 CDC90 control unit
8 Ethernet switch
9 Media (cleaners, buffers)
10 Compressed air line
11 Electric cable, signal cable

For detailed information on Liquiline Control CDC90, see the Operating Instructions BA01707C

As the ISFET sensor can be used in a broad range of applications - both with regard to temperature and the pH value - sterilization in place (SIP) is not a problem. There is only a small range involving high pH values in combination with high temperatures where the sensor's long-term stability is somewhat compromised. Media with such properties reduce the insulator oxide of the ISFET chip. As this is the pH and temperature range of CIP cleaning media, the ISFET sensor is only used here in combination with an automatic retractable assembly.

Advantages of the CDC90 fully automated cleaning and calibration system:
- Cleaning in place (CIP):
  The sensor in the retractable assembly is automatically retracted from the medium for the duration of the alkaline phase or for the entire CIP process. The sensor is then rinsed with a suitable cleaning agent in the rinse chamber.
- Calibration cycles can be set individually
- Reduced maintenance thanks to fully automated cleaning and calibration
- Optimum reproducibility of the measurement results
- Very low individual value tolerances thanks to automatic calibration

Pharmaceutical industry and biotechnology

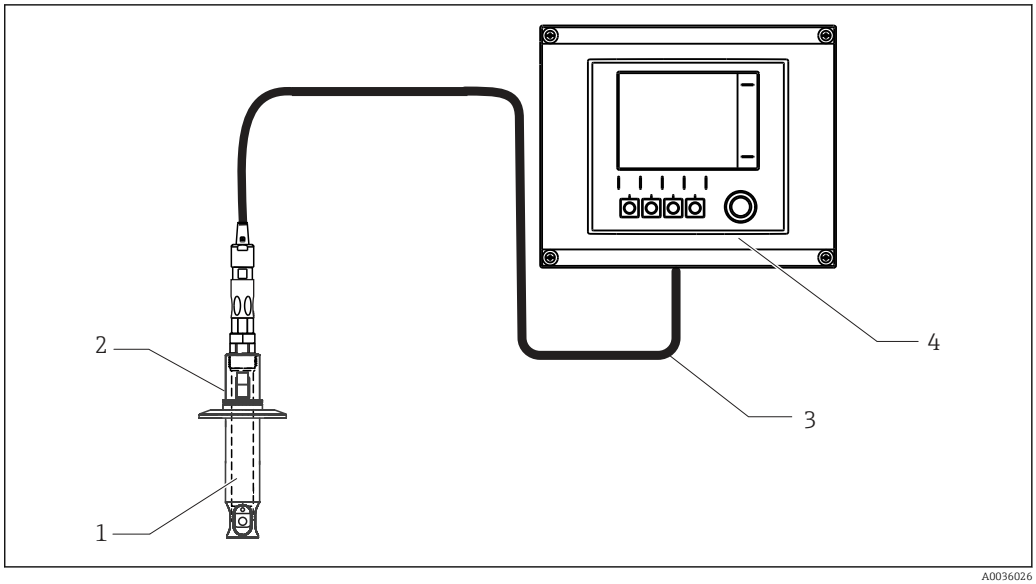

4 *Measuring system for pharmaceutics and biotechnology*

1 ISFET sensor
2 Installation assembly Unifit CPA842
3 Memosens data cable CYK10
4 Liquiline CM42 transmitter

Properties

Acid or alkaline errors
Another important advantage over glass sensors is the lower acid or alkaline errors in extreme pH ranges. In contrast to the glass sensor, almost no foreign ions can build up at the ISFET gate. Between pH 1 and pH 13, the measured error averages Δ pH 0.02 (at 25 °C (77 °F)) and is therefore at the detection limit. The following graphic shows the average measured error of the ISFET sensor in the pH 1 to 13 range compared with two glass sensors (2 different pH glasses) at the extreme values of pH 0.09 (1 M HCl) and 13.86 (1 M NaOH).

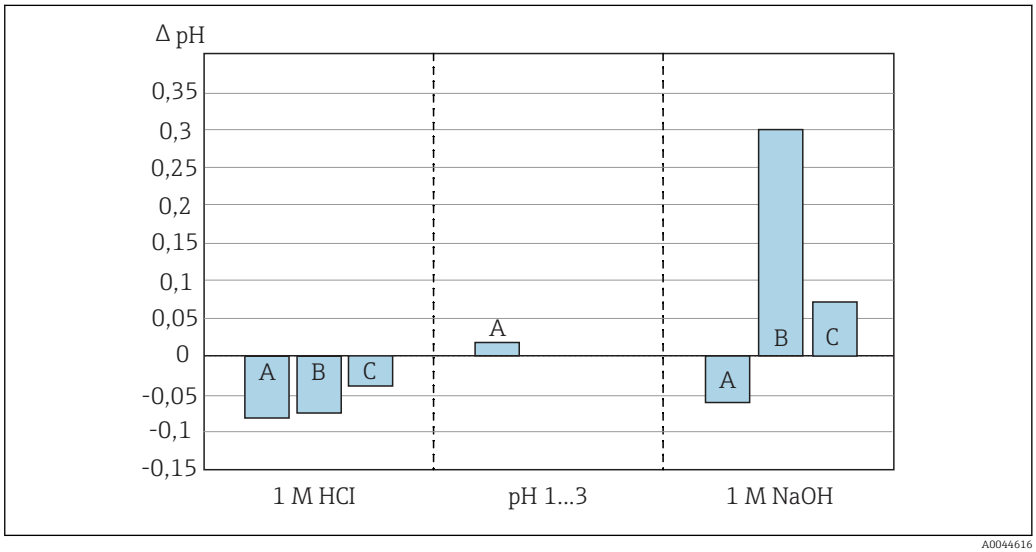

5 *Measured errors of the ISFET sensor compared to different pH sensors*

A ISFET CPSx7D
B Glass 1
C Glass 2

- Resistance to breaking
  The sensor's resistance to breaking is its most distinctive external feature. The entire sensor technology is embedded in a PEEK shaft. Only the highly durable ISFET chip and the reference are in direct contact with the medium.
- Measurement stability and sensor response time
  The ISFET response times are extremely short over the entire temperature range. With the ISFET sensor, there is no (temperature-dependent) equilibrium setting as in the gel layer of the pH glass in a glass sensor. This means it can also be used at low temperatures without a deceleration in the response time. The effect of large and fast temperature and pH value fluctuations on the measured error (hysteresis) is smaller than with a glass sensor, as the stress on the pH glass does not apply here.

Communication and data processing

Communication with the transmitter

Always connect digital sensors with Memosens technology to a transmitter with Memosens technology.

Data transmission to a transmitter for analog sensors is not possible.

Digital sensors can store measuring system data in the sensor. These include the following:
- Manufacturer data
  - Serial number
  - Order code
  - Date of manufacture
- Calibration data
  - Calibration date
  - Calibration values
  - Number of calibrations
  - Serial number of the transmitter used to perform the last calibration
- Operating data
  - Temperature application range
  - Date of initial commissioning
  - Hours of operation under extreme conditions
  - Number of sterilizations
  - Sensor monitoring data

Dependability

Maintainability

Easy handling

Sensors with Memosens technology have integrated electronics that store calibration data and other information (e.g. total hours of operation or operating hours under extreme measuring conditions). Once the sensor has been connected, the sensor data are transferred automatically to the transmitter and used to calculate the current measured value. As the calibration data are stored in the sensor, the sensor can be calibrated and adjusted independently of the measuring point. The result:
- Easy calibration in the measuring lab under optimum external conditions increases the quality of the calibration.
- Pre-calibrated sensors can be replaced quickly and easily, resulting in a dramatic increase in the availability of the measuring point.
- Thanks to the availability of the sensor data, maintenance intervals can be accurately defined and predictive maintenance is possible.
- The sensor history can be documented with external data carriers and evaluation programs.
- Thus, the current application of the sensors can be made to depend on their previous history.

Interference immunity

Data security thanks to digital data transmission

Memosens technology digitizes the measured values in the sensor and transmits the data to the transmitter via a non-contact connection that is free from potential interference. The result:
- Automatic error message if sensor fails or connection between sensor and transmitter is interrupted
- Immediate error detection increases measuring point availability

Safety

Maximum process safety
With inductive transmission of the measured value using a non-contact connection, Memosens guarantees maximum process safety and offers the following benefits:
- All problems caused by moisture are eliminated:
  - Plug-in connection free from corrosion
  - Measured values cannot be distorted by moisture
  - Can even be connected under water
- The transmitter is galvanically decoupled from the medium. Issues concerning "symmetrical high-impedance" or "asymmetry" or an impedance converter are a thing of the past.
- EMC safety is guaranteed by screening measures for the digital transmission of measured values.

Input

Measured variable

pH value

Temperature

Measuring range

0 to 14pH

–15 to 135 °C (5 to 275 °F)

Pay attention to the operating conditions in the process.

Power supply

Electrical connection

The sensor is connected to the transmitter via the Memosens data cable CYK10.

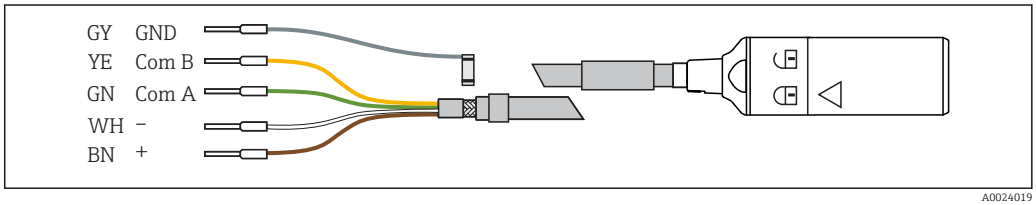

6 *Memosens data cable CYK10*

Performance characteristics

Reference operating conditions

Reference temperature:	25 °C (77 °F)
Reference pressure:	1013 hPa (15 psi)

Reference system

The integrated reference electrode is a double-chamber reference system with a bridging electrolyte. This has the advantage of an effective and stable contact between the junction and reference lead and an extremely long poison diffusion path. The bridging electrolyte is highly resistant to temperature and pressure changes.

Ag/AgCl reference lead (bridging electrolyte) with Advanced Gel 3M KCl, non-cytotoxic

Repeatability

± 0.01 pH

Response time

A closed-control loop is created each time the measuring system is switched on. The measured value adjusts to the real value during this time.

The settling time depends on the type and duration of the interruption:
- Voltage interruption, sensor remains in the medium: 3-5 minutes
- Interruption of the film of liquid between the ISFET and reference: 5-8 minutes
- Dry storage of the sensor for an extended period: up to 30 minutes

Response time t_{90}

t < 5 seconds, for a buffer change from pH 4 to pH 7 and under reference operating conditions

The response of the integrated temperature sensor can be slower in the event of extreme temperature changes. In this case, regulate the temperature of the sensor before a calibration or measurement.

Installation

Orientation

Note the direction of medium flow when installing the sensor.

- ▶ Position the ISFET chip so that it is at an angle of approx. 30 to 45 ° to the flow direction (item 2) → 8, 8.
  - ↳ Use the rotatable terminal head for this purpose.

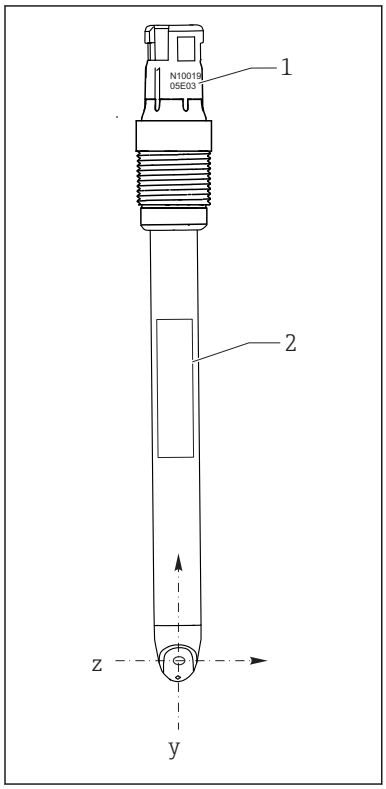

7 *Sensor orientation, front view*

1 Serial number
2 Nameplate

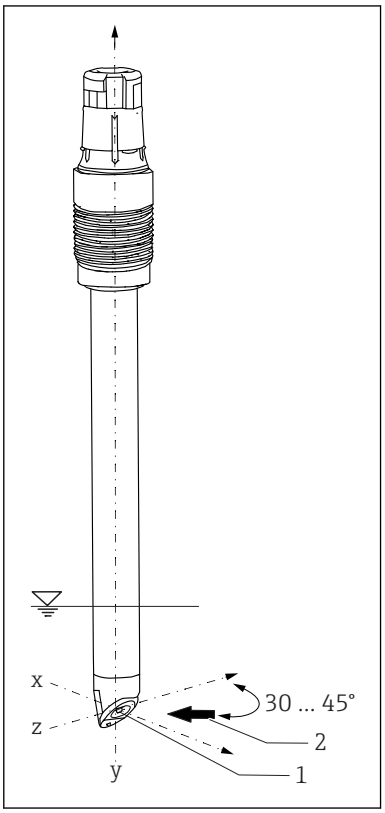

8 *Sensor orientation, 3D view*

1 ISFET chip
2 Direction of medium flow

When installing the sensor in an assembly, use the serial number engraved on the terminal head to ensure correct sensor orientation → 7, 8. The engraving is always on the same plane as the ISFET chip and the nameplate (z-y direction).

ISFET sensors are not designed for use in abrasive media. If these sensors are nevertheless used in such applications, avoid direct flow to the chip. This increases the sensor operating life and improves the sensor drift behavior. The disadvantage is that the pH value displayed is not stable.

Installation instructions

ISFET sensors can be installed in any position because there is no liquid inner lead. However, in the event of upside-down installation an air bubble [1] may form in the reference system and interrupt the electrical contact between the medium and the junction.

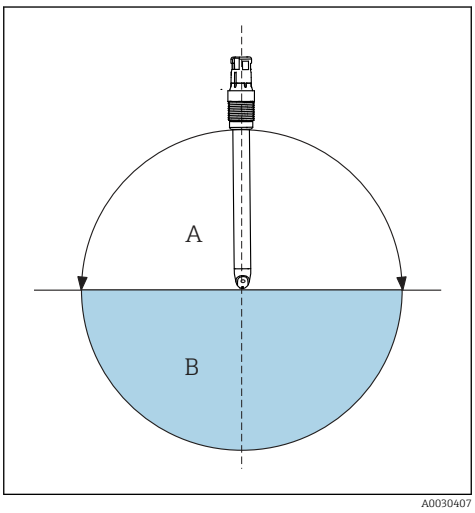

9 *Angle of installation*

A Recommended
B Permitted, please pay careful attention to basic conditions!

The installed sensor should remain in dry conditions for a maximum of 6 hours (also applies to upside-down installation).

1) The sensor is free of air bubbles when delivered from the factory. Air bubbles occur, however, when working with negative pressure, e.g. when emptying a tank.

- Before screwing in the sensor, make sure the assembly thread, the O-rings and the sealing surface are clean and undamaged and that the thread runs smoothly.
- Pay attention to the installation instructions provided in the Operating Instructions of the assembly used.

▶ Screw in the sensor and tighten by hand with a torque of 3 Nm (2.21 lbf ft) (specifications only apply if installing in Endress+Hauser assemblies).

For detailed information on removing the moistening cap, see BA01916C

Hygienic requirements

For 3-A or EHEDG-compliant and easy-clean installation, please observe the following:
- Use a certified process assembly
- Use a process assembly with a protective guard around the sensor
- The installation must be self-draining
- Dead areas should be avoided

It is recommended to change the sensor after 20 CIP cycles.

Environment

Ambient temperature range

NOTICE

Risk of damage from frost!

▶ Do not use the sensor at temperatures below −15 °C (5 °F) .

Storage temperature

0 to 50 °C (32 to 122 °F)

Degree of protection

Memosens
IP 68 (10 m (33 ft) water column, 25 °C (77 °F), 45 days, up to 135 °C (275 °F)) autoclavable

Electromagnetic compatibility (EMC)

Interference emission and interference immunity as per
- EN 61326-1:2013
- EN 61326-2-3:2013
- NAMUR NE21: 2012

Sensitivity to light

Like all semiconductor components, the ISFET chip is sensitive to light. The measured value may fluctuate. For this reason, avoid direct sunlight during calibration and operation. Normal ambient light does not have any significant effect on the measurement.

Process

Process temperature range

t_a

−15 to 70 °C (5 to 158 °F)

t_p

−15 to 135 °C (5 to 275 °F)

Medium temperature depending on the pH value

At high temperatures, alkalis can irreversibly damage the gate insulator oxide over the longer term. The sensor can only be used in the marked range (→ 10, 10) to the detriment of the sensor operating life. If permanently exposed to 1 molar NaOH at temperatures over 65 °C (149 °F), the sensor operating life is reduced to such an extent that permanent operation in this range is not recommended.

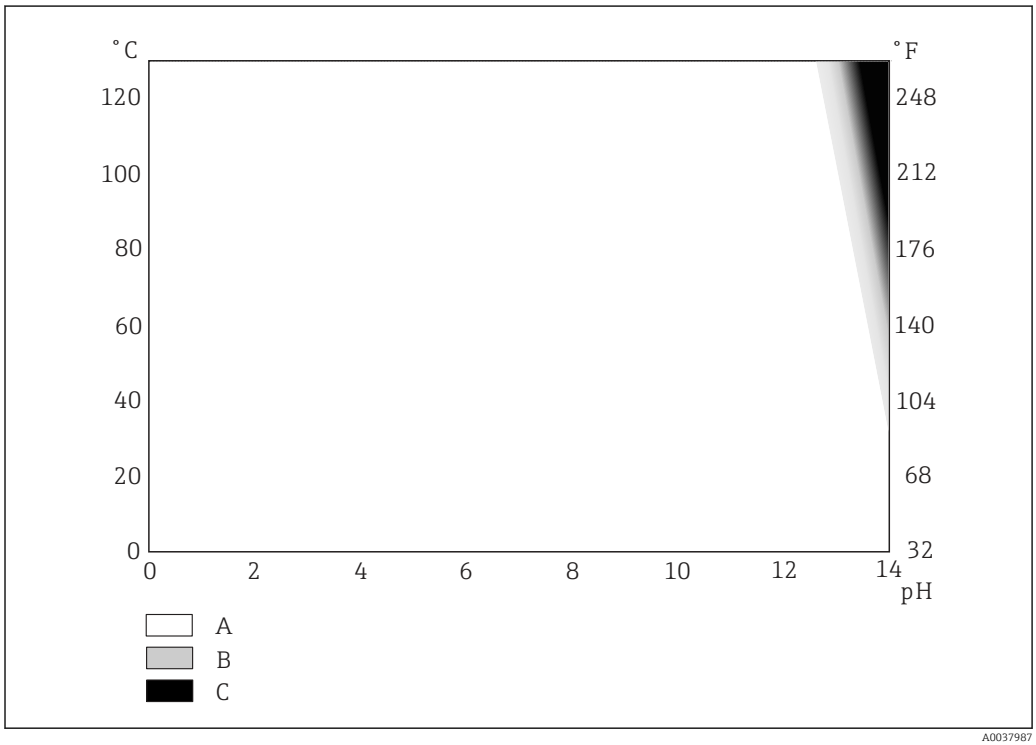

10 *Area of application depending on the temperature and pH value*

A Can be used without any problems
B Limited operating life
C Use not recommended

Operation at low temperatures

Sensor range of application according to the order code. Ordering information → 13

Process pressure range

Max. 11 bar (abs.)/100 °C (160 psi (abs.)/212 °F)

0.8 bar (12 psi)(abs.) is possible as minimum.

Conductivity

Minimum conductivity [2]: 50 µS/cm

Pressure/temperature ratings

Maximum 11 bar (absolute)/100 °C (160 psi (absolute)/212 °F)

Sterilizable: 4 bar (absolute)/135 °C (58 psi (absolute)/275 °F), 1 h

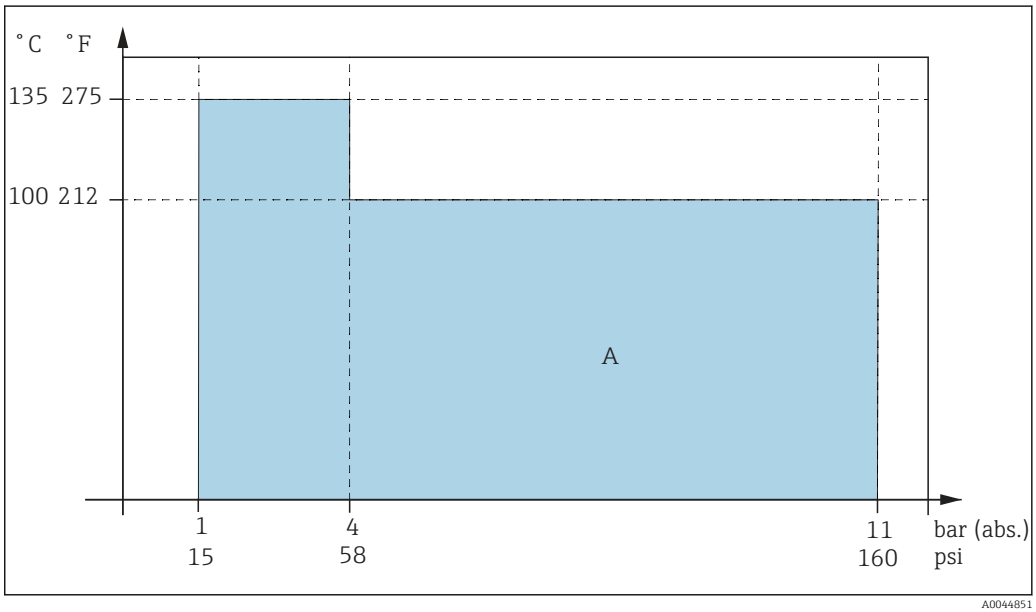

11 Pressure/temperature rating

A ISFET range of application

NOTICE

Risk of damage to the sensor!

- Never use the sensor outside of the listed specifications.

2) Reference conditions: Demineralized water as the measuring medium whose conductivity has been adjusted with NaOH, KCI or HCI; room temperature; unpressurized sensor operation; change between stationary medium and flow to the sensor with 2 m/s (6.6 ft/s) fluid velocity with lateral medium flow in the direction of the ISFET chip; the conductivity value indicated is the value determined when the measured value changes by less than 0.2 pH in all media between stationary media and flowing media.

Mechanical construction

Design, dimensions

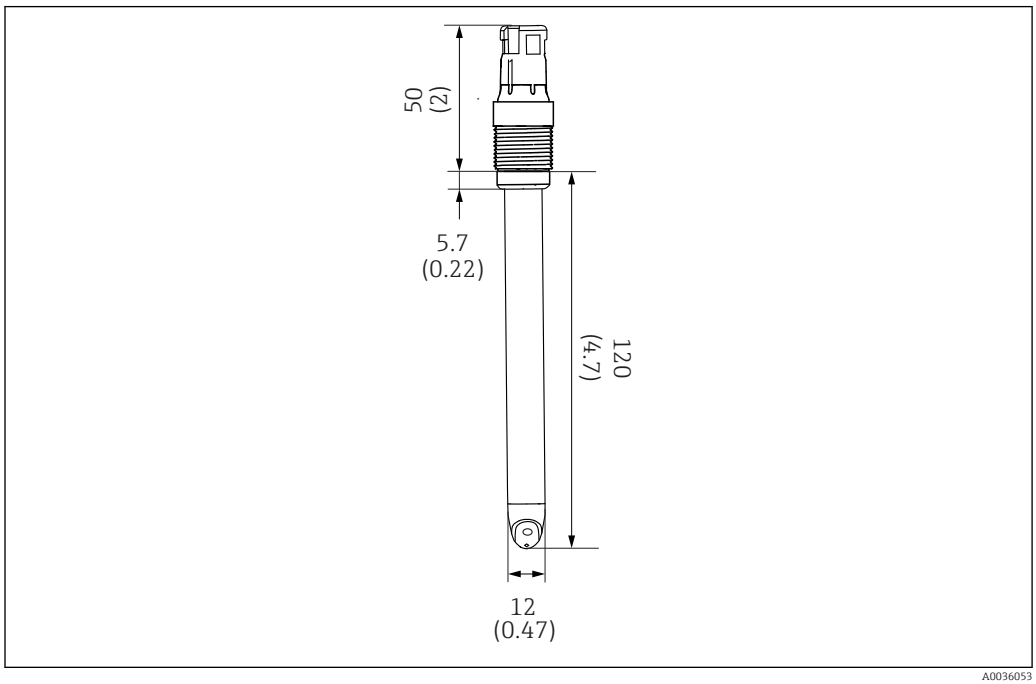

12 Dimensions of CPS77D. Engineering unit: mm (in)

Weight

CPS77D, length 120 mm (4.7 in):	35.4 g (1.25 oz)
CPS77D, length 225 mm (8.7 in):	50.3 g (1.77 oz)
CPS77D , length 360 mm (14.2 in):	66 g (2.3 oz)

Materials

Materials in contact with the medium

Sensor shaft	PEEK (FDA, 3-A)
Seals	Perfluoroelastomer (FDA, 3-A)
Junction	Ceramic, sterilizable

Materials not in contact with the medium

Temperature sensor

Pt1000 (Class A according to DIN IEC 60751)

Plug-in head

CPS77D:
Memosens, rotatable

Process connections

Pg 13.5

Surface roughness

R_a < 0.76 µm (30 µin)

Certificates and approvals

CE mark

The product meets the requirements of the harmonized European standards. As such, it complies with the legal specifications of the EU directives. The manufacturer confirms successful testing of the product by affixing to it the CE mark.

Ex approval

ATEX
II 1G Ex ia IIC T4/T6 Ga

IECEx
Ex ia IIC T4/T6 Ga

Ex versions of digital sensors with Memosens technology are identified by an orange-red ring on the plug-in head.

Hygienic compatibility

3-A

Certified according to 3-A Standard 74-06 ("3-A Sanitary Standard for Sensors and Sensor Fittings and Connections, Number 74-06"). Only certified if mounted in the process with a protective guard as per 74-06.

FDA compatibility

The manufacturer declares the use of FDA-listed materials.

EHEDG

Compliance with EHEDG's criteria for hygienic design
- Technical University of Munich, Research Center for Brewing and Food Quality, Freising-Weihenstephan
- Certificate type: Type EL Class I aseptic

ASME BPE-2018

Designed in accordance with the criteria of ASME (American Society of Mechanical Engineers) BPE (Bioprocessing Equipment)

Regulation (EC) No. 1935/2004

Meets the requirements of Regulation (EC) No. 1935/2004
The product therefore meets the requirements for materials that come into contact with food.

Biocompatibility

Biocompatibility successfully tested with regard to
- Biological reactivity, in vitro (cytotoxicity) according to USP <87>
- Biological reactivity, in vivo according to USP <88> Class VI, 121 °C (250 °F)

Additional certification

TÜV certificate for Memosens plug-in head

Pressure resistance 16 bar (232 psi) relative, minimum three times the safety pressure

EAC

The product has been certified according to guidelines TP TC 004/2011 and TP TC 020/2011 which apply in the European Economic Area (EEA). The EAC conformity mark is affixed to the product.

Ordering information

Product page

www.endress.com/CPS77D

Product Configurator

On the product page there is a **Configure** button to the right of the product image.

1. Click this button.
   ↳ The Configurator opens in a separate window.
2. Select all the options to configure the device in line with your requirements.
   ↳ In this way, you receive a valid and complete order code for the device.

3. Export the order code as a PDF or Excel file. To do so, click the appropriate button on the right above the selection window.

For many products you also have the option of downloading CAD or 2D drawings of the selected product version. Click the **CAD** tab for this and select the desired file type using picklists.

Scope of delivery

The delivery comprises:
- Sensor in the version ordered
- Operating Instructions
- Safety instructions for the hazardous area (for sensors with Ex approval)

Accessories

The following are the most important accessories available at the time this documentation was issued.

► For accessories not listed here, please contact your Service or Sales Center.

Device-specific accessories

Assemblies (selection)

Dipfit CPA111
- Immersion and installation assembly made of plastic for open and closed vessels
- Product Configurator on the product page: www.endress.com/cpa111

Technical Information TI00112C

Cleanfit CPA871
- Flexible process retractable assembly for water, wastewater and the chemical industry
- For applications with standard sensors with 12 mm diameter
- Product Configurator on the product page: www.endress.com/cpa871

Technical Information TI01191C

Cleanfit CPA875
- Retractable process assembly for sterile and hygienic applications
- For in-line measurement with standard sensors with 12 mm diameter, e.g. for pH, ORP, oxygen
- Product Configurator on the product page: www.endress.com/cpa875

Technical Information TI01168C

Cleanfit CPA450
- Manual retractable assembly for installing sensors with a diameter of 12 mm and a length of 120 mm in tanks and pipes
- Product Configurator on the product page: www.endress.com/cpa450

Technical Information TI00183C

Flowfit CPA250
- Flow assembly for pH/ORP measurement
- Product Configurator on the product page: www.endress.com/cpa250

Technical Information TI00041C

Unifit CPA842
- Installation assembly for food, biotechnology and pharmaceutics
- With EHEDG and 3A certificate
- Product Configurator on the product page: www.endress.com/cpa842

Technical Information TI00306C

Cleaning and calibration system

Liquiline Control CDC90
- Fully automatic cleaning and calibration system for pH and ORP measuring points in all industries
- Cleaned, validated, calibrated and adjusted
- Product Configurator on the product page: www.endress.com/cdc90

Technical Information TI01340C

Buffer solutions

High-quality buffer solutions from Endress+Hauser - CPY20
The secondary buffer solutions have been referenced to primary reference material of the PTB (German Federal Physico-technical Institute) or to standard reference material of NIST (National Institute of Standards and Technology) according to DIN 19266 by a laboratory accredited by the DAkkS (German accreditation body) according to DIN 17025.
Product Configurator on the product page: www.endress.com/cpy20

Measuring cable

Memosens data cable CYK10
- For digital sensors with Memosens technology
- Product Configurator on the product page: www.endress.com/cyk10

Technical Information TI00118C

Memosens laboratory cable CYK20
- For digital sensors with Memosens technology
- Product Configurator on the product page: www.endress.com/cyk20

Handheld device

Liquiline To Go CYM290, CYM291
- Portable multiparameter device for Memosens pH, conductivity and oxygen sensors
- Product Configurator on the product page: www.endress.com/cym290, www.endress.com/cym291

Technical Information TI01198C

Refer to the Operating Instructions for CYM290 or CYM291 for information on the sensors that can be connected.



www.addresses.endress.com

Endress+Hauser

People for Process Automation