MOUNTING AND
OPERATING INSTRUCTIONS

EB 8355-2 EN

Translation of original instructions



Type 3767 Electropneumatic Positioner

Edition January 2025

CE Ex certified

Note on these mounting and operating instructions

These mounting and operating instructions assist you in mounting and operating the device safely. The instructions are binding for handling SAMSON devices. The images shown in these instructions are for illustration purposes only. The actual product may vary.

➔ For the safe and proper use of these instructions, read them carefully and keep them for later reference.

➔ If you have any questions about these instructions, contact SAMSON's After-sales Service (aftersalesservice@samsongroup.com).

Documents relating to the device, such as the mounting and operating instructions, are available on our website at ***www.samsongroup.com > Downloads > Documentation***.

Definition of signal words

⚠ DANGER
Hazardous situations which, if not avoided, will result in death or serious injury

⚠ WARNING
Hazardous situations which, if not avoided, could result in death or serious injury

NOTICE
Property damage message or malfunction

Note
Additional information

Tip
Recommended action

1	**Safety instructions and measures**	**1-1**
1.1	Notes on possible severe personal injury	1-3
1.2	Notes on possible personal injury	1-4
1.3	Notes on possible property damage	1-5
1.4	Special instructions concerning explosion protection	1-5
2	**Markings on the device**	**2-1**
2.1	Nameplate	2-1
2.2	Article code	2-2
3	**Design and principle of operation**	**3-1**
3.1	Technical data	3-4
3.2	Options	3-5
3.3	Summary of explosion protection approvals	3-6
4	**Shipment and on-site transport**	**4-1**
4.1	Accepting the delivered goods	4-1
4.2	Removing the packaging from the positioner	4-1
4.3	Transporting the positioner	4-1
4.4	Storing the positioner	4-1
5	**Installation**	**5-1**
5.1	Installation conditions	5-1
5.2	Preparation for installation	5-1
5.2.1	Determining the operating direction of the positioner control loop	5-2
5.3	Positioner attachment	5-2
5.3.1	Direct attachment to Type 3277 Actuator	5-2
5.3.2	Attachment according to IEC 60534-6	5-6
5.3.3	Attachment to rotary actuators	5-10
5.3.4	Reversing amplifier for double-acting actuators	5-16
5.4	Pneumatic connection	5-18
5.4.1	Pressure gauges	5-18
5.4.2	Supply pressure	5-18
5.5	Adjusting the positioner	5-19
5.5.1	Air output capacity and proportional band X_P	5-20
5.5.2	Zero and span	5-21
5.5.3	Adjusting the optional limit switches	5-23
5.6	Adjusting the optional position transmitter	5-25
5.7	Electrical connection	5-27
5.7.1	Switching amplifier	5-28
5.8	Mounting accessories	5-29

6 Start-up 6-1

7 Operation 7-1

8 Malfunction 9-1

8.1 Troubleshooting 9-1

8.2 Emergency action 9-1

9 Servicing 9-1

9.1 Changing the operating direction of the positioner control loop 9-2

9.2 Converting a positioner from electropneumatic to pneumatic 9-2

9.3 Installing the limit switches 9-3

9.4 Installing the solenoid valve 9-3

9.5 Removing the solenoid valve 9-4

9.6 Periodic inspection and testing of the positioner 9-4

10 Decommissioning 10-1

11 Removal 11-1

12 Repairs 12-1

12.1 Servicing explosion-protected devices 12-1

12.2 Returning devices to SAMSON 12-1

13 Disposal 13-1

14 Certificates 14-1

15 Appendix 15-1

15.1 Accessories 15-1

15.2 After-sales service 15-4

1 Safety instructions and measures

Intended use

The SAMSON Type 3767 Positioner is mounted on pneumatic control valves and used to assign the valve position to the control signal. The device is designed to operate under exactly defined conditions (e.g. operating pressure, temperature). Therefore, operators must ensure that the positioner is only used in applications where the operating conditions correspond to the technical data. In case operators intend to use the positioner in applications or conditions other than those specified, contact SAMSON.

SAMSON does not assume any liability for damage resulting from the failure to use the device for its intended purpose or for damage caused by external forces or any other external factors.

➔ Refer to the technical data and nameplate for limits and fields of application as well as possible uses.

Reasonably foreseeable misuse

The Type 3767 Positioner is not suitable for the following applications:

– Use outside the limits defined during sizing and by the technical data

Furthermore, the following activities do not comply with the intended use:

– Use of non-original spare parts
– Performing maintenance activities not described

Qualifications of operating personnel

The positioner must be mounted, started up and serviced by fully trained and qualified personnel only; the accepted industry codes and practices must be observed. According to these mounting and operating instructions, trained personnel refers to individuals who are able to judge the work they are assigned to and recognize possible hazards due to their specialized training, their knowledge and experience as well as their knowledge of the applicable standards.

Explosion-protected versions of this device must be operated only by personnel who has undergone special training or instructions or who is authorized to work on explosion-protected devices in hazardous areas.

Personal protective equipment

No personal protective equipment is required for the direct handling of the positioner. Work on the control valve may be necessary when mounting or removing the device.

➔ Observe the requirements for personal protective equipment specified in the valve documentation.

➔ Check with the plant operator for details on further protective equipment.

Revisions and other modifications

Revisions, conversions or other modifications of the product are not authorized by SAMSON. They are performed at the user's own risk and may lead to safety hazards, for example. Furthermore, the product may no longer meet the requirements for its intended use.

Warning against residual hazards

The positioner has direct influence on the control valve. To avoid personal injury or property damage, plant operators and operating personnel must prevent hazards that could be caused in the control valve by the process medium, the operating pressure, the signal pressure or by moving parts by taking appropriate precautions. Plant operators and operating personnel must observe all hazard statements, warnings and caution notes in these mounting and operating instructions, especially for installation, start-up and service work.

If inadmissible motions or forces are produced in the pneumatic actuator as a result of the supply pressure, it must be restricted using a suitable supply pressure reducing station.

Responsibilities of the operator

Operators are responsible for proper use and compliance with the safety regulations. Operators are obliged to provide these mounting and operating instructions to the operating personnel and to instruct them in proper operation. Furthermore, operators must ensure that operating personnel or third parties are not exposed to any danger.

Responsibilities of operating personnel

Operating personnel must read and understand these mounting and operating instructions as well as the specified hazard statements, warnings and caution notes. Furthermore, the operating personnel must be familiar with the applicable health, safety and accident prevention regulations and comply with them.

Referenced standards, directives and regulations

Devices with a CE marking fulfill the following requirements of the Directives:

– Type 3767-0: 2014/30/EU, 2011/65/EU
– Type 3767-1/-8: 2014/30/EU, 2014/34/EU, 2011/65/EU

See the 'Certificates' chapter for the declarations of conformity.

Referenced documents

The following documents apply in addition to these mounting and operating instructions:

– The mounting and operating instructions of the components on which the positioner is mounted (valve, actuator, valve accessories etc.).

1.1 Notes on possible severe personal injury

⚠ DANGER

Risk of fatal injury due to the ignition of an explosive atmosphere.

Incorrect installation, operation or maintenance of the positioner in potentially explosive atmospheres may lead to ignition of the atmosphere and ultimately to death.

➔ Observe EN 60079-14 (VDE 0165, Part 1) for work on the positioner in hazardous areas.

➔ Work in hazardous areas is to be performed only by personnel who has undergone special training or instructions or who is authorized to work on explosion-protected devices in hazardous areas.

➔ Read the special instructions concerning explosion protection (see Chapter 1.4).

1.2 Notes on possible personal injury

⚠ WARNING

Risk of injury by possible movement of the actuator stem after connecting the signal pressure.

➔ Do not touch or block the actuator stem.

Incorrect electrical connection will render the explosion protection unsafe.

➔ Adhere to the terminal assignment.

➔ Do not undo the enameled screws in or on the housing.

Intrinsic safety rendered ineffective in intrinsically safe devices.

Every time the positioner is operated, even when it is not installed in the plant (e.g. during maintenance, calibration and work on the device), it must be ensured that the conditions for intrinsically safe circuits are observed.

➔ Only connect intrinsically safe devices intended for use in intrinsically safe circuits to certified intrinsically safe input-connected units.

➔ Do not place intrinsically safe devices back into operation that were connected to intrinsically safe input-connected units without certification.

➔ Do not exceed the maximum permissible electric values specified in the EC type examination certificates when interconnecting intrinsically safe electrical equipment (U_i or U_0, I_i or I_0, P_i or P_0, C_i or C_0 and L_i or L_0).

1.3 Notes on possible property damage

NOTICE

An incorrect electric signal will damage the positioner.

A current source must be used to power the positioner.

➔ Only use a current source and never a voltage source.

Incorrect assignment of the terminals will damage the positioner and will lead to malfunction.

For the positioner to function properly, the prescribed terminal assignment must be observed.

➔ Connect the electrical wiring to the positioner according to the prescribed terminal assignment.

Risk of malfunction due to failure to comply with air quality requirements.

➔ Only use supply air that is dry and free of oil and dust.

➔ Read the maintenance instructions for upstream pressure reducing stations.

➔ Blow through all air pipes and hoses thoroughly before connecting them.

1.4 Special instructions concerning explosion protection

Equipment for use in zone 2/zone 22

➔ In equipment operated according to type of protection Ex nA II (non-sparking equipment) according to EN 60079-15: 2003, circuits may be connected, interrupted or switched while energized only during installation, maintenance or repair.

➔ Equipment connected to energy-limited circuits with type of protection Ex nL according to EN 60079-15:2003 may be switched under normal operating conditions.

➔ The maximum permissible values specified in the statement of conformity or its addenda apply when interconnecting the equipment with energy-limited circuits in type of protection Ex nL IIC.

Servicing explosion-protected devices

➔ Observe the following for servicing equipment in a section relevant to explosion protection:

- The equipment must not be put back into operation until a qualified inspector has assessed the equipment according to explosion protection requirements, has issued an inspection certificate or given the device a mark of conformity. Inspection by a qualified inspector is not required if the manufacturer performed a routine test on the device before putting it back into operation. Document the passing of the routine test by attaching a mark of conformity to the device.
- Replace explosion-protected components only with original, routine-tested components by the manufacturer.
- Devices that have already been operated outside hazardous areas and are intended for future use inside hazardous areas must comply with the safety requirements placed on serviced devices. Before being operated inside hazardous areas, test the devices according to the specifications for servicing explosion-protected devices.

2 Markings on the device

2.1 Nameplate

Example for version without explosion protection

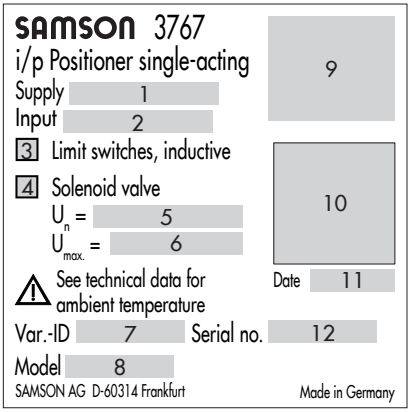

Example for version with explosion protection

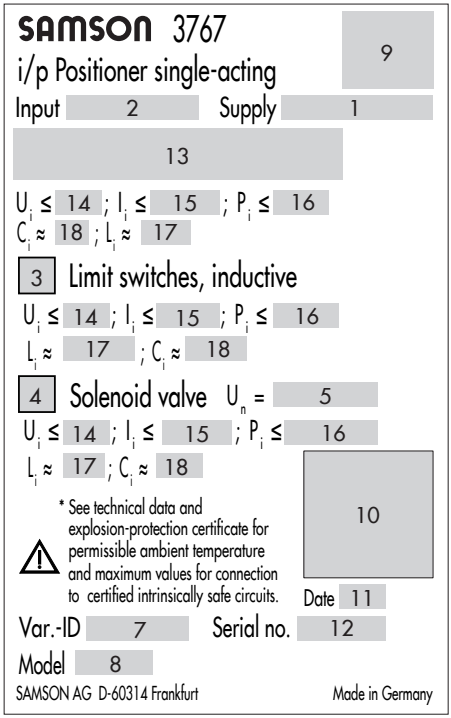

1 Supply pressure
2 Signal range
3 Optional inductive limit switch (yes/no)
4 Optional solenoid valve (yes/no)
5 Nominal signal (solenoid valve)
6 Maximum voltage (solenoid valve)
7 Configuration ID
8 Model number
9 Approvals (CE, EAC, UKCA etc.)
10 DataMatrix code (electronic nameplate)
11 Date of manufacture
12 Serial number

13 Explosion protection marking
14 Maximum input voltage
15 Maximum input current
16 Maximum power input
17 Maximum internal inductance
18 Maximum internal capacitance

2.2 Article code

Electropneumatic Positioner	Type 3767-	x	x	x	0	1	x	x	x	x	x	x	0	x	0
Explosion protection															
Without		0						2							
ATEX	II 2G Ex ia IIC T6	1												0	
EAC	1Ex ia IIC T6/T5/T4 Gb X; Ex tb IIIC T80 °C Db X	1												1	
CSA	Ex ia IIC T6: Class I, Zone 0; Class I, II, Div. 1, Groups A, B, C, D, E, F, D; Class I,II, Div. 2, Groups A;B,C,D,E,F,D	3													
FM	IS Class I,II,III, Div.1,GP A,B,C,D,E,F,G, T* Type 4X IS Class I, Zn 0, AEx ia IIC, T* NI Class I, Div.2,GP A,B,C,D,F,G T*	3													
IECEx	Ex ia I/IIC T6 IP 65, Ex nI/IIC T6 IP 65	6													
ATEX	II 3G Ex nA II T6	8													
Additional equipment															
Without			0												
Inductive limit contacts 2x SJ2-SN			2												
(Analog position transmitter 4 to 20 mA) [1]			6	0								0			
3/2-way solenoid valve															
Without				0											
6 V DC				2											
12 V DC				3											
24 V DC				4											
Type of mounting															
Standard range spring					0	1									
Pneumatic connections															
¼-18 NPT							1								
ISO 228/1-G ¼							2								
Electrical connections															
Plastic cable gland M20x1.5, blue								1	0						
Plastic cable gland M20x1.5, black								2	0						
M20x1.5 cable gland, nickel-plated brass								2	1						
Housing version															
Die-cast aluminum										1					
(CrNiMo steel) [2]										2					

Set point							
4 to 20 mA				1			
0 to 20 mA				2			
1 to 5 mA				3			
Temperature range							
Standard				0			
Low-temperature version							
$T_{min} \geq -50$ °C; optional limit contacts, solenoid valve	2	1		2			
Special versions							
Without					0	0	0

1) No longer available since March 2011
2) No longer available since April 2020

3 Design and principle of operation

➔ See Fig. 3-1

The positioner consists of an electropneumatic converter and a pneumatic unit equipped with a lever for travel pick-off, a measuring diaphragm and the pneumatic control system with nozzle, diaphragm lever (flapper plate) and booster.
The positioner is designed either for direct attachment to SAMSON Type 3277 Actuators or for attachment to actuators according to NAMUR (IEC 60534-6) using an adapter housing.

The positioner can be additionally equipped with either inductive limit contacts and/or a solenoid valve or position transmitter.
The control signal, e.g. 4 to 20 mA, issued by the controller is transmitted to the electropneumatic converter (13) where it is converted into a proportional pressure signal p_e.
The positioner operates according to the force-balance principle. The valve travel, i.e. the valve position, is transmitted to the pick-up lever (1) over the pin (1.1) and determines the force of the range spring (4). This force is compared to the positioning force generated by the pressure p_e at the measuring diaphragm (5).
If either the control signal or the valve position changes, the diaphragm lever (3) moves, altering the distance to the nozzle (2.1 or 2.2), depending on the adjusted operating direction of the positioner.

The supply air is supplied to the booster (10) and the pressure regulator (9).

The controlled supply air flows through the X_p restriction (8) and the nozzle (2.1, 2.2) and hits the diaphragm lever (flapper plate). Any change in the set point or the valve position causes the pressure to change upstream or downstream of the booster.

The air controlled by the booster (signal pressure p_{st}) flows through the volume restriction (11) to the pneumatic actuator, causing the plug stem to move to a position corresponding to the set point.

The adjustable X_p restriction (8) and volume restriction (11) are used to optimize the positioner control loop.

The pick-up lever (1) and the range spring (4) must be selected to match the rated valve travel and the nominal span of the set point.

Positioner with inductive limit contacts

In this version, the rotary shaft of the positioner carries two adjustable tags which actuate the built-in proximity switches.

Positioner with solenoid valve

When the positioner is equipped with a solenoid valve, the valve can be moved to the fail-safe position, regardless of the positioner's output signal. If a control signal corresponding to the binary signal '0' (OFF) is applied to the input, the signal pressure p_{st} is shut off and the actuator is vented. The actuator springs move the valve to its fail-safe position.

When a control signal corresponding to the binary signal '1' (ON) is applied to the in-

put, the signal pressure p_{st} is applied to the actuator, allowing the valve to move according to the input signal issued by the control equipment.

Positioner with position transmitter

A positioner containing a position transmitter cannot be equipped with integrated limit contacts or an integrated solenoid valve since the position transmitter requires most of the space inside.

The position transmitter is used to assign the valve position, i.e. the valve travel, to an output signal of 4 to 20 mA.

The tuning of the position transmitter ensures that both end positions "valve CLOSED" or "valve OPEN" as well as all intermediate positions can be signalized. Since the valve position is signalized independently of the input signal to the positioner, the position transmitter is a suitable option for checking the actual valve position.

Legend for Fig. 3-1

1 Lever
1.1 Pin
1.2 Clamp
2.1 Nozzle >>
2.2 Nozzle <>
3 Diaphragm lever
4 Range spring
5 Measuring diaphragm
6.1 Span adjuster
6.2 Zero adjuster
7 Turnboard
8 Xp restriction
9 Pressure regulator
10 Booster
11 Volume restriction
12 Solenoid valve (option)
13 i/p converter

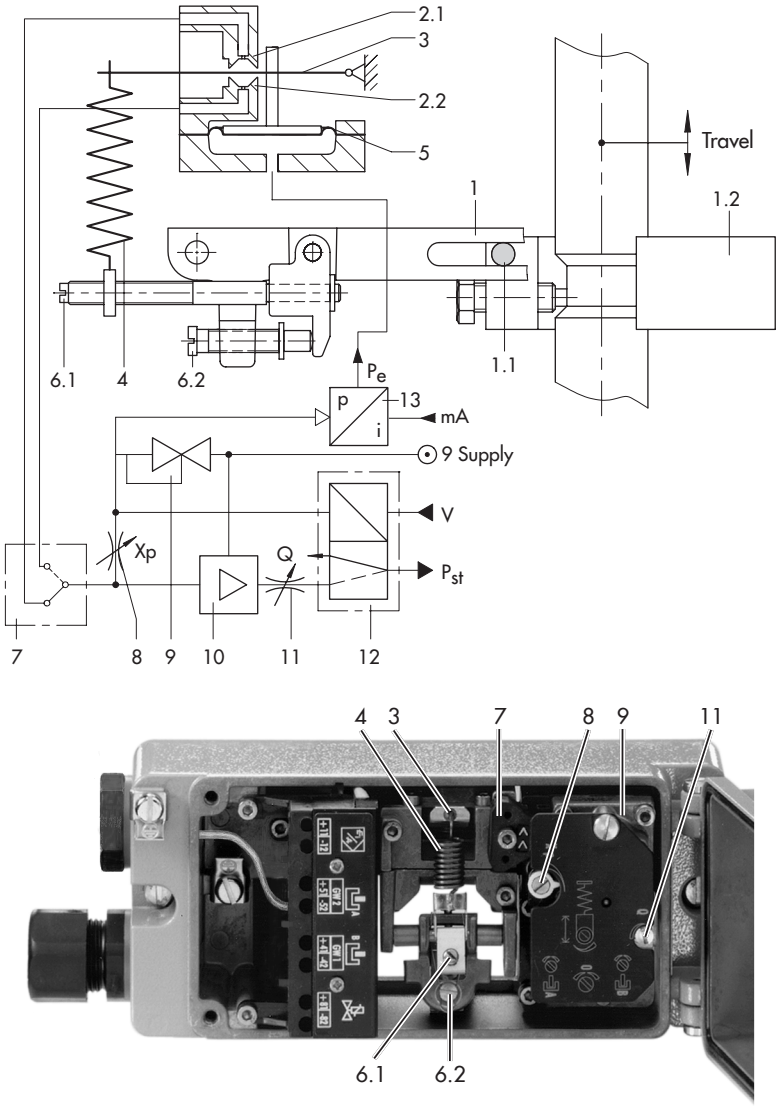

Fig. 3-1: *Functional diagram and inside view*

3.1 Technical data

Positioner			
Travel range, adjustable		Direct attachment: 7.5 to 30 mm Attachment according to IEC 60534-6: 7.5 to 120 mm or	
Opening angle		30° to 90° depending on the cam disk	
Set point			
Signal range		0/4 to 20 mA	1 to 5 mA
Span		8 to 20 mA	2 to 4 mA
Coil resistance R_i at 20 °C		200 Ω	880 Ω
Supply	Supply air	1.4 to 6 bar (20 to 90 psi)	
	Air quality acc. to ISO 8573-1	Max. particle size and density: Class 4 Oil content: Class 3 · Pressure dew point: Class 3 or at least 10 K below the lowest ambient temperature to be expected	
Signal pressure p_{st} (output)		Can be limited between approx. 2.5 to 6.0 bar (38 to 90 psi)	
Characteristic		Linear characteristic, deviation from terminal-based conformity ≤1 %	
Hysteresis		≤0.6 %	
Sensitivity		≤0.1 %	
Operating direction		Reversible	
Proportional band Xp		<1 to 2.5 % (proportional-action coefficient K_p: >100 to 40)	
Air consumption		At 1.4 bar supply pressure: ≤280 l_n/h	At 6 bar supply pressure: ≤280 l_n/h W. lowest setting of pressure regulator
Air output capacity	Actuator (supply)	3.0 $m_n^3/h \cdot K_{Vmax\ (20\ °C)} = 0.09$	8.5 $m_n^3/h \cdot K_{Vmax\ (20\ °C)} = 0.09$
	Actuator (exhaust)	4.5 $m_n^3/h \cdot K_{Vmax\ (20\ °C)} = 0.15$	14.0 $m_n^3/h \cdot K_{Vmax\ (20\ °C)} = 0.15$
Permissible ambient temperature		–20 to 80 °C with plastic cable gland –40 to 80 °C with metal cable gland (special version down to –45 °C) –20 to 70 °C with position transmitter See test certificates in the appendix for explosion-protected devices	
Influences		Temperature: ≤0.3 %/10 K Supply air: ≤1 % between 1.4 and 6 bar Vibration: None between 10 and 150 Hz and 4 g	
Explosion protection		See test certificate in the appendix for type of protection Ex ia IIC T6	
Degree of protection		IP54/IP65 and NEMA 4X possible by fitting a filter check valve (see table on accessories on page 5-30)	
Electromagnetic compatibility		Complying with EN 61000-6-2, EN 61000-6-3 and NAMUR Recommendation NE 21	
Conformity		CE	
Weight		Approx. 1 kg	

3.2 Options

Inductive limit switches					
Two proximity switches		SJ2-SN			
Control circuit		Values according to downstream transistor relay			
Hysteresis at rated travel		≤1 %			
Solenoid valve					
Input		Binary DC voltage signal			
Nominal signal		6 V DC	12 V DC	24 V DC	
Signal '0' (no response) DC signal at –25 °C		≤1.2 V	≤2.4 V	≤4.7 V	
Signal '1' (response) DC signal at 80 °C		≥5.4 V	≥9.6 V	≥18 V	
Maximum permissible signal		28 V	25 V	32 V	
Coil resistance R_i at 20 °C		2909 Ω	5832 Ω	11714 Ω	
Air consumption in steady state		In addition to that of the positioner: OFF ≤60 l_n/h · ON ≤10 l_n/h			
Closing time for	Type 3277 Actuator	120 cm²	240 cm²	350/355 cm²	700 cm²
Rated travel and signal pressure range (K_{VS} = 0.14)	0.2 to 1 bar	≤ 0.5 s	≤1 s	≤1.5 s	≤4 s
	0.4 to 2 bar		≤2 s	≤2.5 s	≤8 s
	0.6 to 3 bar		≤1 s	≤1.5 s	≤5 s
Position transmitter [1), 2)]		–		**Output circuit, intrinsically safe**	
Output signal		Two-wire connection 4 to 20 mA, reversible operating direction			
Supply		Minimum terminal voltage: 12 V DC max. 45 V DC		Only with intrinsically safe circuit	
Characteristic		Characteristic: Output linear to input, deviation from terminal-based linearity ≤1 %			
Hysteresis		≤0.6 %			
Response		≤0.1 %			
Influence of power supply		≤1 % when voltage changes occur within the specified limits			
High-frequency influence		≤0.1 %, f = 150 MHz, 1 W power output at a distance of 0.5 m			
Load influence		≤0.1 %			
Permissible ambient temperature		–20 to 70 °C		–20 to → *See test certificate*	
Ambient temperature influence		≤0.4 % on lower measuring range value, ≤0.2 % on measuring span			
Ripple of output signal		≤0.3 %			

1) Data based on standard spring (15 mm travel with Type 3277 Actuator) and gain of 100.
2) Available until March 2011

3.3 Summary of explosion protection approvals

Type	Certification			Type of protection
3767-1	**EAC**	Number	RU C-DE. HA65.B.00510/20	1Ex ia IIC T6/T5/T4 Gb X Ex tb IIIC T80 °C Db X
		Date	2020-03-18	
		Valid until	2025-03-18	
	KCS	On request		
	ATEX	Number	PTB 01 ATEX 2167	II 2G Ex ia IIC T6
		Date	2001-11-29	
3767-3	**CSA**	Number	1607848	Ex ia IIC T6: Class I, Zone 0; Class I, II, Div. 1, Groups A, B, C, D, E, F, D; Class I, II, Div. 2, Groups A, B, C, D, E, F, D;
		Date	2005-09-16	
	FM	Number	FM24US0232	IS Class I,II,III, Div.1,GP A,B,C,D,E,F,G, T* Type 4X IS Class I, Zn 0, AEx ia IIC, T* NI Class I, Div.2,GP A,B,C,D,F,G T* * See Addendum
		Date	2025-01-02	
3767-6	**IECEx**	Number	IECEx TSA 05.0004X	Ex ia I/IIC T6 IP 65, Ex nI/IIC T6 IP 65
		Date	2005-05-24	
3767-8	**ATEX**	Number	PTB 01 ATEX 2170 X	II 3G Ex nA II T6
		Date	2003-05-28	

Dimensional drawings

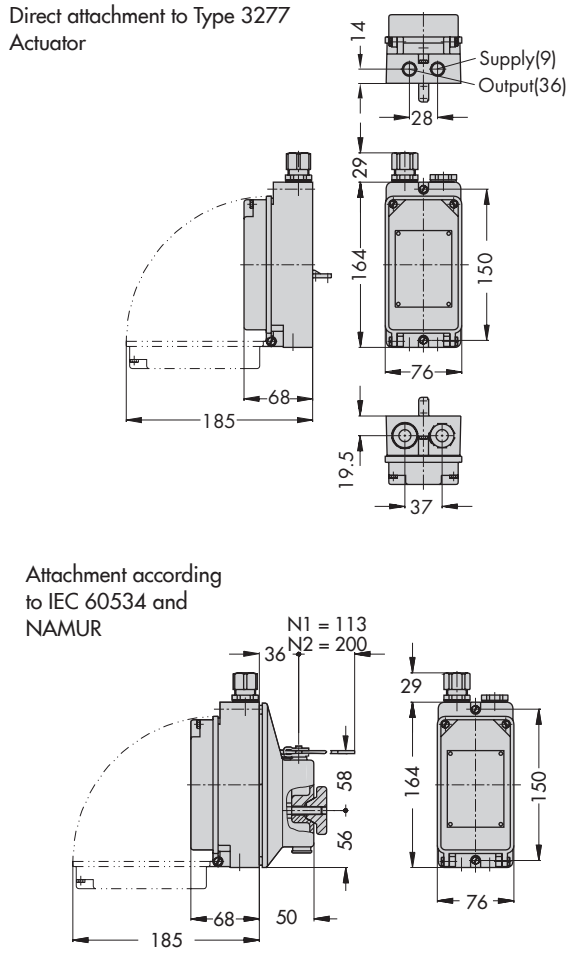

Fig. 3-2: *Dimensions of Type 3767 Positioner*

Dimensional drawings

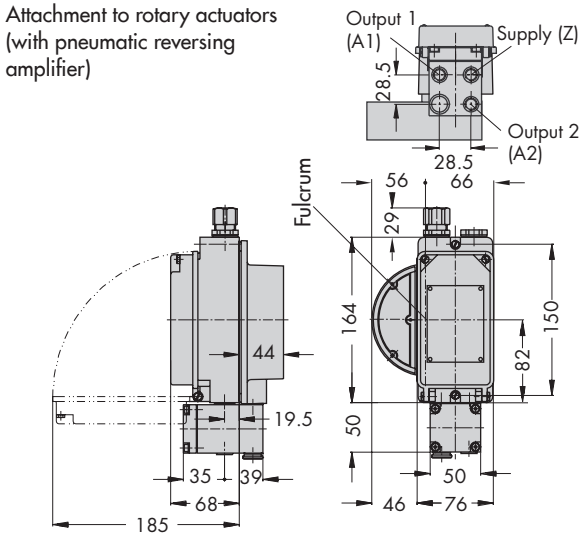

Fig. 3-3: *Dimensions of Type 3767 Positioner*

4 Shipment and on-site transport

The work described in this chapter is only to be performed by personnel appropriately qualified to carry out such tasks.

4.1 Accepting the delivered goods

After receiving the shipment, proceed as follows:

1. Check the scope of delivery. Check that the specifications on the nameplate of the positioner match the specifications in the delivery note. See the 'Markings on the device' chapter for nameplate details.
2. Check the shipment for transportation damage. Report any damage to SAMSON and the forwarding agent (refer to delivery note).

4.2 Removing the packaging from the positioner

Observe the following sequence:

➔ Do not remove the packaging and the protective caps on the pneumatic ports until immediately before installation.

➔ Dispose and recycle the packaging in accordance with the local regulations.

4.3 Transporting the positioner

➔ Pack the positioner properly to comply with terms of transportation.

Transport instructions

– Protect the positioner against external influences (e.g. impact).

– Protect the positioner against moisture and dirt.

– Observe transport temperature depending on the permissible ambient temperature (see the 'Design and principle of operation' chapter).

4.4 Storing the positioner

NOTICE

Risk of device damage due to improper storage.

➔ *Observe the storage instructions.*

➔ *Avoid long storage times.*

➔ *Contact SAMSON in case of different storage conditions.*

Note

We recommend regularly checking the positioner and the prevailing storage conditions during long storage periods.

Storage instructions

- Protect the positioner against external influences (e.g. impact, shocks, vibration).
- Do not damage the corrosion protection (coating).
- Protect the positioner against moisture and dirt. In damp spaces, prevent condensation. If necessary, use a drying agent or heating.
- Make sure that the ambient air is free of acids or other corrosive media.
- Observe storage temperature depending on the permissible ambient temperature (see the 'Design and principle of operation' chapter).
- Store the positioner with the cover closed.
- Seal the pneumatic and electrical connections.
- Do not place any objects on the positioner.

5 Installation

The work described in this chapter is only to be performed by personnel appropriately qualified to carry out such tasks.

⚠ DANGER

Risk of fatal injury due to the ignition of an explosive atmosphere.

➔ *Observe EN 60079-14 (VDE 0165, Part 1) for work on the positioner in hazardous areas.*

➔ *Work in hazardous areas must only be performed by personnel who has undergone special training or instructions or who is authorized to work on explosion-protected devices in hazardous areas.*

⚠ WARNING

Crush hazard arising from moving parts on the valve.

➔ *Do not touch any moving valve parts while the control valve is in operation.*

➔ *Before performing any mounting or installation work on the positioner, put the control valve out of operation by disconnecting and locking the supply air and control signal.*

➔ *Do not impede the movement of the actuator and plug stem by inserting objects into the yoke.*

! NOTICE

Risk of malfunction due to incorrect mounting parts/accessories.

➔ *Only use the mounting parts and accessories listed in these mounting and operating instructions to mount and install the positioner. Pay special attention to the type of attachment.*

5.1 Installation conditions

Work position

The work position for the positioner is the front view onto the operating controls on the positioner seen from the position of operating personnel.

Operators must ensure that, after installation of the positioner, the operating personnel can perform all necessary work safely and easily access the device from the work position.

Mounting orientation

The vent plugs on the housing cover must face downward when the valve is installed.

5.2 Preparation for installation

Before mounting, make sure the following conditions are met:

– The positioner is not damaged.

– The air supply is not yet connected to the positioner.

– The current is not yet connected to the positioner.

Proceed as follows:

➔ Lay out the necessary material and tools to have them ready during mounting.

➔ Determine the operating direction of the positioner control loop (see Chapter 5.2.1).

➔ Remove the protective cover on the back of the positioner.

➔ Remove the protective caps from the pneumatic connections.

5.2.1 Determining the operating direction of the positioner control loop

Operating direction increasing/increasing <<

– The signal pressure p_{st} rises as the input signal p_e (set point) rises

– The signal pressure p_{st} decreases as the input signal p_e (set point) decreases

Operating direction increasing/decreasing <>

– The signal pressure p_{st} decreases as the input signal p_e (set point) rises

– The signal pressure p_{st} rises as the input signal p_e (set point) decreases

On the turnboard (7), the operating direction is indicated by symbols (direct **<<**, reverse <>). Depending on the position of the turnboard, the adjusted operating direction and the associated symbol is visible. If the required operating direction does not correspond to the visible symbol or if the operating direction is to be changed, proceed as follows:

➔ Unscrew the fastening screw from the turnboard.

➔ Turn the turnboard by 180°. Make sure that the three rubber gaskets inserted in the housing remain in position.

➔ Fasten the turnboard.

5.3 Positioner attachment

5.3.1 Direct attachment to Type 3277 Actuator

➔ Required mounting parts and accessories: Chapter 5.8

➔ See Fig. 5-2

The positioner is mounted on the left or right side of the valve depending on the actuator's direction of action (fail-safe action) and the operating direction of the positioner control loop (see Fig. 5-1, top).

1. Fasten the clamp (1.2) to the actuator stem, making sure that the fastening screw rests in the groove of the actuator stem.
2. Fasten the associated pick-up lever D1 or D2 (with 355/700 cm² actuators) to the feedback lever of the positioner.
3. Secure the intermediate plate (15) with the gasket facing towards the actuator yoke.
4. Position the positioner such that the pick-up lever slides in line over the pin (1.1)

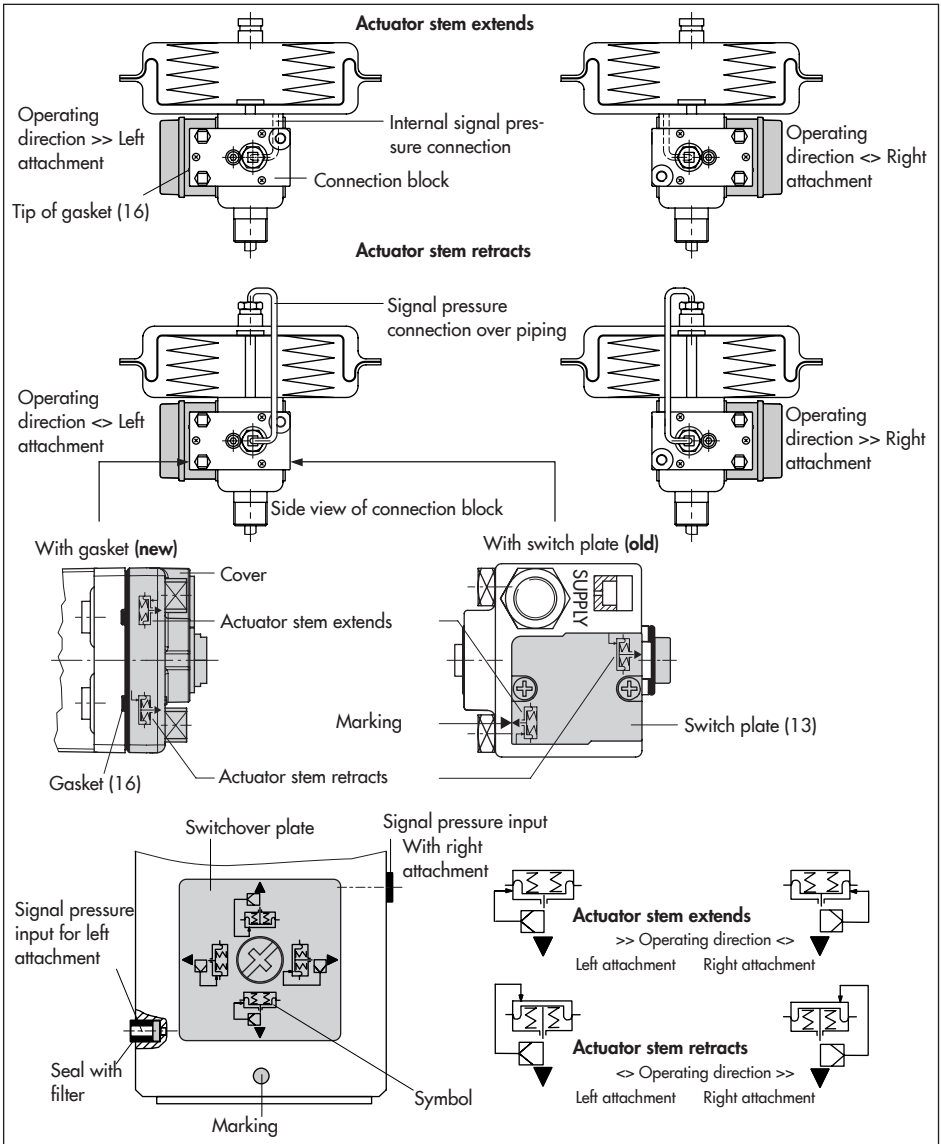

Fig. 5-1: *Mounting position and connection of signal pressure for Type 3277 Actuator (top) and Type 3277-5 Actuator (120 cm²) (bottom)*

of the clamp (1.2). Fasten the positioner to the intermediate plate (15).

5. Mount cover (16).
6. Check whether the correct range spring has been installed as listed in Chapter 5.8.
   Range spring 1 is installed as standard. If necessary, replace it with range spring 2 included in the accessories and fix it at the outer hook-in holes.

Actuators with 175 to 750 cm² effective areas

7. Make sure that the tip of the gasket (16) projecting from the side of the connection block (Fig. 5-1, middle) is positioned to match the actuator symbol for the actuator's fail-safe action "actuator stem extends" or "actuator stem retracts".
   If this is not the case, unscrew the three fastening screws and lift off the cover. Turn the gasket (16) by 180° and re-insert it.

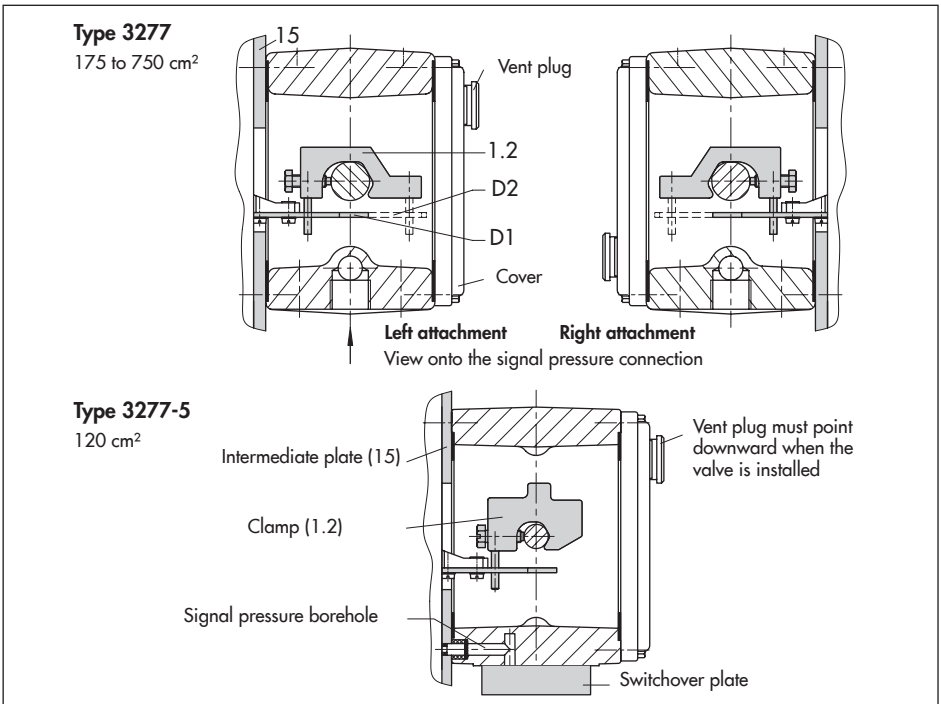

Fig. 5-2: *Mounting the clamp*

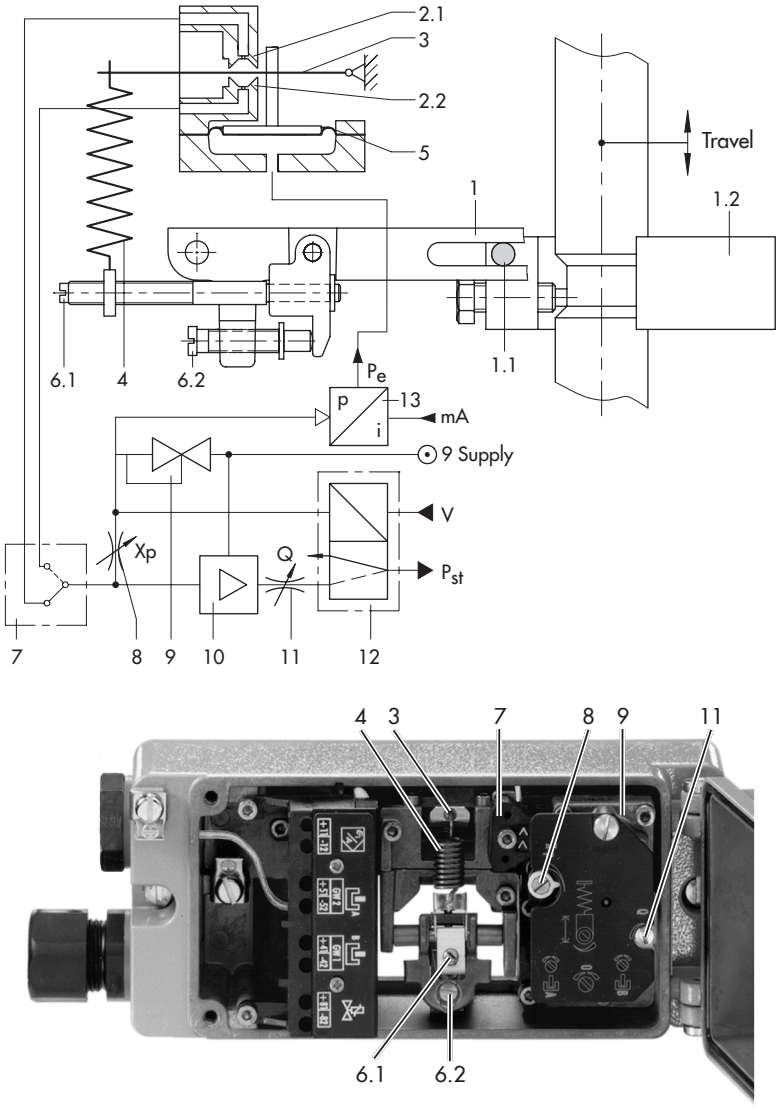

Fig. 5-3: *Functional diagram and inside view*

The old connection block version requires the switch plate (13) to be turned to align the actuator symbol with the arrow marking.

8. Place the connection block with the associated gaskets against the positioner and the actuator yoke. Fasten it using the screw.
   For actuators with fail-safe action "actuator stem retracts", additionally mount the external signal pressure pipe.

Actuator (120 cm²)

The signal pressure is transmitted to the diaphragm chamber over the switchover plate (Fig. 5-1 and Fig. 5-2, bottom).

7. Remove screw plug on the back of the positioner (Fig. 5-4) and seal the side signal pressure output with the stopper included in the accessories.
8. Mount the positioner so that the hole in the intermediate plate (15) covers the seal in the hole of the actuator yoke.
9. Align the switchover plate with the corresponding actuator symbol. Fasten it to the actuator yoke.

i ***Note***

If a solenoid valve or a similar device is additionally mounted onto a 120 cm² actuator, do not remove the M3 screw plug at the back of positioner. In this case, the signal pressure must be transmitted from the signal pressure output to the actuator over an additional connecting plate (Table 5-5). The switchover plate is not used in this case.

Air purging of the spring chamber

If the spring chamber of the actuator is to be purged with the exhaust air from the positioner, use piping (Table 5-5) to connect the spring chamber (with "actuator stem extends" version) to the connection block. To do so, remove the stopper from the connection block. For an actuator with fail-safe action "actuator stem retracts" and in Type 3277-5 Actuators with an effective diaphragm area of 120 cm², the exhaust air from the positioner is connected to the actuator chamber over an internal hole.

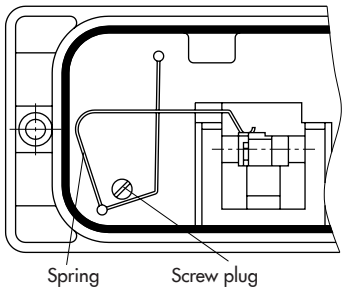

Fig. 5-4: *Installing the spring on the back of the housing*

5.3.2 Attachment according to IEC 60534-6

The rated travel of the valve determines which lever and range spring (see Table 5-1) are required.

An adapter housing is used for attachment (Fig. 5-6). The valve travel is transmitted by the lever (1) and the shaft (8) to the bracket (11) of the adapter housing and then passed on to the pin (10a) on the lever of the positioner. To ensure that the pin (10a) is proper-

Left attachment	Right attachment
Mounting position on the plate looking onto the travel pick-off (20), actuator facing upward (see also Fig. 5-6)	
Actuator with "actuator stem extends" (FA) fail-safe action	
Operating direction >> | Operating direction <>	Operating direction >> | Operating direction <>
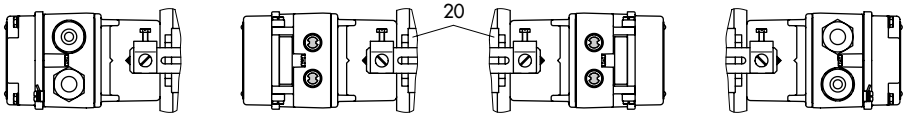	
Actuator with "actuator stem retracts" (FE) fail-safe action	
Operating direction >> | Operating direction <>	Operating direction >> | Operating direction <>
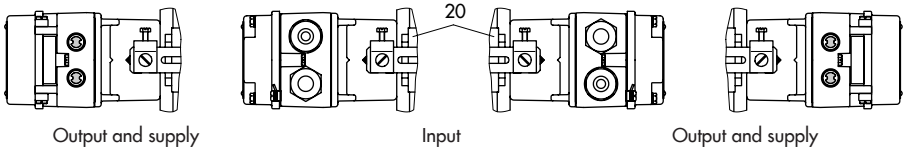	

Fig. 5-5: *Attachment to the left or right of the valve for NAMUR attachment (IEC 60534-6)*

Table 5-1: *Travel table*

Travel [mm] [1]	**7.5**	**15**	**15**	**30**	**30**	**60**	**30**	**60**	**60**	**120**
Pin at marking [1]	1	2	1	2	1	2	1	2	1	2
Distance between pin and lever fulcrum	42 to 84 mm						84 to 168 mm			
With lever	N1 (125 mm long)						N2 (212 mm long)			
Pin (27a) at position	A		A		B		A		B	
Required range spring (see Chapter 5.8)	2		1		1		1		1	

[1] Calculate intermediate values

ly located in the bracket (11), fix the spring included in the accessories at the back of the positioner housing as illustrated in Fig. 5-4.

The positioner can be mounted either on the left or right side of the control valve (Fig. 5-5). Turn the positioner at the adapter housing by 180° to determine or change the operating direction of the positioner/control valve unit.

a) Mounting sequence

➔ Required mounting parts and accessories: Table 5-6

➔ See Fig. 5-6

Valve with cast yoke

1. Screw the plate (3) to the stem connector of the actuator and plug stems using the countersunk screws.
   Use the additional mounting bracket (15) for 2100 and 2800 cm² actuators with 120 mm travel.
2. Remove the rubber stopper from the adapter housing and fasten the adapter housing either on the left or right of the NAMUR rib using the hex head screw as shown in Fig. 5-5.

Valve with rod-type yoke

1. Screw the plate (3) to the follower clamp of the plug stem.
2. Screw the studs (12) into the adapter housing.
3. Place the adapter housing with the plate (13) onto either the left or right valve rod (Fig. 5-5) and screw tight using the nut (14). Make sure that the adapter housing is at the correct height to mount the lever (1) so that it is in a horizontal position when the valve is at mid-travel.
4. Screw the pin (2) into the middle row of holes on the plate (3) and lock it into position over the correct lever marking (1 or 2) as indicated in Fig. 5-8.
5. Clamp the clip (4) onto the lever (1). The clip must be clamped onto the lever (1) with the open side facing downward when the positioner is attached with the air connection at the front.
6. Attach the lever (1) including clamping plate (5) to the shaft (8), making sure that the clip clasps the pin (2).

b) Initial adjustment of travel

1. Move the valve to 50 % travel.
2. Move the shaft (8) in the adapter housing so that the black pointer (7) matches the cast marking on the adapter housing.
3. Fasten the clamping plate (5) in this position using the screw (6).
4. Screw the pin (10a) into the positioner lever on the side where the press nut is located. Lock it in position with the hex nut on the other side, observing the mounting position **A** or **B** according to Table 5-1 and Fig. 5-6.
5. Place the positioner on the adapter housing, taking into account the mounting direction. Fasten it, making sure that the pin (10a) rests against the bracket (11).

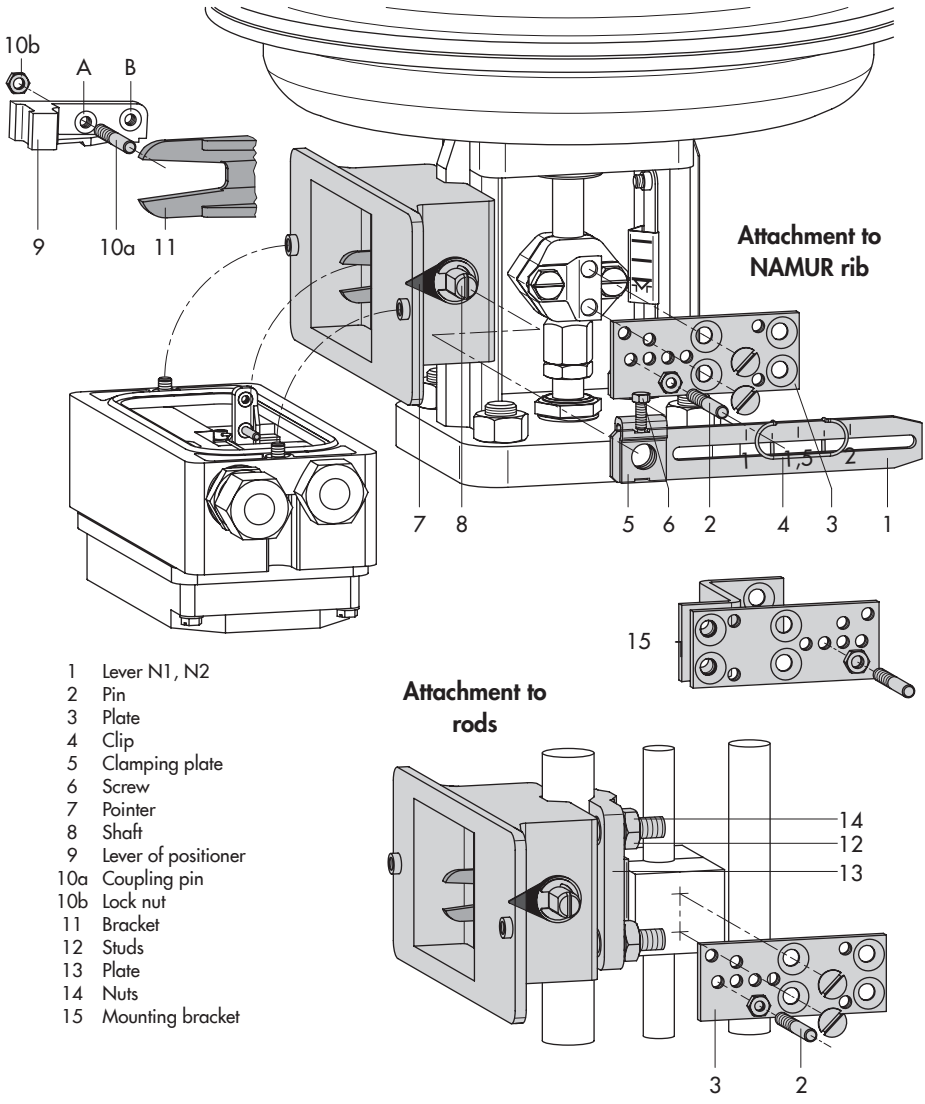

1 Lever N1, N2
2 Pin
3 Plate
4 Clip
5 Clamping plate
6 Screw
7 Pointer
8 Shaft
9 Lever of positioner
10a Coupling pin
10b Lock nut
11 Bracket
12 Studs
13 Plate
14 Nuts
15 Mounting bracket

Fig. 5-6: *Attachment according to IEC 60534-6 (NAMUR)*

The pin must not slip out of the bracket once installed.

6. Check whether the correct range spring has been installed as listed in Table 5-6.
7. Range spring 1 is installed as standard. If necessary, replace it with range spring 2 included in the accessories and fix it at the outer hook-in holes.
8. Perform positioner setting (see Chapter 5.5).

5.3.3 Attachment to rotary actuators

➔ Required mounting parts and accessories: Table 5-7

➔ See Fig. 5-7

Attachment to rotary actuators complies with VDI/VDE 3845 (September 2010) requirements. The rotary motion of these actuators is converted into a linear motion required by the pneumatic control unit of the positioner using the cam disk of the actuator shaft and a feeler roll on the positioner lever.

Double-acting springless rotary actuators require the use of a **reversing amplifier** on the connection side of the positioner housing (see Chapter 5.3.4).

When using a reversing amplifier, the pressure regulator (9, Fig. 5-3) must be turned clockwise as far as it will go (see Chapter 5.4.2).

When attaching the positioner to the SAMSON Type 3278 Rotary Actuator (Fig. 5-7, left), the inside of the actuator and the unused reverse side of the diaphragm are purged with the positioner's exhaust air. Additional piping is not required.

When attaching the positioner to actuators from other manufacturers, the reverse side of the diaphragm can be purged with air over a pipe connection installed between the actuator and intermediate piece.

➔ Check whether the correct range spring has been installed as listed in Table 5-7: range spring 1 is installed as standard. If necessary, replace it with range spring 2 included in the accessories and fix it at the outer hook-in holes.

a) Mounting the lever with feeler roll

1. Place the lever with feeler roll (3) on the side of the lever (5) opposite to where the press nuts are located and secure it using the supplied screws (6) and washers.
2. Attach the spring contained in the accessories kit (order no. 1400-6660) to the back of the positioner housing (see Fig. 5-4).

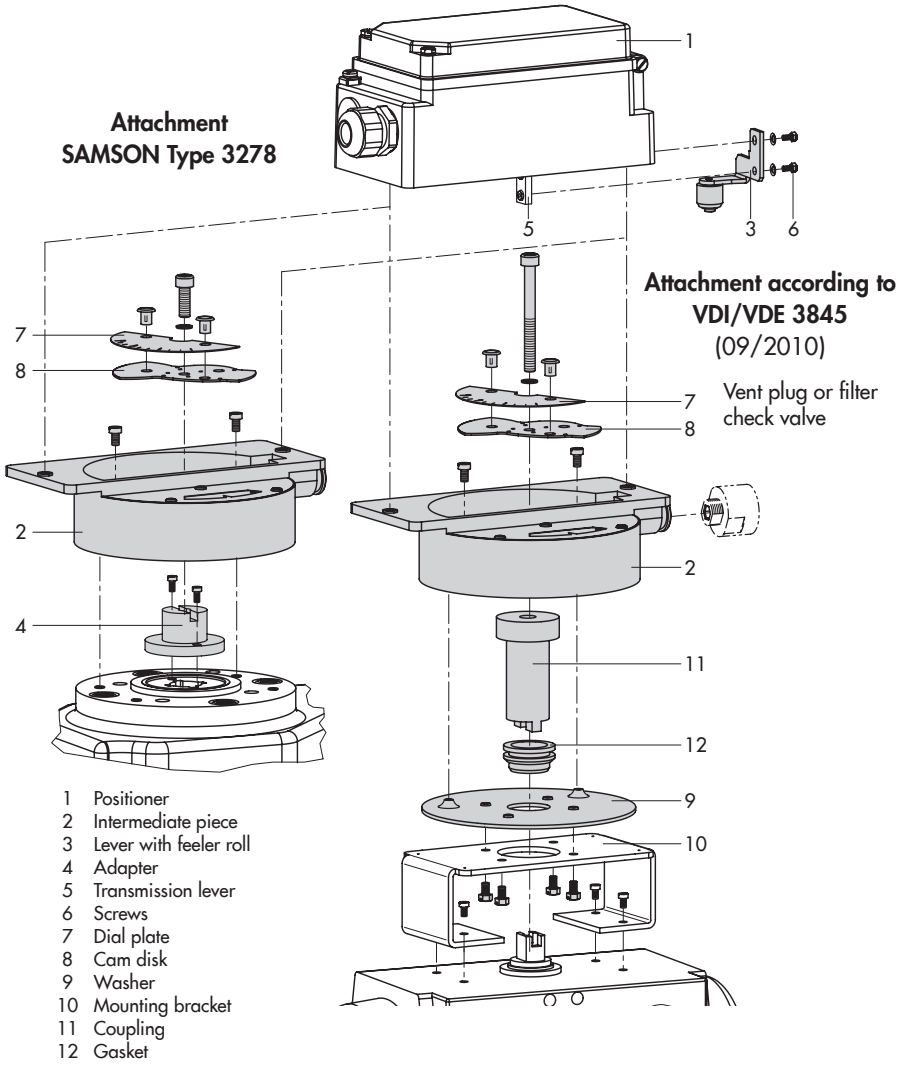

Fig. 5-7: *Attachment to rotary actuators*

b) Mounting the intermediate piece

SAMSON Type 3278 Actuator

1. Fasten the adapter (4) to the free shaft end of the rotary actuator.
2. Fasten the intermediate piece (2) to the actuator housing using two screws. Align the intermediate piece so that the air connections of the positioner point toward the diaphragm case side.
3. Align the cam disk (8) and scale (7) as described in Chapter 5.3.3 and fasten.

Actuators according to VDI/VDE 3845 (09/2010), fixing level 2

1. Place the assembled intermediate piece (2, 9, 11 and 12) onto the mounting bracket included in the scope of actuator delivery and fasten.
2. Align the cam disk (8) and scale (7) as described in Chapter 5.3.3 and fasten.

c) Basic setting of the cam disk

The valve model used determines the basic setting of the cam disk.

i ***Note***

Cam disks tailored to the special characteristic of a valve cause the valve to open in a non-linear or non-equal percentage way. The visible difference between the set point (4 to 20 mA) and the actual position (opening angle) does not constitute a system deviation of the positioner.

Fig. 5-8 and Fig. 5-9 show linear cam disks.

Fig. 5-8 illustrates a control valve assembly with a rotary actuator with spring-return mechanism that opens counterclockwise. The arrangement of the springs in the actuator determines the fail-safe position of the valve.

Fig. 5-9 shows how to adjust the cam disk when a double-acting springless rotary actuator is used. The direction of rotation (either counterclockwise or clockwise) depends on the actuator and valve model used. The cam disk must be set when the valve is closed.

Each cam disk carries two cam sections whose starting points are indicated by small holes. Depending on how the rotary actuator operates (air-to-open or air-to-close), the starting point of the cam, either marked **N** (standard characteristic) or **I** (reverse characteristic), must point towards the lever with feeler roll. When the starting point is located on the back of the cam disk, turn over the cam disk.

➔ Align the 0° position on the scale to correspond with the actuator's closed position.
In this case, for fail-open actuators and for springless actuators, apply the maximum supply pressure to the actuator before aligning the cam disk.

➔ Align the starting point (hole) of the cam selected so that the fulcrum of the cam disk and 0° position on the scale as well as the arrow on the window are in line with each other.

➔ When aligning the cam disk, clip the double-sided scale disk on the cam disk,

Single-acting rotary actuator with spring-return mechanism
Linear cam disk (equal percentage cam disk is represented by a broken and dotted line)
Control valve opens counterclockwise
For valves that open clockwise, the cam disk must be turned over so that lever with feeler roll moves over the same disk segments as shown in the images below, but with the cam disk turning clockwise.

Fail-safe action: **fail-close valve**

Operating direction increasing/increasing >>				**Operating direction increasing/decreasing <>**			
Set point	Signal pressure	Valve	Characteristic	Set point	Signal pressure	Valve	Characteristic
increases	increases	opens	N	decreases	increases	opens	I

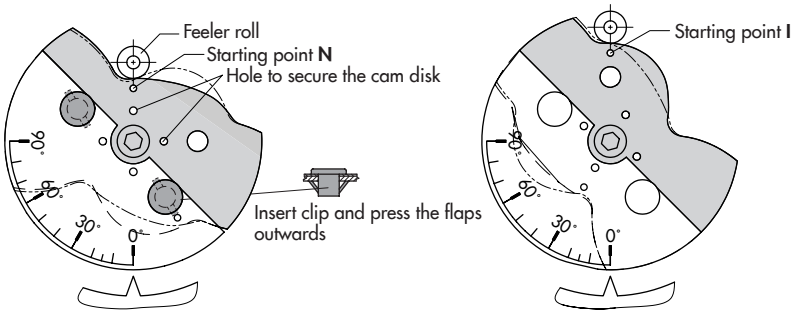

Fail-safe action: **fail-open valve**

Operating direction increasing/increasing >>				**Operating direction increasing/decreasing <>**			
Set point	Signal pressure	Valve	Characteristic	Set point	Signal pressure	Valve	Characteristic
decreases	decreases	opens	I	increases	decreases	opens	N

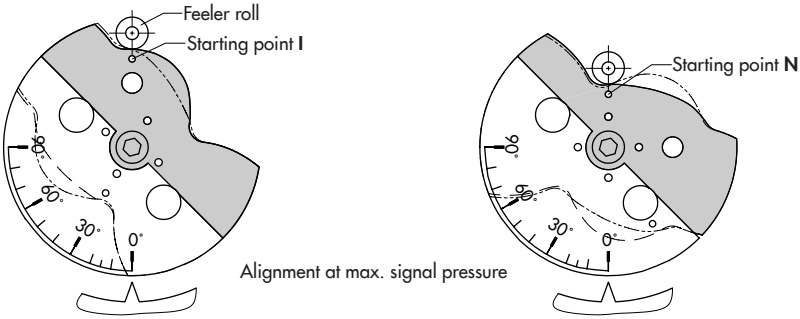

Fig. 5-8: *Cam disk settings for single-acting actuators*

Double-acting, springless rotary actuator with reversing amplifier
Linear cam disk (equal percentage cam disk is represented by a broken and dotted line)

View from the positioner onto the actuator shaft
Control valve opens counterclockwise – Based on a closed valve

Operating direction increasing/increasing >>				**Operating direction increasing/decreasing <>**			
Set point	Signal pressure	Valve	Charac-teristic	Set point	Signal pressure	Valve	Charac-teristic
increases	A1 increases, A2 decreases	opens	N	decreases	A1 increases, A2 decreases	opens	I

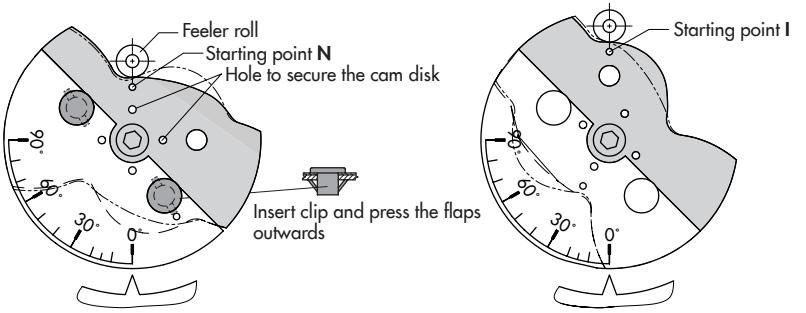

View from the positioner onto the actuator shaft
Control valve opens counterclockwise – Based on a closed valve

Operating direction increasing/increasing >>				**Operating direction increasing/decreasing <>**			
Set point	Signal pressure	Valve	Charac-teristic	Set point	Signal pressure	Valve	Charac-teristic
increases	A1 increases, A2 decreases	opens	N	decreases	A1 increases, A2 decreases	opens	I

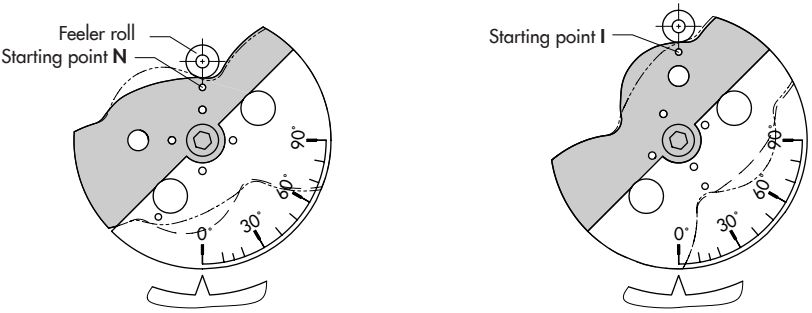

Fig. 5-9: *Cam disk settings for double-acting actuators*

while making sure that the value on the scale matches the valve's direction of rotation.

Securing the aligned cam disk

To prevent the cam disk from turning, drill a hole into the adapter (4) or coupling (11) to allow a 2 mm dowel pin to be inserted. Select one of the four holes located around the center hole of the cam disk to secure the cam disk in position.

5.3.4 Reversing amplifier for double-acting actuators

For the use with double-acting actuators, the positioner must be fitted with a reversing amplifier, e.g. the SAMSON Type 3710 Reversing Amplifier (see Mounting and Operating Instructions ▶ EB 8392).

The signal pressure of the positioner is supplied at the output A1 of the reversing amplifier. An opposing pressure, which equals the required supply pressure Z when added to the pressure at A1, is applied at output A2. The rule A1 + A2 = Z applies.

If a different reversing amplifier (item no. 1079-1118 or 1079-1119) is used, follow the mounting instructions described below:

Signal pressure connections

A1: Connect output A1 to the signal pressure connection on the actuator that causes the valve to open when the pressure rises.

A2: Connect output A2 to the signal pressure connection on the actuator that causes the valve to close when the pressure rises.

Pressure gauge attachment

The mounting sequence shown in Fig. 5-10 remains unchanged. Screw a pressure gauge bracket onto the connections A1 and Z.

Pressure gauge bracket:
– G ¼: 1400-7106
– ¼ NPT: 1400-7107

Pressure gauges for supply air Z and output A1 according to Chapter 5.8.

Mounting

i ***Note***

When using a reversing amplifier, the pressure regulator (9) must be turned as far as it will go in the clockwise direction.
Remove the sealing plug (1.5) before mounting the reversing amplifier. The rubber seal (1.4) must remain installed.

1. Screw the special nuts (1.3) from the accessories of the reversing amplifier into the threaded connections of the positioner.
2. Insert the gasket (1.2) into the recess of the reversing amplifier and slide both the hollowed special screws (1.1) into the connecting boreholes A1 and Z.
3. Place the reversing amplifier onto the positioner and screw tight using the two special screws (1.1).
4. Use a screwdriver (8 mm wide) to screw the enclosed filters (1.6) into the connection boreholes A1 and Z.

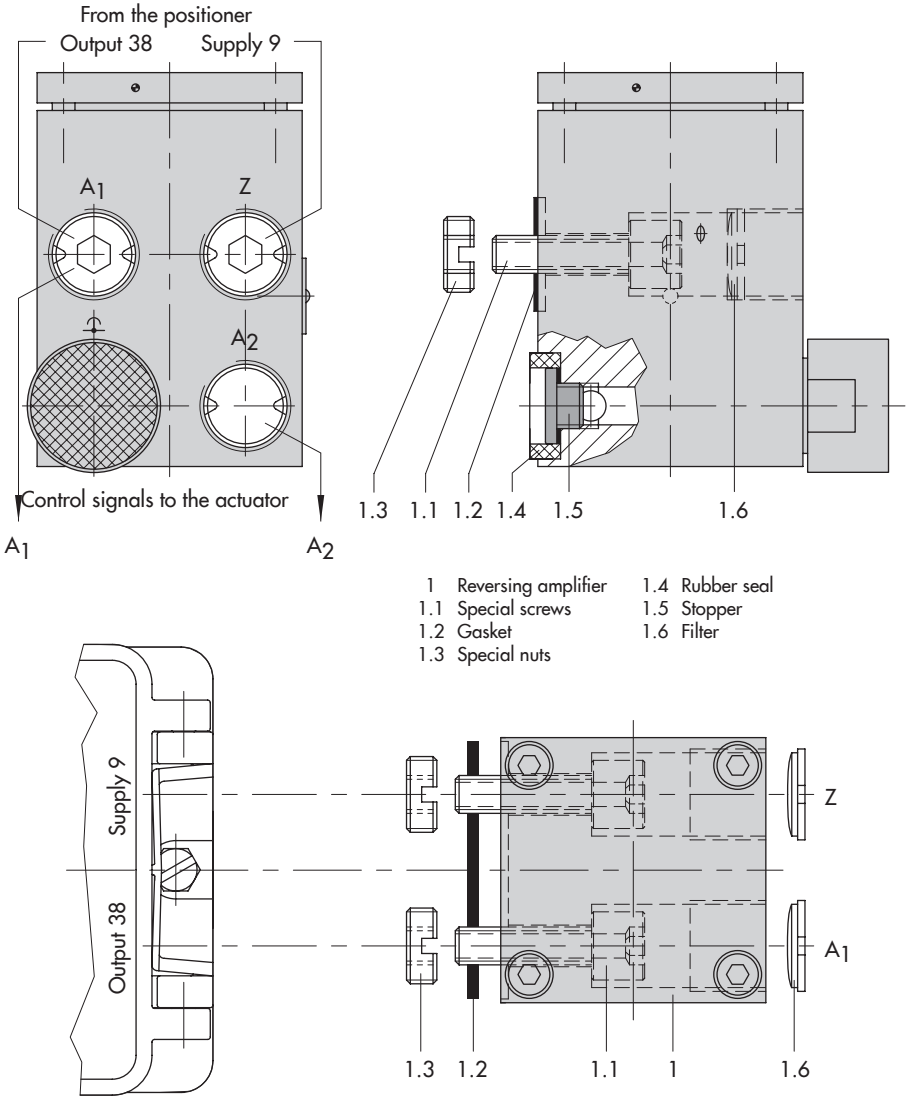

Fig. 5-10: *Mounting a reversing amplifier*

5.4 Pneumatic connection

⚠ WARNING

Risk of injury by possible movement of the actuator stem after connecting the signal pressure.

➔ *Do not touch or block the actuator stem.*

The pneumatic connections are optionally designed as a bore with ¼ NPT or G ¼ thread. Customary fittings for metal or copper tubing or plastic hoses can be used.

! NOTICE

Risk of malfunction due to failure to comply with air quality requirements.

➔ *Only use supply air that is dry and free of oil and dust.*

➔ *Read the maintenance instructions for upstream pressure reducing stations.*

➔ *Blow through all air pipes and hoses thoroughly before connecting them.*

If the positioner is attached directly to the Type 3277 Actuator, the connection of the positioner's output pressure to the actuator is fixed. For attachment according to IEC 60534-6 (NAMUR), the signal pressure can be routed to either the top or bottom diaphragm chamber of the actuator, depending on the actuator's fail-safe action "actuator stem extends" or "actuator stem retracts".

Exhaust air

Models with index 3767-x...x**.03** and higher are equipped with a hinged cover without its own exhaust air port. The exhaust air connections for these models are included in the accessories.

The vent plug is located on the plastic cover of the actuator for direct attachment, whereas for NAMUR attachment, it is located on the adapter housing. The vent plug is located on the intermediate piece or reversing amplifier for attachment to rotary actuators.

i Note

If you intend to replace older models with index 3767-x...x.02 or lower, the mounting parts may need to be replaced as well.

5.4.1 Pressure gauges

To precisely tune the positioner, we recommend installing pressure gauges for the supply air and signal pressure.

The required parts are listed as accessories in Chapter 5.8.

5.4.2 Supply pressure

The required supply air pressure depends on the bench range and the actuator's operating direction (fail-safe action).

The bench range is written on the nameplate either as the bench range or signal pressure range. The operating direction is marked **FA** or **FE** or by a symbol.

Actuator stem extends (FA): fail-close
(for globe and angle valves)

Required supply pressure =
Upper bench range value + 0.2 bar,
at least 1.4 bar.

Actuator stem retracts (FE): fail-open
(for globe and angle valves)

For tight-closing valves, the maximum signal pressure pstmax is roughly estimated as follows:

$$pst_{max} = F + \frac{d^2 \cdot \pi \cdot \Delta p}{4 \cdot A} \text{ [bar]}$$

d = Seat diameter [cm]
Δp = Differential pressure across the valve [bar]
A = Actuator area [cm²]
F = Upper bench range value of the actuator [bar]

If there are no specifications, calculate as follows:

Required supply pressure =

Upper bench range value + 1 bar

Pressure regulator

After tilting the cover plate back, the pressure regulator (9) can be continuously adjusted. When the adjuster is turned counterclockwise as far as it will go, signal pressures for spring ranges up to 2.5 bar are controlled. When the adjuster is turned clockwise all the way, signal pressures for spring ranges up to 6.0 bar are controlled.

If the signal pressure must not exceed a certain value, this limit can be adjusted using a pressure gauge (accessories).

5.5 Adjusting the positioner

⚠ WARNING

Intrinsic safety rendered ineffective in intrinsically safe devices.

➔ *Only connect intrinsically safe devices intended for use in intrinsically safe circuits to certified intrinsically safe input-connected units.*

➔ *Do not place intrinsically safe devices back into operation that were connected to intrinsically safe input-connected units without certification.*

➔ *Do not exceed the maximum permissible electric values specified in the EC type examination certificates when interconnecting intrinsically safe electrical equipment (U_i or U_0, I_i or I_0, P_i or P_0, C_i or C_0 and L_i or L_0).*

Starting point and set point

When adjusting the positioner directly at the control valve, the travel (opening angle) must be adapted to the set point.

– With a set point, for example 4 to 20 mA, the valve must move through its entire travel range from 0 to 100 % (Fig. 5-11, top).
– On mounting the positioner on rotary actuators, an opening angle, for example 0 to 70° must be assigned to the set point.
– The starting point is based on the CLOSED position of the valve. Depending on the control valve version ("actuator stem extends" or "actuator stem retracts") and the operating direction of the

positioner (>> or <>), this starting point can be either the lower or upper range value (4 or 20 mA) of the set point.

– The set point range and thus the upper range value determine the travel of the valve.
– In split-range operation (Fig. 5-11, below), the control valves work with smaller set point ranges. The controller output signal is used to control two control valves, dividing it such that the valves move through their entire travel range at half the input signal range each (e.g. first valve set to 4 to 12 mA, second valve set to 12 to 20 mA). To avoid overlapping, allow for a dead band of ± 0.5 mA as shown in Fig. 5-11.
– The **starting point** (zero) is adjusted at the zero adjuster (6.2); the span, i.e. the upper range value, is adjusted at the span adjuster (6.1).
– When the positioner is controlled by a computer whose signal is limited, e.g. between 4 to 20 mA, set the positioner to the range from 4.5 to 20 mA. This is the only way to ensure that the actuator is completely vented and the valve completely closed when the controller issues a 4 mA signal.
  For operating direction <>, set the range to 4 to 19.5 mA.

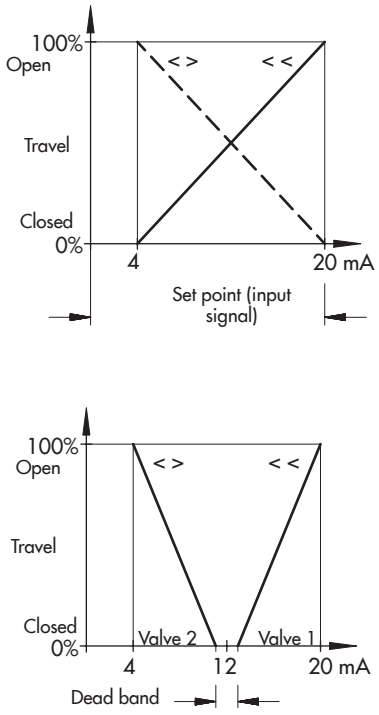

Fig. 5-11: *Normal or split-range operation*

➔ Connect an ammeter to the control signal input at the terminals 11 (+) and 12 (–).

➔ Connect the supply air to the supply input (supply 9).

5.5.1 Air output capacity and proportional band X_p

1. Close the volume restriction (11 in Fig. 5-3) as far as the required positioning speed permits.

Check the positioning speed by pushing the diaphragm lever (3 in Fig. 5-3) as far it will go.

2. Adjust the set point at the input to approx. 50 % of its range. Then turn the zero adjuster (6.2 in Fig. 5-3) until the valve is at approximately 50 % valve travel.
3. Use the adjuster (8 in Fig. 5-3) to set the proportional band X_p to a value half way (half turn).
4. Check the valve's tendency to hunt and the positioning speed by briefly tapping the diaphragm lever (3 in Fig. 5-3). The Xp value is to be adjusted to be as small as possible, without considerable overshooting occurring.

Additional points that apply concerning adjustment:

➔ Always adjust the Xp restriction before setting the starting point.

➔ In case of a zero shift (e.g. due to a subsequent change in the restriction setting or supply pressure), check the zero setting and readjust it.

– When the positioner is controlled by a computer whose signal is limited, e.g. between 4 to 20 mA, set the positioner to the range from 4.5 to 20 mA. This is the only way to ensure that the actuator is completely vented and the valve completely closed when the controller issues a 4 mA signal. For operating direction <>, set the range to 4 to 19.5 mA.

5.5.2 Zero and span

i ***Note***

When setting the zero adjuster (6.2 in Fig. *5-3), check whether the actuator is relieved of pressure. When the input signal is 4 mA and the operating direction >> or the input signal is 20 mA and the operating direction <>, the pressure gauge must indicate 0 bar.*

a) Actuator with "stem extends" fail-safe action

To ensure that the total closing force of the actuator acts on the valve, proceed as follows while adjusting the set point:

➔ With operating direction increasing/increasing <<: adjust starting point to 4.5 mA (slightly raised).

➔ With operating direction increasing/decreasing <>: adjust starting point to 19.5 mA (slightly lowered).

Starting point (zero) e.g. 4 mA

1. Turn the zero adjuster (6.2 in Fig. 5-3) until the valve just starts to move from its initial position.
2. Reduce the input signal to 0 mA and slowly increase it again. Check whether the valve starts to move at exactly 4.5 mA.
   Correct any deviation at the zero adjuster (6.2 in Fig. 5-3).

Upper range value (span) e.g. 20 mA

1. Once the starting point has been set, increase the input signal to 20 mA at the ammeter.

   At exactly 20 mA, the plug stem must stand still, having moved through 100 % travel (watch the travel indicator at the valve).

   If the upper range value is incorrect, turn the **span** adjuster (travel). Four turns correspond to a travel change of 10 % in standard operation. In split-range operation, this value is reduced by half.

   Turn the adjuster clockwise to reduce the travel and counterclockwise to increase it.
2. After the correction has been completed, reduce the input signal and slowly increase it again. Check the starting point and upper range value.
   Repeat the correction procedure until both values are correct.

b) Actuator with "stem retracts" fail-safe action

When using an actuator with fail-safe action "actuator stem retracts", the diaphragm chamber must be pressurized with a signal pressure that is high enough to tightly close the valve against the upstream pressure in the plant.

➔ Operating direction <<: Upper range value of set point 20 mA

➔ Operating direction <>: Lower range value of set point 4 mA

The required signal pressure is either indicated on the positioner label or it can be roughly calculated as described in Chapter 5.4.2.

Starting point, e.g. 20 mA

1. Turn the zero adjuster (6.2 in Fig. 5-3) until the valve just starts to move from its initial position.
2. Increase the input signal and slowly reduce it again to 20 mA. Check whether the valve starts to move at exactly 20 mA.
3. Correct any deviation at the zero adjuster (6.2 in Fig. 5-3). Turning the adjuster counterclockwise causes the valve to move from its end position earlier; turning clockwise causes the valve to move from its end position later.

Upper range value (span), e.g. 4 mA

1. Once the starting point has been set, adjust the input signal to 4 mA at the ammeter.
   At exactly 4 mA, the plug stem must stand still, having moved through 100 % travel (watch the travel indicator at the valve).
2. If the upper range value is incorrect, turn the span adjuster (travel). Four turns correspond to a travel change of 10 % in standard operation. In split-range operation, this value is reduced by half.
   Turn the adjuster clockwise to reduce the travel and counterclockwise to increase it.
3. After the correction has been completed, set the input signal to 20 mA again.

4. Turn the zero adjuster (6.2 in Fig. 5-3) again until the pressure gauge indicates the required signal pressure (see information under 'Supply pressure' in the 'Installation' chapter).

5.5.3 Adjusting the optional limit switches

The positioner version with inductive limit switches has two adjustable tags mounted on a rotary shaft which operate the associated proximity switches (1 in Fig. 5-12).

The operation of the inductive limit switches requires switching amplifiers to be connected in the output circuit (see Chapter 5.7.1).

When the tag (2) is located in the inductive field of the switch, the switch assumes a high resistance. When it moves outside the field, the switch assumes a low resistance.

The limit switches are usually adjusted to issue a signal for both end positions. The switching points can also be adjusted to indicate intermediate positions.

The switches **A** and **B** must be assigned to the end positions of the control valve (valve OPEN or CLOSED) depending on the operating direction and the mounting position according to Table 5-2 and Table 5-3.

The terminals 41/42 and 51/52 can optionally be assigned to the switches **A** and **B** by turning the associated label on the terminal block (also Fig. 5-14).

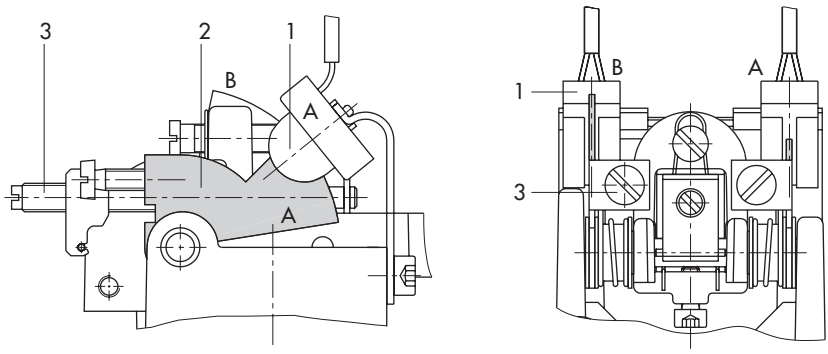

1 Proximity switches 2 Metal tag 3 Adjustment screw

Fig. 5-12: *Limit switches*

i Note

The tags of the limit switches cannot be turned by 360°. As a result, it is important to observe the correct assignment of switches A and B to the valve positions (valve CLOSED and valve OPEN), especially when the limit switches are to be connected in safety circuits.

The required switching function, i.e. whether the output relay is to be picked up or released when the tag enters the field, must be determined by jumpers for either load current or no-load current at the switching amplifier.

Adjusting the switching point

➔ Move the valve to the switching point and adjust the tag by turning the adjustment screw (3) so that the switching point is reached and indicated by the LED on the switching amplifier.

To guarantee the switching under all ambient conditions, adjust the switching point approx. 2 % before the mechanical stop (OPEN/CLOSED).

Table 5-2: *Assignment of switches A and B for direct attachment to Type 3277 Actuator (see Chapter 5.3.1)*

	Left attachment		Right attachment	
	Switch			
Valve position	Tag outside inductive field	Tag inside inductive field	Tag outside inductive field	Tag inside inductive field
Closed	B	A	A	B
Open	A	B	B	A

Table 5-3: *Assignments of switches A and B with attachment according to IEC 60534-6 (see Chapter 5.3.2) and attachment to rotary actuators (see Chapter 5.3.3)*

Operating direction	Valve position	Actuator stem extends (FA)		Actuator stem retracts (FE)	
		Switch Tag		Switch Tag	
		Outside inductive field	Inside inductive field	Outside inductive field	Inside inductive field
>>	Closed Open	B A	A B	A B	B A
<>	Closed Open	A B	B A	B A	A B

5.6 Adjusting the optional position transmitter

The starting point (zero) and upper range value (span) must be set before adjusting the position transmitter (see Chapter 5.5.2).

Depending on the position of the multi-pin connector (symbol on connector: >> or <>), the feedback signal can be set to either a range of 4 to 20 mA or 20 to 4 mA for 0 to 100 % travel.

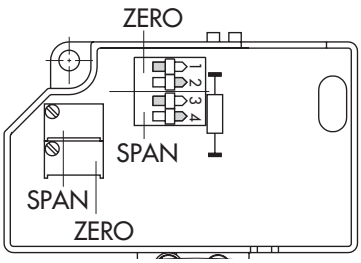

Fig. 5-13: *Position transmitter*

Zero point

Use the switches 1 and 2 to roughly set the zero point and the ZERO potentiometer for fine-tuning. The adjusted value is always based on a 4 mA signal.

Span

Use the switches 3 and 4 to roughly set the span, i.e. the upper range value and the SPAN potentiometer for fine-tuning. The adjusted value is always based on a 20 mA signal.

Example:

Move the valve to the open position while observing the position transmitter signal.

If the signal does not move in the desired direction, change the position of the multi-pin connector.

Adjust the zero point (4 mA) and span (20 mA) for the valve positions according to Table 5-4.

Table 5-4: *Position transmitter*

Valve movement	Observed feedback signal	Direction of signal	Set zero/span to	
Open ↑ Closed	Signal increases ↑	OK	20 mA 4 mA	Valve OPEN Valve CLOSED
		Not OK → Change connector's position	4 mA 20 mA	Valve OPEN Valve CLOSED
	Signal drops ↓	OK	4 mA 20 mA	Valve OPEN Valve CLOSED
		Not OK → Change connector's position	20 mA 4 mA	Valve OPEN Valve CLOSED

Zero adjustment

1. Use the input signal of the positioner to move the valve to closed position (valve CLOSED, travel 0 %).
2. The ammeter must now indicate approx. 4 mA.
3. Correct smaller deviations at the ZERO potentiometer until the meter shows exactly 4 mA.
   For larger deviations that cannot be corrected using the potentiometer (adjustment range of approx. 20 turns), set the switches 1 and 2 to indicate an mA value which is within the adjustment range of the ZERO potentiometer.
4. Set the zero point to exactly 4 mA using the ZERO potentiometer.

Span adjustment

1. Use the input signal of the positioner to move the valve to closed position (valve CLOSED, travel 100 %).
2. The ammeter must now indicate approx. 20 mA.
3. Correct smaller deviations at the SPAN potentiometer until the meter shows exactly 20 mA. If deviations are too high, set the switches 3 and 4 to indicate an mA signal which is within the adjustment range of the SPAN potentiometer.
4. Turn the SPAN potentiometer until the ammeter shows exactly 20 mA.
   Since the zero point and span have a mutual influence on each other, repeat the correction procedure at both potentiometers until both values are correct.

Every time you make a change as described above, the zero point and span of the positioner must be readjusted before adjusting the position transmitter.

---

i ***Note***

The following applies to positioners with adapter housing for NAMUR attachment:
When the positioner and the position transmitter signal have different operating directions (<< and <>), it may be impossible to adjust the zero point of the transmitter signal due to the additional deflection caused by the bracket (28) of the adapter housing.
In this case, readjust the black pointer so that the sensor of the position transmitter reaches the control range (see Chapter 5.3.2 b)). Unscrew the clamp. For "actuator stem extends" (FA), shift the pointer upward towards the actuator; for "actuator stem retracts" (FE), shift the pointer downward towards the valve. For valves with rod-type yoke, slightly shift the positioner on the rod in the downward (FE) or upward (FA) direction.

5.7 Electrical connection

For electrical installation, observe the relevant electrotechnical regulations and the accident prevention regulations that apply in the country of use. In Germany, these are the VDE regulations and the accident prevention regulations of the employers' liability insurance.

⚠ WARNING

Incorrect electrical connection will render the explosion protection unsafe.

➔ *Adhere to the terminal assignment.*

➔ *Do not undo the enameled screws in or on the enclosure.*

⚠ WARNING

Intrinsic safety rendered ineffective in intrinsically safe devices.

➔ *Only connect intrinsically safe devices intended for use in intrinsically safe circuits to certified intrinsically safe input-connected units.*

➔ *Do not place intrinsically safe devices back into operation that were connected to intrinsically safe input-connected units without certification.*

➔ *Do not exceed the maximum permissible electric values specified in the EC type examination certificates when interconnecting intrinsically safe electrical equipment (U_i or U_0, I_i or I_0, P_i or P_0, C_i or C_0 and L_i or L_0).*

Selecting cables and wires

Observe **clause 12 of EN 60079-14: 2008** (VDE 0165, Part 1) for installation of the intrinsically safe circuits.

Clause 12.2.2.7 applies when running multicore cables and wires with more than one intrinsically safe circuit.

The radial thickness of the insulation of a conductor for common insulating materials (e.g. polyethylene) must not be smaller than 0.2 mm.

The diameter of an individual wire in a fine-stranded conductor must not be smaller than 0.1 mm. Protect the conductor ends against splicing, e.g. by using wire-end ferrules.

When two separate cables are used for connection, an additional cable gland can be installed.

Seal cable entries left unused with plugs.

Fit equipment used in ambient temperatures **below –20 °C** with metal cable entries.

Zone 2/Zone 22

In equipment operated according to type of protection Ex nA II (non-sparking equipment) according to EN 60079-15:2003, circuits may be connected, interrupted or switched while energized only during installation, maintenance or repair.

Equipment connected to energy-limited circuits with type of protection Ex nL according to EN 60079-15:2003 may be switched under normal operating conditions.

The maximum permissible values specified in the statement of conformity and its addenda apply when interconnecting the equipment with energy-limited circuits in type of protection Ex nL IIC.

The wires for the set point must be connected to the terminals 11 and 12 located in the housing.

In general, it is not necessary to connect the device to a bonding conductor. Should this be required, however, this conductor can be connected inside the device or outside on the device.

Depending on the version, the positioner is equipped with inductive limit switches and/or a solenoid valve.

Versions with position transmitter do not permit the connection of additional equipment.

The position transmitter is operated on a two-wire circuit. The usual supply voltage is 24 V DC.

Taking the resistance of the supply leads into account, the voltage at the position transmitter terminals can be between 12 and 45 V DC.

Refer to Fig. 5-14 or to the label on the terminal block.

5.7.1 Switching amplifier

The operation of the inductive limit switches requires switching amplifiers in accordance with EN 60947-5-6 to be connected in the output circuit. Observe the relevant regulations for installation in hazardous areas.

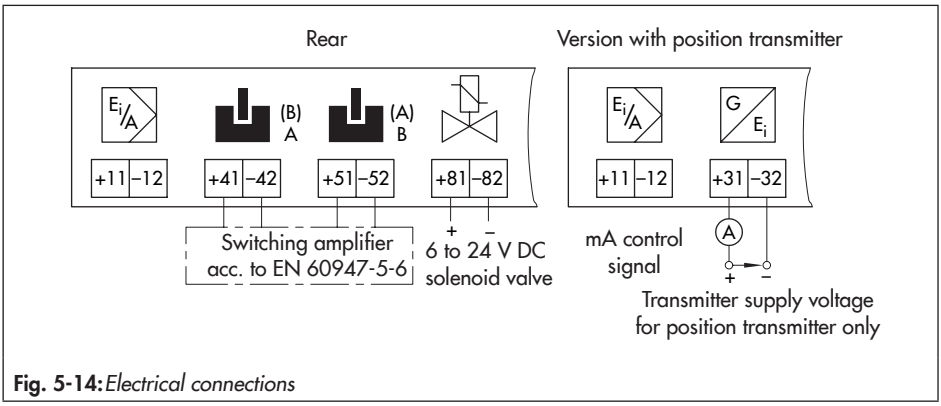

Fig. 5-14: *Electrical connections*

5.8 Mounting accessories

Table 5-5: *Accessories and mounting kits for direct attachment to Type 3277*

Lever			**Mounting kit**
Actuator size	Lever with associated clamp and intermediate plate		Order no.
120 cm²	D1 lever with stopper for output (38)	Standard version	1400-7116
		Version compatible with paint	1402-0944
175 to 750 cm²	D1 lever (33 mm long with 17 mm clamp)	Standard version	1400-6370
		Version compatible with paint	1402-0942
355 to 750 cm²	D2 lever (44 mm long with 13 mm clamp)	Standard version	1400-6371
		Version compatible with paint	1402-0943

Switchover plates and connecting plates		Order no.
Switchover plate (for 120 cm² actuator)	Type 3277-5xxxxxx**.00** Actuator (old)	1400-6819
New switchover plate	Type 3277-5xxxxxx**.01** Actuator (new) or higher	1400-6822
Connecting plate for additional attachment of, e.g. a solenoid valve	Type 3277-5xxxxxx**.00** Actuator (old), G ⅛ Type 3277-5xxxxxx**.00** Actuator (old), ⅛ NPT	1400-6820 1400-6821
New connecting plate	Type 3277-5xxxxxx**.01** Actuator (new) or higher G ⅛ and ⅛ NPT	1400-6823
Note: *Only new switchover and connecting plates can be used with new actuators (Index **01**). Old and new plates are not interchangeable.*		
Required connection block for 240, 350, 355 and 700 cm² actuator (including gaskets and fastening screw)	G ¼	1400-8819
	¼ NPT	1402-0901

Pipe connection	Material	Actuator size [cm²]	Order no.
Required pipe connection including screw fitting For actuator with "actuator stem retracts" or with air purging of the top diaphragm chamber	Steel	240	1400-6444
	Stainless steel	240	1400-6445
	Steel	350	1400-6446
	Stainless steel	350	1400-6447
	Steel	355/700	1400-6448
	Stainless steel	355/700	1400-6449

Range spring	Travel [mm]	Actuator size [cm²]	Order no.
2 (4.5 coils)	7.5	120 to 240	1400-6443
1 (9.5 coils, installed as standard)	10 to 15	120 to 350	1400-6442
2	15	355 to 750	1400-6443
1	30	355 to 750	1400-6442

Accessories		Order no.
Pressure gauge mounting block (only for 120 cm²)	G ¼	1400-7458
	¼ NPT	1400-7459
Pressure gauge mounting kit for supply pressure and signal pressure	Stainless steel/brass	1402-1637
	Stainless steel/stainless steel	1402-1638
Filter check valve, replaces vent plug and increases the degree of protection to IP65		
Filter check valve integrated into a screw-on body with G ¼ thread	Polyamide, IP65 degree of protection	1790-7408
	1.4301, IP65 degree of protection	1790-7253
	Polyamide, NEMA 4 degree of protection	1790-9645
	1.4301, NEMA 4 degree of protection	1790-9646
Assortment of spare parts including gaskets and diaphragms		1400-9895

Table 5-6: *Accessories and mounting kits for attachment according to IEC 60534-6*

Mounting kits	Control valve		Travel [mm]	With lever	Order no.
NAMUR mounting kit (see Fig. 5-6 for parts)	Valve with cast yoke		7.5 to 60	N1 (125 mm)	1400-6787
			22.5 to 120	N2 (212 mm)	1400-6789
	Rod diameter [mm] of rod-type yoke	20 to 25		N1	1400-6436
		20 to 25		N2	1400-6437
		25 to 30		N1	1400-6438
		25 to 30		N2	1400-6439
		30 to 35		N1	1400-6440
		30 to 35		N2	1400-6441
Attachment to Fisher and Masoneilan linear actuators (one of each mounting kits is required per actuator)					1400-6771 and 1400-6787
Additional range spring acc. to Table 5-1	Range spring 1 (9.5 coils, installed as standard) Range spring 2 (4.5 coils)				1400-6442 1400-6443
Accessories					Order no.
Pressure gauge mounting block			G ¼		1400-7458
			¼ NPT		1400-7459
Pressure gauge kit			Stainless steel/brass		1402-1637
			Stainless steel/stainless steel		1402-1638

Filter check valve, replaces vent plug and increases the degree of protection to IP65		
Filter check valve integrated into a screw-on body with G ¼ thread	Polyamide, IP65 degree of protection	1790-7408
	1.4301, IP65 degree of protection	1790-7253
	Polyamide, NEMA 4 degree of protection	1790-9645
	1.4301, NEMA 4 degree of protection	1790-9646
Assortment of spare parts including gaskets and diaphragms		1400-9895

Table 5-7: *Accessories and mounting kits for attachment to rotary actuators*

Complete mounting parts, including range spring 2, but not including the cam disk		Order no.
Actuator acc. to VDI/VDE 3845 (September 2010), fixing level 2		1400-8815
SAMSON Type 3278 Actuator VETEC Type S	160 cm²	1400-7103
	320 cm²	1400-7104
VETEC Type R	R 110 to R 250	1400-7117
Attachment Masoneilan	Camflex I, DN 25 to 100	1400-7118
	Camflex I, DN 125 to 250	1400-7119
	Camflex II	1400-7120
Required range spring		Order no.
Standard operation of set point, range spring 2 (4.5 coils)		1400-6443
Split-range operation, range spring 1 (9.5 coils, installed as standard)		1400-6442
Cam disk with accessories		Order no.
~, linear basic characteristic [3] ~, equal percentage basic characteristic [3] ~, linear [1] ~, equal percentage [2] ~, linear [1] ~, equal percentage [2] ~, linear [1] ~, equal percentage [2]	(0050-0072), 0 to 90° opening angle, also for Type 3310 (0050-0073), 0 to 90° opening angle (0050-0080), 0 to 70° opening angle, for control butterfly valves (0050-0081), 0 to 70° opening angle, for control butterfly valves (0050-0074, VETEC), 0 to 75° opening angle (0050-0075, VETEC), 0 to 75° opening angle (0059-0007, Camflex) to be set between 0 and 55° (0059-0008, Camflex) to be set between 0 and 55°	1400-6664 1400-6665 1400-6774 1400-6775 1400-6666 1400-6667 1400-6637 1400-6638
Accessories		
See list on page 5-30		

[1] Linearizes the flow characteristic
[2] Creates an equal percentage flow characteristic
[3] Based on opening angle

Table 5-8: *Accessories for electrical connection*

Device index 3767-x...x. and lower **03:**

Cable gland PG 13.5	
Version	**Order no.**
Black plastic	1400-6781
Blue plastic	1400-6782
Nickel-plated brass	1400-6979

Adapter PG 13.5 to ½ NPT	
Version	**Order no.**
Metal	1400-7109
Painted blue	1400-7110

Device index 3767-x…x. and higher: **04:**

M20x1.5 cable gland		
Version	**Clamping range**	**Order no.**
Black plastic	5.5 to 13 mm	1400-6985
Blue plastic	5.5 to 13 mm	1400-6986
Nickel-plated brass	6 to 12 mm	1890-4875

M20x1.5 to ½ NPT adapter	
Version	**Order no.**
Powder-coated aluminum	0310-2149

6 Start-up

The work described in this chapter is only to be performed by personnel appropriately qualified to carry out such tasks.

⚠ DANGER

Risk of fatal injury due to the ignition of an explosive atmosphere.

➔ *Observe EN 60079-14 (VDE 0165, Part 1) for work on the positioner in hazardous areas.*

➔ *Work in hazardous areas must only be performed by personnel who has undergone special training or instructions or who is authorized to work on explosion-protected devices in hazardous areas.*

⚠ WARNING

Crush hazard arising from moving parts on the valve.

➔ *Do not touch any moving valve parts while the control valve is in operation.*

➔ *Before performing any mounting or installation work on the positioner, put the control valve out of operation by disconnecting and locking the supply air and control signal.*

➔ *Do not impede the movement of the actuator and plug stem by inserting objects into the yoke.*

Before start-up, make sure the following conditions are met:

– The positioner is properly mounted according to the instructions.

– The pneumatic and electrical connections have been performed according to the instructions.

Start-up

➔ Open the supply air line to the positioner.

➔ Switch on the electrical power supply.

7 Operation

The positioner is ready for use after it has been mounted and the pneumatic and electric connections have been established (see the 'Installation' chapter).

⚠ WARNING

Crush hazard arising from moving parts on the valve.

➔ *Do not touch any moving valve parts while the control valve is in operation.*

➔ *Before performing any mounting or installation work on the positioner, put the control valve out of operation by disconnecting and locking the supply air and control signal.*

➔ *Do not impede the movement of the actuator and plug stem by inserting objects into the yoke.*

8 Malfunction

⚠ DANGER

Risk of fatal injury due to the ignition of an explosive atmosphere.

➔ *Observe EN 60079-14 (VDE 0165, Part 1) for work on the positioner in hazardous areas.*

➔ *Work in hazardous areas must only be performed by personnel who has undergone special training or instructions or who is authorized to work on explosion-protected devices in hazardous areas.*

⚠ WARNING

Crush hazard arising from moving parts on the valve.

➔ *Do not touch any moving valve parts while the control valve is in operation.*

➔ *Before performing any mounting or installation work on the positioner, put the control valve out of operation by disconnecting and locking the supply air and control signal.*

➔ *Do not impede the movement of the actuator and plug stem by inserting objects into the yoke.*

8.1 Troubleshooting

➔ See Table 8-1

i *Note*

Contact SAMSON's After-sales Service for malfunctions not listed in the table.

8.2 Emergency action

Upon failure of the air supply or electric signal, the positioner vents the actuator, causing the valve to move to the fail-safe position determined by the actuator.

Tip

Emergency action in the event of valve or actuator failure is described in the associated valve and actuator documentation.

➔ Plant operators are responsible for emergency action to be taken in the plant.

Table 8-1: *Troubleshooting*

Description of fault	Measures
Actuator moves too slowly.	➔ Check the supply pressure. ➔ Check the cross-section of the piping and screw fittings. ➔ Check the configuration of the mounting parts.
Actuator moves in the wrong direction.	➔ Check piping. ➔ Check the configuration of the mounting parts.
Air leaks from the positioner.	➔ Check the seals in the connecting plate.
The set point span is not reached at a 100 % signal.	➔ Check whether the correct range spring has been selected. ➔ Check the adjusted air output and proportional band. ➔ Check the adjusted span.
Zero is not reached at a 0 % signal.	➔ Check the adjusted zero.
Limit switch does not work properly	➔ Check the limit switch setting. ➔ Check the wiring and polarity of signal wires.
The solenoid valve frequently switches.	➔ Check the supply voltage.
The position transmitter does not work.	➔ Check zero and span at the position transmitter. ➔ Check the wiring.

9 Servicing

The work described in this chapter is only to be performed by personnel appropriately qualified to carry out such tasks.

⚠ DANGER

Risk of fatal injury due to the ignition of an explosive atmosphere.

➔ *Observe EN 60079-14 (VDE 0165, Part 1) for work on the positioner in hazardous areas.*

➔ *Work in hazardous areas must only be performed by personnel who has undergone special training or instructions or who is authorized to work on explosion-protected devices in hazardous areas.*

⚠ WARNING

Intrinsic safety rendered ineffective in intrinsically safe devices.

➔ *Only connect intrinsically safe devices intended for use in intrinsically safe circuits to certified intrinsically safe input-connected units.*

➔ *Do not place intrinsically safe devices back into operation that were connected to intrinsically safe input-connected units without certification.*

➔ *Do not exceed the maximum permissible electric values specified in the EC type examination certificates when interconnecting intrinsically safe electrical equipment (U_i or U_0, I_i or I_0, P_i or P_0, C_i or C_0 and L_i or L_0).*

⚠ WARNING

Crush hazard arising from actuator and plug stem moving.

➔ *Do not touch any moving valve parts while the control valve is in operation.*

➔ *Before performing any mounting or installation work on the positioner, put the control valve out of operation by disconnecting and locking the supply air and control signal.*

➔ *Do not impede the movement of the actuator and plug stem by inserting objects into the yoke.*

➔

The positioner was checked by SAMSON before it left the factory.

– The product warranty becomes void if service or repair work not described in these instructions is performed without prior agreement by SAMSON's After-sales Service.

– Only use original spare parts by SAMSON, which comply with the original specifications.

The positioner does not require any maintenance.

➔ Observe the maintenance instructions of any upstream supply air pressure reducing stations.

9.1 Changing the operating direction of the positioner control loop

Direct attachment to Type 3277

If the operating direction of the positioner is to be changed after it has been mounted, turn the turnboard and change the position of the connection block, positioner and clamp for direct attachment (see the 'Installation' chapter).

Attachment according to IEC 60534-6

For attachment according to IEC 60534-6, turn the turnboard and the positioner on the adapter housing.

Attachment to rotary actuators

For positioners mounted on rotary actuators, reassign the cam disk and turn the turnboard.

9.2 Converting a positioner from electropneumatic to pneumatic

The electropneumatic positioner can be converted into a Type 3766 Pneumatic Positioner with the following conversion kit:

➔ Order number for M20x1.5 conversion kit: 1400-7575

➔ See Fig. 9-1

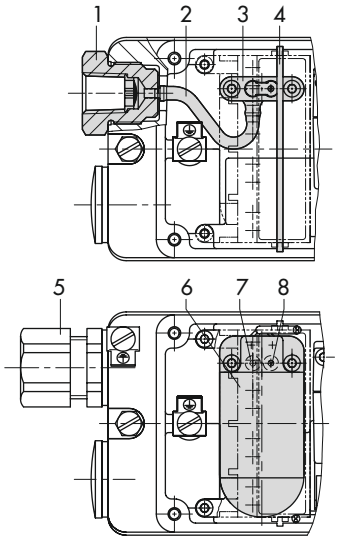

1 Screw fitting
2 Silicone hose
3 Connecting plate
4 Guard plate
5 Cable gland
6 i/p converter module
7 Gasket
8 Gasket

Fig. 9-1: *Converting the positioner*

1. Remove the holder with the terminal block. Disconnect the cable to the i/p module.
2. Unscrew the fastening screws and remove the i/p module (6) including the seals (7 and 8).
3. Place the connecting plate (3) with the seal on the housing bores and screw tight. The restriction must be seated in the seal above the right inner bore.

4. Replace the cable gland (5) with the pneumatic screw fitting (1).
5. Connect the silicone hose (2) and insert the guard plate (4) into the housing.
6. Remount the holder with terminal block.
7. Change type designation (model number) on the nameplate to Type 3766 Pneumatic Positioner.

i ***Note***

For details on Type 3766 Positioners, refer to Mounting and Operating Instructions ▶ *EB 8355-1.*

9.3 Installing the limit switches

➔ Order number for retrofit kit
Index .03: 1400-6389
Index .04/.05: 1400-7573
Index .06 and higher: 1400-8810

➔ See Fig. 9-2

1. Unscrew the bracket with plate (1).
2. Remove the screws (2) and replace the entire set point calibrator (3) with a calibrator including limit switches. Make sure the O-ring is inserted into the housing.
3. Attach the terminal block for the limit signals 41/42 and 51/52 in the terminal base.
4. Guide the connecting cable to the terminals and fasten.
(brown = +, blue = –)
5. Refasten the bracket with plate (1) and stick the adhesive label for the limit switches on the housing cover.
6. Screw additional cable gland onto the housing.

9.4 Installing the solenoid valve

➔ Order number for retrofit kit
Index .05 and lower: 1400-7122
Index .06 and higher: 1400-8808

➔ See Fig. 9-2

1. Push the plate (5) to one side.
2. Unscrew the four screws (7). Lift off the black cover with the rubber gasket and insert the solenoid valve (6). The rubber gasket with the restriction is located in the rear of the solenoid valve.
3. Unscrew the plate (1).
4. Attach the terminal block (10) for the solenoid valve in the terminal base.
5. Insert the panel (9) at the rear of the positioner and attach it to the set point calibrator using two screws.
6. Guide the connecting cable down behind the mounted panel of the set point calibrator and up again to terminals 81/82 and fasten (brown = plus, blue = minus).
7. Screw on the bracket with plate (1).
8. Screw additional cable gland onto the housing.

9.5 Removing the solenoid valve

➔ Order number for cover for solenoid valve opening: 1400-6949

➔ See Fig. 9-2

1. Unscrew bracket with plate (1). Remove the connecting cable of the solenoid valve from terminals 81/82.
2. Unscrew the two screws (7) that are not sealed with paint and remove the solenoid valve with its connecting cable.
3. Place the rubber gasket on the spigot of the cover and screw it into the housing.
4. Screw on the bracket with plate (1).

9.6 Periodic inspection and testing of the positioner

We recommend inspection and testing according to Table 9-1 at the minimum.

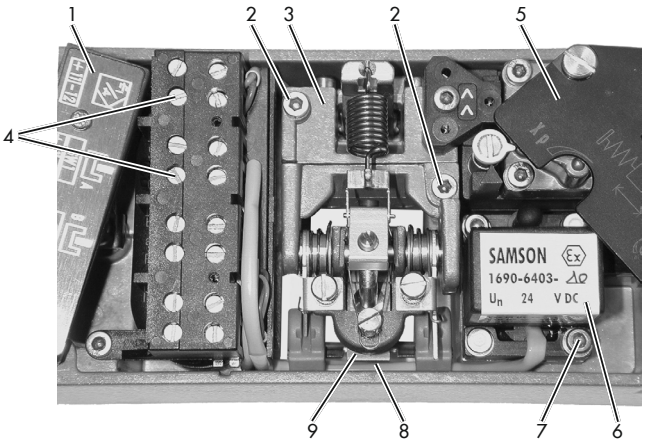

1 Label
2 Screw
3 Cover with rubber seal
4 Terminal block
5 Plate
6 Solenoid valve
7 Screw
8 Seals
9 Metal plate

Fig. 9-2: *Installing the limit switches and solenoid valve*

Table 9-1: *Recommended inspection and testing*

Inspection and testing	Action to be taken in the event of a negative result
Check the markings, labels and nameplates on the positioner for their readability and completeness.	Immediately renew damaged, missing or incorrect nameplates or labels.
	Clean any inscriptions that are covered with dirt and are illegible.
Check the positioner and leakage sensor (if installed) to ensure they are mounted firmly.	Tighten the any loose mounting screws.
Check the pneumatic connections.	Tighten any loose male connectors of the screw fittings.
	Renew any air pipes or hoses that leak.
Check the power supply wires.	Tighten any loose cable glands.
	Make sure that the stranded wires are pushed into the terminals and tighten any loose screws on the the terminals.
	Renew damaged lines.

10 Decommissioning

The work described in this chapter is only to be performed by personnel appropriately qualified to carry out such tasks.

⚠ DANGER

Risk of fatal injury due to the ignition of an explosive atmosphere.

➔ *Observe EN 60079-14 (VDE 0165, Part 1) for work on the positioner in hazardous areas.*

➔ *Work in hazardous areas must only be performed by personnel who has undergone special training or instructions or who is authorized to work on explosion-protected devices in hazardous areas.*

❗ *NOTICE*

The process is disturbed by interrupting closed-loop control.

➔ *Do not mount or service the positioner while the process is running and only after isolating the plant by closing the shut-off valves.*

To decommission the positioner before removing it, proceed as follows:

➔ Put the control valve out of operation. See associated valve documentation.

➔ Shut off and lock the supply air line to the positioner.

➔ Disconnect and lock the electrical power supply.

11 Removal

The work described in this chapter is only to be performed by personnel appropriately qualified to carry out such tasks.

⚠ DANGER

Risk of fatal injury due to the ignition of an explosive atmosphere.

➔ *Observe EN 60079-14 (VDE 0165, Part 1) for work on the positioner in hazardous areas.*

➔ *Work in hazardous areas must only be performed by personnel who has undergone special training or instructions or who is authorized to work on explosion-protected devices in hazardous areas.*

➔ Put the positioner out of operation (see the 'Decommissioning' chapter).

➔ Disconnect the wires for electrical input and remove them from the positioner.

➔ Unscrew screw fittings for supply pressure/output at the positioner.

➔ To remove the positioner, loosen the fastening screws on the positioner.

12 Repairs

A defective positioner must be repaired or replaced.

NOTICE

Risk of positioner damage due to incorrect service or repair work.

➔ *Do not perform any repair work on your own.*

➔ *Contact SAMSON's After-sales Service for repair work.*

12.1 Servicing explosion-protected devices

If a part of the device on which the explosion protection is based needs to be serviced, the device must not be put back into operation until a qualified inspector has assessed it according to explosion protection requirements, has issued an inspection certificate, or given the device a mark of conformity. Inspection by a qualified inspector is not required if the manufacturer performed a routine test on the device before putting it back into operation. Document the passing of the routine test by attaching a mark of conformity to the device.

Replace explosion-protected components only with original, routine-tested components by the manufacturer.

Devices that have already been used outside hazardous areas and are intended for future use inside hazardous areas must comply with the safety requirements placed on serviced devices. Before being operated inside hazardous areas, test the devices according to the specifications for servicing explosion-protected devices.

Observe EN 600079-17 during servicing.

12.2 Returning devices to SAMSON

Defective devices can be returned to SAMSON for repair.

Proceed as follows to return devices to SAMSON:

1. Put the positioner out of operation (see the 'Decommissioning' chapter).
2. Remove the positioner (see the 'Removal' chapter).
3. Proceed as described on the Returning goods page of our website ▶ www.samsongroup.com > Service > After-sales Service > Returning goods

13 Disposal



We are registered with the German national register for waste electric equipment (stiftung ear) as a producer of electrical and electronic equipment, WEEE reg. no.: DE 62194439

➔ Observe local, national and international refuse regulations.

➔ Do not dispose of components, lubricants and hazardous substances together with your other household waste.

Tip

On request, we can appoint a service provider to dismantle and recycle the product.

14 Certificates

The EU declarations of conformity are included on the next pages:

- EU declaration of conformity for Type 3767
- EU declaration of conformity for Type 3767-1
- EU declaration of conformity for Type 3767-8
- ATEX: EC type examination certificate for Type 3767-1
- ATEX: Statement of conformity for Type 3767-8

SMART IN FLOW CONTROL.

SAMSON

EU Konformitätserklärung / EU Declaration of Conformity / Déclaration UE de conformité

Die alleinige Verantwortung für die Ausstellung dieser Konformitätserklärung trägt der Hersteller/
This declaration of conformity is issued under the sole responsibility of the manufacturer/
La présente déclaration de conformité est établie sous la seule responsabilité du fabricant.

Für das folgende Produkt / For the following product / Nous certifions que le produit

Elektropneumatischer Stellungsregler / Electropneumatic Positioner / Positionneur électropneumatique
Typ/Type/Type 3767

wird die Konformität mit den einschlägigen Harmonisierungsrechtsvorschriften der Union bestätigt / the conformity with the relevant Union harmonisation legislation is declared with/ est conforme à la législation d'harmonisation de l'Union applicable selon les normes:

EMC 2014/30/EU	EN 61000-6-2:2005, EN 61000-6-3:2007 +A1:2011, EN 61326-1:2013
RoHS 2011/65/EU	EN 50581:2012

Hersteller / Manufacturer / Fabricant:

SAMSON AKTIENGESELLSCHAFT
Weismüllerstraße 3
D-60314 Frankfurt am Main
Deutschland/Germany/Allemagne

Frankfurt / Francfort, 2017-07-29

Im Namen des Herstellers/ On behalf of the Manufacturer/ Au nom du fabricant.

i v. H. Zager

Hanno Zager
Leiter Qualitätssicherung/Head of Quality Managment/
Responsable de l'assurance de la qualité

i.V. Dirk Hoffmann

Dirk Hoffmann
Zentralabteilungsleiter/Head of Department/Chef du département
Entwicklungsorganisation/Development Organization

ce_3767-0_de_en_fru_rev07.pdf

SAMSON AKTIENGESELLSCHAFT
Weismüllerstraße 3 60314 Frankfurt am Main
Telefon: 069 4009-0 · Telefax: 069 4009-1507
E-Mail: samson@samson.de
Revison 07

SMART IN FLOW CONTROL

SAMSON

EU Konformitätserklärung / EU Declaration of Conformity / Déclaration UE de conformité

Die alleinige Verantwortung für die Ausstellung dieser Konformitätserklärung trägt der Hersteller/
This declaration of conformity is issued under the sole responsibility of the manufacturer/
La présente déclaration de conformité est établie sous la seule responsabilité du fabricant.

Für das folgende Produkt / For the following product / Nous certifions que le produit

Elektropneumatischer Stellungsregler / Electropneumatic Positioner / Positionneur électropneumatique
Typ / Type / Type 3767-1...

entsprechend der EU-Baumusterprüfbescheingung PTB 01 ATEX 2167 ausgestellt von der/
according to the EU Type Examination PTB 01 ATEX 2167 issued by/
établi selon le certificat CE d'essais sur échantillons PTB 01 ATEX 2167 émis par:

Physikalisch Technische Bundesanstalt
Bundesallee 100
D-38116 Braunschweig
Benannte Stelle/Notified Body/Organisme notifié 0102

wird die Konformität mit den einschlägigen Harmonisierungsrechtsvorschriften der Union bestätigt /
the conformity with the relevant Union harmonisation legislation is declared with/
est conforme à la législation d'harmonisation de l'Union applicable selon les normes:

EMC 2014/30/EU	EN 61000-6-2:2005, EN 61000-6-3:2007 +A1:2011, EN 61326-1:2013
Explosion Protection 94/9/EC (bis/to 2016-04-19) Explosion Protection 2014/34/EU (ab/from 2016-04-20)	EN 60079-0:2009, EN 60079-11:2012
RoHS 2011/65/EU	EN 50581:2012

Hersteller / Manufacturer / Fabricant:

SAMSON AKTIENGESELLSCHAFT
Weismüllerstraße 3
D-60314 Frankfurt am Main
Deutschland/Germany/Allemagne

Frankfurt / Francfort, 2017-07-29

Im Namen des Herstellers/ On behalf of the Manufacturer/ Au nom du fabricant.

i v. H. Zager

Hanno Zager
Leiter Qualitätssicherung/Head of Quality Managment/
Responsable de l'assurance de la qualité

i.V. Dirk Hoffmann

Dirk Hoffmann
Zentralabteilungsleiter/Head of Department/Chef du département
Entwicklungsorganisation/Development Organization

ce_3767-1_de,en,fro_rev07.pdf

SAMSON AKTIENGESELLSCHAFT
Weismüllerstraße 3 60314 Frankfurt am Main
Telefon: 069 4009-0 · Telefax: 069 4009-1507
E-Mail: samson@samson.de
Revison 07

SMART IN FLOW CONTROL.

SAMSON

EU Konformitätserklärung / EU Declaration of Conformity / Déclaration UE de conformité

Die alleinige Verantwortung für die Ausstellung dieser Konformitätserklärung trägt der Hersteller/
This declaration of conformity is issued under the sole responsibility of the manufacturer/
La présente déclaration de conformité est établie sous la seule responsabilité du fabricant.

Für das folgende Produkt / For the following product / Nous certifions que le produit

Elektropneumatischer Stellungsregler / Electropneumatic Positioner / Positionneur électropneumatique
Typ / Type / Type 3767-8...

entsprechend der EU-Baumusterprüfbescheingung PTB 01 ATEX 2170 X ausgestellt von der/
according to the EU Type Examination PTB 01 ATEX 2170 X issued by/
établi selon le certificat CE d'essais sur échantillons PTB 01 ATEX 2170 X émis par:

Physikalisch Technische Bundesanstalt
Bundesallee 100
D-38116 Braunschweig
Benannte Stelle/Notified Body/Organisme notifié 0102

wird die Konformität mit den einschlägigen Harmonisierungsrechtsvorschriften der Union bestätigt /
the conformity with the relevant Union harmonisation legislation is declared with/
est conforme à la législation d'harmonisation de l'Union applicable selon les normes:

EMC 2014/30/EU	EN 61000-6-2:2005, EN 61000-6-3:2007 +A1:2011, EN 61326-1:2013
Explosion Protection 94/9/EC (bis/to 2016-04-19) Explosion Protection 2014/34/EU (ab/from 2016-04-20)	EN 60079-0:2009, EN 60079-15:2010
RoHS 2011/65/EU	EN 50581:2012

Hersteller / Manufacturer / Fabricant:

SAMSON AKTIENGESELLSCHAFT
Weismüllerstraße 3
D-60314 Frankfurt am Main
Deutschland/Germany/Allemagne

Frankfurt / Francfort, 2017-07-29

Im Namen des Herstellers/ On behalf of the Manufacturer/ Au nom du fabricant.

i.V. H. Zager

Hanno Zager
Leiter Qualitätssicherung/Head of Quality Managment/
Responsable de l'assurance de la qualité

i.V. Dirk Hoffmann

Dirk Hoffmann
Zentralabteilungsleiter/Head of Department/Chef du département
Entwicklungsorganisation/Development Organization

ce_3767-8_de,en,fru_rev07.pdf

SAMSON AKTIENGESELLSCHAFT
Weismüllerstraße 3 60314 Frankfurt am Main
Telefon: 069 4009-0 · Telefax: 069 4009-1507
E-Mail: samson@samson.de
Revison 07

Physikalisch-Technische Bundesanstalt
Braunschweig und Berlin

PTB

TRANSLATION

(1) **EC TYPE EXAMINATION CERTIFICATE**

(2) Equipment and Protective
Atmospheres –

(3) EC Type Examin

(4) Equipment:

(5) Manufacture

(6) Address:

(7) The equipme
schedule to

(8) The Physikalis
Article 9 of
equ
requi
systems
to the D

(9) The essen

(10) If the sign "X"
equipment is
to this certific

(11) According to t
only to the de
further requir
equipment.

Physikalisch-Technische Bundesanstalt
Braunschweig und Berlin

PTB

(12) The marking of the equipment shall include the following:



II 2 G EEx ia IIC T6

[redacted]

Zertifizierungs
By order

(Signature)

Dr. Ing. U
Regierungs

Physikalisch-Technische Bundesanstalt
Braunschweig und Berlin

(13) **S c h e d u l e**

(14) **EC TYPE EXAMINATION CERTIFICATI**

(15) **Description of Equipment**

The model 3767-1.. Posi
valves and serve
device into a pn
power non-com

i/p-converter, in
passive two-ter
intrinsically saf
are not exce

The device is

The correlati
temperature
below.

Electrical da

Model 3767-

i/p converter
(teminals 11/

Maximum va

Physikalisch-Technische Bundesanstalt
Braunschweig und Berlin

Models 3767 – 11./..- 12. with inductive Limit Switc

Inductive limit switch
(terminals 41/42 and 51/52

Type of Pr
EEx ia IIC

Maximum value

For positione
classification
circuit curren

Physikalisch-Tech
Braunschweig und

Model 3767

Signal Circ
(termina

Maximu

Model 376

Signal Circ
(terminals 8

The correla
temperatur

Versi
Temperatu
Charac **linear c**

C negli

The permis
The maxim
in the table

U
I
P

C negli

(16) **Test repo**

Physikalisch-Technische Bundesanstalt
Braunschweig und Berlin

PTB

(17) **Special conditions for safe use**

None

(18) **Special health and safety requirements**

In compliance with the standards

Zertifizierungsstelle Ex
By order

(Signature)

Dr. Ing. U. Johannsm
Regierungsdirekto

Physikalisch-Technische Bundesanstalt
Braunschweig und Berlin

PTB

TRANSLATION

(1) # Statement of conformity

(2) Equipment and Protective Systems Intended for Use in Potentially Explosive Atmospheres – **Directive 94/9/EC**

(3) EC Type Examination Certificate Number

PTB 01 ATEX 2170 X

(4) Equipment: Model 3767-8 Positioner

(5) Manufacturer: Samson AG

(6) Address: Weismüllerstr. 3, D-60314 Frankfurt, Germany

(7) This equipment and any acceptable variation therefore are specified in the schedule to this certificate and the documents referred to therein.

(8) The Physikalisch-Technische Bundesanstalt, notified body number 0102 in according to Article 9 of the Council Directive 94/9/EC of 23 March 1994, certifies that this equipment has been found to comply with the Essential Health and Safety Requirements relating to the design and construction of equipment and protective systems intended for use in potentially explosive atmospheres given in Annex II to the Directive.

The examination and test results are recorded in confidential report **PTB Ex 01-21201**.

(9) The Essential Health and Safety Requirements are satisfied by compliance with

EN 50021: 1999

(10) If the sign "X" is placed after the certificate number, it indicates that the equipment is subject to special conditions for safe use specified in the schedule to this certificate.

(11) In compliance with the Directive 94/9/EC this Statement of Conformity relates only to the design and construction of the equipment specified. Further requirements of this Directive apply to manufacture and marketing of this equipment.

Statement of Conformity without signature and seal are invalid.
This Statement of Conformity may only be reproduced in its entirety and without any changes, schedule included.
Extracts or changes shall require the prior approval of the Physikalisch-Technische Bundesanstalt.

Physikalisch-Technische Bundesanstalt., Bundesallee 100, D-38116 Braunschweig

Ptb16-Ex n.doc

Physikalisch-Technische Bundesanstalt
Braunschweig und Berlin

(12) The marking of the equipment shall include the following:



Zertifizierungsstelle Explosionsschutz
By order

Braunschweig,.2002-03-07

(Signature) (Seal)

Dr. Ing. U. Johannsmeyer
Regierungsdirektor

Statement of Conformity without signature and seal are invalid.
This Statement of Conformity may only be reproduced in its entirety and without any changes, schedule included.
Extracts or changes shall require the prior approval of the Physikalisch-Technische Bundesanstalt.

Physikalisch-Technische Bundesanstalt., Bundesallee 100, D-38116 Braunschweig

Ptb16-Ex n.doc

Physikalisch-Technische Bundesanstalt
Braunschweig und Berlin

(13) # Schedule

(14) ## Statement of Conformity PTB 01 ATEX 2170 X

(15) **Description of Equipment**

The Model 3767-8... Positioner is intended for attachment to pneumatic control valves and serves for converting control signals of (0)4 . . .20mA from a control devices into a pneumatic signal pressure of 6bar max. For pneumatic auxiliary power non-combustible media are used. The inductive limit switches, position indicators and solenoid valves are passive two networks.

The device is intended for use inside and outside of hazardous areas...

The correlation between temperature classification and permissible ambient temperature ranges is shown in the table below:

Temperature class	Permissible ambient temperature range	Maximum short-circuit current
T6	60°C	85mA or
T5	-45°C ≤ Ta ≤ 70°C	100mA or
T4	80°C	120mA

Electrical data

Model 3767-8 . . .

Signal circuit (i/p-Converter) (terminals 11/12) — Type of protection: EEx nA II

Inductive limit switch (terminals 41/42 and 51/52) — Type of protection EEx nA II

Model 3767-86 with Position Indicator

Signal circuit (terminals 31/32) — Type of protection EEx nA II

The correlation between version and temperature classification is shown in the table below:

Version U_N		6V	12 V	24 V
Temperature class	T6	60°C		
	T5	-45°C ≤ Ta ≤ 70°C		
	T4	80°C		

Statement of Conformity without signature and seal are invalid.
This Statement of Conformity may only be reproduced in its entirety and without any changes, schedule included.
Extracts or changes shall require the prior approval of the Physikalisch-Technische Bundesanstalt.

Physikalisch-Technische Bundesanstalt
Braunschweig und Berlin

(16) Test report: **PTB Ex 01-21201**

Schedule of the Statement of Conformity PTB 01 ATEX 2170 X

(17) **Special conditions for safe use**

The Model 3767-8 . . . Positioner shall be installed in an enclosure providing at least Degree of Protection IP 54 in compliance with the IEC Publication 60529:1989.
This requirement applies also to the cable entries and/or plug connectors.

The wiring shall be connected in such a manner that the connection facilities are not subjected to pull and twisting.

The signal circuit (terminals 11/12 i/p-converter) and the signal circuit (terminals 31/32 position indicator) shall be provided with a series-connected fuse outside of the hazardous area.
This fuse shall comply with IEC 127-2/II, 250V F, or with IEC 127-2/VI, 250V T, with a fuse nominal current I_N of $\leq$ 50mA max.

(18) **Basic health and safety requirements**

Are satisfied by compliance with the standard specified.

Zertifizierungsstelle Explosionsschutz
By order

Braunschweig, 07 März 2002

(Signature) (seal)

Dr. Ing. U. Johannsmeyer

Statement of Conformity without signature and seal are invalid.
This Statement of Conformity may only be reproduced in its entirety and without any changes, schedule included.
Extracts or changes shall require the prior approval of the Physikalisch-Technische Bundesanstalt.

Physikalisch-Technische Bundesanstalt
Braunschweig und Berlin

ADDENDUM No. 1

to the Statement of Conformity PTB 01 ATEX 2170 X

Equipment: Model 3767-8.. Positioner

Marking: Ex II 3 G EEx nA II T6

Manufacturer: SAMSON AG

Address: Weismüllerstr. 3, D-60314 Frankfurt, Germany

Description of the additions and modifications

The coverage of the existing Statement of Conformity is supplemented by the electrical data of the model series 3767-8.2, -8.3, - 8.4 with solenoid valve module. The design of the equipment was not changed.

Electrical data

Model 3767-8.. Signal circuit (terminals 11/12)	Type of protection EEx nA II
Inductive proximity switch (terminals 41/42 and 51/52)	Type of protection EEx nA II
Model 3767-86. with Position Indicator Signal circuit (terminals 31/32)	Type of protection EEx nA II
Models 3767-8.2, -8.3, -8.4 with Solenoid Valve Signal circuit, nominal signal (terminals 81/82)	Type of protection EEx nA II

Statements of Conformity without signature and seal are invalid. This Statement of Conformity may be reproduced only without changes. The results laid down in this test report refer exclusively to the test object and the technical documentation submitted. Extracts or changes will require the approval of the Physikalisch-Technische Bundesanstalt.

Physikalisch-Technische Bundesanstalt
Braunschweig und Berlin

Addendum No. 1 to the Statement of Conformity PTB 00 ATEX 2170 X

The correlation between equipment version and temperature classification is shown in the table below:

Version	UN	6V	12V	24V
Temperature class	T6	60°C		
	T5	-45°C ≤ Ta ≤ 70°C		
	T4	80°C		

All the other data apply unchanged also to this Addendum No. 1.

Test report: PTB EX 03-23230

Zertifizierungsstelle Explosionsschutz
By order

Braunschweig, 28. May 2003

(Signature) (Seal)

Dr. Ing. U. Johannsmeyer
Regierungsdirektor

Statements of Conformity without signature and seal are invalid. This Statement of Conformity may be reproduced only without changes. The results laid down in this test report refer exclusively to the test object and the technical documentation submitted. Extracts or changes will require the approval of the Physikalisch-Technische Bundesanstalt.

Installation Manual for apparatus certified by CSA for use in hazardous locations.

Electrical rating of intrinsically safe apparatus and apparatus for installation in hazardous locations.

Table 1: Maximum values

	i/p-circuit	Position-indicator	Limit switches (inductive)	Solenoid valve
Circuit No.	1	2	3 and 4	5
Terminal No.	11 / 12	31 / 32	41 / 42 and 51 / 52	81 / 82
U_i or V_{max}	28V	28V	16V	28V
I_i or I_{max}	115mA	115mA	25/52 mA	115mA
P_i or P_{max}	0,7W	1W	64/169mW	250mW (##)
C_i	0nF	5.3nF	30nF	0nF
L_i	0µH	0µH	100µH	0µH

Notes: Entity parameters must meet the following requirements:
(##) Solenoid valve 12V and 24V version P_i or P_{max} no limited

U_o or $V_{oc} \leq U_i$ or V_{max} / I_o or $I_{oc} \leq I_i$ or I_{max} / $P_o \leq P_i$ or P_{max}; $C_a \geq C_i$ and $L_a \geq L_i$

Table 2: CSA– certified barrier parameters of circuit 1, 2 and 5

Barrier	Supply barrier		Evaluation barrier	
	V_{max}	R_{min}	V_{max}	
circuit 1	≤ 28V	≥ 280Ω	≤ 28V	Diode Return
circuit 2	≤ 28V	≥ 280Ω	≤ 28V	Diode Return
circuit 5 (#)	≤ 28V	≥ 280Ω	≤ 28V	Diode Return
circuit 5 (##)	≤ 28V	≥ 280Ω	≤ 28V	Diode Return

circuit 5: (#) = 12V and 24V version; (##) = 6V version.

Table 3: The correlation between temperature classification and permissible ambient temperature ranges is shown in the table below**:**

Temperature class	Permissble ambient temperature range
T6	- 45°C ... 60°C
T5	- 45°C ... 70°C
T4	- 45°C ... 80°C

Table 4: For the Model 3767 – 3 Positioner the correlation between temperature classification, permissible ambient temperature ranges and maximum short- circuit current is shown in the table below:

Temperature class	Permissible ambient temperature range	Maximum short-circuit current
T6	- 45°C ... 45°C	52mA
T5	- 45°C ... 60°C	
T4	- 45°C ... 75°C	
T6	- 45°C ... 60°C	25mA
T5	- 45°C ... 80°C	
T4	- 45°C ... 80°C	

Intrinsically safe if installed as specified in manufacturer's installation manual.

CSA- certified for hazardous locations

Ex ia IIC T6; Class I, Zone 0 **Type 4 Enclosure**
Class I; Groups A, B, C, D
Class II; Groups E, F + G; Class III

Notes:

1.) Max. two cable entries per positioner

2.) Each pair of I.S. wires must be protected by a shield that is grounded at the I.S. Ground. The shield shall extend as close to the terminal as possible.

3.) The installation shall be in accordance with the Canadian Electrical Code Part 1.

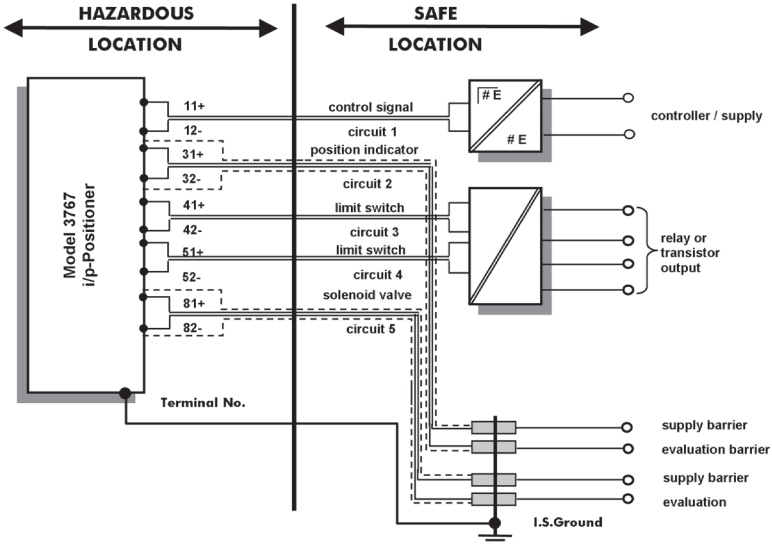

Version: Model 3767-3 with i/p-converter, solenoid valve and inductive limit switches.
Model 3767-36 with i/p-converter and position indicator.

Circuit 1:Controller CSA- certified or CSA– certified barriers

Relay or transistor output 3 or 4 channel(s) resp. CSA certified.

Supply and evaluation barrier CSA- certified

Position indicator channel 2 only version 3767-36

For the permissible maximum values for the intrinsically safe circuits see Table 1
For the permissible barrier parameters for the circuits 2 and 5 see Table 2

Cable entry M 20 x 1.5 or metal conduit according to drawing No. 1050 – 0539 T
or 1050 – 0540 T

On interconnection to form ground- free signal circuits, only evaluation barriers shall be installed in the return line. Correct polarity shall be ensured.

CSA- certified for hazardous locations

Class I; Div. 2, Groups A, B, C, D **Type 4 Enclosure**
Class II, Div. 2, Groups, E, F + G, Class III

I/P - Positioner with position indicator, solenoid valve and limit switches.

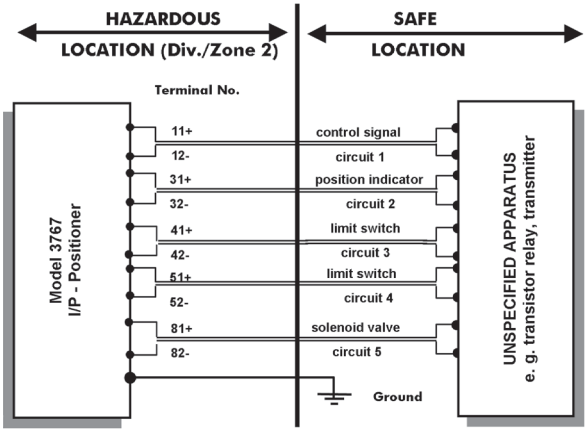

1.) The installation shall be in accordance with the Canadian Electrical Code Part 1.

2.) For the maximum values for the individual circuits see Table 1 and 2.

3.) The cables shall be protected by conduits.

4.) Cable entry only rigid metal conduit according to drawing
No. 1050-0539 T and 1050-0540 T

Installation drawing Control Relay KHA5–OTI/Ex2, KHA6–OTI/Ex1 or KHA6–OTI/Ex2 with Model SJ-b-N Proximity Sensors

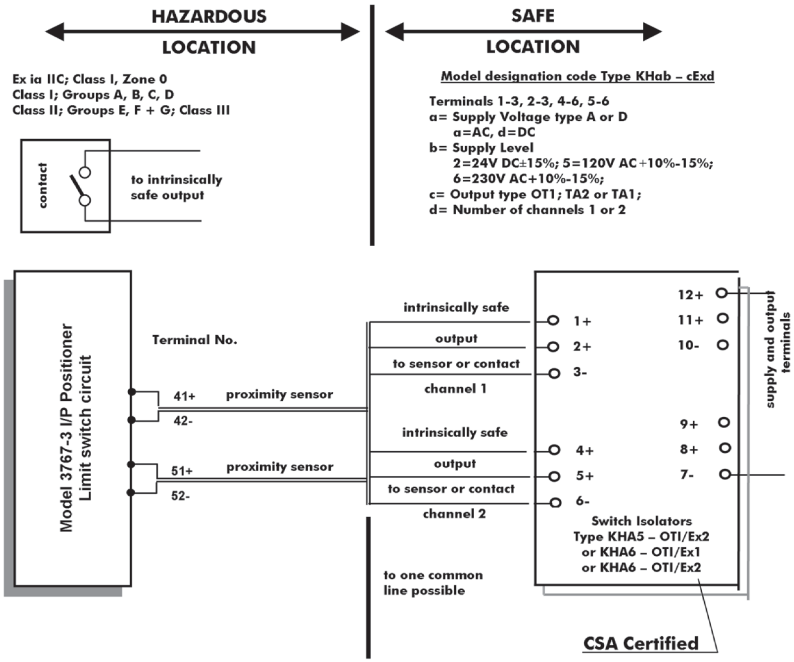

The total series inductance and shunt capacitance of shield wiring shall be restricted to the following maximum values

maximum capacitance of each inductive sensor 30nF
maximum inductance of each inductive sensor 100µH

System parameters

Control Relay Terminal No.	Groups	L [mH]	C [µF]	V_{OC} [V]	I_{SC} [mA]	V_{max} [V]	R_{min} [Ω]
1-3; 2-3 4-6; 5-6	A + B	84.88	1.273	↑ 12.6 ↓	↑ 19.8 ↓	↑ 12.6 ↓	↑ 650 ↓
	C + D	298.7	3.82				
	E, F, G	744.4	10.18				

Division 2 wiring method shall be in accordance to the Canadian Electrical Code Part 1.

Revisions Control Number: 1 May 2005

Addendum to EB 8355-2 EN

Electrical rating of intrinsically safe apparatus and apparatus for installation in hazardous locations.

Table 1: Maximum values

	i/p-circuit	Position-indicator	Limit switches inductive	Solenoid valve
Circuit No.	1	2	3 and 4	5
Terminal No.	11 / 12	31 / 32	41 / 42 and 51 / 52	81 / 82
U_i or V_{max}	28V	28V	16V	28V
I_i or I_{max}	115mA	115mA	25/52 mA	115mA
P_i or P_{max}	0,7W	1W	64/169mW	250mW (##)
C_i	0nF	5.3nF	30nF	0nF
L_i	0µH	0µH	100µH	0µH

Notes: Entity parameters must meet the following requirements:
(##) Solenoid valve 12V and 24V version P_i or P_{max} no limited
(##) Solenoid valve 6V version P_i or P_{max} 250mW

U_o or V_{OC} or $V_t \leq U_i$ or V_{max} / I_o or I_{OC} or $I_t \leq I_i$ or I_{max} / P_o or $P_{max} \leq P_i$ or P_{max}
$C_a \geq C_i + C_{cable}$ and $L_a \geq L_i + L_{cable}$

Table 2: FM/CSA – approved barrier parameters of circuit 2 and 5

Barrier	Supply barrier				Evaluation barrier		
	V_{OC}	R_{min}	I_{OC}	P_{max}	V_{OC}	R_{min}	I_{SC}
circuit 1	≤ 28V	≥ 280Ω	≤ 115mA	≤ 0,7W	≤ 28V	#	0mA
circuit 2	≤ 28V	≥ 196Ω	≤ 115mA	≤ 1W	≤ 28V	#	0mA
circuit 5 (#)	≤ 28V	≥ 200Ω	≤ 115mA	(#)	≤ 28V	#	0mA
circuit 5 (##)	≤ 28V	≥ 785Ω	≤ 115mA	(##)	≤ 28V	#	0mA

circuit 5: (#) = 12V and 24V version; (##) = 6V version.

Table 3: The correlation between temperature classification and permissible ambient temperature ranges is shown in the table below:

Temperature class	Permissble ambient temperature range
T6	60°C
T5	- 40°C ≤ ta ≤ 70°C
T4	80°C

Table 4: For the Model 3767 – 3 Positioner the correlation between temperature classification, permissible ambient temperature ranges and maximum short- circuit current is shown in the table below:

Temperature class	Permissible ambient temperature range	Maximum short-circuit current
T6	45°C	52mA
T5	- 40°C ≤ ta ≤ 60°C	
T4	75°C	
T6	60°C	25mA
T5	- 40°C ≤ ta ≤ 80°C	
T4	80°C	

FM- approved for hazardous locations

Class I, Zone 0 AEx ia IIC T6 **NEMA Type 4X**
Class I, II, III Division 1, Groups A, B, C, D; E, F + G

Notes:

1.) The apparatus may be installed in intrinsically safe circuits only when used in conjunction with the FM approved apparatus. For maximum values of U_i or V_{max} ; I_i or I_{max}; P_i or P_{max} ; C_i and L_i of the various apparatus see Table 1.

2.) The apparatus may be installed in intrinsically safe circuits only when used in conjunction with the FM approved intrinsically safe barrier.
For barrier selection see Table 2.

3.) Installation must be in accordance with the National Electrical Code ANSI/NFPA 70 and ANSI/ISA RP 12.06.01

4.) Use only supply wires suitable for 5°C above surrounding temperature.

Revisions Control Number: 1 August 2004 **Addendum to EB 8355-2 EN**

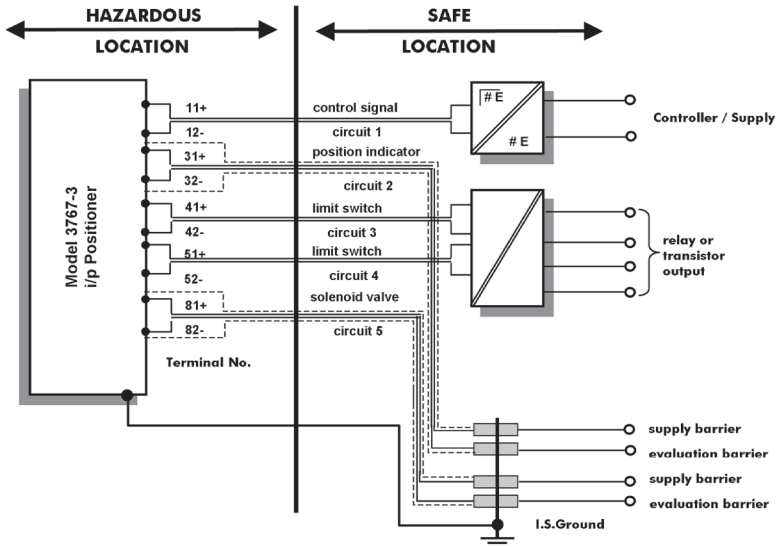

Version: Model 3767-3 with i/p-converter, solenoid valve and inductive limit switch(es).
Model 3767-36 with i/p-converter and position indicator.

Circuit 1:Controller FM/CSA- approved or FM/CSA – approved barriers

Relay or transistor output 3 or 4 channel(s) resp. FM/CSA approved.
Supply and evaluation barrier FM/CSA- approved.
Position indicator channel 2 only version 3767-36

For the permissible maximum values for the intrinsically safe circuits see Table 1
For the permissible barrier parameters for the circuits 2 and 5 see Table 2

Cable entry M 20 x 1.5 or metal conduit according to drawing No. 1050 – 0539 T
or 1050 – 0540 T

FM- approved for hazardous locations

Class I, Division 2, Groups A, B, C, D
Class II Division 2, Groups F + G; Class III

NEMA Type 4X

i/p - positioner with position indicator, solenoid valve and limit switches.

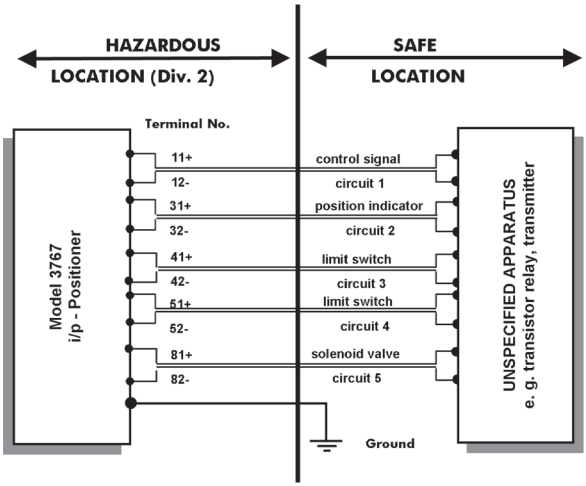

Notes:

1.) The installation must be in accordance with the National Electrical Code ANSI/NFPA 70

2.) For the maximum values for the individual circuits see Table 1 and 2.

3.) The cables shall be protected by conduits.

4.) Cable entry only rigid metal conduit according to drawing No. 1050-0539 T and 1050-0540 T

Installation drawing Control Relay KHab-cEx de with Model SJ-b-N Proximity Sensors

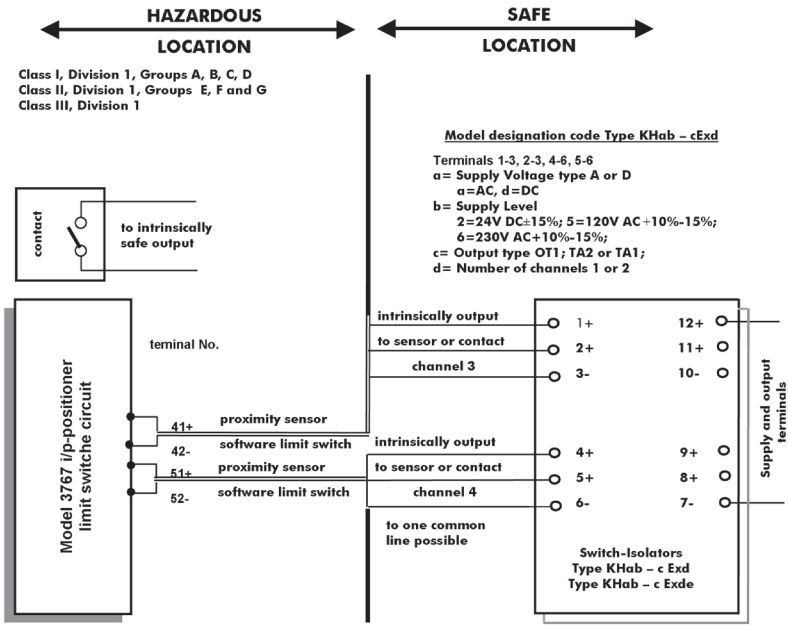

maximum capacitance of each inductive sensor 30nF
maximum inductance of each inductive sensor 100µH

The total series inductance and shunt capacitance of shield wiring shall be restricted to the following maximum values

Control Relay Terminal No.	Groups	L [mH]	C [µF]	V_{OC} [V]	I_{SC} [mA]
1-3; 2-3 4-6; 5-6	A + B	84,8	1,27	12,9	19,8
	C + E	299	3,82		
	D, F, G	744	10,2		

Model designation code Type KHab – cExde

a= Supply Voltage type A or D
a=AC, d=DC
b= Supply Level
2=24V DC±15%; 5=120V AC+10%-15%;
6=230V AC+10%-15%;
c= Output type RTA/; RW1/; SS1/; SS2/; RS1/; SR/; ST-or SOT
d= Number of channels 1 or 2
e= Power rail designation, P, 2S.P or GS.P (includes Model KHD2-EB-PB Power Feed Module) or Blank

15 Appendix

15.1 Accessories

Table 15-1: *Accessories and mounting kits for direct attachment to Type 3277*

Lever			**Mounting kit**
Actuator size	Lever with associated clamp and intermediate plate		Order no.
120 cm²	D1 lever with stopper for output (38)	Standard version	1400-7116
		Version compatible with paint	1402-0944
175 to 750 cm²	D1 lever (33 mm long with 17 mm clamp)	Standard version	1400-6370
		Version compatible with paint	1402-0942
355 to 750 cm²	D2 lever (44 mm long with 13 mm clamp)	Standard version	1400-6371
		Version compatible with paint	1402-0943

Switchover plates and connecting plates		Order no.
Switchover plate (for 120 cm² actuator)	Type 3277-5xxxxxx**.00** Actuator (old)	1400-6819
New switchover plate	Type 3277-5xxxxxx**.01** Actuator (new) or higher	1400-6822
Connecting plate for additional attachment of, e.g. a solenoid valve	Type 3277-5xxxxxx**.00** Actuator (old), G ⅛ Type 3277-5xxxxxx**.00** Actuator (old), ⅛ NPT	1400-6820 1400-6821
New connecting plate	Type 3277-5xxxxxx**.01** Actuator (new) or higher G ⅛ and ⅛ NPT	1400-6823
Note: *Only new switchover and connecting plates can be used with new actuators (Index **01**). Old and new plates are not interchangeable.*		
Required connection block for 240, 350, 355 and 700 cm² actuator (including gaskets and fastening screw)	G ¼	1400-8819
	¼ NPT	1402-0901

Pipe connection	Material	Actuator size [cm²]	Order no.
Required pipe connection including screw fitting	Steel	240	1400-6444
	Stainless steel	240	1400-6445
For actuator with "actuator stem retracts" or with air purging of the top diaphragm chamber	Steel	350	1400-6446
	Stainless steel	350	1400-6447
	Steel	355/700	1400-6448
	Stainless steel	355/700	1400-6449

Range spring	Travel [mm]	Actuator size [cm²]	Order no.
2 (4.5 coils)	7.5	120 to 240	1400-6443
1 (9.5 coils, installed as standard)	10 to 15	120 to 350	1400-6442
2	15	355 to 750	1400-6443
1	30	355 to 750	1400-6442

Accessories		Order no.
Pressure gauge mounting block (only for 120 cm²)	G ¼	1400-7458
	¼ NPT	1400-7459
Pressure gauge mounting kit for supply pressure and signal pressure	Stainless steel/brass	1402-1637
	Stainless steel/stainless steel	1402-1638
Filter check valve, replaces vent plug and increases the degree of protection to IP65		
Filter check valve integrated into a screw-on body with G ¼ thread	Polyamide, IP65 degree of protection	1790-7408
	1.4301, IP65 degree of protection	1790-7253
	Polyamide, NEMA 4 degree of protection	1790-9645
	1.4301, NEMA 4 degree of protection	1790-9646
Assortment of spare parts including gaskets and diaphragms		1400-9895

Table 15-2: *Accessories and mounting kits for attachment according to IEC 60534-6*

Mounting kits	Control valve		Travel [mm]	With lever	Order no.
NAMUR mounting kit, see Fig. 5-6 for parts	Valve with cast yoke		7.5 to 60	N1 (125 mm)	1400-6787
			22.5 to 120	N2 (212 mm)	1400-6789
	Rod diameter [mm] of rod-type yoke	20 to 25		N1	1400-6436
		20 to 25		N2	1400-6437
		25 to 30		N1	1400-6438
		25 to 30		N2	1400-6439
		30 to 35		N1	1400-6440
		30 to 35		N2	1400-6441
Attachment to Fisher and Masoneilan linear actuators (one of each mounting kits is required per actuator)					1400-6771 and 1400-6787
Additional range spring acc. to	Range spring 1 (9.5 coils, installed as standard) Range spring 2 (4.5 coils)				1400-6442 1400-6443
Accessories					Order no.
Pressure gauge mounting block			G ¼		1400-7458
			¼ NPT		1400-7459
Pressure gauge kit			Stainless steel/brass		1402-1637
			Stainless steel/stainless steel		1402-1638

Filter check valve, replaces vent plug and increases the degree of protection to IP65		
Filter check valve integrated into a screw-on body with G ¼ thread	Polyamide, IP65 degree of protection	1790-7408
	1.4301, IP65 degree of protection	1790-7253
	Polyamide, NEMA 4 degree of protection	1790-9645
	1.4301, NEMA 4 degree of protection	1790-9646
Assortment of spare parts including gaskets and diaphragms		1400-9895

Table 15-3: *Accessories and mounting kits for attachment to rotary actuators*

Complete mounting parts, including range spring 2, but not including the cam disk		Order no.
Actuator acc. to VDI/VDE 3845 (September 2010), fixing level 2		1400-8815
SAMSON Type 3278 Actuator VETEC Type S	160 cm²	1400-7103
	320 cm²	1400-7104
VETEC Type R	R 110 to R 250	1400-7117
Attachment Masoneilan	Camflex I, DN 25 to 100	1400-7118
	Camflex I, DN 125 to 250	1400-7119
	Camflex II	1400-7120
Required range spring		Order no.
Standard operation of set point, range spring 2 (4.5 coils)		1400-6443
Split-range operation, range spring 1 (9.5 coils, installed as standard)		1400-6442
Cam disk with accessories		Order no.
~, linear basic characteristic [3] ~, equal percentage basic characteristic [3]	(0050-0072), 0 to 90° opening angle, also for Type 3310	1400-6664
~, linear [1]	(0050-0073), 0 to 90° opening angle	1400-6665
~, equal percentage [2]	(0050-0080), 0 to 70° opening angle, for control butterfly valves	1400-6774
~, linear [1]		
~, equal percentage [2]	(0050-0081), 0 to 70° opening angle, for control butterfly valves	1400-6775
~, linear [1]		
~, equal percentage [2]	(0050-0074, VETEC), 0 to 75° opening angle	1400-6666
	(0050-0075, VETEC), 0 to 75° opening angle	1400-6667
	(0059-0007, Camflex) to be set between 0 and 55°	1400-6637
	(0059-0008, Camflex) to be set between 0 and 55°	1400-6638
Accessories		
See list on page 15-2		

[1] Linearizes the flow characteristic
[2] Creates an equal percentage flow characteristic
[3] Based on opening angle

Table 15-4: *Accessories for electrical connection*

Device index 3767-x...x.**03** and lower**:**

Cable gland PG 13.5	
Version	**Order no.**
Black plastic	1400-6781
Blue plastic	1400-6782
Nickel-plated brass	1400-6979

Adapter PG 13.5 to ½ NPT	
Version	**Order no.**
Metal	1400-7109
Painted blue	1400-7110

Device index 3767-x...x.**04** and higher**:**

M20x1.5 cable gland		
Version	**Clamping range**	**Order no.**
Black plastic	5.5 to 13 mm	1400-6985
Blue plastic	5.5 to 13 mm	1400-6986
Nickel-plated brass	6 to 12 mm	1890-4875

M20x1.5 to ½ NPT adapter	
Version	**Order no.**
Powder-coated aluminum	0310-2149

15.2 After-sales service

Contact our after-sales service for support concerning service or repair work or when malfunctions or defects arise.

E-mail contact

You can reach our after-sales service at aftersalesservice@samsongroup.com.

Addresses of SAMSON sales sites

The addresses of SAMSON AG and sales sites can be found on our website (www.samsongroup.com).

Required specifications

Please submit the following details:

- Order number and position number in the order
- Type designation, configuration ID, model number, serial number

EB 8355-2 EN

SAMSON AKTIENGESELLSCHAFT
Weismüllerstraße 3 · 60314 Frankfurt am Main, Germany
Phone: +49 69 4009-0 · Fax: +49 69 4009-1507
samson@samsongroup.com · www.samsongroup.com

2025-10-16 · English