BA00425G/08/EN/03.14
71264169

Operating Instruction Promonitor NRF560

Tank Side Monitor

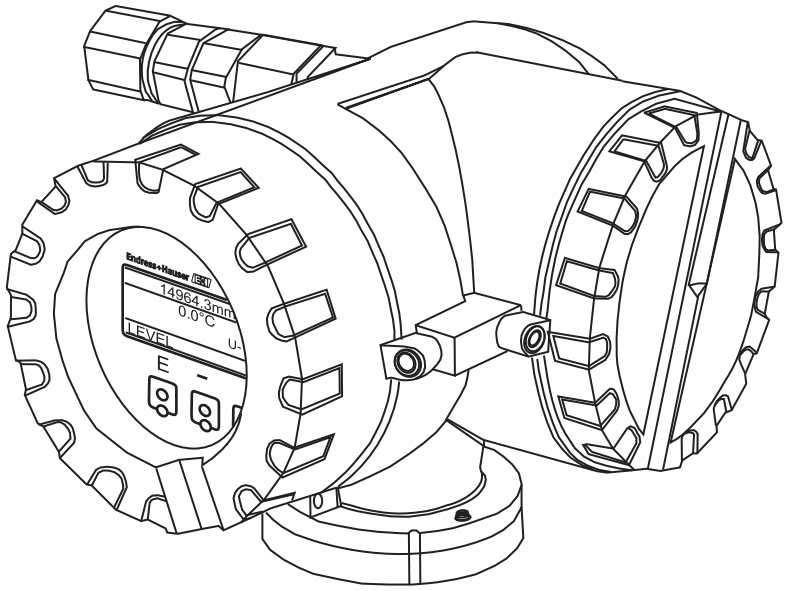

Endress+Hauser
People for Process Automation

Basic Device Layout of Promonitor NRF560

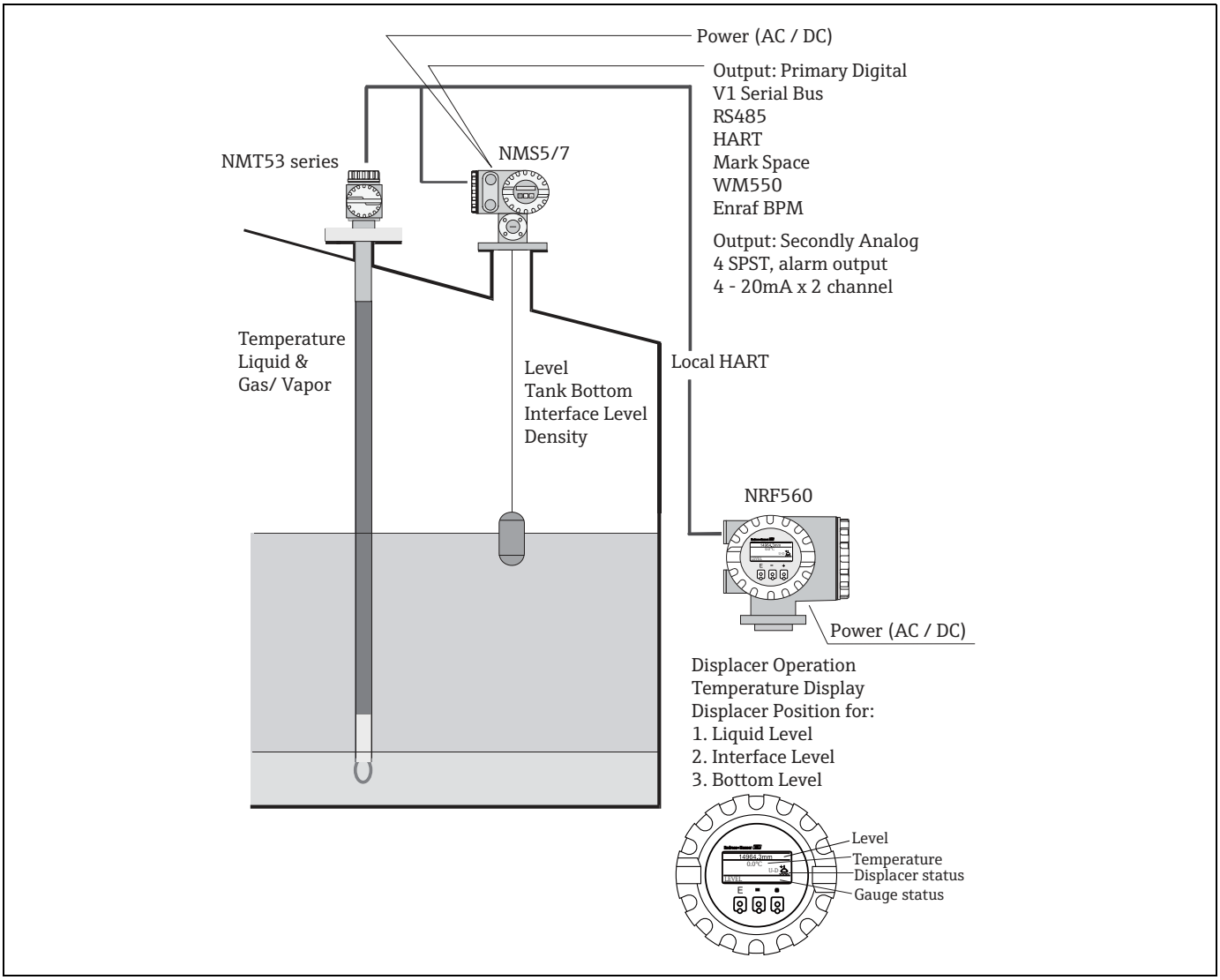

Figure 1: System Layout 1

Promonitor NRF560 is a tank side monitor which displays Proservo NMS5 data at the side of a tank and allows operators to control displacer without climbing on the tank.
NRF560 can be connected to NMS and installed at the side of the tank or in a place away from the tank (1200m)
Local HART communication is used for the connection between NRF560 and NMS.
NRF560 has functions to show interface, tank bottom, liquid levels, and temperature measured by NMS.
NRF560 also has functions to operate displacer for liquid, interface, and tank bottom levels measurement.
For operation of NMS5 via NRF, three touch sensors (E, +, - keys) can be used.

Table of Contents

1 Safety Instructions 4
1.1 Designated Use 4
1.2 Installation, Commissioning, and Operation 4
1.3 Product Requirements 4
1.4 Operational Safety 5
1.5 Notes on Safety Conventions and Symbols 5
1.6 Symbols for Certain Types of Information 5

2 Identification 6
2.1 Device Designation 6
2.2 Order Information 9
2.3 Scope of Delivery 10
2.4 Documentation 10
2.5 Certificates and Approvals 10
2.6 Registered trademarks 10

3 Installation 11
3.1 Incoming Acceptance, Transport, Storage 11
3.2 Installation Condition 12
3.3 Installation 13

4 Wiring 15
4.1 Wiring Connection 15
4.2 Input 16
4.3 Cable Gland 16

5 Operation 17
5.1 Display and Operating Elements 17
5.2 Touch Control Functions 18
5.3 Programming Matrix 19
5.4 Access Code Setting 20
5.5 NMS Matrix Setting 20
5.6 How to Select Access Code 21
5.7 HOME Position 22

6 NRF560 Programming Matrix 24
6.1 Description of Programming Matrix 25

7 NMS5 Programming Matrix 26

8 Maintenance 28
8.1 Exterior Cleaning 28
8.2 O-ring Replacement 28
8.3 Repairs 28
8.4 Repairs to Ex-approved Devices 28

9 Accessories 29

10 Troubleshooting 30
10.1 Spare Parts 31
10.2 Return 32
10.3 Disposal 32
10.4 Software History 32

11 Technical Data 33

1 Safety Instructions

1.1 Designated Use

NRF 560 is a tank side monitor and controls tank gauge NMS5. NRF560 has functions to show interface, tank bottom, liquid levels, and temperature measured by NMS.
NRF560 also has functions to operate displacer for liquid, interface, and tank bottom levels measurement. For operation of NMS5 via NRF, three touch sensors (E, +, - keys) can be used. Local HART communication is used for the connection between NRF560 and NMS.

1.2 Installation, Commissioning, and Operation

- Mounting, electrical installation, start-up, and maintenance of the instrument may only be performed by trained personnel authorized by the operator of the facility.
- Personnel must read and understand these installation instructions before performing the procedures.
- The instrument may only be operated by personnel who are authorized and trained by the operator of the facility. All instructions in this manual must be observed.
- The installer must make sure that the measuring system is correctly wired according to the wiring diagrams. The measuring system must be grounded.
- Observe all law and regulations applicable and valid for your country and pertaining to the opening and repairing of electrical devices.

1.3 Product Requirements

Power Source
Check the voltage of the power supply before connecting it to the product. It should be the exact voltage required for proper operation of the product.

Connection to Other Devices
It is possible to connect to other devices explained in this instruction. Refer to each operation instruction when connecting to devices.

Ground
Do not remove earth terminal or earth wire when the power is on.

Power Cable
Use a power cable specified by our company. The product should be protectively grounded before it is connected to a measurement object or an external control circuit.

1.4 Operational Safety

Hazardous Area

- Use the explosion proof type for measurement in areas where explosion hazards are present.
- Devices installed in areas having explosion hazards must not be opened when the power is on.
- Strict compliance with installation instructions and - ratings, as directed in this supplementary documentation, is mandatory.
- Device maintenance and repair is restricted to meet explosion proof regulations.
- Tighten the cable gland firmly.
- Devices employed in areas having explosion hazards should be installed and wired in keeping with explosion proof regulations.
- Ensure that all personnel are properly qualified.
- Observe the certification requirements as well as national and local regulations.



Changes or modifications other than those expressly approved by Endress+Hauser are strictly prohibited. Unauthorized modifications can cause malfunction or damage, resulting in serious injury or death.

1.5 Notes on Safety Conventions and Symbols

To highlight safety-relevant or alternative operating procedures in this manual, the following conventions have been used, each indicated by a corresponding symbol on the left.

Symbol	Meaning
 A0011189-EN	**DANGER!** This symbol alerts you to a dangerous situation. Failure to avoid this situation will result in serious or fatal injury.
 A0011190-EN	**WARNING!** This symbol alerts you to a dangerous situation. Failure to avoid this situation can result in serious or fatal injury.
 A0011191-EN	**CAUTION!** This symbol alerts you to a dangerous situation. Failure to avoid this situation can result in minor or medium injury.
 A0011192-EN	**NOTICE!** This symbol contains information on procedures and other facts which do not result in personal injury.

1.6 Symbols for Certain Types of Information

Symbol	Meaning
 A0011182	**Allowed** Indicates procedures, processes or actions that are allowed.
 A0011183	**Recommendation** Indicates procedures, processes or actions that are recommended.
 A0011184	**Forbidden** Indicates procedures, processes or actions that are forbidden.
 A0011193	**Tip** Indicates additional information.

2 Identification

2.1 Device Designation

2.1.1 Nameplate

The following technical data are given on the instrument nameplate:

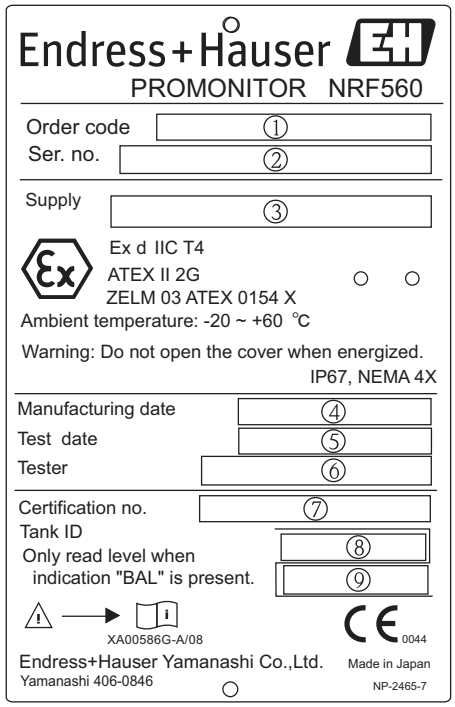

①	Order Code
②	Serial Number
③	Power Supply
④	Date Manufactured
⑤	Test Date
⑥	Tester
⑦	NMi W&M Certification Number
⑧	PTB W&M Certification Number
⑨	PTB W&M Certification Number

Figure 1: ATEX Approval Type Ex d

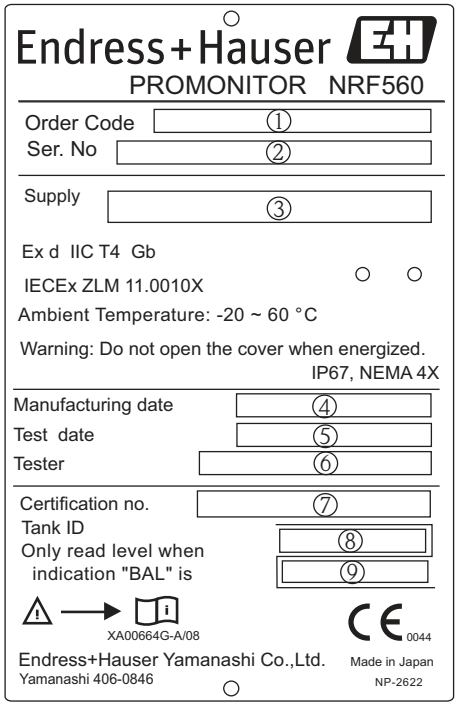

①	Order Code
②	Serial Number
③	Power Supply
④	Date Manufactured
⑤	Test Date
⑥	Tester
⑦	NMi W&M Certification Number
⑧	PTB W&M Certification Number
⑨	PTB W&M Certification Number

Figure 2: IECEx Approval Type Ex d

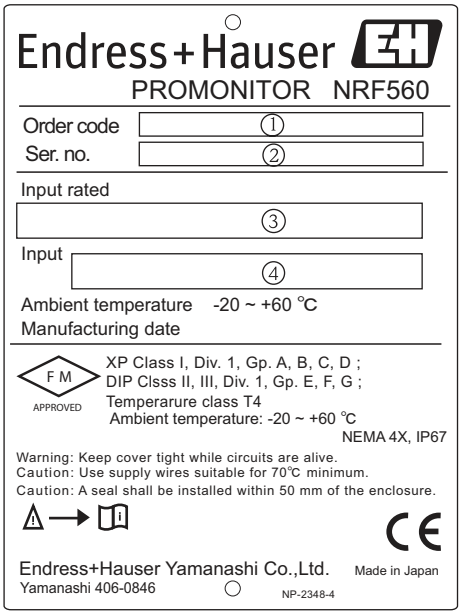

①	Order Code
②	Serial Number
③	Input Rated
④	Input

Figure 3: FM Approval

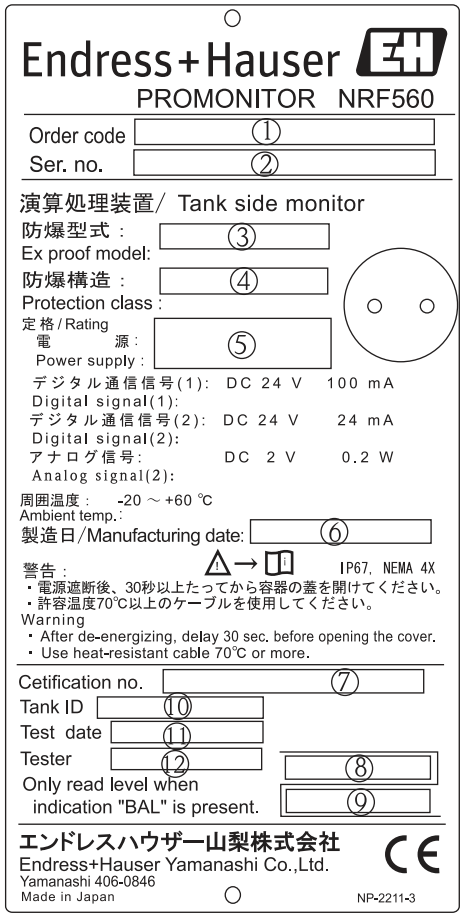

①	Order Code
②	Serial Number
③	Ex Proof Model
④	Protection Class
⑤	Power Supply
⑥	Date Manufactured
⑦	NMi W&M Certification Number
⑧	PTB W&M Certification Number
⑨	PTB W&M Certification Number
⑩	Tank ID
⑪	Test Date
⑫	Tester

Figure 4: TIIS Approval

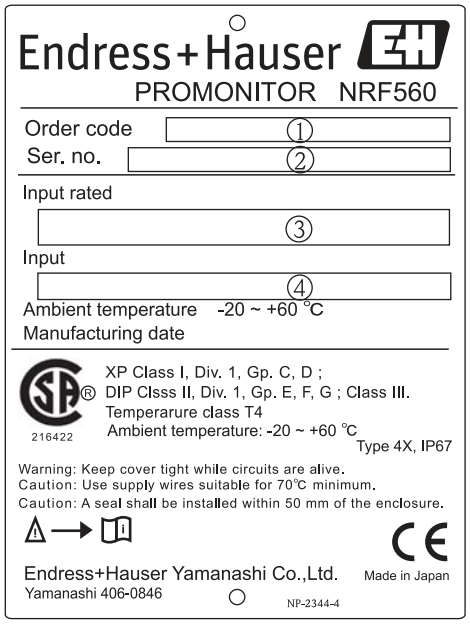

①	Order Code
②	Serial Number
③	Input Rated
④	Input

Figure 5: CSA Approval

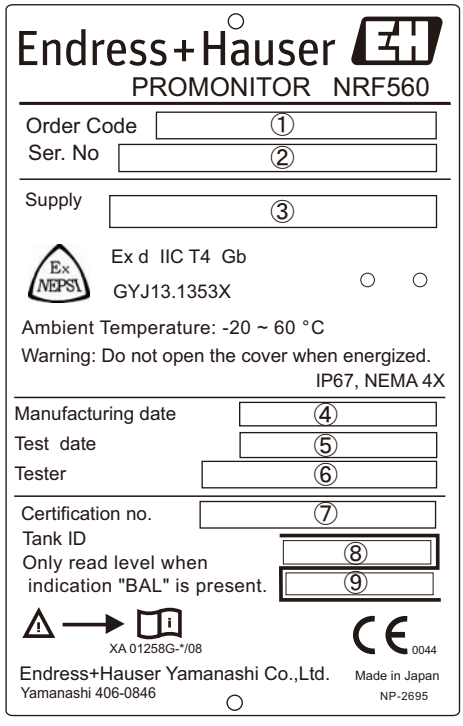

①	Order Code
②	Serial Number
③	Power Supply
④	Date Manufactured
⑤	Test Date
⑥	Tester
⑦	NMi W&M Certification Number
⑧	PTB W&M Certification Number
⑨	PTB W&M Certification Number

Figure 6: NEPSI Approval

2.2 Order Information

010	**Approval:**	
	0	Weather proof, IP67 NEMA 4X
	1	TIIS Ex d IIB T4
	4	FM XP Cl.I, Div.1, Gr.A-D
	5	CSA Cl.I, Div.1, Gr.A-D
	6	ATEX II 2G Ex d IIC T4
	8	ATEX II 2G Ex d IIC T4, NMi
	F	IECEx, Ex d IIC T4 Gb
	G	NEPSI Exd IIC T4
	9	Special version, TSP-no, to be spec.

020	**Cable Entry:**	
	A	2x thread G1/2
	B	2x thread NPT1/2
	D	2x thread M20
	Y	Special version, TSP-no, to be spec.

030	**Power Supply:**	
	3	85-264VAC, 50/60Hz
	4	20-62VDC, 20-55VAC, 50/60Hz
	9	Special version, TSP-no, to be spec.

040	**Mounting Bracket:**	
	0	not selected
	1	selected
	9	Special version, TSP-no, to be spec.

050	**Color:**	
	0	blue
	9	Special version, TSP-no, to be spec.

NRF560-	Completion product designation

2.3 Scope of Delivery

⚠ CAUTION

It is essential to follow the instructions concerning the unpacking, transport and storage of measuring instruments given in the chapter "Incoming acceptance, transport, storage" on.

The scope of delivery consists of:

- Assembled instrument
- Accessories (Mounting Bracket)

Accompanying documentation:

- Operating manual (this manual)
- Safety instruction

2.4 Documentation

The following documentation is provided with NRF560.

Documents	Designation	Content/Remarks
BA00425G	Operating Manual	Describes installation, commissioning operating and maintenance of NRF560.
XA00664G	Safety Instruction	Only for instrument versions approved for use in explosion hazardous areas; the nameplate specifies, which of these documents is relevant for your instrument version
XA00586G	Safety Instruction	Only for instrument versions approved for use in explosion hazardous areas; the nameplate specifies, which of these documents is relevant for your instrument version
XA01258G	Safety Instruction	Only for instrument versions approved for use in explosion hazardous areas; the nameplate specifies, which of these documents is relevant for your instrument version

2.5 Certificates and Approvals

CE Marks, Declaration of Conformity
The device is designed to meet state-of-the-art safety requirements, has been tested and left the factory in a condition in which it is safe to operate. The device complies with the applicable standards and regulations as listed in the EC declaration of conformity and thus complies with the statutory requirements of the EG directives. Endress+Hauser confirms the successful testing of the device by affixing to it the CE mark.

2.6 Registered trademarks

HART®
Registered trademark of HART Communication Foundation, Austin, USA

3 Installation

3.1 Incoming Acceptance, Transport, Storage

3.1.1 Incoming Acceptance

Check the packing and contents for any signs of damage.
Check the shipment, and make sure that nothing is missing and that the items match your order.

3.1.2 Transportation

⚠ WARNING

- Follow the safety instructions and conditions of transportation for instruments in excess of 18kg (40 lbs.).
- Do not lift the measuring instrument by its head during unpacking.

3.1.3 Storage

Pack the measuring instrument so that it is protected against impacts during storage and transportation.
The original packing material provides the optimum protection for this.
The allowed storage temperature is -20°C to +60°C (-4°F to +140°F).

3.2 Installation Condition

3.2.1 Dimensions

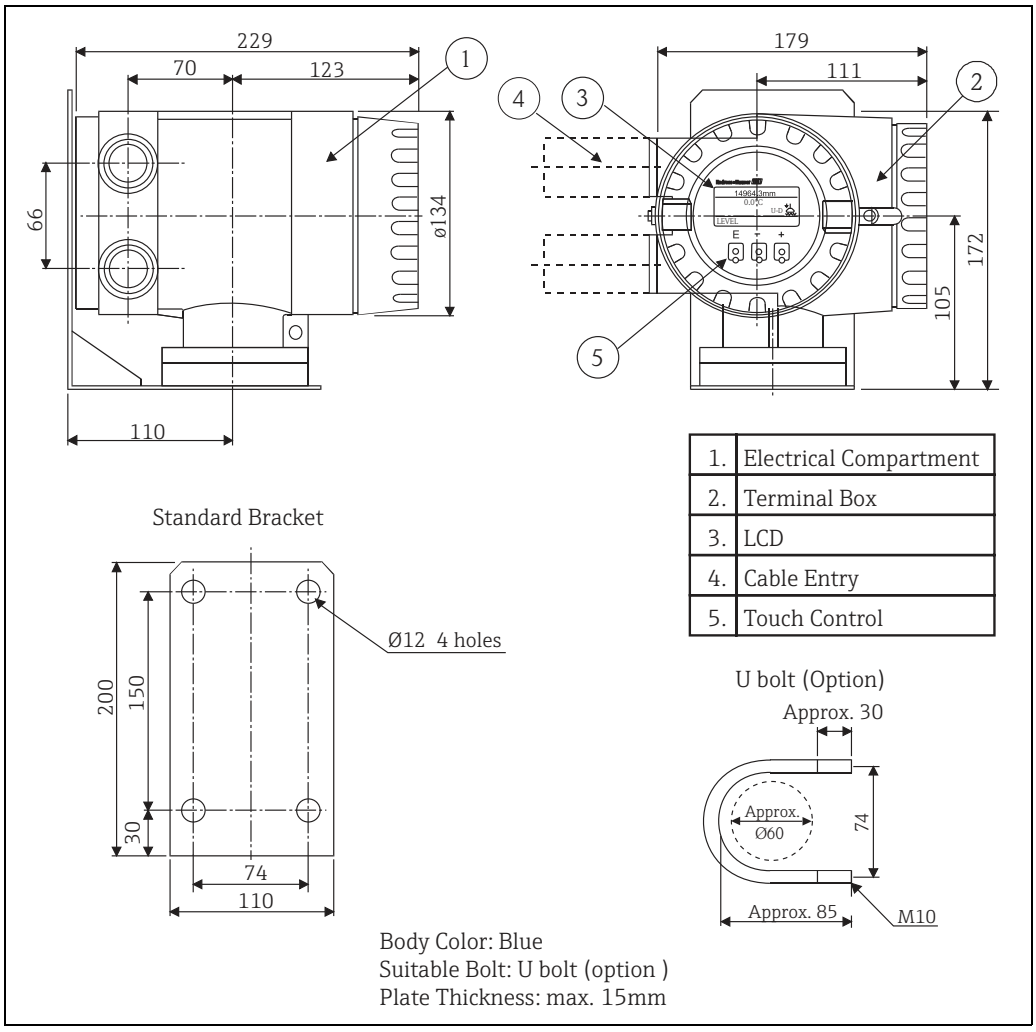

Figure 7: Dimensions

WARNING

NRF 560 is certified for use in explosion hazardous areas, however NRF560 should be installed as follows.

- Always take care not to damage NRF560 while installing.
- Tighten bolt firmly.
- Use the appropriate cable gland and tighten it firmly.

CAUTION

For installation of NRF 560, make sure that the ambient temperature does not exceed the limit.

3.3 Installation

The following installation procedures are available for NRF560 by using the standard bracket.

1. Mounting on the wall
2. Mounting on a 2" (50A) pipe
3. NRF 560 can be installed in a similar way without the bracket.

CAUTION
When attaching and bending the flexible tube, the radius of curvature must be 300 mm (11.8") or less at any bend portion.

3.3.1 Mounting on the Wall

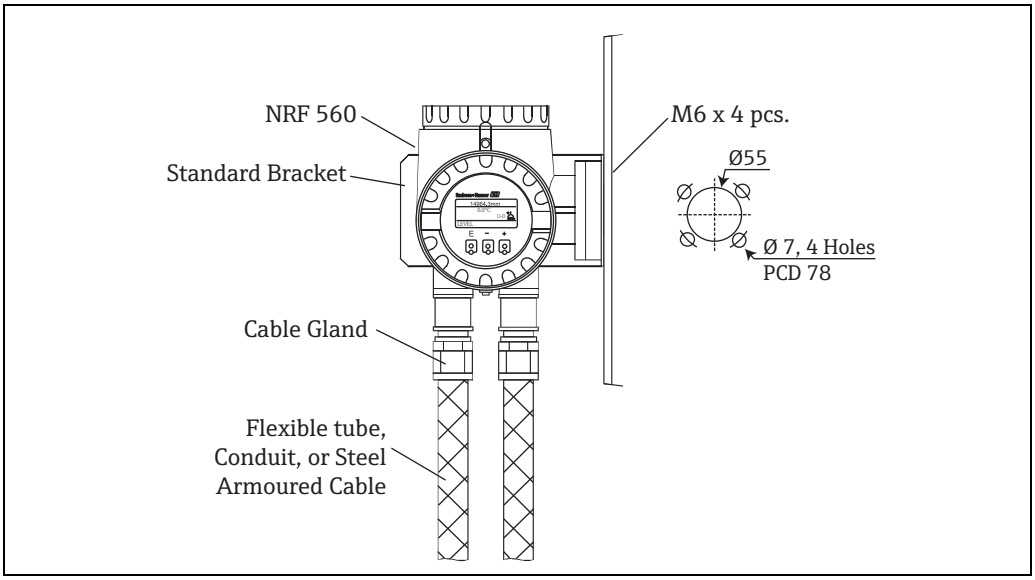

Figure 8: NRF560 Installation

CAUTION
NRF560 display can be rotated at 90 degrees depending on the installation.
Remove the cover to align the display to a desired position as follows.

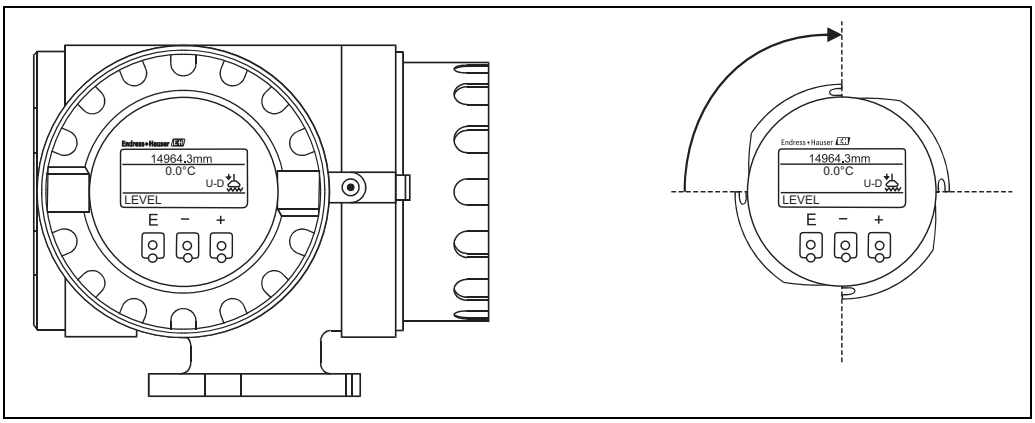

Figure 9: NRF560 Display

3.3.2 Installation to Pipe

When NRF560 can not be installed on the wall due to construction limit and there is a pipe at the side of a tank, the procedure below is available. Prepare U bolts (5A, M10). NRF560 bracket has holes for mounting U bolts.

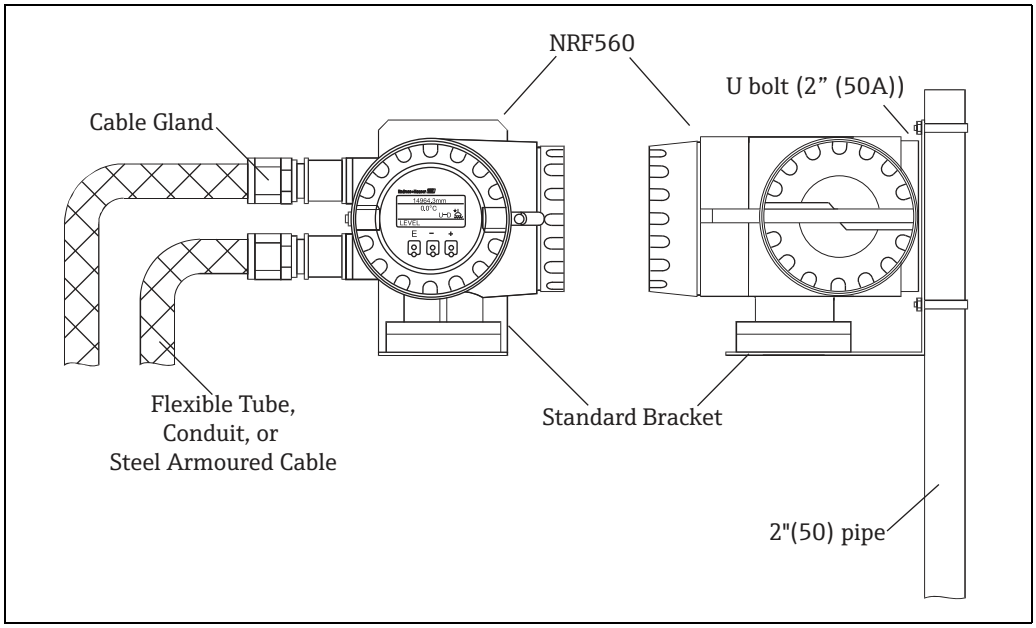

Figure 10: Pipe Installation

4 Wiring

WARNING

- Turn off the main power before installing NRF560 or changing wire.
- Check that voltage and frequency of the local power supply are within the range of the data described on the name plate.
- After completion of wiring, inspect the grounding of NRF560 before turning on the power.

4.1 Wiring Connection

Wiring Connection Procedure

1. Confirm that the main power is turned off.
2. Insert power supply and signal cables from the designated cable entries (see below).
3. Connect cables to each terminal.
   - Use a general crimped connection (not supplied) and do make sure wires are safely and securely connected.
4. After completing all electric connections, replace the terminal cover with screws.
5. Secure the plastic terminal guard.
6. Replace the terminal cover.

This completes the connection procedure.

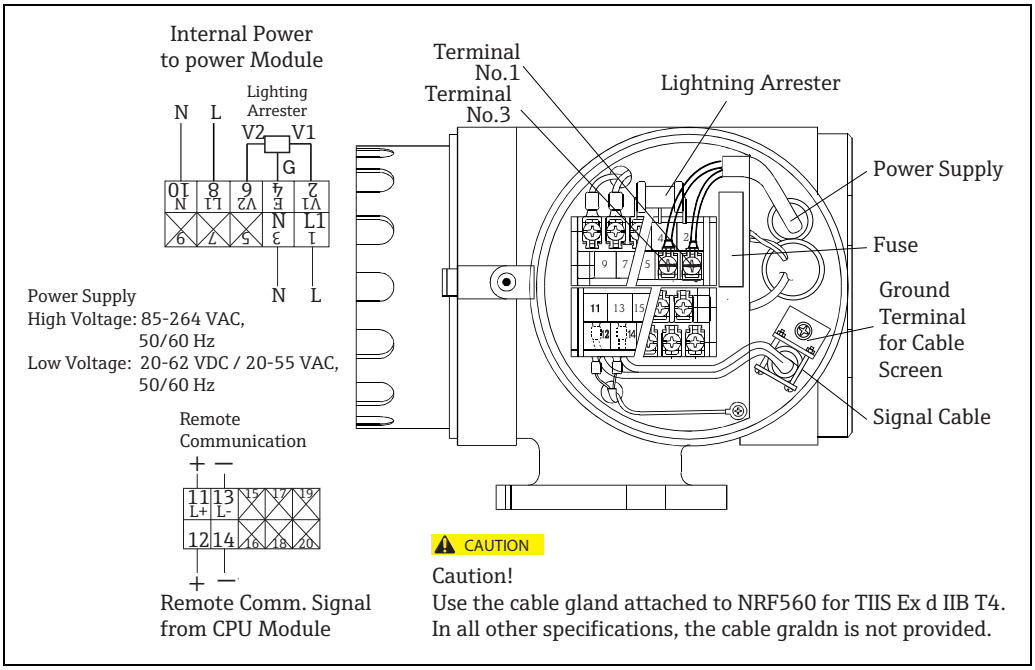

Figure 11: NRF560 Terminals

4.2 Input

The local HART communication enables data connection between NRF560 and NMS.

WARNING

- Use 24 A.W.G. (diameter of 0.51 or more) shielded cable, or use a steel-armored cable designed for measurement equipment. Use a shielded twisted-paired cable for local HART communication.
- Prepare 2C cable for power supply, and 1P cable for local HART communication.

4.3 Cable Gland

CAUTION

- For TIIS, Ex d IIB T4, cable glands are provided. Be sure to use provided cable glands.
- For all other specifications, except TIIS, Ex d IIB T4, cable glands are not provided.

NOTICE

Remove the unused cable gland, and plug the entries with blind plug.

5 Operation

5.1 Display and Operating Elements

5.1.1 Display

NRF560 has an illuminated LCD that consists of 4 lines with 128 x 64 (pixels). During normal operation, NRF560 shows level, temperature, and status of the device at "HOME" position. NRF560 also shows other data by touching "E, -, +" keys (a light touch with the fingertips is enough to show data). For the display of the other data and the programming of the parameters for operation, NRF560 uses a convenient programming matrix.

5.1.2 Operating Elements

NRF560 is operated by three visual operating elements, namely the keys "E", "+", and "-" . They are actuated when the appropriate field on the protective glass of the front is touched with the finger ("touch control"). The corresponding transmitting and receiving diodes are not affected by external influences, e.g. direct sunlight. The software and hardware installed in NRF560 rule out any malfunction that may be caused in this way. Even in explosive hazardous areas, the explosion-proof housing of the touch control ensures a safe access to the data.

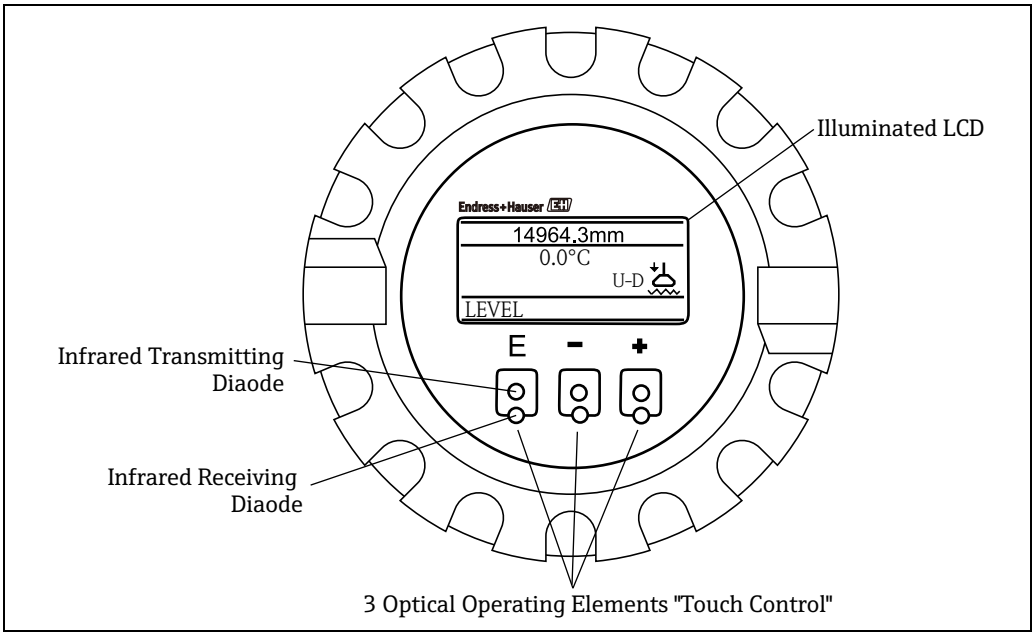

Figure 12: Display

5.2 Touch Control Functions

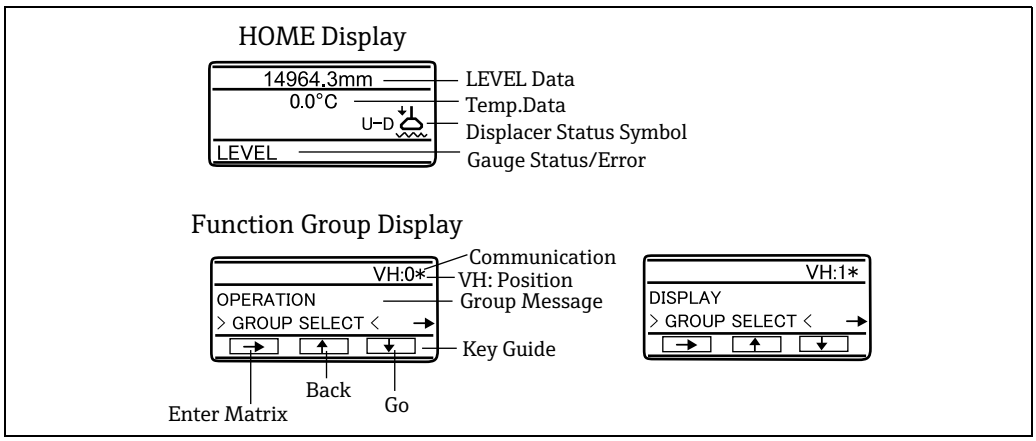

Key	Function
E	▪ Access to the programming matrix (touching the key for 3sec. or more) ▪ Return to the HOME position (touching the key for 3sec. or more) ▪ Moving horizontally within a function group to select functions ▪ Saving parameters or access code
+ −	▪ Moving vertically to select function groups ▪ Selecting or setting parameters ▪ Setting access code

NOTICE

LCD returns to HOME position when no key is touched for 10 minutes or more. Digits are incremented or decremented using by + or - key. When touching + or - key continuously, then the minimum digit changes first. After one cycle of the minimum, the second minimum changes. After one cycle of the second follows the third minimum, and so on. When releasing a finger from the touch control, then the procedure starts again from the minimum digit (Analogy of mechanical counter).

5.3 Programming Matrix

From NRF560, NMS can be operated with operation matrix group
The following NMS5 operations are available from NRF560.

- Level measurement
- Displacer hoist/stop
- Interface level measurement
- Tank bottom measurement

NMS operation is available by using access code 50.

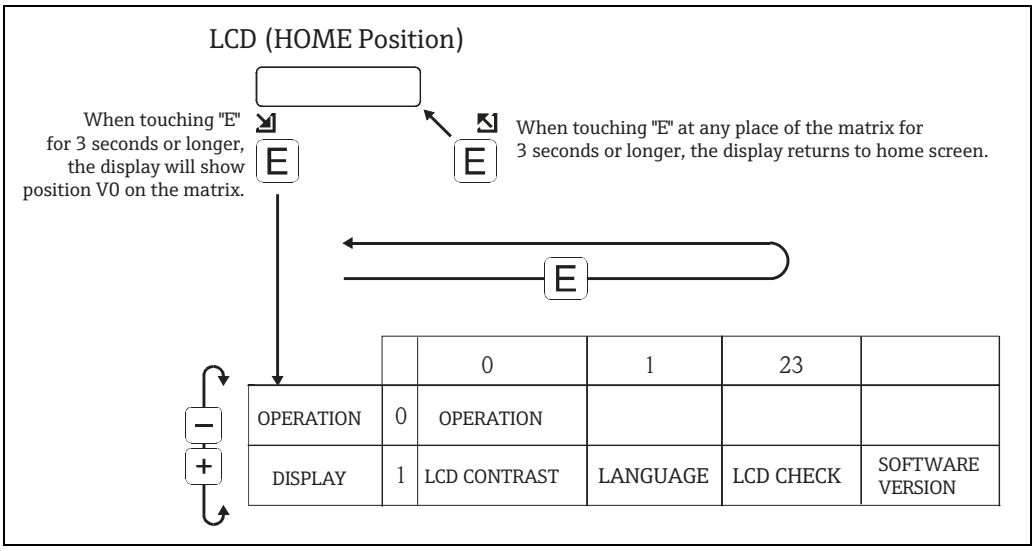

Figure 13: Matrix Screen

NOTICE
NRF560 access code is 50 only.

5.4 Access Code Setting

The access code is to control the security of setting data.

NRF560 Access Code

Security level		Access code
0	-	none
1	For Operator	50
	For Engineer	

NMS5 Access Code

Security level		Access code
0	-	none
1	For Operator	50
2	For Engineer	51

NOTICE

The higher levels include the lower ones. e.g. If access code 50 is specified for a function, then code 51 also enables editing. A function that requires access code 51, on the contrary, cannot be edited by code 50.

5.5 NMS Matrix Setting

The following settings are required at NMS to display NRF560 data on NMS5 screens.

⚠ CAUTION

Turn on the main power of NMS5 in advance.

Item	Procedure	Remarks
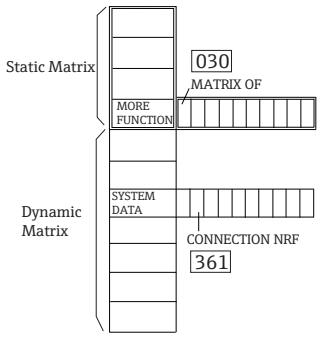 Figure 14: Matrix Service	1. Static Matrix "MORE FUNCTION", invoke GVH=030 "MATRIX OF" and select "SERVICE". 2. Invoke the Dynamic Matrix GVH=362 "CONNECTION NRF" screen. 3. Use the "+" and "-" keys to select either "CONTACT 1" or "CONTACT 2".	▪ Set access code 51. ▪ CONTACT 1... NRF 560 software version 1.6x and earlier (those NRF 560 that indicate no software version correspond to connection type 1). ▪ CONTACT 2... NRF 560 software version 1.8x and later.

5.6 How to Select Access Code

Item	Procedure	Remarks
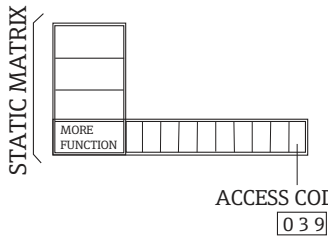 Figure 15: Access Code	1. In the static matrix "Switch and error/alarm", select G0V3H9 "ACCESS CODE." 2. The default value is "0". Keep touching "+" to set "50" or "51". 3. The first digit increases to 9, then the second digit increases. Stop touching "+" when reaching 50. 4. "50" is blinking. Gently touch "+" again to increase the second digit from 0 to 1. 5. Touch "E", "EDITING ENABLED" will be displayed.	▪ When touching "E" while displaying an access code 0,50, or 51,"EDITING LOCKED" will appear. ▪ If an access code is not selected before performing any setting, the screen will automatically change to show "EDITING ENABLED." Select "50" or "51", according to the matrix table.

5.7 HOME Position

After turning on the power supply, the LCD shows the current data on the HOME position screen.

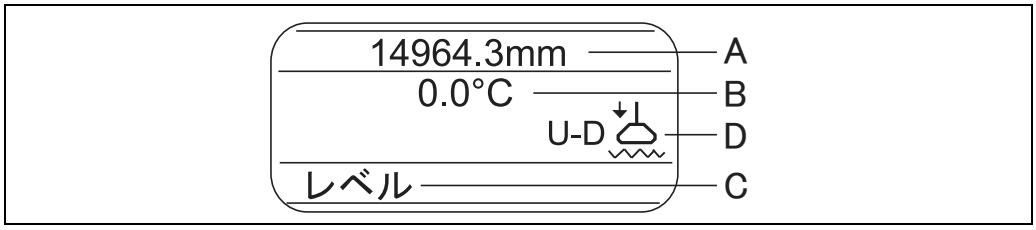

Figure 16: HOME Position

The letters A, B, and C stand for the areas where information on measured values and status of the device is displayed.

Area	Information
A	Current level
B	Current temperature
C	Gauge status
D	Displacer status

The meanings of gauge status are explained in the following table.

Gauge status	Meaning
G - RE	Reference position for measuring
UP	The measuring wire is hoisted.
STOP	The measuring wire stops.
LIQU	The liquid is being measured.
U - IF	The upper interface level is being measured.
LIF	The lower interface level is being measured.
BOTM	The tank bottom level is being measured.
U - DE	The upper liquid density is being measured.
M - DE	The middle liquid density is being measured.
B - DE	The bottom liquid density is being measured.
CAN	Resetting RELE.OVER TENS (over tension error).
TEAC	Calibration is being measured.
blank	Measuring is not possible.

The definition of the each Displacer status is as follows:

Displacer Status	Symbols	Meanings
BAL	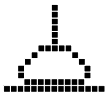	**Balance** The displacer is resting on the liquid surface or interface and in balanced status.
T - B	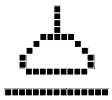	**Temporary Balance** Automatic weight calibration is being carried out.
U - U		**Unbalance Up** The displacer is being hoisted and in unbalanced status.
U - D		**Unbalance Down** The displacer is being lowered and in unbalanced status.
R - U		**Balance Up** The displacer is being hoisted and in correction of balance.
R - D		**Balance down** The displacer is being lowered and in correction of balance.
LOW		The displacer is resting at the lower stop.

NOTICE

If no LCD operation, NRF560 will turn off the backlighting of the LCD 12 hours later. Touching LCD again after this time will turn on the backlighting.

6 NRF560 Programming Matrix

The Programming Matrix is a table in which messages appearing in the NRF560's LCD screen are listed. When access code 50 is selected, all the matrix functions are available. In the table,

NRF560 programing matrix (Static Matrix)

Group Massage	V \ H	0	1	2	3	4	5	6	7	8	9
Operation	0	Operation Display(50)									
Display	1	LCD CONTRAST Display(50)	LANGUAGE Select(50)	LCD CHECK Select(50)	SOFTWEAR VERSION Display(50)						ACCESS CODE Set(50)
	2										
	3										

Display Text
Parameters
unit, etc.
Mode(Access Code)

6.1 Description of Programming Matrix

Matrix group	Function Group	Item	Access Code	Short Description	Default Value	Set Select Display	Possible Settings, Selection, or Display	Index No, GVH
STATIC MATRIX (This word is not shown)	OPERATION	OPERATION	50	Select operation of NMS5 displacer. Find desired selection in the column of "setting value or setting word" using "+" and "- " key and save the setting using E (Enter) key.	LEVEL	Select	LEVEL UP STOP BOTTOM LEVEL MIDD. INTERF. LEVEL UPPER DENSITY MIDDLE DENSITY DENSITY BOTTOM REPEATABILITY WATER DIP	000
	Display	LCD CONTRAST	50	Varies the display contrast in 16 steps	Phase16	Set	(The contrast can be adjusted with the "+","- " keys)	010
		LANGUAGE	50	Checks if the LCD display is in good order.	English	Select	English Japanese Chinese	011
		LCD CHECK	50	Checks if the LCD display is in good order; if it is, it blackens for 3 seconds when selecting ON, and whitens for the same length of time when selecting OFF.	OFF	Select	ON OFF	012
		SOFTWARE VERSION	50	Shows NRF560's control software version.	V.1.94	Display		013
		ACCESS CODE	50	Set access code to view and change to matrix data.	0	Set	0, 50	019

7 NMS5 Programming Matrix

This section shows the programming matrix of NMS5 (Necessary for NRF560 only). Each matrix group appears on a separate page. The functions are described in the following way:

Default Data
Display Text
Parameters, unit, etc
Mode (Code)

NMS5 Programming Matrix (Static Matrix)

GROUP MESSAGE	V \ H	0	1	2	3	4	5	6	7	8	9
MEASURED VALUE 1	0	16000.00mm	0.0 mm	0.0 mm	0.0 mm	0.0 mm	1.000 g/ml	1.000 g/ml	1.000 g/ml	0.0 mm	
		MEASURED LEVEL	ULLAGE LEVEL	UPPER INTERF. LEV	MIDD. INTERF. LEV	BOTTOM LEVEL	UPPER DENSITY	MIDDLE DENSITY	DENSITY BOTTOM	LEVEL DATA	
							0.000 - 3.000	0.000 - 3.000	0.000 - 3.000		
		Display	Display	Display	Display	Display	Display/Set (50)	Display/Set (50)	Display/Set (50)	Display	
MEASURED VALUE 2	1	0.0°C			0.0°C	0.0 mm			0 mm	16000.0 mm	mm
		LIQUID TEMP.	DEV(1)	DEV(2)	GAS TEMPERATURE	WATER BOTTOM			ZERO POINT	SPAN	LENGTH UNIT
		Display	Display	Display	Display	Display			Display	Display	Display
OPERATION	2	STOP	STOP	UNBALANCED		LEVEL	LEVEL			0	8424
		OPERATION 16000	OPERATING STATUS	BALANCING STATUS		OPERAT.BY NRF	OPERAT. BY HOST			DEVICE ID	SOFTWARE VERSION
		See operation commands	See status table								
		Select (50)	Display	Display		Display	Display				
MORE FUNCTION	3	CALIBRATION			98 627 8:21:00	NO ALARM	NO ALARM	NO ERROR	MPU:START ACT	OFF	0
		MATRIX OF			CALENDER	ALARM CONTACT O	LA 0 0 0 0	DIAGNOSTIC CO 0	98 627 752 0 0	RESET ALM. DIAGNO	ACCESS CODE
		0 - 8			Curect data	Curect data	Curect data	Curect data	Curect data		0, 50, 51, 777
		Select			Display	Display	Display	Display	Display		Set

NMS5 Programming Matrix (Dynamic Matrix, Service: G3)

GROUP MESSAGE	V \ H	0	1	2	3	4	5	6	7	8	9
MEAS. WIRE & DRUM	4	300.00 mm WIRE DRUM CIRC. 0 - 999.9 Set (51)	1.4g / 10m WIRE WEIGHT 0 - 999.9 Set (51)	255.0 g DISPLACER WEIGH 0 - 999.9 Set (51)	145.0 ml DISPLACER VOLUM 0 - 999.9 Set (51)	60 ml BALANCE VOLUME 0 - 999.9 Set (51)	1.0 ml VOLUME TOLERANCE 0 - 99.9 Set (51)		20 X 100 mS DELAY 0 - 99 Set (51)	0.00 mm/m DRUM CORRECTION 0 - 99.00 Set (51)	0 count DISPL. HUNT.COUNT 0 - 99 Set (51)
GAUGE DATA	5	0.0 mm ACTUAL LEVEL Display (530)	0 Count ENCODER COUNT Display (530)	OFF NON HYSTER. MODE ON Select (51)	OFF HI.ACCURACY MODE ON Select (51)	0 s HI. ACCR. OPE. TIME 0 - 600 Set (51)	50 mm HI. ACC. DISP. UP 0 - 300 Set (51)	999 °C GAUGE TEMP. Display (51)			
SYSTEM DATA	6	LOCAL : MASTER SENSOR DATA REMOTED COM. ON SOFTWARE =04.24 HARDWARE = TGB 04 GEAR 1:36 NOT OVERSPILL	OFF CONNECTION NRF CONTACT 1 CONTACT 2 Select (51)	OFF CONNECTION NMT SPOT TEMP. AVERAGE TEMP. Select (51)						IF_LEVEL SELECT UP_IF_LEVEL WATER BOTTOM WATER BOTTOM 2 Select (51)	OFF SOFT RESET Select (51)
SERVICE	7	0.0 g MEASURED WEIGHT Display	OFF RELE. OVER TENS ON Select (51)	OFF DRUM SETTING ON Select (51)	OFF WEIGHT CALIBR. ON Select (51)					70 mm DISPL. REFERENCE Set (51)	0.0 g ZERO ADJ. WEIGHT Set (51)
SENSOR VALUE	8	Sa=21000 : A=21000 Sb=11000 : B=11000 Display (51)									
SENSOR DATA	9					0 0 0.0 g WT. COUNT CAL A Display (51)	0 0 0..0 g WT. COUNT CAL B Display (51)				

8 Maintenance

8.1 Exterior Cleaning

When cleaning the exterior of NRF560, always use cleaning agents which will not cause corrosion or other damage to the housing and its surface seals.

8.2 O-ring Replacement

NRF560 O-ring may need replacing periodically The period of replacement varies depending on usage environment.

8.3 Repairs

The Endress+Hauser repair policy is based on the fact that the measuring devices have a modular design and that customers are able to undertake repairs themselves. Spare parts are contained in corresponding kits along with their related replacement instructions. Endress+Hauser provides spare parts for repairs of TMD, which are located with their order numbers on later pages (refer to "10.1 Spare Parts"). Contact Endress+Hauser service representatives for further assistance regarding service and spare parts.

8.4 Repairs to Ex-approved Devices

When performing repairs on Ex-approved devices, note the following:

- Repairs of Ex-approved devices may only be performed by trained personnel or by Endress+Hauser Service.
- Comply with the prevailing standards, national Ex-area regulations, safety instructions (XA) and other relevant rules.
- Only use original spare parts provided by Endress+Hauser.
- When ordering spare parts, note the device information on the nameplate. Replace parts only with parts that have the same device information.
- Perform repairs according to the instructions. When completing repairs, perform the specified routine test on the device.
- Only Endress+Hauser service representatives may convert a certified device into a different certified variant.
- Document all repair work and conversions.

9 Accessories

Bracket
U bolt is not provided with bracket for installing NF560 to a tank. Contact Endress+Hauser Japan if needed.

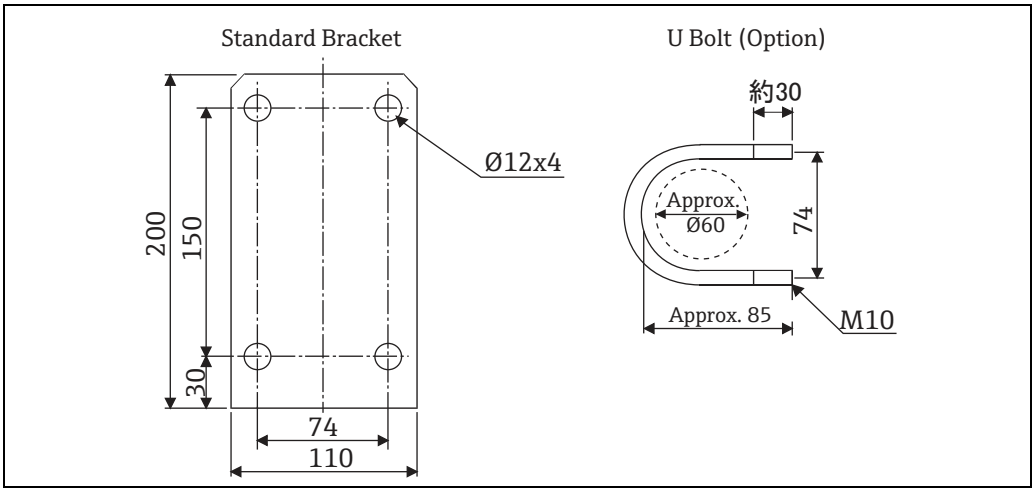

Figure 17: Bracket

10 Troubleshooting

If an error occurs in NMS5, or NRF560, your current matrix and error message will blink alternately in NRF560's LDC screen.
Controls relevant to the display are operative even while an error message is displayed.

Massage	Cause	Remedy
NMS COMM ERRO	Communication error for NMS	Check the following items. ▪ Signal cable to NMS ▪ NMS setting ▪ Check NMS.
LOCAL ERROR: NMT	Communication error for NMT	Check the following items. ▪ Signal cable to NMT ▪ NMT setting ▪ Check NMT.
LOCAL ERRO: DEV 1 (or 2)	Communication error for HART device 1 (or 2)	Check the following items. ▪ Signal cable to HART Device 1 (or 2) ▪ HART Device setting ▪ Check the device.
DEVICE ERROR: NMS	NMS error arose.	Check the diagnosis message of NMS
DEVICE ERROR: NMT	NMT error arose.	Check the diagnosis message on the NMS matrix.
DEVICE ERROR: DEV 1 (or 2)	HART device error arose.	Check the HART device.
OVER TENSION	NMS displacer did not move due to sticking.	Check the displacer.
UNDER WEIGHT	Error arises when measuring wire for displacer is cut or disconnected.	Check the measuring wire.
Z PHASE NO INPUT	NMS triggered Z phase no input error.	Check NMS. Replace NMS detection unit.
SIFA ERROR	NMS triggered SIFA error.	Check NMS. Replace CPU board.
ROM ERROR	NRF560 EEROM data malfunction	Contact Endress+Hauser Japan.
POWER FAILURE	Supply voltage has dropped.	Check the power supply.
RAM FAILURE	NRF560 RAM data malfunction	Contact Endress+Hauser Japan.

10.1 Spare Parts

Spare parts are contained in kits. Spare parts for NRF560 which can be ordered from Endress+Hauser are shown with their order numbers in the diagram below. Contact Endress+Hauser service representatives for further assistance.

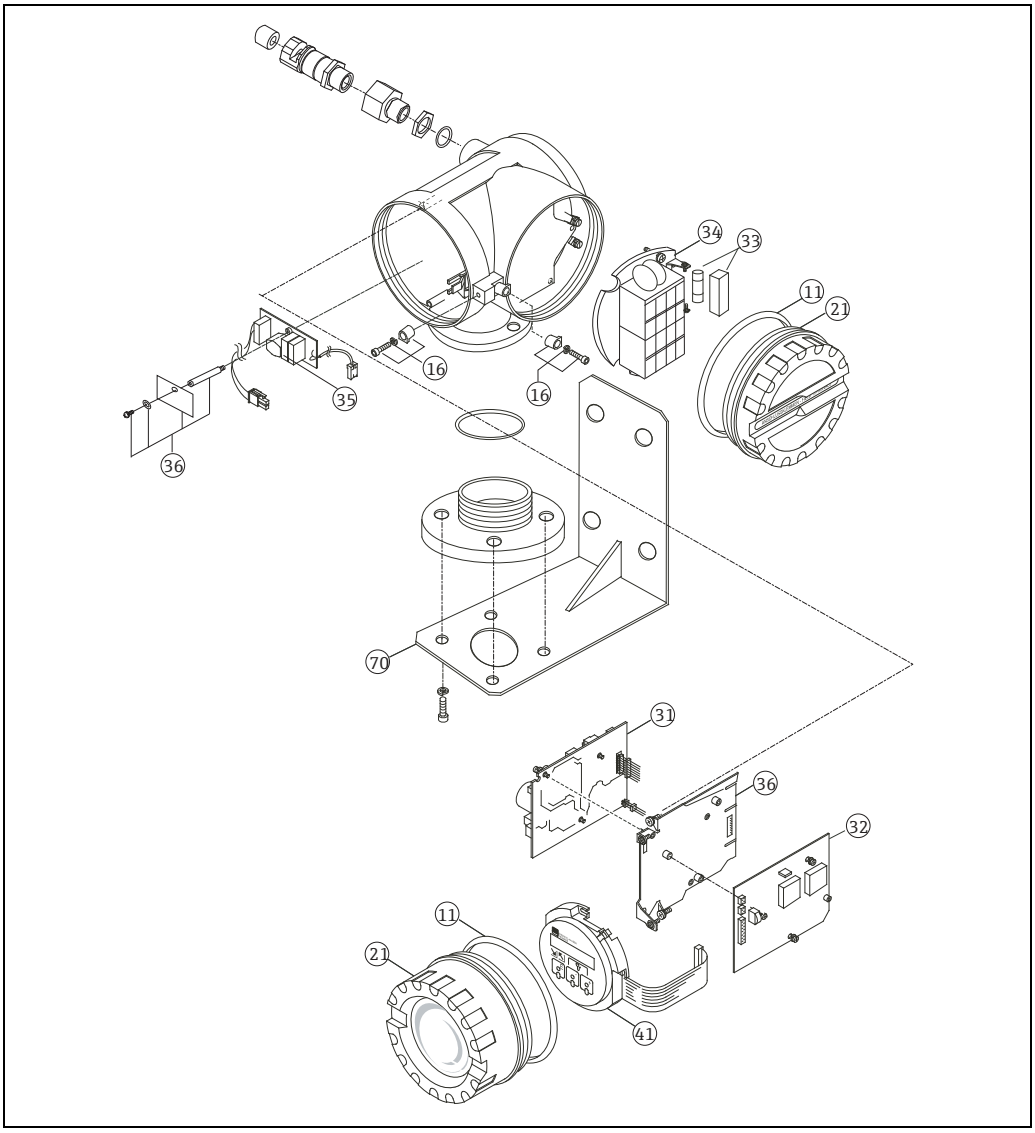

Figure 18: Spare Parts

No.	Parts No.	Parts Name	No.	Parts No.	Parts Name
11	017803-0030	O-ring,display cover, NBR	33	017801-0105	Fuse 250VAC T2A50
16	56004435	Set NRF screw part		017801-0107	Fuse cover, 10 pcs.
21	017800-0111	Cover, display module, aluminium	34	017801-0030	Terminal board(Ex d)
	017801-0133	Cover, terminal box, Alu	35	017801-0020	Filter board+spacer 85...260VAC
31	70103940	POW-6, HV,nonEx i	36	71070911	Chassis+EMC filter cover
	70103941	POW-6, LV,non Ex i	41	017801-0010	Display module, 3 x key optical
32	017801-0001	Comm. board FCB1 v1.92, 2 line disp.		70103938	Display module 4 line,3key optical
	70109104	Comm. board FCB1 v1.94, graphic disp.	70	017801-0111	Assembly bracket 90deg, Alu

10.2 Return

1. The following procedure must be performed before returning NRF560 to Endress+Hauser e.g. for repair or calibration.
   - Remove all residue. Pay special attention to the gasket grooves and crevices where fluid may be present. This is especially important if the fluid is corrosive, poisonous, carcinogenic, radioactive, or otherwise hazardous.
   - Always enclose a duly completed "Declaration of Hazardous Material and De-contamination" form. Only then can Endress+Hauser transport, examine, and repair a returned device.
   - Enclose special handling instructions if necessary, for example a safety data sheet as per EN 91/155/EEC.
2. Additionally specify:
   - An exact description of the application
   - The chemical and physical characteristics of the instrument
   - A short description of the error that occurred (specify the error code where possible)
   - Operating time of the device

A copy of the “Declaration of Contamination” is included at the end of this operating manual.

WARNING

- Hazardous materials may be attached to damaged parts of NRF560 or its plastic material. Unless hazardous materials are completely removed from NRF560, no repair request is accepted.
- Incomplete cleaning of the instrument may result in waste disposal or cause harm to personnel (burns, etc.). Any costs arising from this will be charged to the operator of the instrument.

10.3 Disposal

In case of disposal, separate the various components according to their materials.

10.4 Software History

Software Version / Date	Software Changes	Documentation Changes
V.1.82 / 09.1997	Original software	
V.1.92 / 09.2002	Add density profile operation	BA003N/08/en/11.04
V 1.94 / 01.2005	Change graphic LCD	BA1003N/08/en/08.06

11 Technical Data

Items	Descriptions
Input	Multidrop local HART
Display (LCD)	4 line. 128 x 64 (pixels), illuminated Language selection: English, Chinese, Japanese,
Programming	3 visual operating elements for selection of matrix functions ("touch control")
Power Supply	High Voltage: 85AC: to 264VAC, 50/60 Hz Low Voltage: 20AC: 55VAC, 20DC: 62VDC, 50/60Hz, ⚠ WARNING Allowable voltage supply is specified depending on each Ex approval. Refer to the designated certification.
Power Consumption	Maximum 25 VA
Arrester	Standard equipment
Ambient Temperature	-20 to 60°C (-4 to 140°F) (standard) ⚠ CAUTION LCD can not display -10°C or less.
Storage Temperature	-20 to +60°C (-4 to 140°F)
Weight	Approx. 6.5kg
Housing Material	Aluminum, coated with rust inhibitor paint
Ex Certification	TIIS Ex d IIB T4 FM XP Cl.I, Div.1, Gr.A-D CSA Cl.I, Div.1, Gr.A-D ATEX II 2G Ex d IIC T4 ATEX II 2G Ex d IIC T4, NMi IECEx, Ex d IIC T4 Gb NEPSI Exd IIC T4
Degree of Protection	IP67 with closed housing and cable glands of same protection type
Cable Entries	G 1/2, NPT 1/2, M 20
EMC Directive	89/336/EC

Endress+Hauser

People for Process Automation

Declaration of Hazardous Material and De-Contamination

Erklärung zur Kontamination und Reinigung

RA No. ☐☐☐☐☐☐☐

Please reference the Return Authorization Number (RA#), obtained from Endress+Hauser, on all paperwork and mark the RA# clearly on the outside of the box. If this procedure is not followed, it may result in the refusal of the package at our facility.

Bitte geben Sie die von E+H mitgeteilte Rücklieferungsnummer (RA#) auf allen Lieferpapieren an und vermerken Sie diese auch außen auf der Verpackung. Nichtbeachtung dieser Anweisung führt zur Ablehnung ihrer Lieferung.

Because of legal regulations and for the safety of our employees and operating equipment, we need the "Declaration of Hazardous Material and De-Contamination", with your signature, before your order can be handled. Please make absolutely sure to attach it to the outside of the packaging.

Aufgrund der gesetzlichen Vorschriften und zum Schutz unserer Mitarbeiter und Betriebseinrichtungen, benötigen wir die unterschriebene "Erklärung zur Kontamination und Reinigung", bevor Ihr Auftrag bearbeitet werden kann. Bringen Sie diese unbedingt außen an der Verpackung an.

Type of instrument / sensor
Geräte-/Sensortyp _____

Serial number
Seriennummer _____

☐ **Used as SIL device in a Safety Instrumented System** / Einsatz als SIL Gerät in Schutzeinrichtungen

Process data/Prozessdaten

Temperature / Temperatur _____ [°F] _____ [°C]
Pressure / Druck _____ [psi] _____ [Pa]
Conductivity / Leitfähigkeit _____ [µS/cm]
Viscosity /Viskosität _____ [cp] _____ [mm²/s]

Medium and warnings
Warnhinweise zum Medium



	Medium /concentration Medium /Konzentration	Identification CAS No.	flammable entzündlich	toxic giftig	corrosive ätzend	harmful/ irritant gesundheits-schädlich/ reizend	other * sonstiges*	harmless unbedenklich
Process medium / Medium im Prozess								
Medium for process cleaning / Medium zur Prozessreinigung								
Returned part cleaned with / Medium zur Endreinigung								

* explosive; oxidising; dangerous for the environment; biological risk; radioactive
* explosive;brandfördernd; umweltgefährlich; biogefährlich; radioaktiv

Please tick should one of the above be applicable, include safety data sheet and, if necessary, special handling instructions.
Zutreffendes ankreuzen; trifft einer der Warnhinweise zu, Sicherheitsdatenblatt und ggf. spezielle Handhabungsvorschriften beilegen.

Descriptio n of failure / Fehlerbeschreibung _____

_____

_____

Company data / Angaben zum Absender

Company /Firma _____
_____
Address / Adresse
_____
_____

Phone number of contact person / Telefon-Nr. Ansprechpartner:
_____
Fax / E-Mail _____
Your order No. / Ihre Auftragsnr. _____

"We hereby certify that this declaration is filled out truthfully and completely to the best of our knowledge.We further certify that the returned parts have been carefully cleaned. To the best of our knowledge they are free of any residues in dangerous quantities."

"Wir bestätigen, die vorliegende Erklärung nach unserem besten Wissen wahrheitsgetreu und vollständig ausgefüllt zu haben. Wir bestätigen weiter, dass die zurückgesandten Teile sorgfältig gereinigt wurden und nach unserem besten Wissen frei von Rückständen in gefahrbringender Menge sind."

_____ (place, date / Ort, Datum)

_____ Name, dept./Abt. (please print /bitte Druckschrift)

_____ Signature / Unterschrift

www.addresses.endress.com

Endress+Hauser

People for Process Automation