Level Pressure Flow Temperature Liquid Analysis Registration Systems Components Services Solutions

Operating Instructions

Levelflex M FMP40

Guided Level-Radar

HART COMMUNICATION PROTOCOL

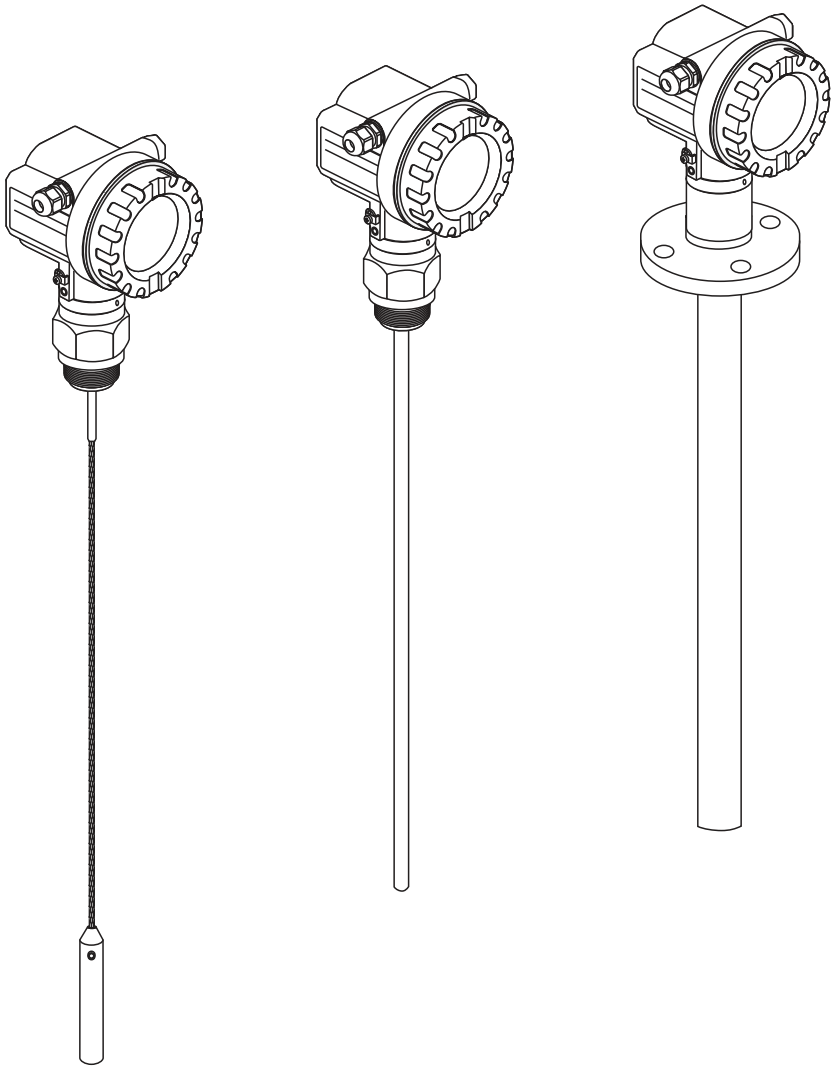

BA00242F/00/EN/13.10
71120266

Valid as of software version:
01.04.zz

Endress+Hauser

People for Process Automation

Brief Operating Instructions

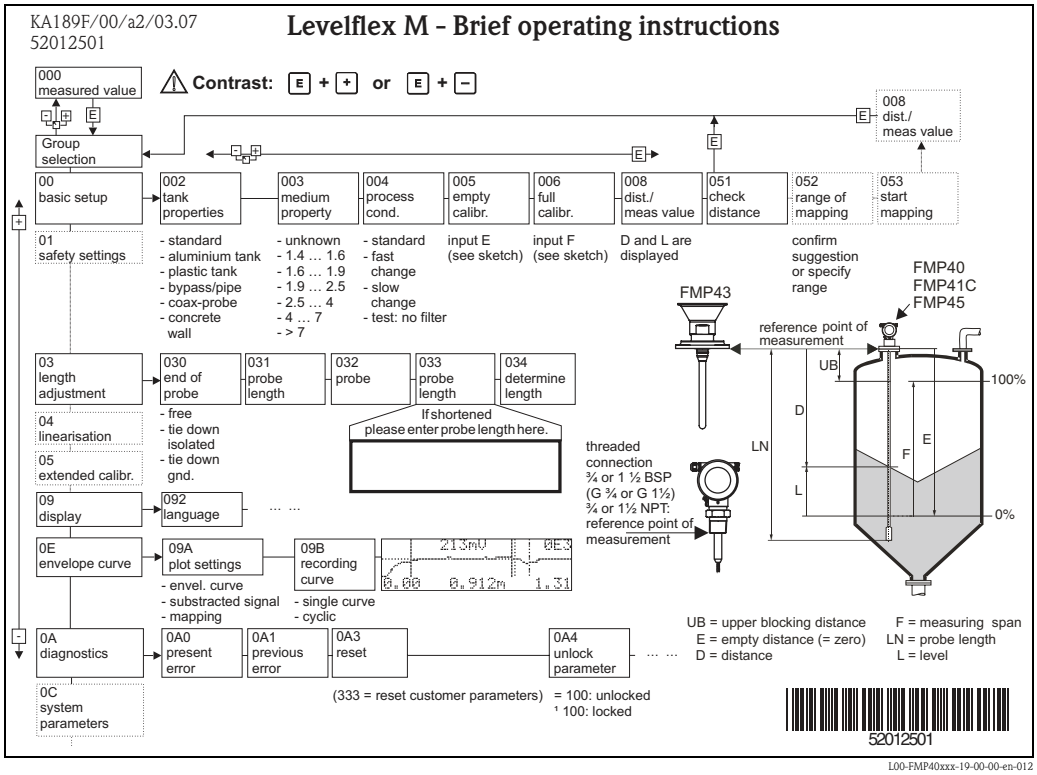

Note!
This Operating Instructions explains how to install and commission the level transmitter.
All functions that are required for a typical measuring task are taken into account here.
In addition, the Levelflex M provides many other functions for optimizing the measuring point and conventing measured values. These functions are not included in these Operating Instruction.

An **overview of all device functions** can be found on → 98.

The Operating Instuctions BA00245F/00/EN "Description of Instrument Functions" provides an **extensive description of all device functions**, which can be found on the enclosed CD-ROM.

The Operating Instructions can also be found on our homepage: www.endress.com

Table of contents

1 Safety instructions 4

1.1 Designated use 4
1.2 Installation, commissioning and operation 4
1.3 Operational safety and process safety 4
1.4 Notes on safety conventions and symbols 5

2 Identification 6

2.1 Device designation 6
2.2 Scope of delivery 10
2.3 Certificates and approvals 10
2.4 Registered trademarks 10

3 Mounting 11

3.1 Quick installation guide 11
3.2 Incoming acceptance, transport, storage 12
3.3 Installation conditions 13
3.4 Installation 15
3.5 Post-installation check 33

4 Wiring 34

4.1 Quick wiring guide 34
4.2 Connecting the measuring unit 36
4.3 Recommended connection 39
4.4 Degree of protection 39
4.5 Post-connection check 39

5 Operation 40

5.1 Quick operation guide 40
5.2 Display and operating elements 42
5.3 Local operation 44
5.4 Display and acknowledging error messages 47
5.5 HART communication 48

6 Commissioning. 50

6.1 Function check 50
6.2 Switching on the measuring device 50
6.3 Basic Setup 51
6.4 Basic Setup with the VU331 53
6.5 Blocking distance 61
6.6 Envelope curve with VU331 63
6.7 Function "envelope curve display" (0E3) 64
6.8 Basic setup with the Endress+Hauser operating program 67

7 Maintenance. 73

7.1 Exterior cleaning 73
7.2 Repairs 73
7.3 Repairs to Ex-approved devices 73
7.4 Replacement 73

8 Accessories 74

8.1 Weather protection cover 74
8.2 Flange with horn adapter to adapt on the following nozzles 74
8.3 Remote display and operation FHX40 75
8.4 Centering disks 76
8.5 Commubox FXA195 HART 77
8.6 Commubox FXA291 77
8.7 ToF Adapter FXA291 77
8.8 Screw in flange FAX50 78
8.9 Extension rod / Centering 79
8.10 Isolated tie down 80
8.11 HART Loop Converter HMX50 80

9 Trouble-shooting 81

9.1 Trouble-shooting instructions 81
9.2 System error messages 82
9.3 Application errors 84
9.4 Spare Parts 86
9.5 Return 87
9.6 Disposal 87
9.7 Software history 88
9.8 Contact addresses of Endress+Hauser 88

10 Technical data 89

10.1 Additional technical data 89

11 Appendix 98

11.1 Operating menu HART (Display modul) 98
11.2 Patents 100

Index 101

1 Safety instructions

1.1 Designated use

The Levelflex M is a compact level transmitter for the continuous measurement of solids and liquids, measuring prinziple: Guided Level Radar / TDR: **T**ime **D**omain **R**eflectometry.

1.2 Installation, commissioning and operation

The Levelflex M has been designed to operate safely in accordance with current technical, safety and EU standards. If installed incorrectly or used for applications for which it is not intended, however, it is possible that application-related dangers may arise, e.g. product overflow due to incorrect installation or calibration. For this reason, the device must be installed, connected, operated and maintained according to the instructions in this manual: personnel must be authorised and suitably qualified. The manual must have been read and understood, and the instructions followed. Modifications and repairs to the device are permissible only when they are expressly approved in the manual.

1.3 Operational safety and process safety

Alternative monitoring measures must be taken to ensure operational safety and process safety during configuration, testing and maintenance work on the device.

Hazardous areas

Measuring systems for use in hazardous environments are accompanied by separate "Ex documentation", which is an integral part of this Operating Manual. Strict compliance with the installation instructions and ratings as stated in this Additional documentation is mandatory.

- Ensure that all personnel are suitably qualified.
- Observe the specifications in the certificate as well as national and local regulations.

1.4 Notes on safety conventions and symbols

In order to highlight safety-relevant or alternative operating procedures in the manual, the following conventions have been used, each indicated by a corresponding symbol in the margin.

Safety conventions	
	**Warning!** A warning highlights actions or procedures which, if not performed correctly, will lead to personal injury, a safety hazard or destruction of the device.
	**Caution!** Caution highlights actions or procedures which, if not performed correctly, may lead to personal injury or incorrect functioning of the device.
	**Note!** A note highlights actions or procedures which, if not performed correctly, may indirectly affect operation or may lead to an device response which is not planned.
Explosion protection	
	**Device certified for use in explosion hazardous area** If the device has this symbol embossed on its name plate it can be installed in an explosion hazardous area.
	**Explosion hazardous area** Symbol used in drawings to indicate explosion hazardous areas. Devices located in and wiring entering areas with the designation "explosion hazardous areas" must conform with the stated type of protection.
	**Safe area (non-explosion hazardous area)** Symbol used in drawings to indicate, if necessary, non-explosion hazardous areas. Devices located in safe areas still require a certificate if their outputs run into explosion hazardous areas.
Electrical symbols	
	**Direct voltage** A terminal to which or from which a direct current or voltage may be applied or supplied.
	Alternating voltage A terminal to which or from which an alternating (sine-wave) current or voltage may be applied or supplied.
	**Grounded terminal** A grounded terminal, which as far as the operator is concerned, is already grounded by means of an earth grounding system.
	**Protective grounding (earth) terminal** A terminal which must be connected to earth ground prior to making any other connection to the equipment.
	**Equipotential connection (earth bonding)** A connection made to the plant grounding system which may be of type e.g. neutral star or equipotential line according to national or company practice.
	**Temperature resistance of the connection cables** States, that the connection cables must be resistant to a temperature of at least 85 °C.

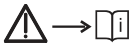	**Safety Instruction** For safety instructions refer to the manual for the appropriate device version.

2 Identification

2.1 Device designation

2.1.1 Nameplate

The following technical data are given on the device nameplate:

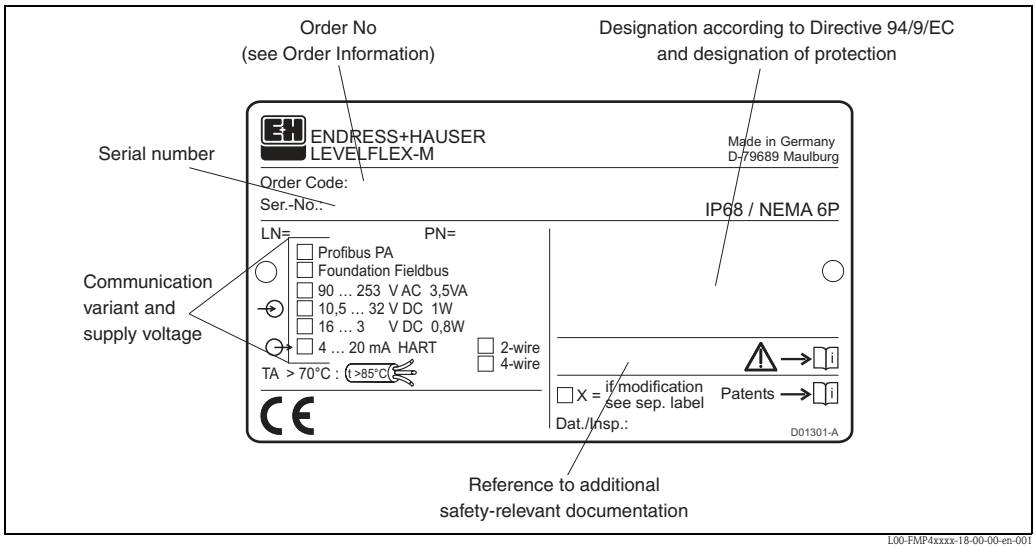

Information on the nameplate of the Levelflex M FMP40

2.1.2 Product structure

This overview does not mark options which are mutually exclusive.

10	Approval:	
	A	Non-hazardous area
	F	Non-hazardous area, WHG
	1	ATEX II 1/2G Ex ia IIC T6/IECEx Zone 0/1
	2	ATEX II 1/2D/IEC Ex td A20/21, Alu blind cover
	3	ATEX II 2G Ex emb (ia) IIC T6/IECEx Zone1
	4	ATEX II 1/3D/IEC Ex td A20/22
	5	ATEX II 1/2G Ex ia IIC T6, ATEX II 1/3D
	6	ATEX II 1/2G Ex ia IIC T6, WHG
	7	ATEX II 1/2G Ex d (ia) IIC T6/ IEC Ex d(ia) IIC T6
	8	ATEX II 1/2G Ex ia IIC T6, ATEX II 1/3D, WHG
	G	ATEX II 3G Ex nA II T6
	C	NEPSI Ex emb (ia) IIC T6
	I	NEPSI Ex ia IIC T6
	J	NEPSI Ex d (ia) IIC T6
	Q	NEPSI DIP
	R	NEPSI Ex nA II T6
	M	FM DIP Cl.II Div.1 Gr. E-G N.I.
	S	FM IS Cl.I,II,III Div.1 Gr. A-G N.I., zone 0, 1, 2
	T	FM XP Cl.I,II,III Div.1 Gr. A-G, zone 1, 2
	N	CSA General Purpose
	P	CSA DIP Cl.II Div.1 Gr. G + coal dust, N.I.
	U	CSA IS Cl.I,II,III Div.1 Gr. A-D, G + coal dust, N.I., zone 0, 1, 2
	V	CSA XP Cl.I,II,III Div.1 Gr. A-D, G + coal dust, N.I., zone 1, 2
	W	IEC Ex td A20/21, Alu blind cover
	X	IEC Ex td A20/22
	K	TIIS Ex ia IIC T4 (in preparation)
	L	TIIS Ex d (ia) IIC T4
	Y	Special version, TSP-No. to be spec.

20								Probe:
	A							Rope 4mm / 1/6", mainly liquid
	B							Rope 6mm / 1/4", solid
	H							Rope 6mm / 1/4", PA > steel, solid, T_{max} = 100°C / 212°F
	P							Rod 6mm, liquid
	1							Rod 12mm, liquid
	K							Rod 16mm, mainly liquid
	L							Coax, liquid
	Y							Special version, TSP-No. to be spec.

30								Probe length:
		A						..... mm, rope 4mm, 316
		B						..... mm, rope 6mm, 316
		C						..... inch rope 1/6", 316
		D						..... inch, rope 1/4", 316
		E						..... mm, rope 6mm, PA > steel
		F						..... inch, rope 1/4", PA > steel
		K						..... mm, rod 16mm, 316L
		L						..... mm, coax, 316L
		M						..... inch, rod 16mm, 316L
		N						..... inch, coax, 316L
		P						..... mm, rod 6mm, 316L
		R						..... inch, rod 6mm, 316L
		S						..... mm, rod 16mm, 316L, 500mm divisible
		T						..... mm, rod 16mm, 316L, 1000mm divisible
		U						..... inch, rod 16mm, 316L, 20in divisible
		V						..... inch, rod 16mm, 316L, 40in divisible
		1						..... mm rod 12mm, AlloyC22
		2						..... mm coax, AlloyC22
		3						..... inch, rod 12mm, AlloyC22
		4						..... inch, coax, AlloyC22
		Y						Special version, TSP-No. to be spec.

40								O-ring Material; Temperature:
			2					Viton; -30...150°C/-22...302°F
			3					EPDM; -40...120°C/-40...248°F
			4					Kalrez; -5...150°C/23...302°F
			9					Special version, TSP-No. to be spec.

50								Process Connection:
				ACJ				1-1/2" 150lbs RF, 316/316L flange ANSI B16.5
				ACM				1-1/2" 150lbs, AlloyC22 >316/316L flange ANSI B16.5
				ADJ				1-1/2" 300lbs RF, 316/316L flange ANSI B16.5
				ADM				1-1/2" 300lbs, AlloyC22 >316/316L flange ANSI B16.5
				AEJ				2" 150lbs RF, 316/316L flange ANSI B16.5
				AEM				2" 150lbs, AlloyC22 >316/316L flange ANSI B16.5
				AFJ				2" 300lbs RF, 316/316L flange ANSI B16.5
				AFM				2" 300lbs, AlloyC22 >316/316L flange ANSI B16.5
				ALJ				3" 150lbs RF, 316/316L flange ANSI B16.5
				ALM				3" 150lbs, AlloyC22 >316/316L flange ANSI B16.5
				AMJ				3" 300lbs RF, 316/316L flange ANSI B16.5
				AMM				3" 300lbs, AlloyC22 >316/316L flange ANSI B16.5
				APJ				4" 150lbs RF, 316/316L flange ANSI B16.5
				APM				4" 150lbs, AlloyC22 >316/316L flange ANSI B16.5
				AQJ				4" 300lbs RF, 316/316L flange ANSI B16.5
				AQM				4" 300lbs, AlloyC22 >316/316L flange ANSI B16.5
				AWJ				6" 150lbs RF, 316/316L flange ANSI B16.5
				AWM				6" 150lbs, AlloyC22 >316/316L flange ANSI B16.5
				A3J				8" 150lbs RF, 316/316L flange ANSI B16.5
				CFJ				DN40 PN25/40 B1, 316L flange EN1092-1 (DIN2527 C)
				CFM				DN40 PN25/40, AlloyC22 >316L flange EN1092-1 (DIN2527)
				CGJ				DN50 PN25/40 B1, 316L flange EN1092-1 (DIN2527 C)
				CGM				DN50 PN25/40, AlloyC22 >316L flange EN1092-1 (DIN2527)
				CMJ				DN80 PN10/16 B1, 316L flange EN1092-1 (DIN2527 C)
				CMM				DN80 PN10/16, AlloyC22 >316L flange EN1092-1 (DIN2527)
				CSJ				DN80 PN25/40 B1, 316L flange EN1092-1 (DIN2527 C)
				CSM				DN80 PN25/40, AlloyC22 >316L flange EN1092-1 (DIN2527)
				CQJ				DN100 PN10/16 B1, 316L flange EN1092-1 (DIN2527 C)
				CQM				DN100 PN10/16, AlloyC22 >316L flange EN1092-1 (DIN2527)
				CTJ				DN100 PN25/40 B1, 316L flange EN1092-1 (DIN2527 C)

50	Process Connection:
CTM	DN100 PN25/40, AlloyC22 >316L flange EN1092-1 (DIN2527)
CWJ	DN150 PN10/16 B1, 316L flange EN1092-1 (DIN2527 C)
CWM	DN150 PN10/16, AlloyC22 >316L flange EN1092-1 (DIN2527)
CXJ	DN200 PN16 B1, 316L flange EN1092-1 (DIN2527 C)
CRJ	Thread ISO228 G3/4, 316L
GRJ	Thread ISO228 G1-1/2, 316L
GRM	Thread ISO228 G1-1/2, AlloyC22
CNJ	Thread ANSI NPT3/4, 316L
GNJ	Thread ANSI NPT1-1/2, 316L
GNM	Thread ANSI NPT1-1/2, AlloyC22
KDJ	10K 40A RF, 316L flange JIS B2220
KDM	10K 40A, AlloyC22 >316L flange JIS B2220
KEJ	10K 50A RF, 316L flange JIS B2220
KEM	10K 50A, AlloyC22 >316L flange JIS B2220
KLJ	10K 80A RF, 316L flange JIS B2220
KLM	10K 80A, AlloyC22 >316L flange JIS B2220
KPJ	10K 100A RF, 316L flange JIS B2220
KPM	10K 100A, AlloyC22 >316L flange JIS B2220
YY9	Special version, TSP-No. to be spec.

60	Power Supply; Output:
B	2-wire; 4-20mA SIL HART
D	2-wire; PROFIBUS PA
F	2-wire; FOUNDATION Fieldbus
K	2-wire; 4-20mA HART, Interface measurement
G	4-wire 90-250VAC; 4-20mA SIL HART
H	4-wire 10.5-32VDC; 4-20mA SIL HART
Y	Special version, TSP-No. to be spec.

70	Operation:
1	W/o display, via communication
2	4-line display VU331, Envelope curve display on site
3	Prepared for FHX40, Remote display (Accessory)
9	Special version, TSP-No. to be spec.

80	Type of Probe:
B	Compact, centering disk d=45mm, 316L, pipe diameter DN50/2"
C	Compact, centering disk d=75mm, 316L, pipe diameter DN80/3" + DN100/4"
D	Spacer, center rod d=45mm, 316L, pipe diameter DN50/2", spacer, 400mm
E	Spacer, center rod d=75mm, 316L,pipe diameter DN80/3" + DN100/4", spacer,400mm
F	Remote, cable 3m, top, center d=45mm, centering disk d=45mm, 316L pipe diameter DN50/2", 316L
G	Remote, cable 3m, top, center d=75mm, centering disk d=75mm, 316L, pipe diameter DN80/3" + DN100/4", 316L
H	Remote, cable 3m, side, center d=45mm, centering disk d=45mm, 316L, pipe diameter DN50/2"
I	Remote, cable 3m, side, center d=75mm, centering disk d=75mm, 316L, pipe diameter DN80/3" + DN100/4"
1	Compact, basic version
2	Spacer, 400mm
3	Remote, cable 3m, top entry
4	Remote, cable 3m, side entry
9	Special version, TSP-No. to be spec.

90	Housing; Cable Entry:
A	F12 Alu, coated IP68; gland M20
B	F12 Alu, coated IP68; thread G1/2
C	F12 Alu, coated IP68; thread NPT1/2
D	F12 Alu, coated IP68; plug M12
E	F12 Alu, coated IP68; plug 7/8"
G	T12 Alu, coated IP68; gland M20 (Ex d > thread M20)
H	T12 Alu, coated IP68; thread G1/2
J	T12 Alu, coated IP68; thread NPT1/2
K	T12 Alu, coated IP68; plug M12
L	T12 Alu, coated IP68; plug 7/8"
M	T12 Alu, coated IP68; gland M20 + OVP[1)]
N	T12 Alu, coated IP68; thread G1/2 + OVP[1)]
P	T12 Alu, coated IP68; thread NPT1/2+OVP[1)]
Q	T12 Alu, coated IP68; plug M12 + OVP[1)]
R	T12 Alu, coated IP68; plug 7/8" + OVP[1)]

90	**Housing; Cable Entry:**	
	1	F23 316L IP68; gland M20
	2	F23 316L IP68; thread G1/2
	3	F23 316L IP68; thread NPT1/2
	4	F23 316L IP68; plug M12
	5	F23 316L IP68; plug 7/8"
	Y	Special version, TSP-No. to be spec.

100	**Additional Option:**	
	A	Basic version
	B	EN10204-3.1 material, wetted parts, (316L wetted parts for rod/coax) inspection certificate
	C	EN10204-3.1 material, pressurized, (316L pressurized for rope version) inspection certificate
	H	5-point lienearity protocol, see additional spec.
	J	5-point, 3.1, NACE, 5-point linearity protocol, see additional spec. EN102043.1 material, NACE MR0175 (316L wetted parts), inspection certificate
	N	EN10204-3.1 material, NACE MR0175 (316L wetted parts) inspection certificate
	S	GL/ABS marine certificate
	Y	Special version, TSP-No. to be spec.

995		**Marking:**
	1	Tagging (TAG), see additional spec.
	2	Bus adress, see additional spec.

FMP40-	Complete product designation

[1] OVP = overvoltage protection

2.2 Scope of delivery

Caution!
It is essential to follow the instructions concerning the unpacking, transport and storage of measuring devices given in the chapter "Incoming acceptance, transport, storage", → 12!

The scope of delivery consists of:
- Assembled device
- Accessories (→ 74)
- Endress+Hauser operating program on the enclosed CD-ROM
- Brief operating instructions KA00189F/00/A2 (basic setup/troubleshooting), housed in the device
- Brief operating instructions KA01038F/00/EN for quick commissioning
- Approval documentation: if this is not included in the operating manual
- CD-ROM with further documentation, e.g.
  - Technical Information
  - Operating Instructions
  - Description of Instrument Functions

2.3 Certificates and approvals

CE mark, declaration of conformity
The device is designed to meet state-of-the-art safety requirements, has been tested and left the factory in a condition in which it is safe to operate. The device complies with the applicable standards and regulations as listed in the EC declaration of conformity and thus complies with the statutory requirements of the EG directives. Endress+Hauser confirms the successful testing of the device by affixing to it the CE mark.

2.4 Registered trademarks

KALREZ®, VITON®, TEFLON®
Registered trademark of the company E.I. Du Pont de Nemours & Co., Wilmington, USA

TRI-CLAMP®
Registered trademark of the company Ladish & Co., Inc., Kenosha, USA

HART®
Registered trademark of HART Communication Foundation, Austin, USA

ToF®
Registered trademark of the company Endress+Hauser GmbH+Co. KG, Maulburg, Germany

PulseMaster®
Registered trademark of the company Endress+Hauser GmbH+Co. KG, Maulburg, Germany

3 Mounting

3.1 Quick installation guide

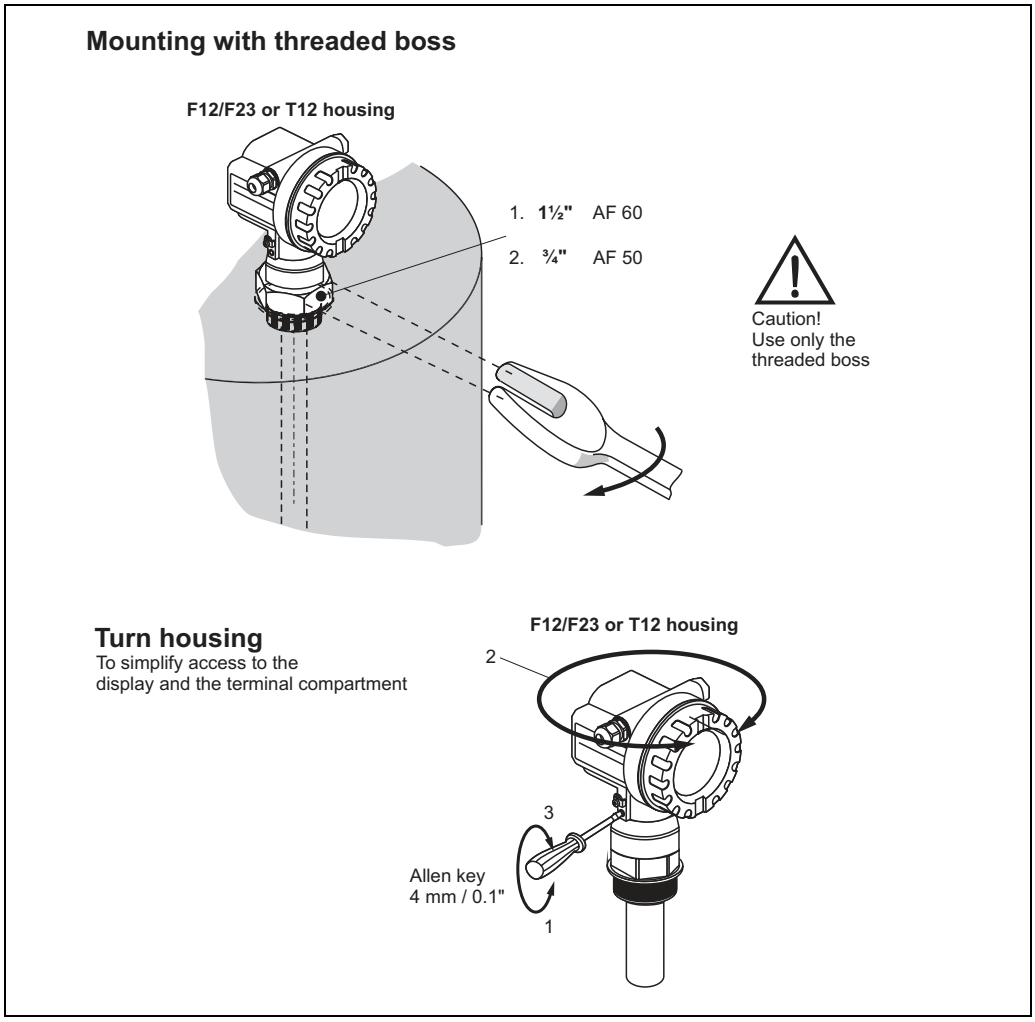

1. When using an aramid fibre seal and a process pressure of 40 bar: 140 Nm
   Maximum permissible torque: 450 Nm
2. When using an aramid fibre seal and a process pressure of 40 bar: 25 Nm
   Maximum permissible torque: 45 Nm

3.2 Incoming acceptance, transport, storage

3.2.1 Incoming acceptance

Check the packing and contents for any signs of damage.
Check the shipment, make sure nothing is missing and that the scope of supply matches your order.

3.2.2 Transport



Caution!
Follow the safety instructions and transport conditions for devices of more than 18 kg.
Do not lift the measuring device by its probe rod in order to transport it.

3.2.3 Storage

Pack the measuring device so that is protected against impacts for storage and transport.
The original packing material provides the optimum protection for this.
The permissible storage temperature is -40 °C to +80 °C.

3.3 Installation conditions

3.3.1 Dimensions

Housing dimensions

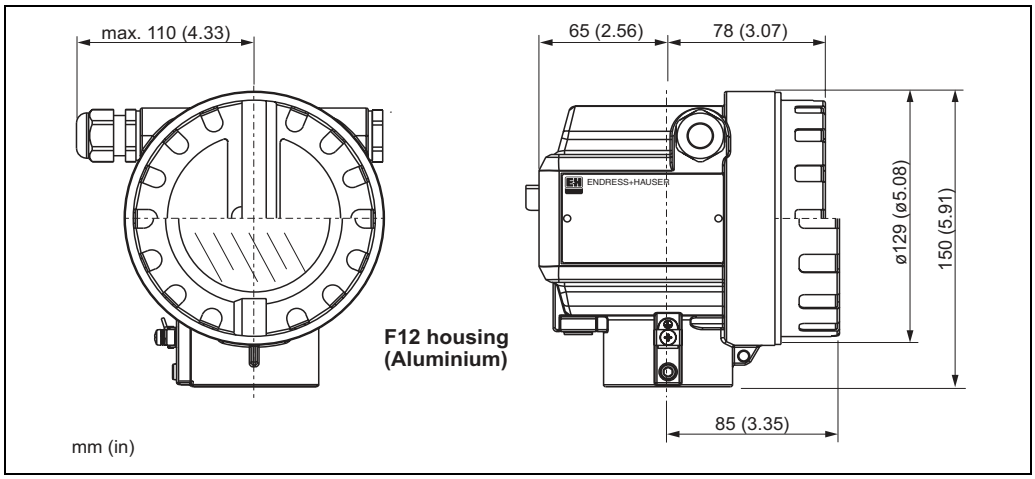

L00-F12xxxx-06-00-00-en-001

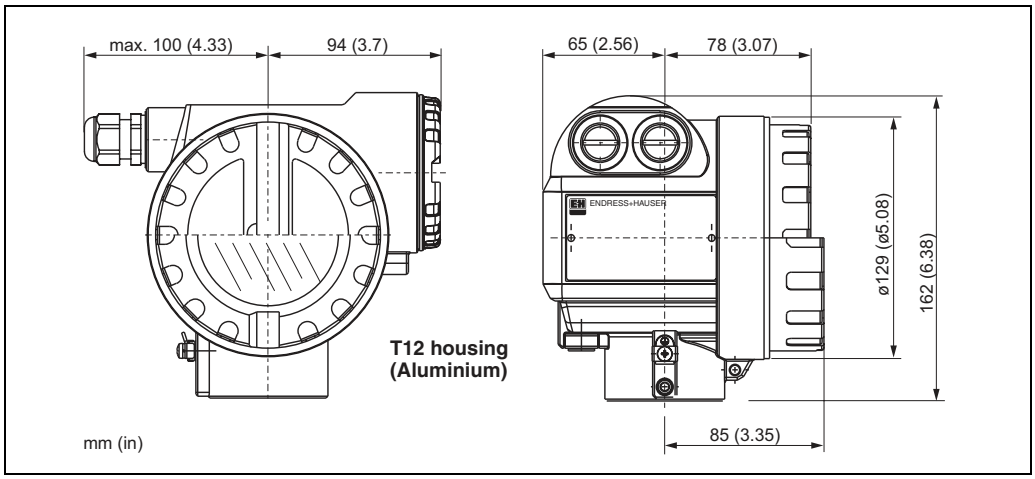

L00-T12xxxx-06-00-00-en-001

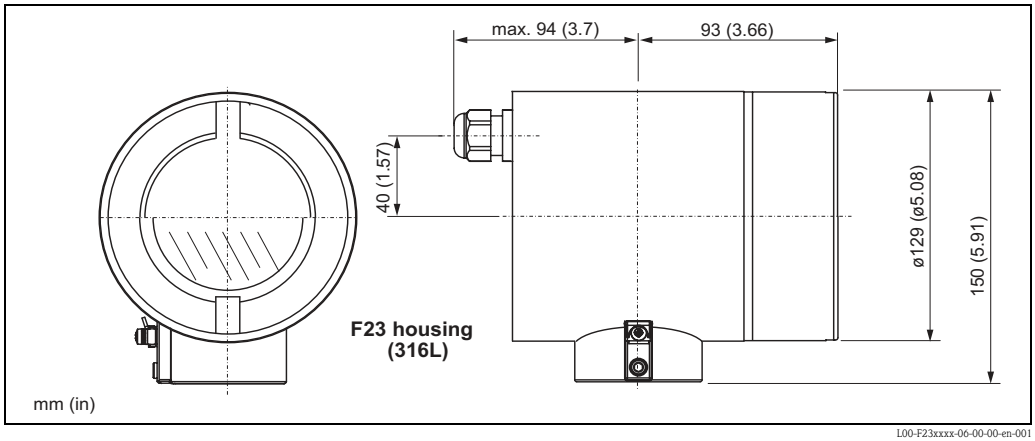

L00-F23xxxx-06-00-00-en-001

Process connection, probe type

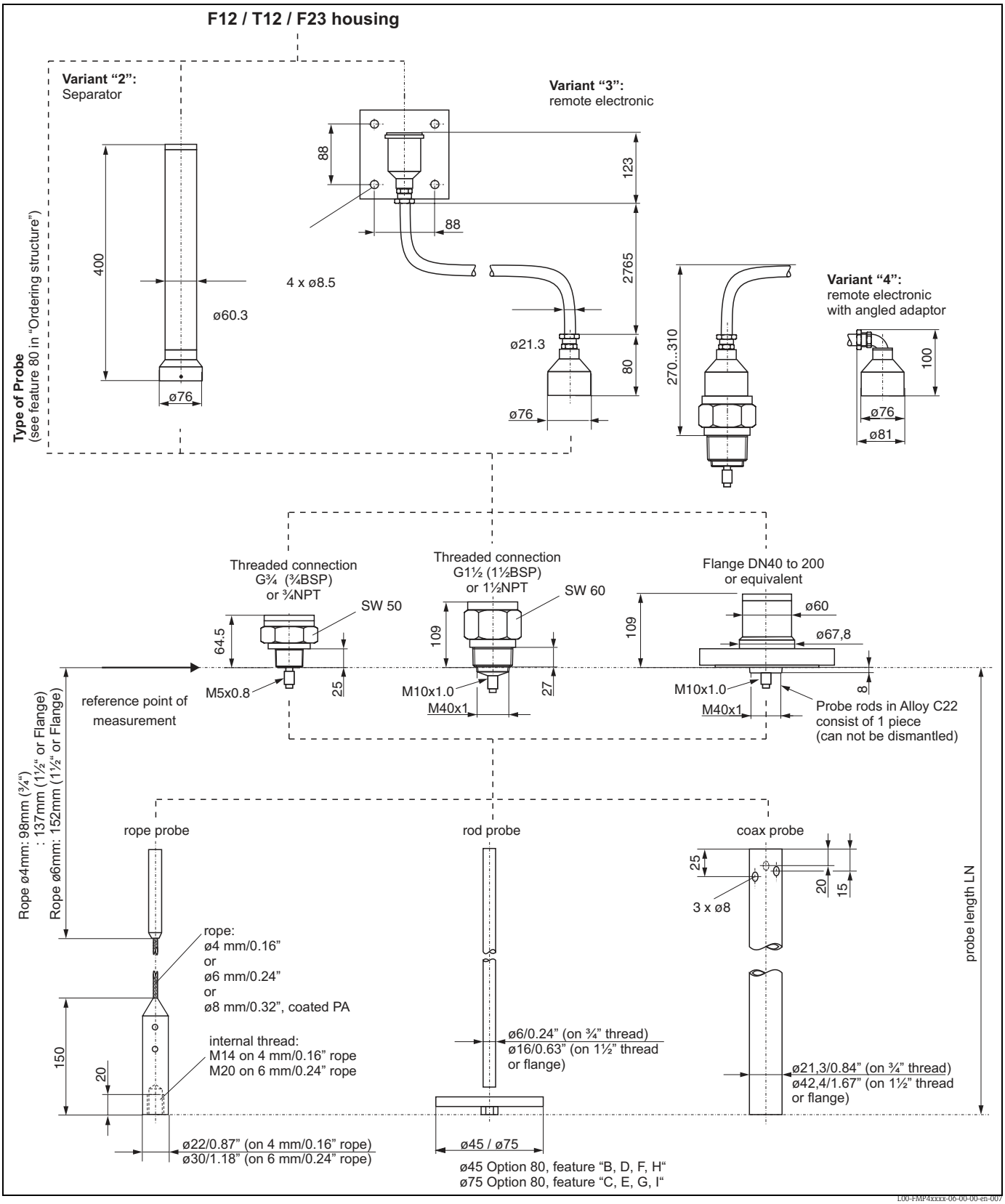

3.4 Installation

3.4.1 Mounting kit

For the mounting, you will require the following tool:
- The tool for flange mounting
- For the mounting of threaded connection:
  60 mm Open-end spanner for 1½", 50 mm Open-end spanner for ¾"
- 4 mm (0.1") Allen wrench for turning the housing

3.4.2 Shortening probes

Note!
When shortening the probe: Enter the new length of probe into the Quick Setup which can be found in the electronics housing under the display module.

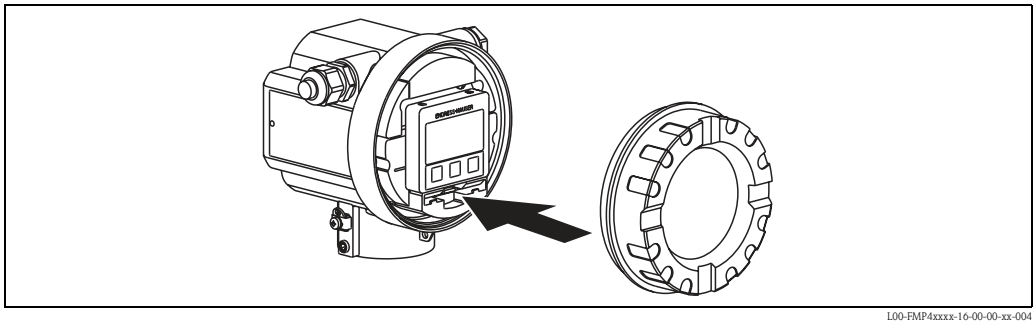

L00-FMP4xxxx-16-00-00-xx-004

Rod probe

The shortening is necessary if the distance to the container floor or outlet cone is less than 50 mm. The rods of a rod probe are shortened by sawing or separating at the bottom end.

Rope probes

The shortening is necessary if the distance to the container floor or outlet cone is less than 150 mm.
- Remove ballast weight:
  The weight is fixed to the probe rope with 3 Allen setscrews (M4, Allen key AF3). The screws are secured with Loctite. This may first have to be made plastic with a hot air apparatus.
- Remove released rope from the weight
- Measure off new rope length
- Wrap adhesive tape around the rope at the point to be shortened to prevent it from fanning out.
- Saw off the rope at a right angle or cut it off with a bolt cutter.
- Insert the rope completely into the weight:
  – 4 mm rope: 60 mm deep
  – 6 mm rope: 80 mm deep

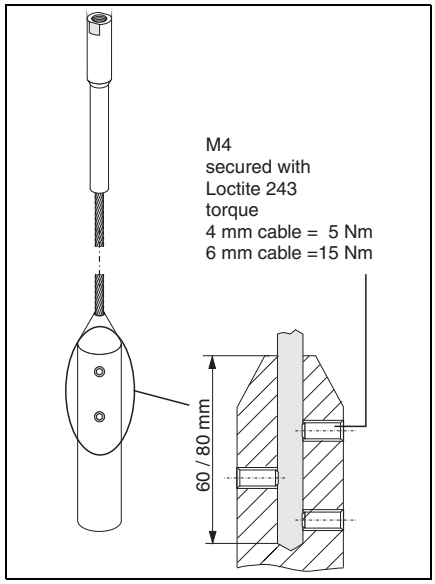

L00-FMP4xxxx-17-00-00-en-044

The weight is then refixed to the rope:
- Reapply screw locking fluid (we recommend Loctite type 243) to the setscrews and screw into place.
- When doing so, observe the following torques:
  – 4 mm rope: 5 Nm
  – 6 mm rope: 15 Nm

Coax probes

The shortening is necessary if the distance to the container floor or outlet cone is less than 10 mm. Coax probes can be shortened max. 80 mm from the end. They have centering units inside which fix the rod centrally in the pipe. The centerings are held with borders on the rod. Shortening is possible up to approx. 10 mm below the centering.

3.4.3 Mounting probes in an empty silo

Caution!
If there is a risk of electrostatic discharge from the product, then both processconnection and rope must be earthed before the probe is lowered into the silo.

Levelflex can be screwed into a threaded socket or flange. Proceed as follows:

Insert probe

- Uncoil rope and lower it slowly and carefully into the silo.
- Do not kink the rope
- Avoid any backlash, since this mightdamage the probe or the silo fittings.

Note!
For flange mounting: if a seal is used, be sure to use unpainted metal bolts toensure good electrical contact betweenprobe flange and process flange.

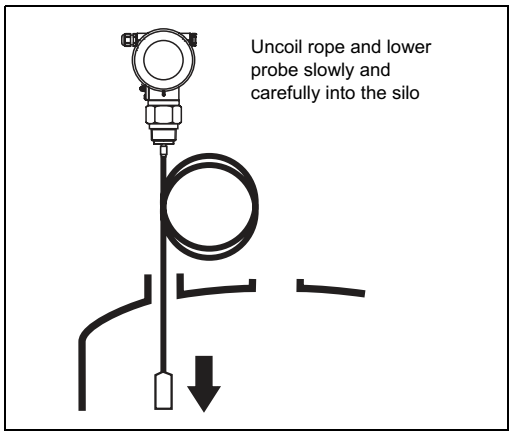

L00-FMP4xxxx-17-00-00-en-056

Screw down

- Screw the Levelflex into the process connection or to flange.
- Maximum permissible torque:
  – G3/4": 45 Nm
  – G1-1/2": 450 Nm
  When using an aramid fibre seal and a process pressure of 40 bar:
  – G3/4": 25 Nm
  – G1-1/2": 140 Nm
- Levelflex functions in metal, concrete and plastic silos. When installing inmetal silos, take care to ensure goodmetallic contact between the processconnection and silo.

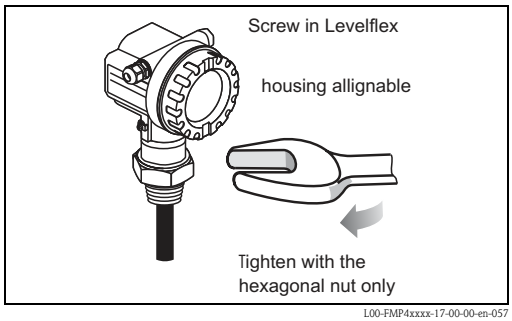

L00-FMP4xxxx-17-00-00-en-057

3.4.4 Mounting rope probes in a partially full silo

It is not always possible to empty a silo which is already in operation. Because the probe can be turned in the threaded boss, it can also be mounted when the silo is only partially filled. In order to avoid problems when Levelflex is mounted into a partially full silo, the following measures should be taken:

- Mount when the silo is as empty as if possible. A minimum of 2/3 of the silo must be empty.

After mounting, map must be made should the installation conditions require it.

Caution!
If there is a risk of electrostatic discharge from the product, the housing must be earthed before the probe is lowered into the silo.

Screw down

- If appropriate, screw the Levelflex into the threaded flange.
- Maximum permissible torque:
  – G3/4": 45 Nm
  – G1-1/2": 450 Nm
  When using an aramid fibre seal and a process pressure of 40 bar:
  – G3/4": 25 Nm
  – G1-1/2": 140 Nm
- For flange mounting: if a seal is used, be sure to use unpainted metal bolts to ensure good electrical contact between probe flange and process flange.
- When installing in metal silos, take care to ensure good metallic contact between the process connection and silo.

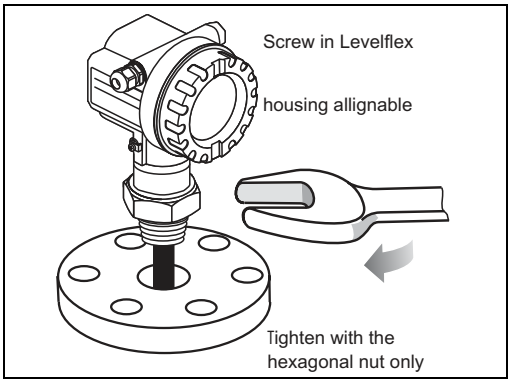

L00-FMP4xxxx-17-00-00-en-058

Insert probe

- Uncoil rope and lower it slowly and carefully into the silo.
- Avoid tangles.
- Avoid any backlash, since this might damage the silo fittings.
- If possible, make a visual check to see that the rope has not tangled or is lying such that it can knot when the level falls.
  This is particularly important if a flange was not used. Re-insert the probe if necessary.
- Screw the flange to the counterflange on the nozzle.

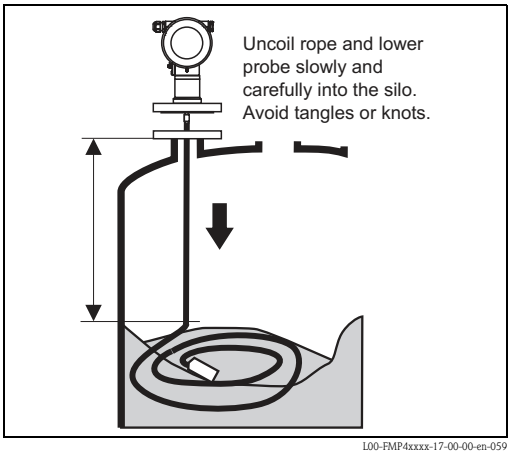

L00-FMP4xxxx-17-00-00-en-059

Note!
Before full accuracy is obtained the probe rope must hang fully extended.

3.4.5 Engineering hints for level measurement in bulk solids and fluids

- Normally, rope probes should be used for bulk solids, rod probes are only suitable for short measuring ranges up to approx. 2 m in bulk solids. This applies above all to applications in which the probe is installed laterally at an angle and for light and pourable bulk solids.
- Normally use rod or coax probes for liquids. Rope probes are used in liquids for measuring ranges > 4 m and with restricted ceiling clearance which does not allow the installation of rigid probes.
- Coax probes are suited to liquids with viscosities of up to approx. 500 cSt.
  Coax probes can measure most liquefied gases, as of dielectric constant 1.4. Moreover, installation conditions, such as nozzles, tank internal fittings etc., have no effect on the measurement when a coax probe is used. A coax probe offers maximum EMC safety when used in plastic tanks.
- In the case of large silos, the lateral pressure on the rope can be so high that a rope with plastic jacketting must be used. We recommend PA-coated ropes be used for cereal products wheat, flour etc.

Mounting location

- Do not mount rod or rope probes in the filling curtain (2).
- Mount rod and rope probes away from the wall (B) at such a distance that, in the event of build-up on the wall, there is still a minimum distance of 100 mm between the probe and the build-up.
- Mount rod and rope probes as far away as possible from installed fittings. "Mapping " must be carried out during commissioning in the event of distances < 300 mm.
- When installing rod and rope probes in plastic containers, the minimum distance of 300 mm also applies to metallic parts outside the container.
- Rod and rope probes may not, at times, contact metallic container walls or floors.
- Minimum distance of probe end to the container floor (C):
  – Rope probe: 150 mm
  – Rod probe: 50 mm
  – Coax probe: 10 mm
- When installing outdoors, it is recommended that you use a protective cover (1) (→ 74, "Accessories").
- Avoid buckling the rope probe during installation or operation (e.g. through product movement against silo wall) by selecting a suitable mounting location.

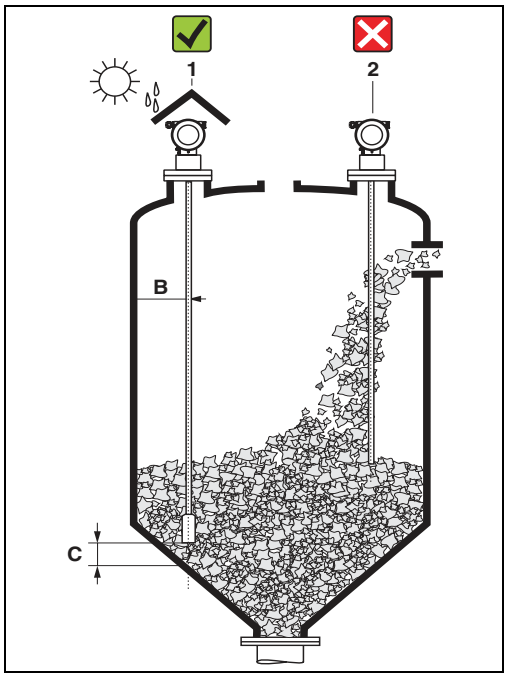

L00-FMP4xxxx-17-00-00-xx-003

Minimum distance B of the probe to the container wall:

Wall	Min. distance B
Metal	100 mm for smooth walls
Plastic	100 mm, min. 300 mm to metallic components outside of the tank
Concrete	0.5 m/20", otherwise the max. possible measuring range is reduced

Distance to protruding internals min. 300 mm.

Other installations

- Select the mounting location such that the distance to internals (5) (e.g. limit switch, struts) is > 300 mm over the entire length of the probe, also during operation.
- Probe must within the measuring span not touch any internals during operation.
  If necessary: when using rope probes the probe end (4) may be fixed to ensure that (→ 📄 27)!

Optimization options

Interference echo suppression: Measurement can be optimised by electronically tuning out interference echoes.

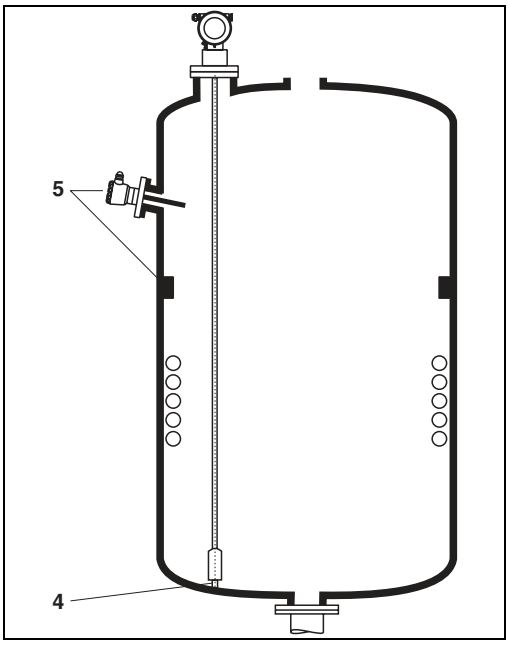

L00-FMP4xxxx-17-00-00-xx-037

Separable probes

If there is little mounting space (distance to the ceiling), it is advisable to use separable rod probes (∅16 mm).

- max. probe length 10 m (394 in)
- max. sideways capacity 20 Nm
- probes are separable several times with the lengths:
  – 500 mm (19.68 in)
  – 1000 mm (39.37 in)
- torque: 15 Nm

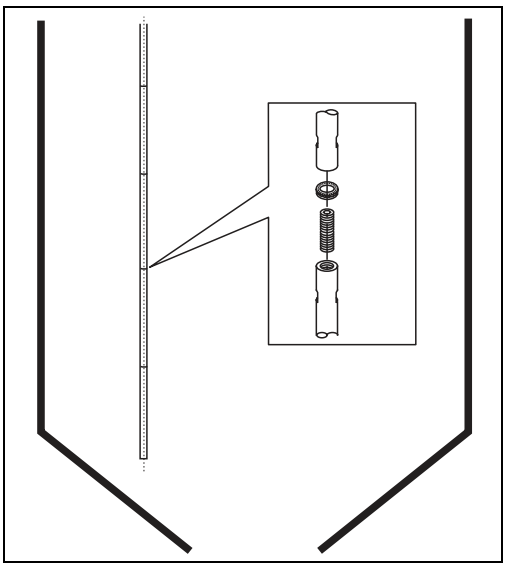
L00-FMP4xxxx-17-00-00-xx-015

Centering of probe end

If the centering disk is mounted at the end of the probe, it enables a reliable measuring.
See "Product structure", → 📄 6.

Centering disk for rod probes:
- d = 45 mm (DN50 (2"))
- d = 75 mm (DN80 (3") + DN100 (4"))

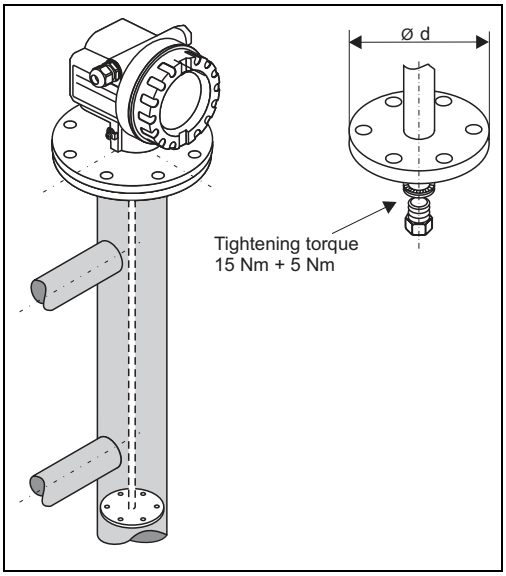

L00-FMP4xxxx-17-00-00-en-068

Type of probe installation

- Probes are mounted to the process connection with threaded connections or flanges and are usually also secured with these. If during this installation there is the danger that the probe end moves so much that it touches the tank floor or cone at times, the probe must, if necessary, be shortened and fixed down. The easiest way to fix the rope probes is to screw them to the internal thread on the lower end of the weight (Thread size, → 27).
- The ideal installation is mounting in a screwed joint / screw-in sleeve which is internally flush with the container ceiling.
- If installation takes place in a nozzle, the nozzle should be 50 to 150 mm in diameter and should not be more than 150 mm high. Installation adapters are available for other dimensions, → 74.

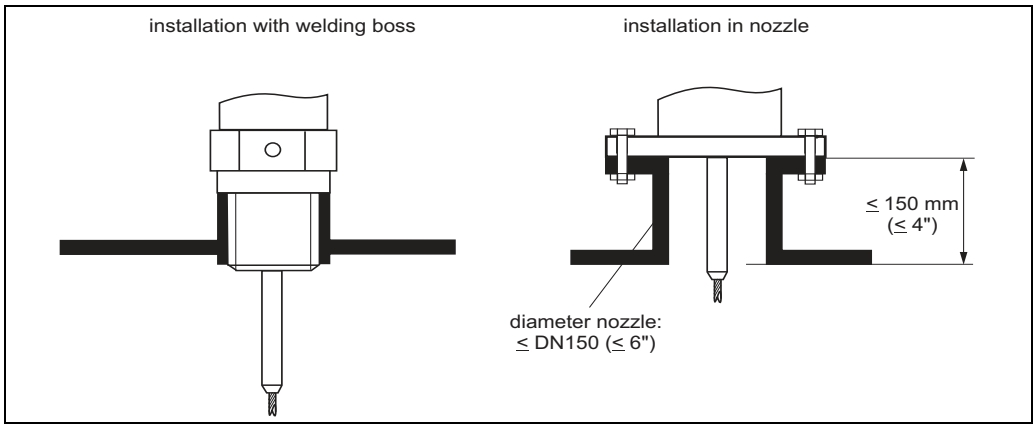

Welding the probe into the vessel

Caution!
Before welding the probe into the vessel, it must be grounded by a low-resistive connection. If this is not possible, the electronics as well as the HF module must be disconnected. Otherwise the electronics may be damaged.

Supporting probes against warping

For WHG approval:
For probe lengths ≥ 3 m a support is required (see figure).

For GL/ABS approval:
Rod probes ∅ 16 mm ≤ 1 m permissible, Rod probes ∅ 6 mm not permissible.
For coax probes ≥ 1 m a support is required (see figure).

a. Rod probes

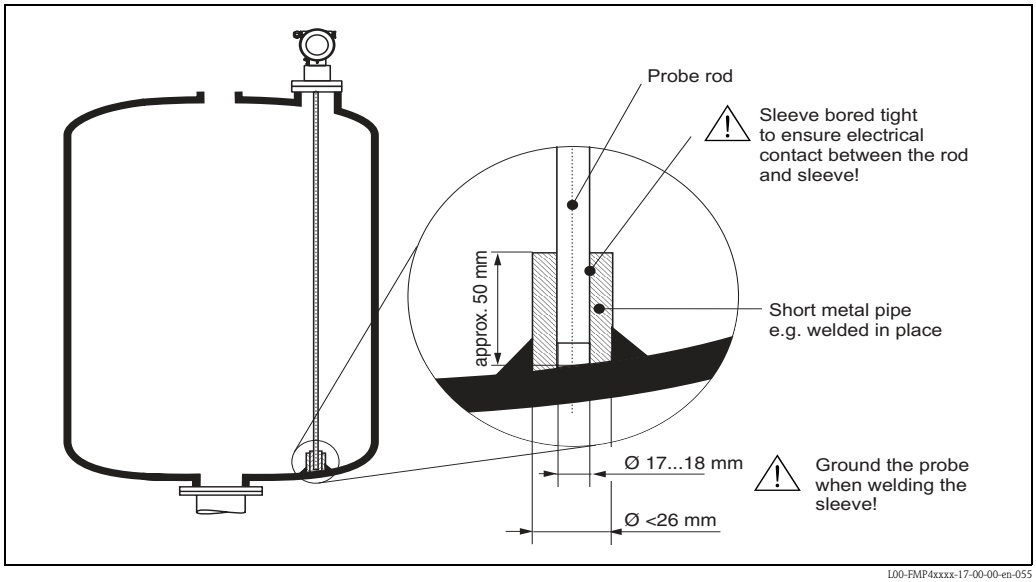

b. Coax probes

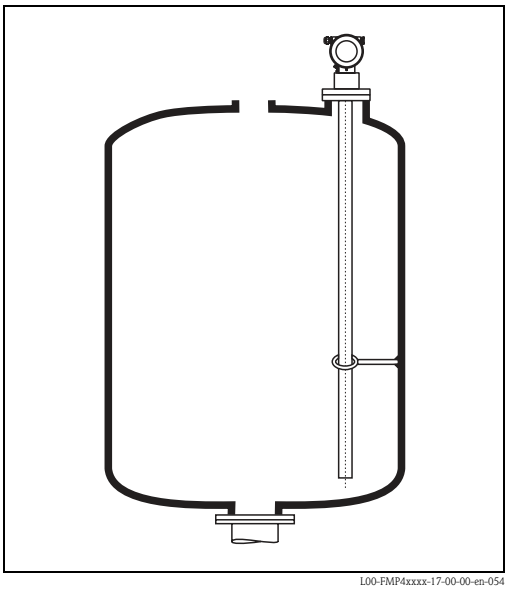

3.4.6 Special notes for bulk solids

- In the case of bulk solids, as great a distance as possible from the filling curtain is especially important to avoid wear.
- In concrete silos, a **large distance** (B) should be observed between the probe and the concrete wall, if possible ≥ 1 m, but at least 0.5 m
- The installation of rope probes must be carried out carefully. If possible, installation should be carried out when the silo is empty.
- Check the probe regularly for defect.

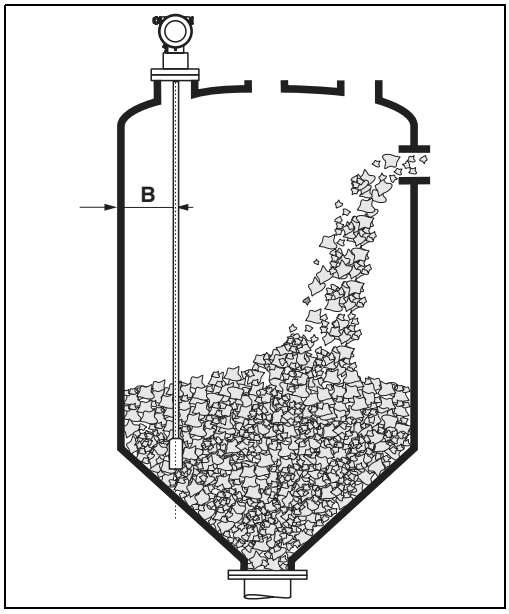

L00-FMP4xxxx-17-00-00-xx-005

Installation in concrete silos

Installation, for example, into a thick concrete ceiling should be made flush with the lower edge. Alternatively, the probe can also be installed into a pipe that must not protrude over the lower edge of the silo ceiling. The pipe should kept at a minimum length. Installation suggestions see diagram.

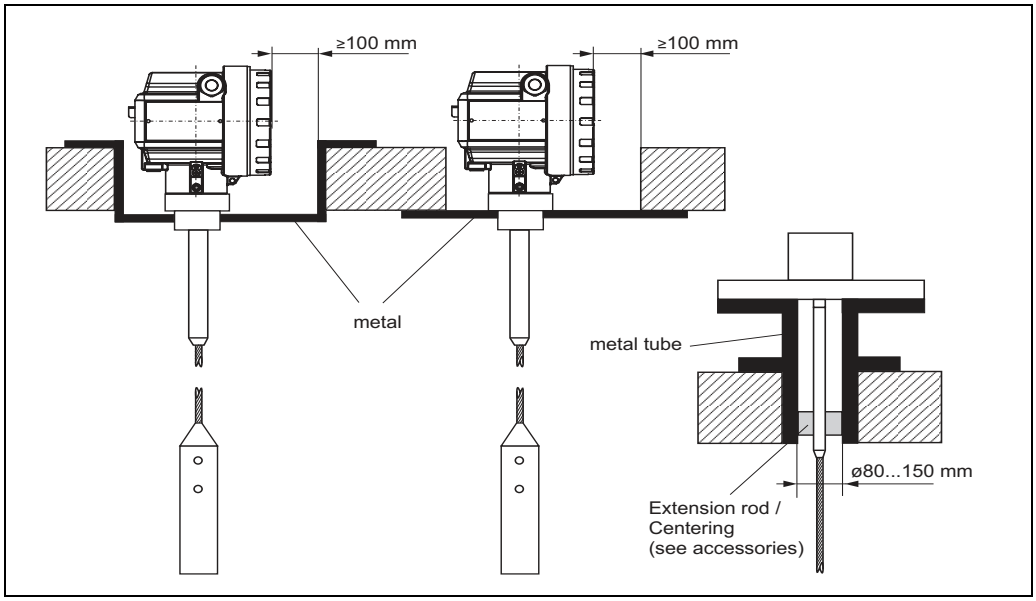

L00-FMP4xxxx-17-00-00-en-008

Strong dust generation can lead to build-up behinde the center washer. This can cause an interference signal. For other installation possibilities please contact Endress+Hauser.

3.4.7 Installation in bulk solid silos

Tensile load

Bulk solids exert tensile forces on rope probes whose height increases with:
- the length of the probe, i.e. max. cover,
- the bulk density of the product,
- the silo diameter
- the diameter of the probe rope

The following diagrams show typical loads for frequently occurring bulk solids as reference values. The calculation is performed for the following conditions:
- Suspended probe (probe end not fixed at the bottom)
- Free-flowing bulk solid, i.e. mass flow. A calculation for core flow is not possible. In the event of collapsing cornices, considerably higher loads can occur.
- The specification for tensile forces contains the safety factor 2, which compensates for the normal fluctuation range in pourable bulk solids.

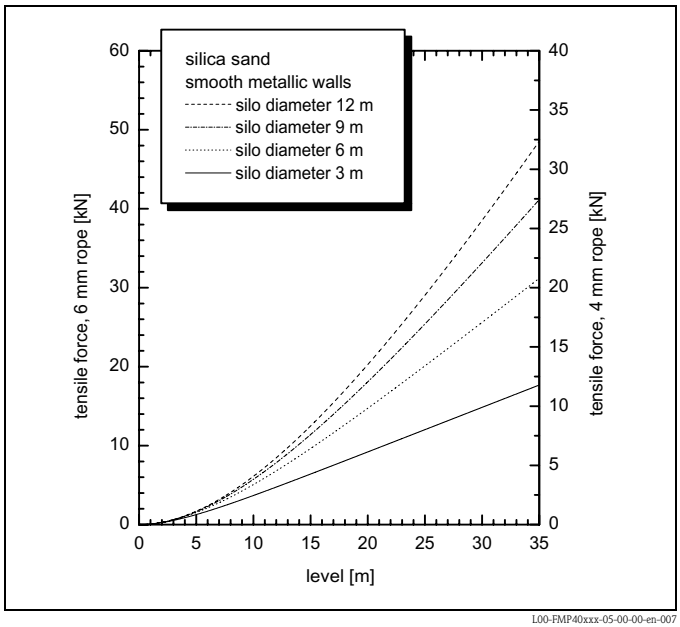

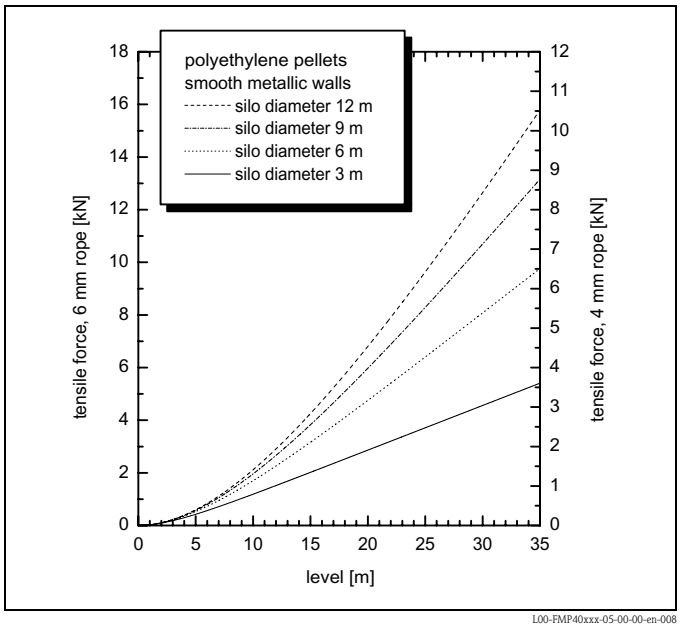

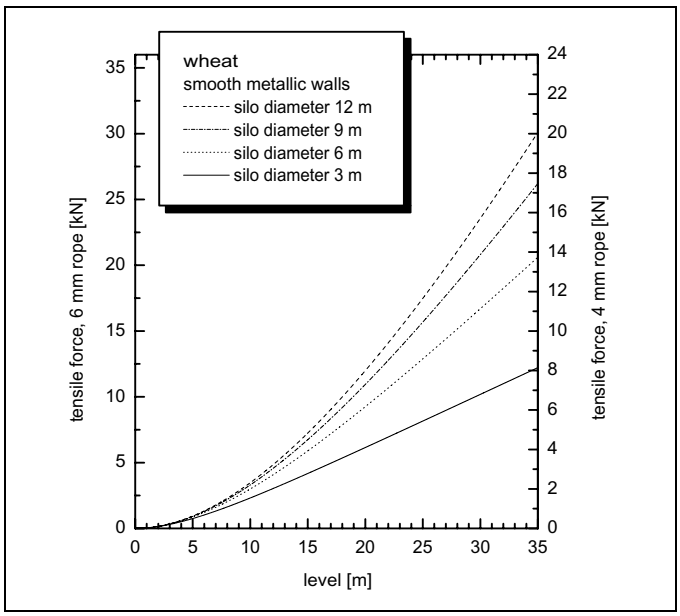

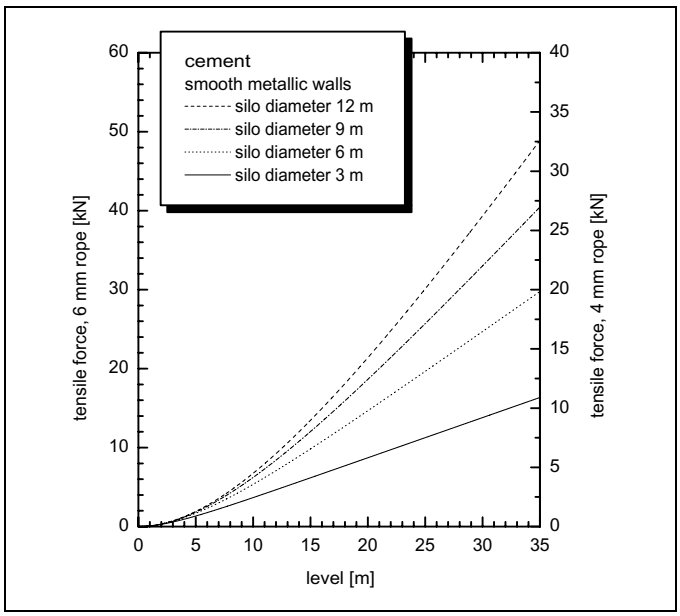

Since the tensile forces are also heavily dependent on the viscosity of the product, a higher safety factor is necessary for highly viscous products and if there is a risk of cornice build-up.
In critical cases it is better to use a 6 mm rope instead of a 4 mm one.

The same forces also act on the silo cover.
On a fixed rope, the tensile forces are definitely greater, but this can not be calculated.Observe the tensile strength of the probes or ensure that the tensile strength of the probes is not exceeded.

Options for reducing the tensile forces:
- Shorten the probe
- If the maximum tensile load is exceeded, check whether it would be possible to use a non-contact Ultrasonic or Level-Radar device.

3.4.8 Installation in liquid tanks

- When installing in agitation units, check whether a no-contact process (ultrasonic or radar) would be better suited, especially if the agitator generates large mechanical loads on the probe.
- If Levelflex is, nevertheless, installed in tanks with agitators, it is better to use coax probes which have a greater lateral loading capacity.

Standard installation

Using a coax probe offers great advantages when the viscosity of the product is ≤ 500 cSt and it is certain that the product does not accumulate build-up:
- Greater reliability:
  As of dielectric constant = 1.4, measurement functions independently of all electrical properties in all liquids.
- Internals in the tank and nozzle dimensions do not have any influence on measurement.
- Higher lateral load-bearing capacity than rod probes.
- For higher viscosity a rod probe is recommended, or using a non-contact measuring principle with the Level-Radar Micropilot M.

Installation in horizontal and upright cylindrical tanks

- Use the following types of probe for measuring ranges
  – up to 4 m (13 ft): rod probe (1) or coax probe (2)
  – up to 10 m (33 ft): separable probe
  – above 10 m (33 ft): 4 mm rope probe
- Installation and possible fixing as with bulk solids.
- Any distance from wall, as long as occasional contact is prevented.
- When installing in tanks with a lot of internals or internals situated close to the probe:
  Use a coax probe.

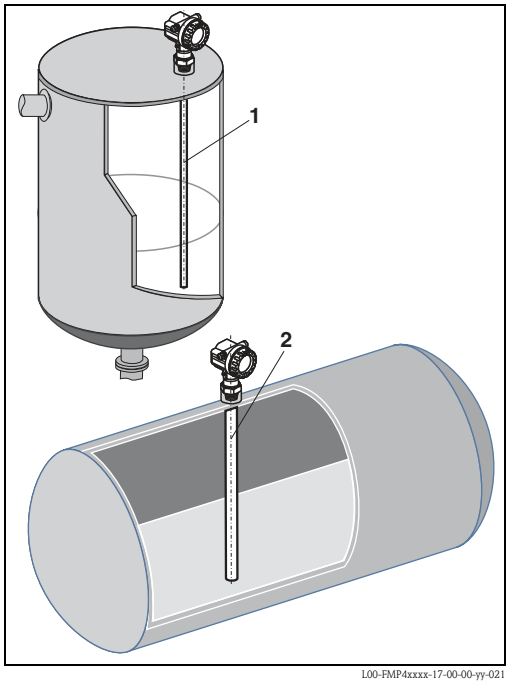

L00-FMP4xxxx-17-00-00-yy-021

Installation in underground tanks
Use coax probe for nozzles with large diameters in order to avoid reflections at the nozzle wall.

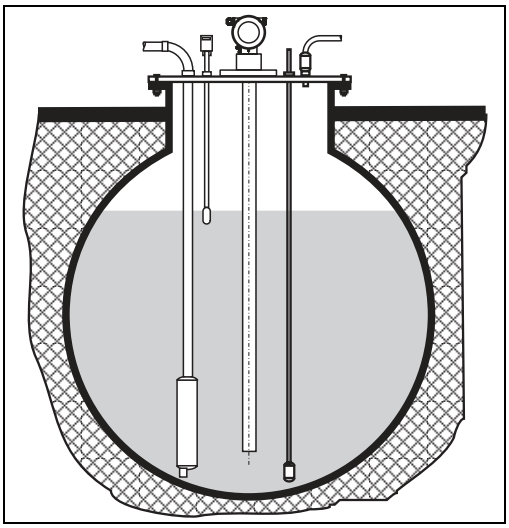
L00-FMP4xxxx-17-00-00-yy-022

Measurement in corrosive fluids

For measurement in corrosive liquids use Levelflex M FMP41C. When using plastic tanks it is also possible to mount the probe on the outside of the tank (Installation instructions, → 28). Levelflex measures the level through the plastic in both cases.

Installation in stilling well or bypass
- A rod probe can be used for pipe diameters bigger than 40 mm.
- When installing a rod probe into a metallic pipe with internal diameter of up to 150 mm, you have all the advantages of a coax probe.
- Welded joints that protrude up to approx. 5 mm (0.2") inwards do not influence measurement.
- If a rod probe is used, the probe length must be 100 mm longer than the lower disposal.
- It must be ensured that the probe does not come into contact with the side wall. Where necessary, use a centering disk at the lower end of the probe ("Type of Probe:", → 8)

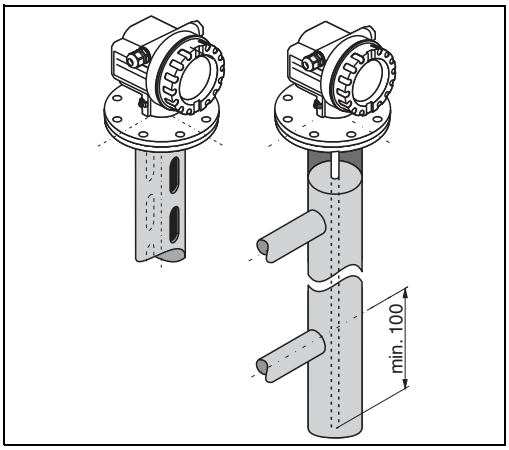

L00-FMP4xxxx-17-00-00-yy-023

Mounting Location

- Recommended distance B wall-mounted rope probe: ~1/6 to 1/4 of the container diameter.
- Not central (2) in metallic tanks.
- Not in the filling curtain (3).
- Please order the probe length such that it ends approx 30 mm above the floor of the tank.
- Temperature conditions must be met.
- It is recommended that a protective cover (1) be used, in order to protect the transmitter against direct sunlight or rain. Mounting and demounting are carried out simply with a clamp ("Accessories", → 78).

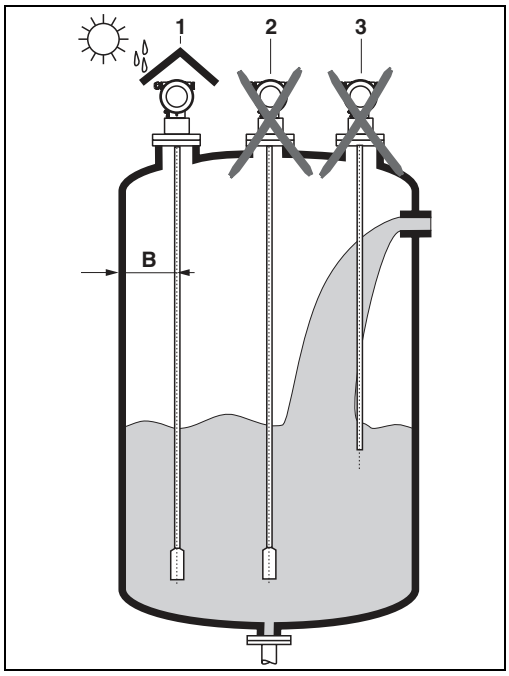

L00-FMP4xxxx-17-00-00-xx-001

Tank installations

Select the mounting location such that the distance to internals (4) (e.g. limit switch, struts) is > 300 mm.

Optimization options

- Interference echo suppression: Measurement can be optimised by electronically tuning out interference echoes.
- Bypass pipe and stilling well (only for liquids): for viscosities of up to 500 cSt, a bypass pipe, stilling well or a coax probe can be used to prevent interference.

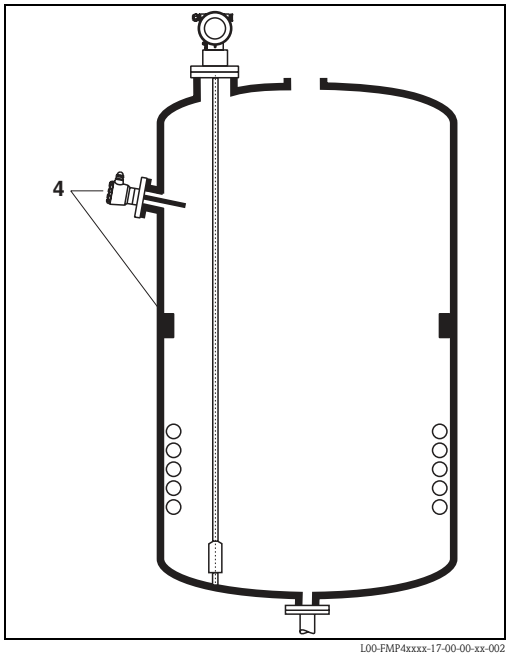

L00-FMP4xxxx-17-00-00-xx-002

3.4.9 Notes on special installation situations

Welding the probe into the vessel

Caution!
Before welding the probe into the vessel, it must be grounded by a low-resistive connection.
If this is not possible, the electronics as well as the HF module must be disconnected. Otherwise the electronics may be damaged.

Fixing rope probe

- The end of the probe needs to be secured if the probe would otherwise touch the silo wall, the cone or another part, or the probe comes closer than 0.5 m to a concrete wall. This is what the internal thread in the probe weight is intended for:
  – 4 mm rope: M14
  – 6 mm rope: M20
- Preferably use the 6 mm rope probe due to the higher tensile strength when fixing a rope probe.
- The fixing must be either reliably grounded or reliably insulated ("Accessories", → 📄 80)! If it is not possible to mount the probe weight with a safe earthed connection, it can be secured using an isolated eyelet, which is available as an accessory (→ 📄 80).
- In order to prevent an extremely high tensile load and the risk of rope crack, the rope has to be slack. Make the rope longer than the required measuring range such that there is a sag in the middle of the rope that is ≥ 1cm/m of the rope length.

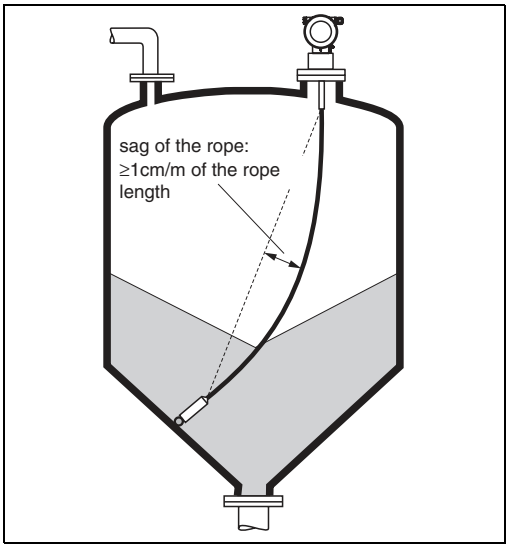

L00-FMP4xxxx-17-00-00-de-019

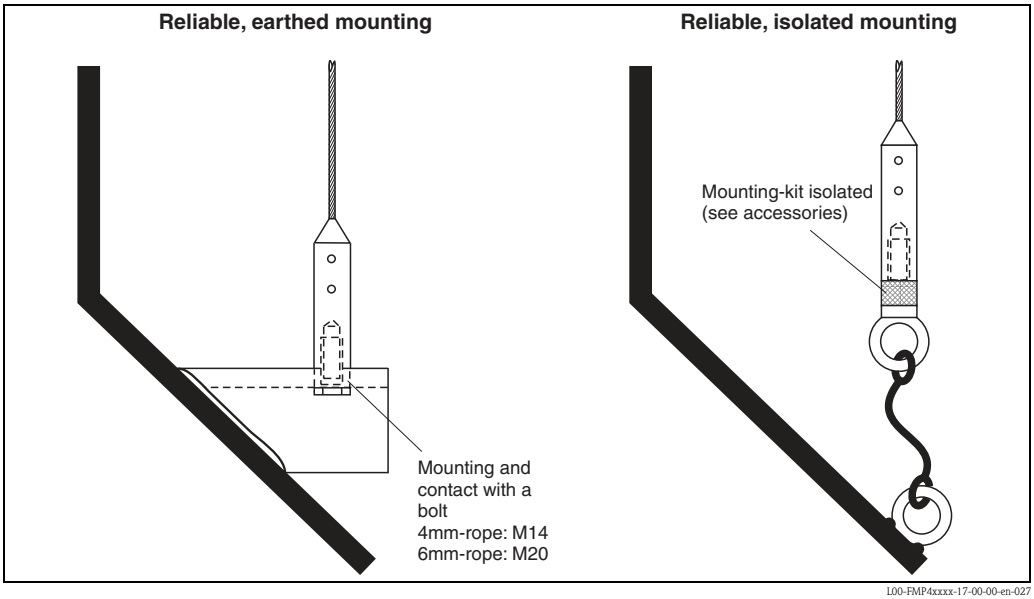

L00-FMP4xxxx-17-00-00-en-027

Installation from the side

- If installation from above is not possible, the Levelflex can also be mounted from the side.
- In this case, always fix the rope probe (see "Fixing rope probe").
- Support coax probe if the lateral load-bearing capacity is exceeded. Only fix rod probes at the probe end.
- Connect rod probe metallically with the container wall.

☝ Caution!
Remove or ground the electronics when welding the sleeve as the device will otherwise be destroyed!

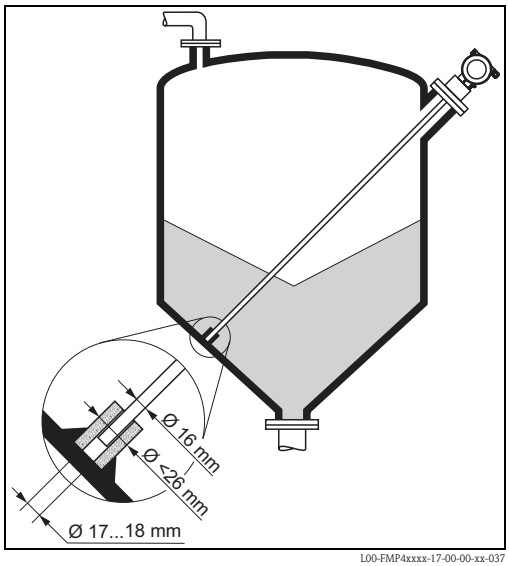

L00-FMP4xxxx-17-00-00-xx-037

Installation in plastic containers

Please note that the "guided level radar" measuring principle requires a metallic surface at the process connection! When installing rod or robe probes in plastic silos, whose silo cover is also made of plastic or silos with wood cover, the probes must either be mounted in a ≥ DN50 (2") metallic flange, or a metal sheet with diameter of ≥ 200 mm must be mounted under the screw-in piece.

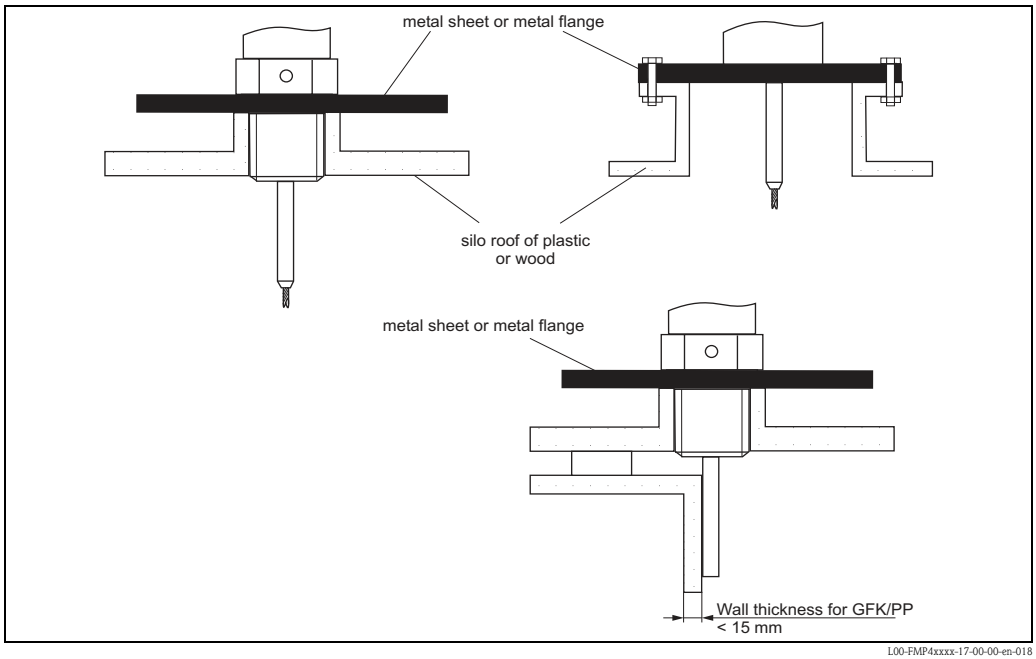

L00-FMP4xxxx-17-00-00-en-018

- It is also possible to mount the probe externally on the tank wall for measuring in Aqueous solutions. Measurement then takes place through the tank wall without contacting the medium. If people are in the vicinity of the probe mounting location, a plastic half pipe with a diameter of approx. 200 mm, or some other protective unit, must be affixed externally to the probe to prevent any influences on the measurement.
- There must not be any metallic reinforcement rings secured to the tank.
- The wall thickness should be at Fibre-Glass Reinforced Plastic/PP < 15 mm.
- There must be no open space between the tank wall and the probe.
- If measuring externally, an automatic probe length determination and a two point linearisation must be performed in order to compensate for the time-of-flight change caused by the plastic wall.

Installation in nozzles > 150 mm high

If, when installing probes in nozzles DN40 (1½") to DN250 (10") with nozzle height of > 150 mm (6"), the probe could touch the lower edge due to moving materials in the container, we recommend using an extension rod with or without centering disk.
This accessory consists of the extension rod corresponding to the nozzle height, on which a centering disk is also mounted if the nozzles are narrow or when working in bulk solids.
This component is delivered separately from the device. Please order the probe length correspondingly shorter. For the exact length of the rod see "Extension rod / Centering", → 📄 74. Order codes for specific nozzle nominal diameters and heights can be found on → 📄 79. Only use centering disks with small diameters (DN40 and DN50) if there is no significant build-up in the nozzle above the disk.

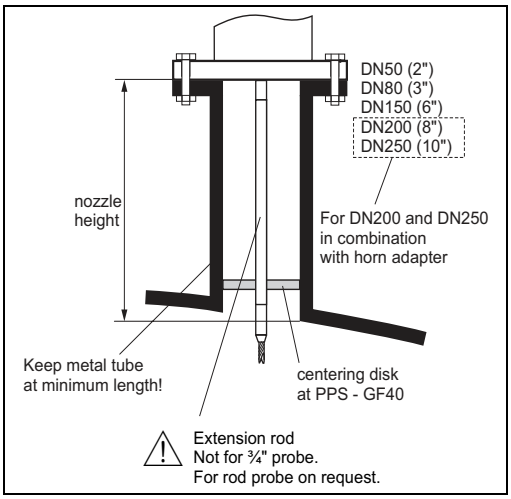

L00-FMP4xxxxx-17-00-00-en-025

Installation in DN200 (8") and DN250 (10") nozzles

When installing the Levelflex in nozzles of > 200 mm (8"), signals are generated by reflections on the nozzle wall, which can sometimes lead to faulty measurements in the case of products with small dielectric constants. With nozzle diameters of 200 mm (8") or 250 mm (10"), therefore, a special flange with a "horn adaptor" must be fitted.
Nozzles with nominal diameters greater than DN250 (10") should be avoided.
If the rope probe is strongly deflected: use an extension rod/centering HMP40, additionaly.

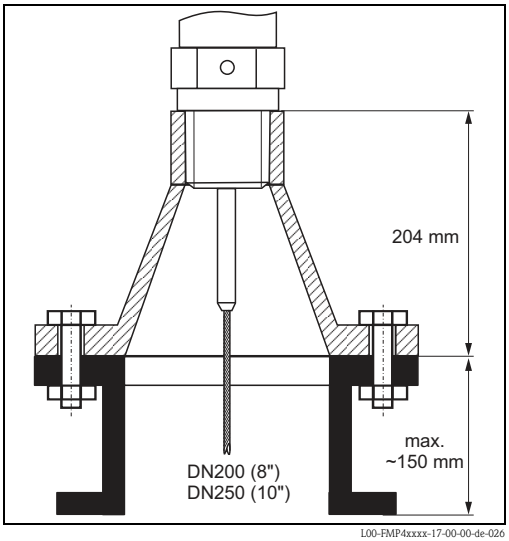

L00-FMP4xxxxx-17-00-00-de-026

Installation in ≥ DN300 (12") nozzles
If installation in ≥ 300 mm (12") nozzles is unavoidable, installation must be carried out in accordance with the sketch on the right.

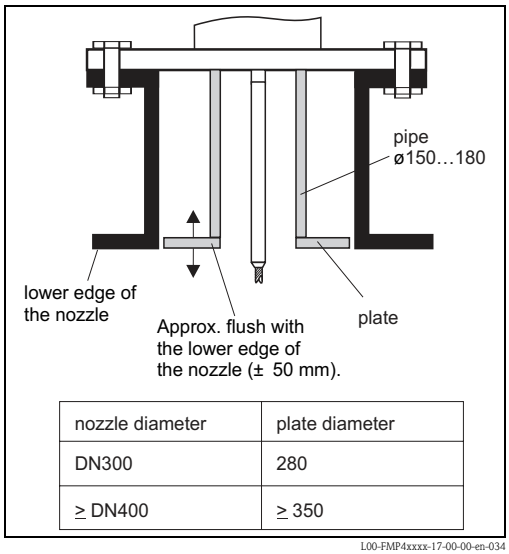

nozzle diameter	plate diameter
DN300	280
≥ DN400	≥ 350

L00-FMP4xxxx-17-00-00-en-034

Installing FMP40 with heat insulation

- If process temperatures are high, FMP40 must be included in normal tank insulation to prevent the electronics heating up as a result of heat radiation or convection.
- The insulation may not exceed beyond the points labelled "**MAX**" in the drawing.

Process connection with adapter G¾, G1½, ¾NPT or 1½NPT

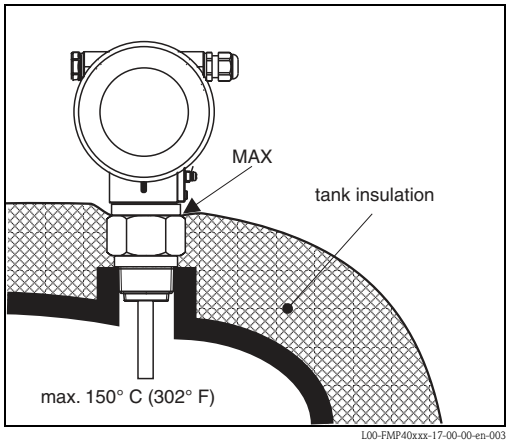

L00-FMP40xxx-17-00-00-en-003

Process connection with flange DN40 to DN200

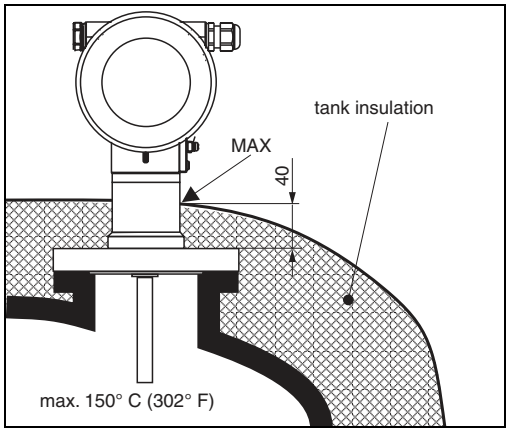

L00-FMP40xxx-17-00-00-en-002

Installation at an angle

- For mechanical reasons, the probe should be installed as vertically as possible.
- With inclined installations the probe length has to be adjusted in dependence to the installation angle.
  – up to 1 m = 30°
  – up to 2 m = 10°
  – up to 4 m = 5°

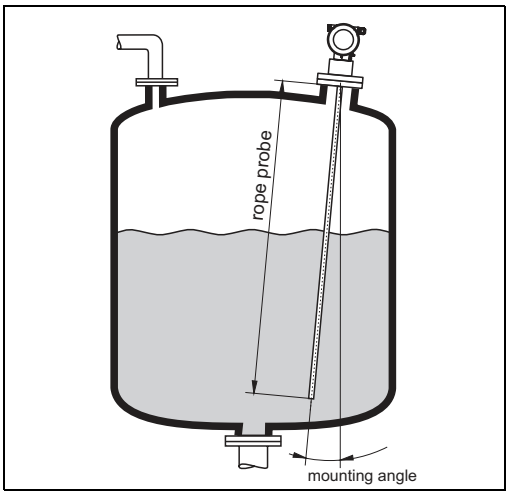

L00-FMP4xlxx-17-00-00-en-048

Installation for difficult to access process connections

For tight spaces or temperatures above that in the graphic, the electronics housing can be ordered with distance pipe or connecting cable (seperate housing).

Installation with distance pipe

When installing, please observe the installation instructions (→ 🖹 18) and the following points:

- After mounting, the housing can be turned 350°, in order make access to the display and the connection compartment easier.
- The max. measuring range is reduced to 34 m.

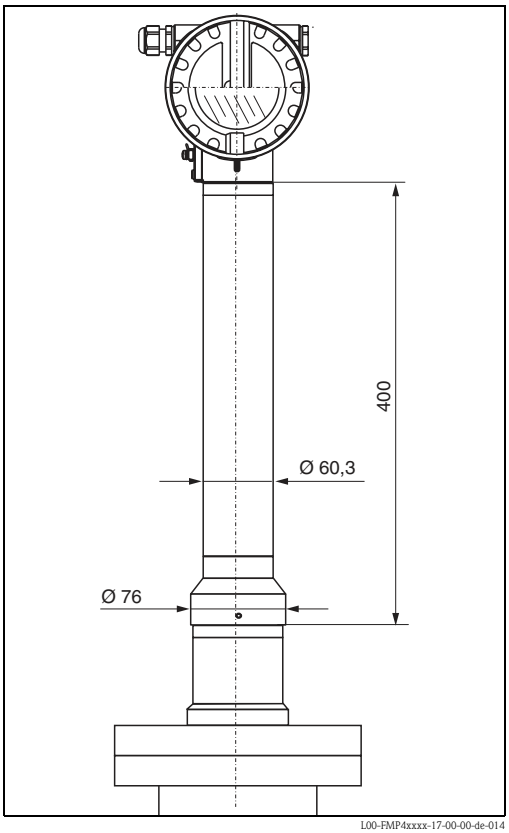

L00-FMP4xxxx-17-00-00-de-014

Installation with remote electronic

- Wall and pipe bracket is contained in the scope of delivery and already mounted.
- Follow installation instructions, → 18
- Mount housing on a wall or pipe as shown in the diagram.

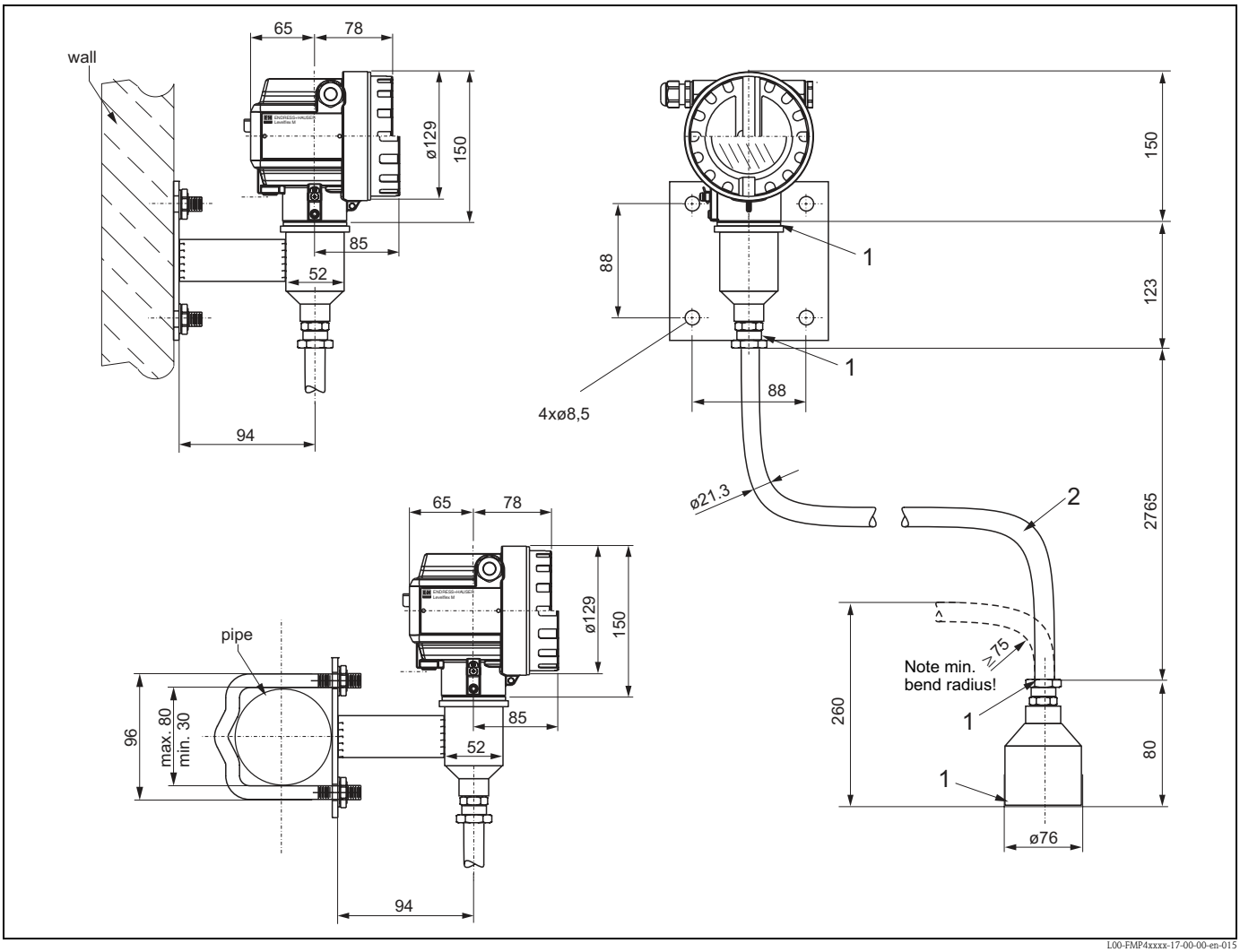

Note!
The protective hose cannot be disassembled at these points (1).

The ambient temperature for the connecting line (2) between the probe and the electronics must not be greater than 105 °C. The version with remote electronics consists of the probe, a connecting cable and the housing. If they are ordered as a complete unit they will be delivered assembled and cannot be separated.

3.4.10 Turn housing

After mounting, the housing can be turned 350° in order to simplify access to the display and the terminal compartment. Proceed as follows to turn the housing to the required position:
- Undo the fixing screws (1)
- Turn the housing (2) in the required direction
- Tighten up the fixing screws (1)

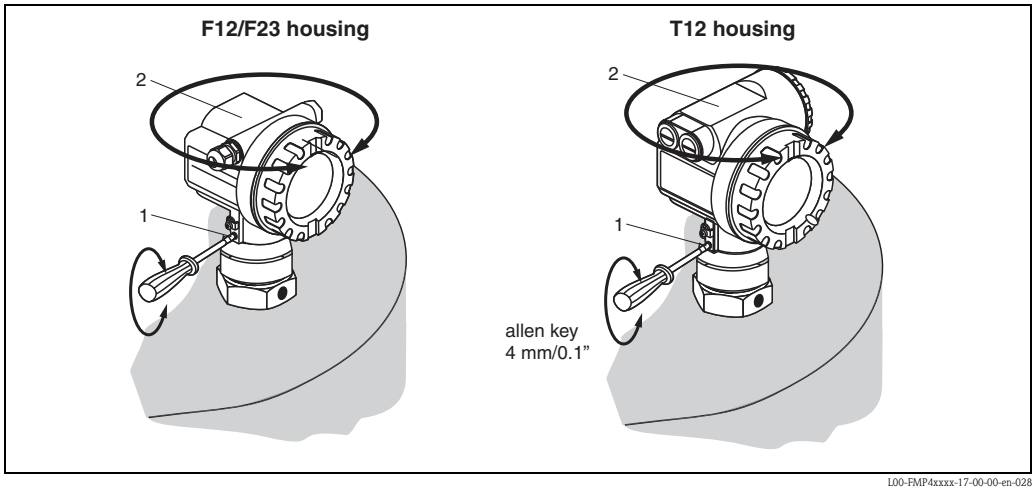

3.5 Post-installation check

After the measuring device has been installed, perform the following checks:
- Is the measuring device damaged (visual check)?
- Does the measuring device correspond to the measuring point specifications such as process temperature/pressure, ambient temperature, measuring range, etc.?
- Are the measuring point number and labeling correct (visual check)?
- Is the measuring device adequately protected against rain and direct sunlight (→ 74)?

4 Wiring

4.1 Quick wiring guide

Wiring in F12/F23 housing

Caution!

Before connection please note the following:

- The power supply must be identical to the data on the nameplate (1).
- Switch off power supply before connecting up the device.
- Connect Equipotential bonding to transmitter ground terminal (7) before connecting up the device.
- Tighten the locking screw (8):
  It forms the connection between the probe and the housing ground potential.

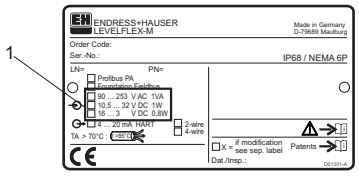

When you use the measuring system in hazardous areas, make sure you comply with national standards and the specifications in the safety instructions (XA's).
Make sure you use the specific cable gland.

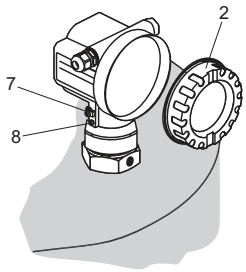

EX

On devices supplied with a certificate, the explosion protection is designed as follows:

- Housing F12 - Ex ia:
  Power supply must be intrinsically safe.
- The electronics and the current output are galvanically separated from the probe circuit.

Connect up the Levelflex M as follows:

Unplug display connector!

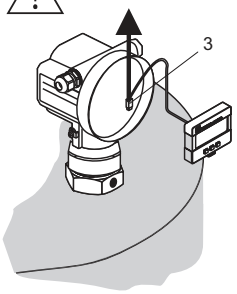

- Unscrew housing cover (2).
- Remove any display (3) if fitted.
- Remove cover plate from terminal compartment (4).
- Pull out terminal module slightly using "pulling loop" (only 2-wire).
- Insert cable (5) through gland (6).
  A standard installation cable is sufficient if only the analogue signal is used. Use a screened cable when working with a superimposed communications signal (HART).

EX

Only ground screening of the line (7) on sensor side.

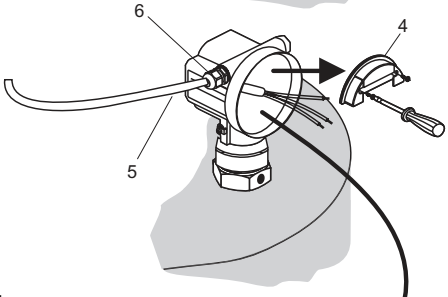

- Make connection (see pin assignment).
- Re-insert terminal module.
- Tighten cable gland (6). Max. torque 10...12 Nm!
- Tighten screws on cover plate (4).
- Insert display if fitted.
- Screw on housing cover (2).
  (on dust-Ex torque » 40 Nm).
- Switch on power supply.

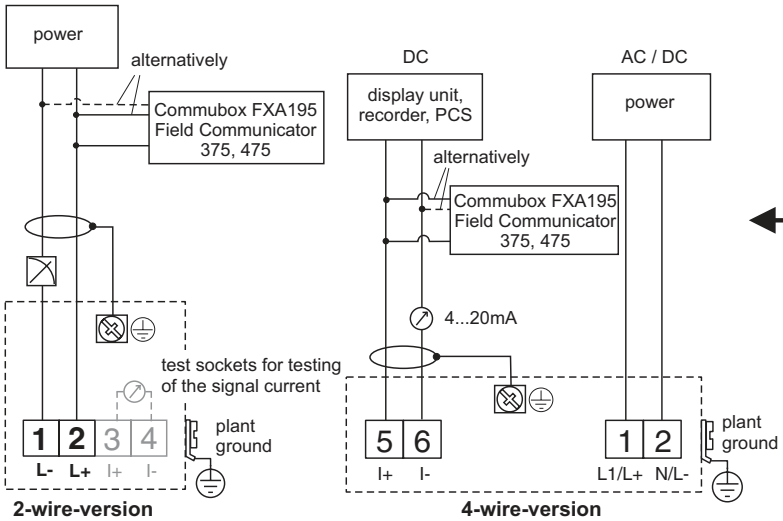

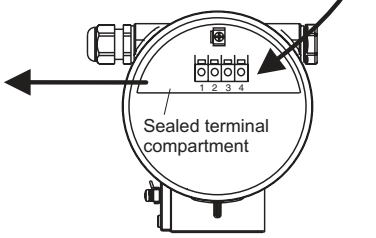

Note!
If 4-wire for dust-Ex-applications is used, the current output is intrinsically save.

L00-FMP40xxx-04-00-00-en-001

Wiring in T12 housing

Before connection please note the following:

Caution!

- The power supply must be identical to the data on the nameplate (1)..
- Switch off power supply before connecting up the device.
- Connect Equipotential bonding to transmitter ground terminal (7) before connecting up the device..
- Tighten the locking screw (8):
  It form the connection between the probe and the housing ground potential.

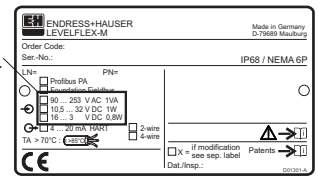

When you use the measuring system in hazardous areas, make sure you comply with national standards and the specifications in the safety instructions (XA`s).
Make sure you use the specific cable gland.

Connect up the Levelflex M as follows:

Before unscrew housing cover (2) at separate connection room' turn off the power supply!

- Insert cable (3) through gland (4).
  A standard installation cable is sufficient if only the analogue signal is used. Use a screened cable when working with a superimposed communications signal (HART).

Only gournd screening of the line (5) on sensor side:

- Make connection (see pin assignment).
- Tighten cable gland (4).
  Max. torque 10...12 Nm!
- Screw on housing cover (2).
  (on dust-Ex torque » 40 Nm).
- Switch on power supply.

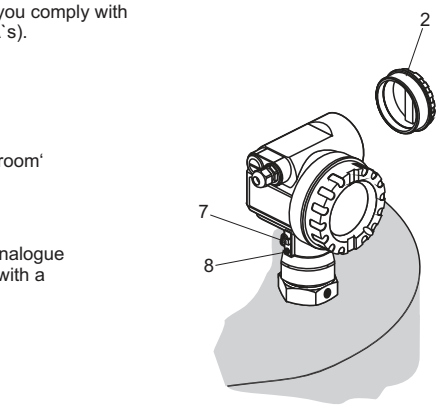

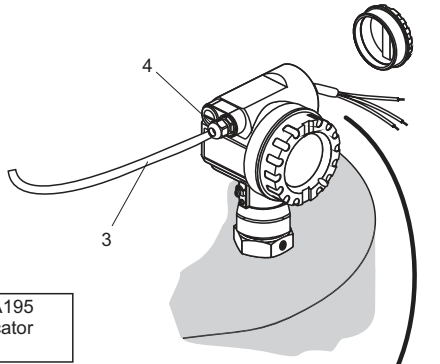

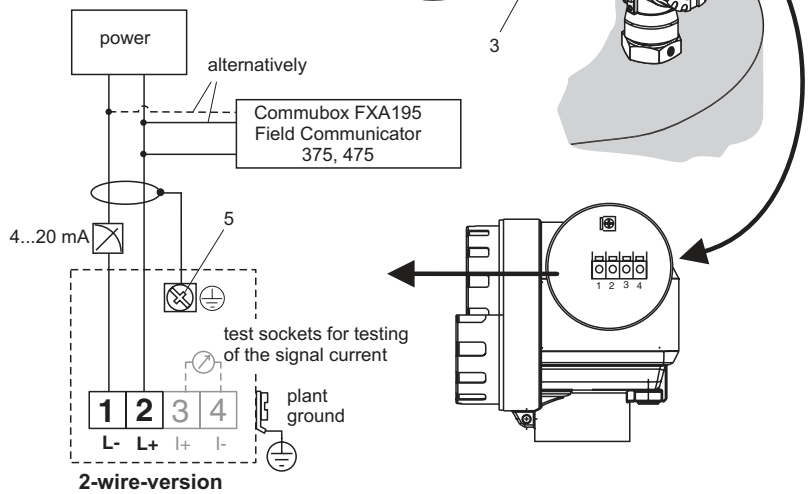

L00-FMP40xxx-04-00-00-en-002

4.2 Connecting the measuring unit

Terminal compartment

Three housings are available:
- Aluminium housing F12 with additionally sealed terminal compartment for:
  - standard,
  - Ex ia.
  - Dust-Ex
- Aluminium housing T12 with separate terminal compartment for:
  - standard,
  - Ex e,
  - Ex d
  - Ex ia (with overvoltage protection).
  - Dust-Ex
- Stainless steel 316L (1.4435) housing F23 for:
  - standard,
  - Ex ia.
  - Dust Ex.

After mounting, the housing can be turned 350° in order to simplify access to the display and the terminal compartment.

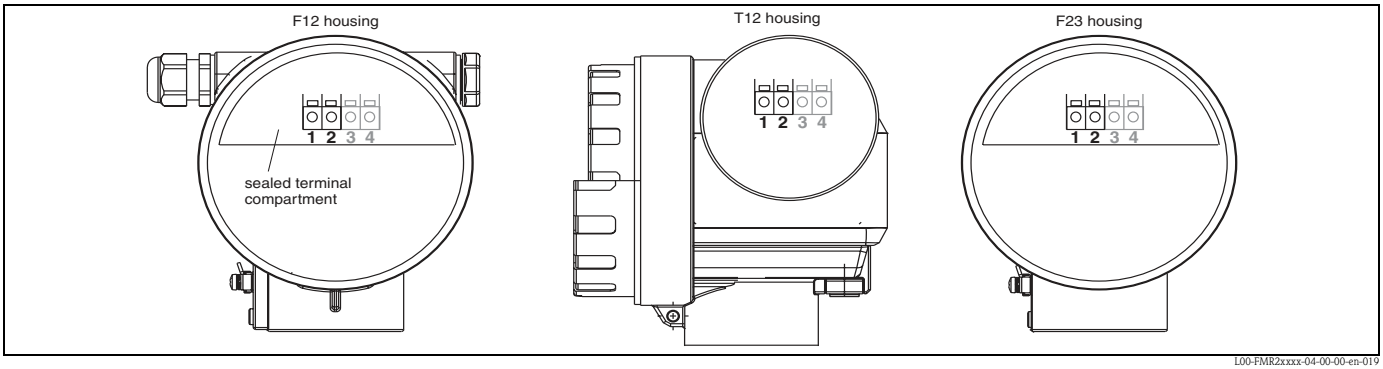

The device data are given on the nameplate together with important information regarding the analog output and voltage supply.
Housing orientation regarding the wiring see "Turn housing", → 📄 33.

Load HART

Minimum load for Hart communication: 250 Ω

Ground connection

It is necessary to make a good ground connection to the ground terminal on the outside of the housing, in order to achieve EMC security.

Cable gland

Type		Clamping area
Standard, Ex ia, IS	Plastic M20x1,5	5 to 10 mm
Ex em, Ex nA	Metal M20x1.5	7 to 10.5 mm

Terminals

For wire cross-sections of 0.5 to 2.5 mm^2

Cable gland

- Cable gland: M20x1.5 (only cable entry for Ex d)
- Cable entry: G½ or ½NPT

Supply voltage

HART, 2-wire

The following values are the voltages across the terminals directly at the device:

Communication		Current consumption	Terminal voltage
HART	standard	4 mA	16 V to 36 V
		20 mA	7.5 V to 36 V
	Ex ia	4 mA	16 V to 30 V
		20 mA	7.5 V to 30 V
	Ex em Ex d	4 mA	16 V to 30 V
		20 mA	11 V to 30 V
Fixed current, adjustable e.g. for solar power operation (measured value transferred at HART)	standard	11 mA	10 V to 36 V
	Ex ia	11 mA	10 V to 30 V
Fixed current for HART Multidrop mode	standard	4 mA[1)]	16 V to 36 V
	Ex ia	4 mA[1)]	16 V to 30 V

1) Start up current 11 mA.

HART residual ripple, 2-wire: $U_{ss} \leq 200$ mV

HART, 4-wire active

Version	Voltage	Max. load
DC	10.5 to 32 V	600 Ω
AC 50/60 Hz	90 to 253 V	600 Ω

HART residual ripple, 4-wire, DC version: $U_{ss} = 2$ V, voltage incl. ripple within the permitted voltage (10.5 to 32 V).

Current consumption

Communication	Output current	Current consumption	Power consumption
HART, 2-wire	3.6 to 22 mA[1)]	—	min. 60 mW, max. 900 mW
HART, 4-wire (90 to 250 V_{AC})	2.4 to 22 mA	~ 3 to 6 mA	~ 3,5 VA
HART, 4-wire (10.5 to 32 V_{DC})	2.4 to 22 mA	~ 100 mA	~ 1 W

1) For HART-Multidrop: start up current is 11 mA.

Overvoltage protection

If the measuring device is used for the level measurement in flammable liquids which requires the use of an overvoltage protection according to EN/IEC 60079-14 or EN/IEC 60060-1 (10 kA, Puls 8/20 µs) it has to be ensured that

- the measuring device with integrated overvoltage protection with gas discharge tubes within the T12-enclosure is used, refer to "Product structure", → 📄 6
  or
- this protection is achieved by the use of other appropriate measures (external protection devices e.g. HAW562Z).

4.2.1 HART connection with Endress+Hauser RMA422 / RN221N

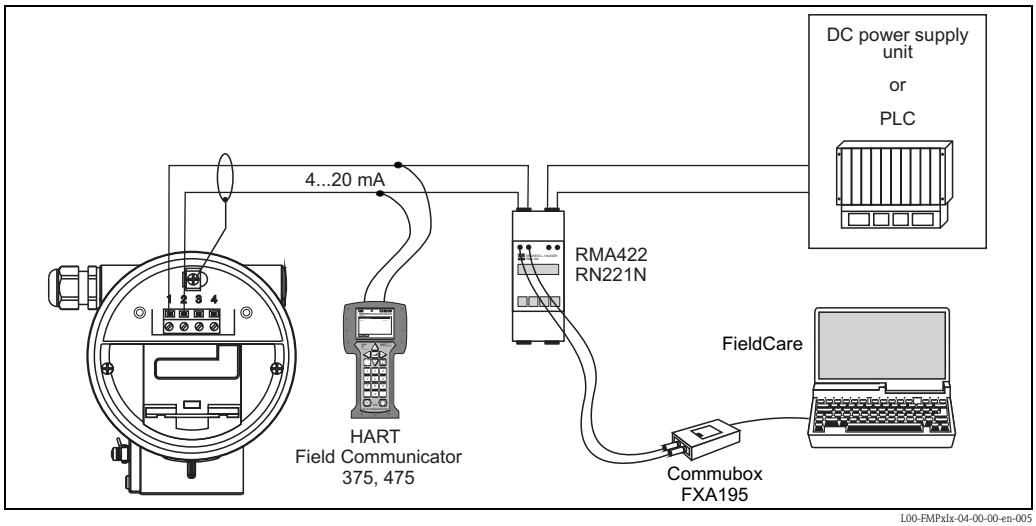

4.2.2 HART connection with other supplies

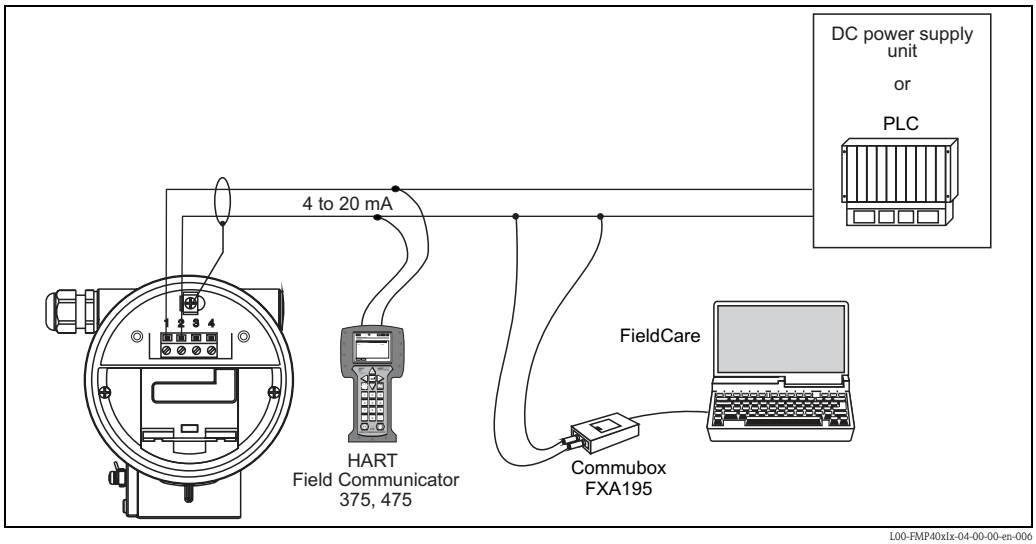

4.3 Recommended connection

4.3.1 Equipotential bonding

Connect the Equipotential bonding to the external ground terminal (1) of the transmitter.

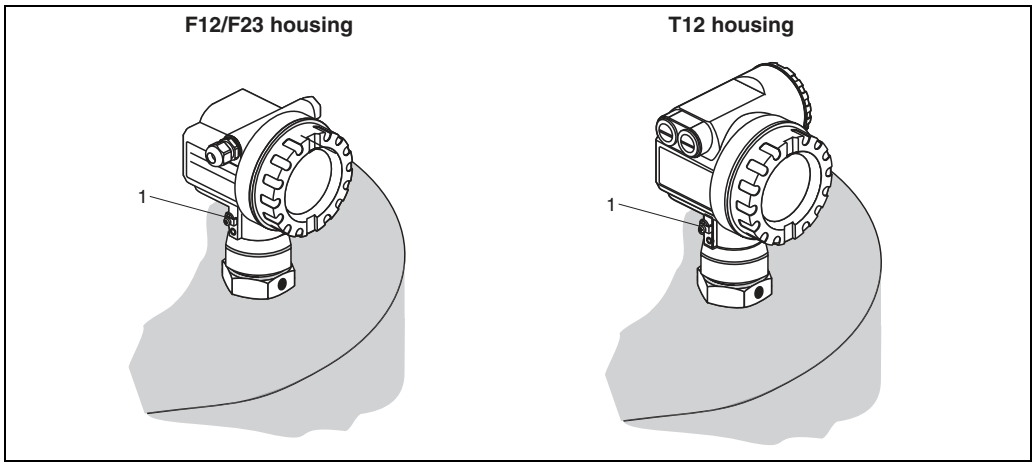

4.3.2 Wiring screened cable

Caution!
In Ex applications, the device must only be grounded on the sensor side. Further safety instructions are given in the separate documentation for applications in explosion hazardous areas.

4.4 Degree of protection

- with closed housing tested according to
  – IP68, NEMA 6P (24 h at 1.83 m under water surface)
  – IP66, NEMA 4X
- with open housing: IP20, NEMA 1 (also ingress protection of the display)

4.5 Post-connection check

After wiring the measuring device, perform the following checks:
- Is the terminal allocation correct (→ 34, 35)?
- Is the cable gland tight?
- Is the housing cover screwed tight?
- If auxiliary power is available:
  Is the device ready for operation and is the liquid crystal display visible?

5 Operation

5.1 Quick operation guide

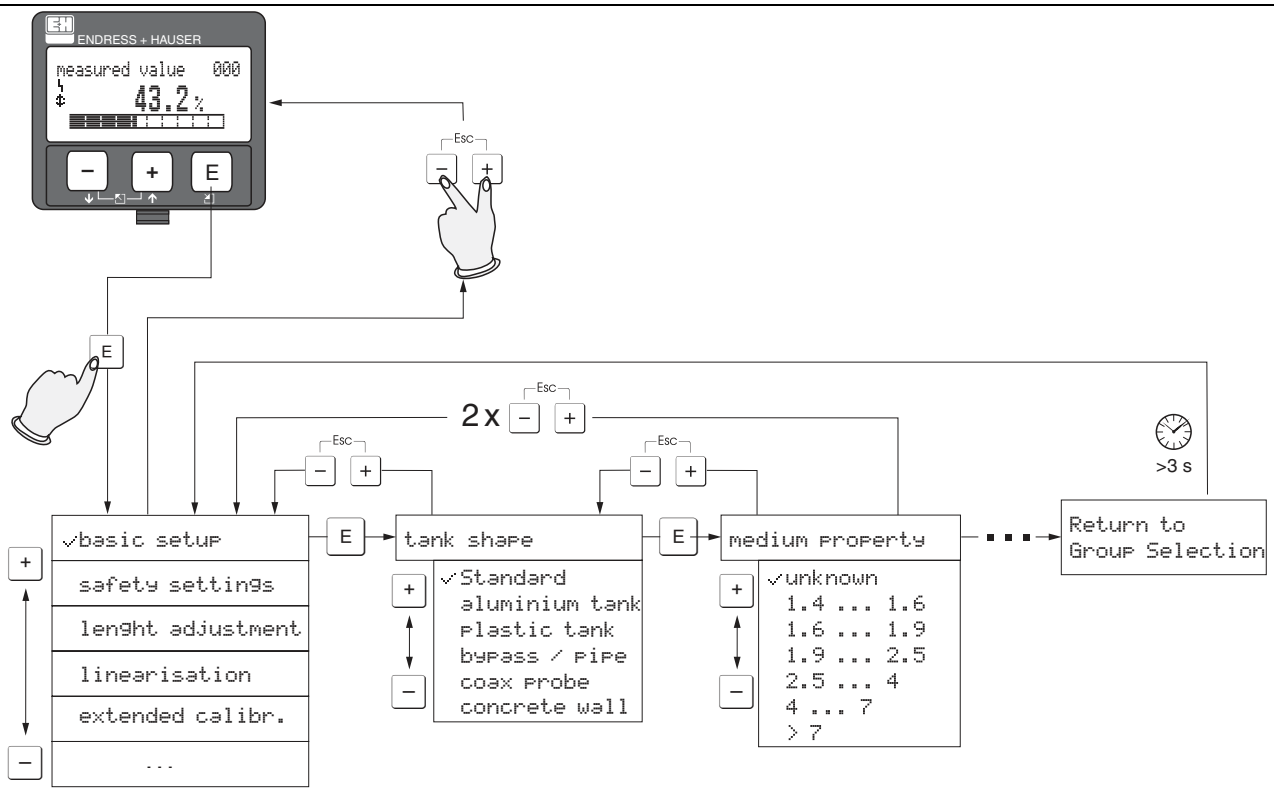

Selection and configuration in Operation menu:

1.) Change from Measured Value Display to **Group Selection** by pressing E

2.) Press − or + to select the required **Function Group** (e.g.. "basic setup (00)") and confirm by pressing E ➜ First **function** (e.g. "tank shape (002)") is selected.

Note!
The active selection is marked by a ✔ in front of the menu text.

3.) Activate Edit mode with + or −.

Selection menus:

a) Select the required **Parameter** in selected **function** (e.g. "tank shape (002)") with − or +.
b) E confirms selection ➜ ✔ appears in front of the selected parameter
c) E confirms the edited value ➜ system quits Edit mode
d) + / − (= Esc) interrupts selection ➜ system quits Edit mode

Typing in numerals and text:

a) Press + or − to edit the first character of the **numeral / text** (e.g. "empty calibr. (005)")
b) E positions the cursor at the next character ➜ continue with (a) until you have completed your input
c) if a ↵ symbol appears at the cursor, press E to accept the value entered ➜ system quits Edit mode
d) + / − (= Esc) interrupts the input, system quits Edit mode

4) Press E to select the next **function** (e.g. "medium property (003)")

5) Press + / − (= Esc) once ➜ return to previous **function** (e.g. "tank shape (002)")
Press + / − (= Esc) twice ➜ return to **Group selection**

6) Press + / − (= Esc) to return to **Measured value display**

L00-FMP4xxxx-19-00-00-en-001

5.1.1 General structure of the operating menu

The operating menu is made up of two levels:

- **Function groups (00, 01, 03, …, 0C, 0D):**
  The individual operating options of the device are split up roughly into different function groups. The function groups that are available include, e.g.: "**basic setup**", "**safety settings**.", "**output**", "**display**", etc.
- **Functions (001, 002, 003, …, 0D8, 0D9):**
  Each function group consists of one or more functions. The functions perform the actual operation or parameterisation of the device. Numerical values can be entered here and parameters can be selected and saved. The available functions of the "**basic setup**" **(00)** function group include, e.g.: "**tank properties**" **(002)**, "**medium property**" **(003)**, "**process cond.**" **(004)**, "**empty calibr.**" **(005)**, etc.

If, for example, the application of the device is to be changed, carry out the following procedure:

1. Select the "**basic setup**" **(00)** function group.
2. Select the "**tank properties**" **(002)** function (where the existing tank shape is selected).

5.1.2 Identifying the functions

For simple orientation within the function menus, for each function a position is shown on the display.

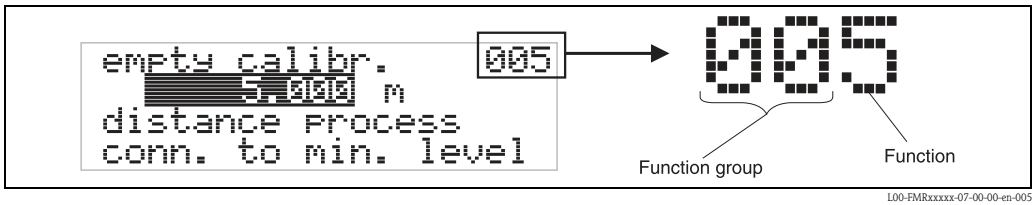

The first two digits identify the function group:

- **basic setup** **00**
- **safety settings** **01**
- **linearisation** **04**

...

The third digit numbers the individual functions within the function group:

- **basic setup** **00** →
  - **tank properties** **002**
  - **medium property** **003**
  - **process cond.** **004**

  ...

Here after the position is always given in brackets (e.g. "**tank properties**" **(002)**) after the described function.

5.2 Display and operating elements

5.2.1 Liquid crystal display (LCD)

Four lines with 20 characters each. Display contrast adjustable through key combination.

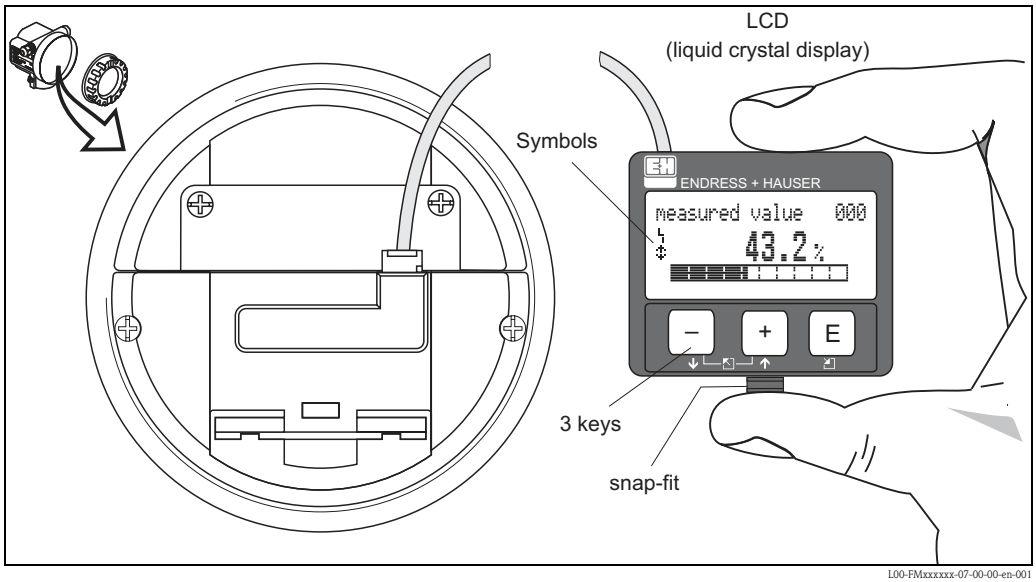

L00-FMxxxxxx-07-00-00-en-001

The VU331 LCD display can be removed to ease operation by simply pressing the snap-fit (see graphic above). It is connected to the device by means of a 500 mm cable.

5.2.2 Display

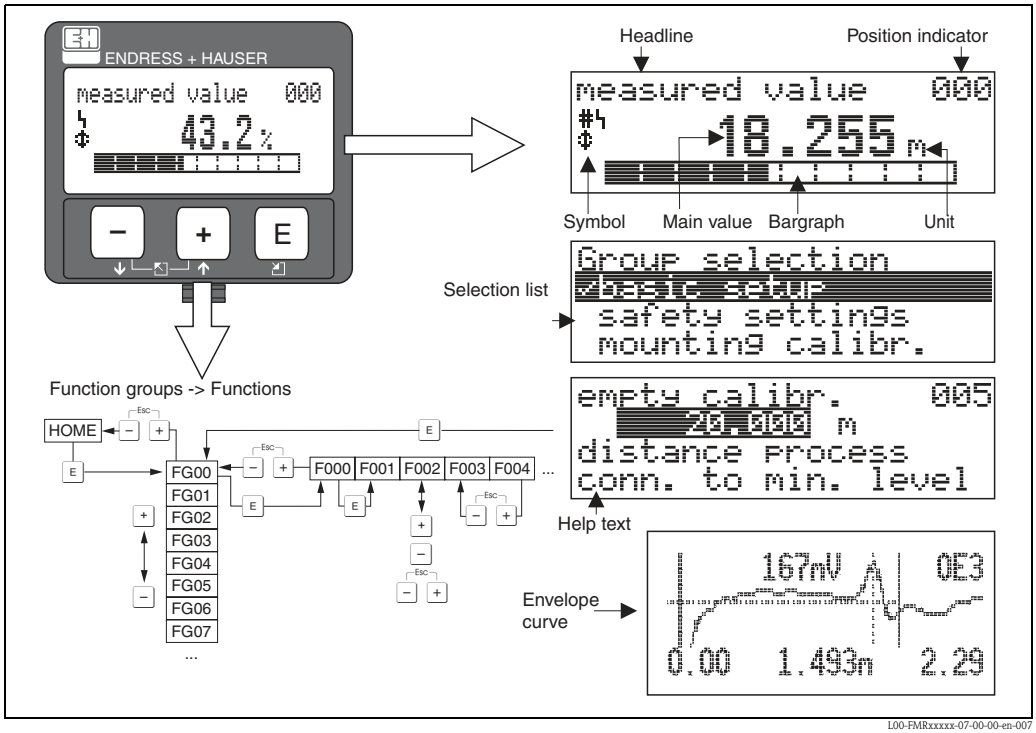

L00-FMRxxxxx-07-00-00-en-007

5.2.3 Display symbols

The following table describes the symbols that appear on the liquid crystal display:

Sybmol	Meaning
	**ALARM_SYMBOL** This alarm symbol appears when the device is in an alarm state. If the symbol flashes, this indicates a warning.
	**LOCK_SYMBOL** This lock symbol appears when the device is locked, i.e. if no input is possible.
	**COM_SYMBOL** This communication symbol appears when a data transmission via e.g. HART, PROFIBUS PA or FOUNDATION Fieldbus is in progress.

5.2.4 Key assignment

The operating elements are located inside the housing and are accessible for operation by opening the lid of the housing.

Function of the keys

Key(s)	Meaning
+ or ↑	Navigate upwards in the selection list. Edit numeric value within a function.
− or ↓	Navigate downwards in the selection list. Edit numeric value within a function.
Esc − + or ←	Navigate to the left within a function group.
E	Navigate to the right within a function group, confirmation.
+ and E or − and E	Contrast settings of the LCD.
+ and − and E	Hardware lock / unlock After a hardware lock, an operation of the device via display or communication is not possible! The hardware can only be unlocked via the display. An unlock parameter must be entered to do so.

5.3 Local operation

5.3.1 Locking of the configuration mode

The Levelflex can be protected in two ways against unauthorised changing of device data, numerical values or factory settings:

Function "unlock parameter" (0A4):

A value **<> 100** (e.g. 99) must be entered in "**unlock parameter**" **(0A4)** in the "**diagnostics**" **(0A)** function group. The lock is shown on the display by the symbol and can be released again either via the display or by communication.

Hardware lock:

The device is locked by pressing the [+], [−] and [E] keys at the same time. The lock is shown on the display by the symbol and can **only** be unlocked again via the display by pressing the [+], [−] and [E] keys at the same time again. It is **not** possible to unlock the hardware by communication. All parameters can be displayed even if the device is locked.

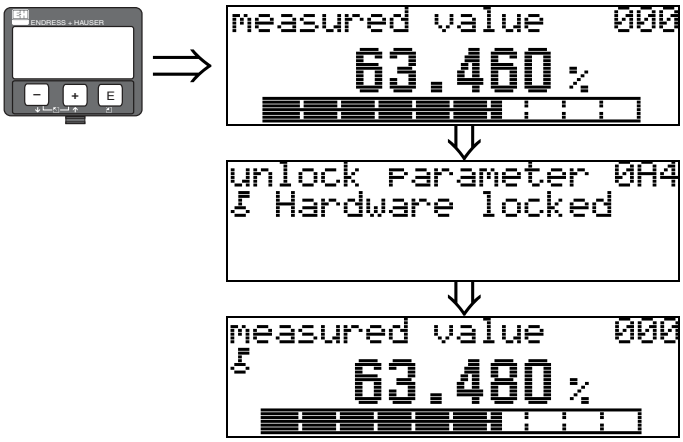

[+], [−] and [E] press simultaneous

The LOCK_SYMBOL appears on the LCD

5.3.2 Unlocking of configuration mode

If an attempt is made to change parameters when the device is locked, the user is automatically requested to unlock the device:

Function "unlock parameter" (0A4):

By entering the unlock parameter (on the display or via communication)

100 = for HART devices

the Levelflex is released for operation.

Hardware unlock:

After pressing the [+], [−] and [E] keys at the same time, the user is asked to enter the unlock parameter

100 = for HART devices

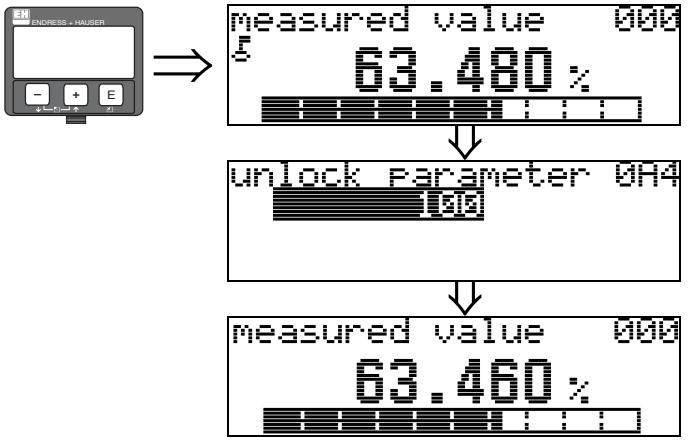

[+], [−] and [E] press simultaneous

Please enter unlock code and confirm with [E]

Caution!
Changing certain parameters such as all sensor characteristics, for example, influences numerous functions of the entire measuring system, particularly measuring accuracy. There is no need to change these parameters under normal circumstances and consequently, they are protected by a special code known only to the Endress+Hauser service organization.
Please contact Endress+Hauser if you have any questions.

5.3.3 Factory settings (Reset)

Caution!
A reset sets the device back to the factory settings. This can lead to an impairment of the measurement. Generally, you should perform a basic setup again following a reset.

A reset is only necessary if the device...
- ... no longer functions
- ... must be moved from one measuring point to another
- ... is being de-installed /put into storage/installed



User input ("reset" (0A3)):

- 333 = customer parameters

333 = reset customer parameters

This reset is recommended whenever an device with an unknown "history" is to be used in an application:
- The Levelflex is reset to the default values.
- **The customer specific tank map is not deleted.**
- The mapping can also be deleted in the "**cust. tank map**" **(055)** function of the "**extended calibr**" **(05)** function group.
- A linearisation is switched to "**linear**" although the table values are retained. The table can be reactivated in the "**linearisation**" **(04)** function group.

List of functions that are affected by a reset:

- tank properties (002)
- medium cond. (003)
- process proper. (004)
- empty calibr. (005)
- full calibr. (006)
- output on alarm (010)
- output on alarm (011)
- outp. echo loss (012)
- ramp %span/min (013)
- delay time (014)
- safety distance. (015)
- in safety dist. (016)
- overspill protection (018)
- end of probe (030)
- level/ullage (040)
- linearisation (041)
- customer unit (042)
- max. scale (046)
- diameter vessel (047)
- check distance (051)
- range of mapping (052)
- start mapping (053)
- offset (057)
- output damping (058)
- low output limit (062)
- curr. output mode (063)
- fixed cur. value (064)
- 4mA value (068)
- language (092)
- back to home (093)
- format display (094)
- no of decimals (095)
- sep. character (096)
- unlock parameter (0A4)

A complete "**basic setup**" **(00)** must be activated.

5.4 Display and acknowledging error messages

Type of error

Errors that occur during commissioning or measuring are displayed immediately on the local display. If two or more system or process errors occur, the error with the highest priority is the one shown on the display.

The measuring system distinguishes between two types of error:

- **A (Alarm):**
  Device goes into a defined state (e.g. max 22 mA)
  Indicated by a constant symbol.
  (For a description of the codes, → 82)
- **W (Warning):**
  Device continue measuring, error message is displayed.
  Indicated by a flashing symbol.
  (For a description of the codes, → 82)
- **E (Alarm / Warning):**
  Configurable (e.g. loss of echo, level within the safety distance)
  Indicated by a constant/flashing symbol.
  (For a description of the codes, → 82)



Error messages

Error messages appear as four lines of plain text on the display. In addition, a unique error code is also output. A description of the error codes, → 82.

- The "**diagnostics**" **(0A)** function group can display current errors as well as the last errors that occurred.
- If several current errors occur, use [+] or [−] to page through the error messages.
- The last occurring error can be deleted in the "**diagnostics**" **(0A)** function group with the function "**clear last error**" **(0A2)**.

5.5 HART communication

Apart from local operation, you can also parameterise the measuring device and view measured values by means of a HART protocol. There are two options available for operation:
- Operation via the universal handheld operating unit, the Field Communicator 375, 475.
- Operation via the Personal Computer (PC) using the operating program (e.g. FieldCare: for connection, → 38).

5.5.1 Operation with the Field Communicator 375, 475

All device functions can be adjusted via a menu operation with the Field Communicator 375, 475.

Note!
Further information on the HART handheld unit is given in the respective operating manual included in the transport bag of the Field Communicator 375, 475.

5.5.2 Endress+Hauser operating program

The operating program FieldCare is an Endress+Hauser Plant Asset Management Tool based on FDT technology. You can use Field-Care to configure all your Endress+Hauser devices, as well as devices from other manufacturers that support the FDT standard. Hardware and software requirements you can find on the internet:
www.endress.com → select your country → search: FieldCare → FieldCare → Technical Data.

FieldCare supports the following functions:
- Online configuration of transmitters
- Signal analysis via envelope curve
- Tank linearization
- Loading and saving of device data (upload/download)
- Documentation of the measuring point

Connection options:
- HART via Commubox FXA195 and the USB port of a computer
- Commubox FXA291 with ToF Adapter FXA291 via service interface

Menu-guided commissioning

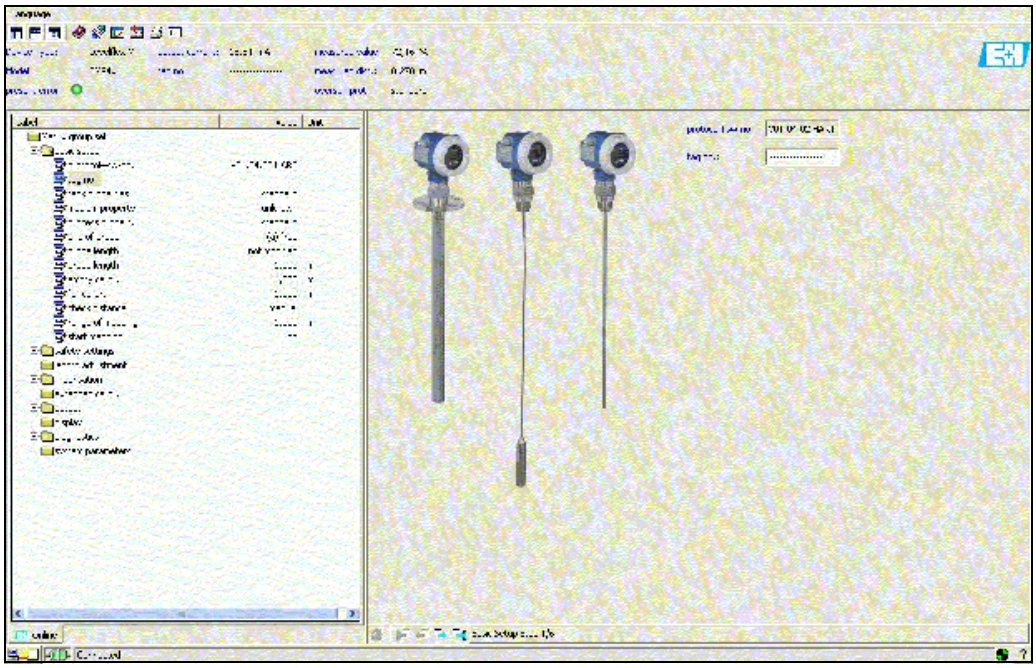

L00-FMP4xxxx-20-00-00-en-001

Signal analysis via envelope curve

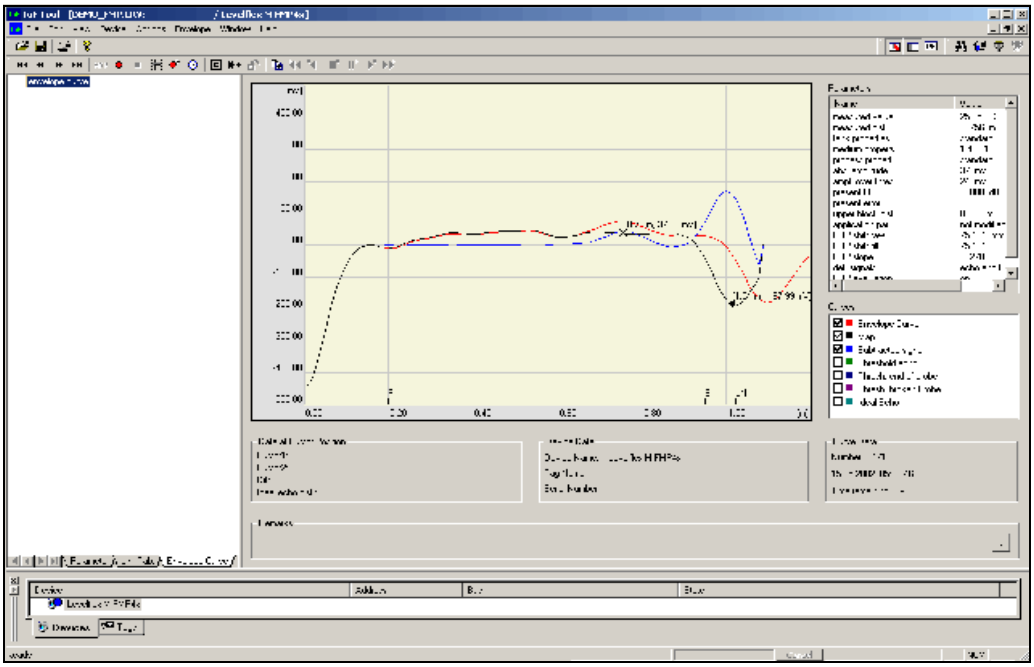

L00-FMP4xxxx-20-00-00-en-007

Tank linearization

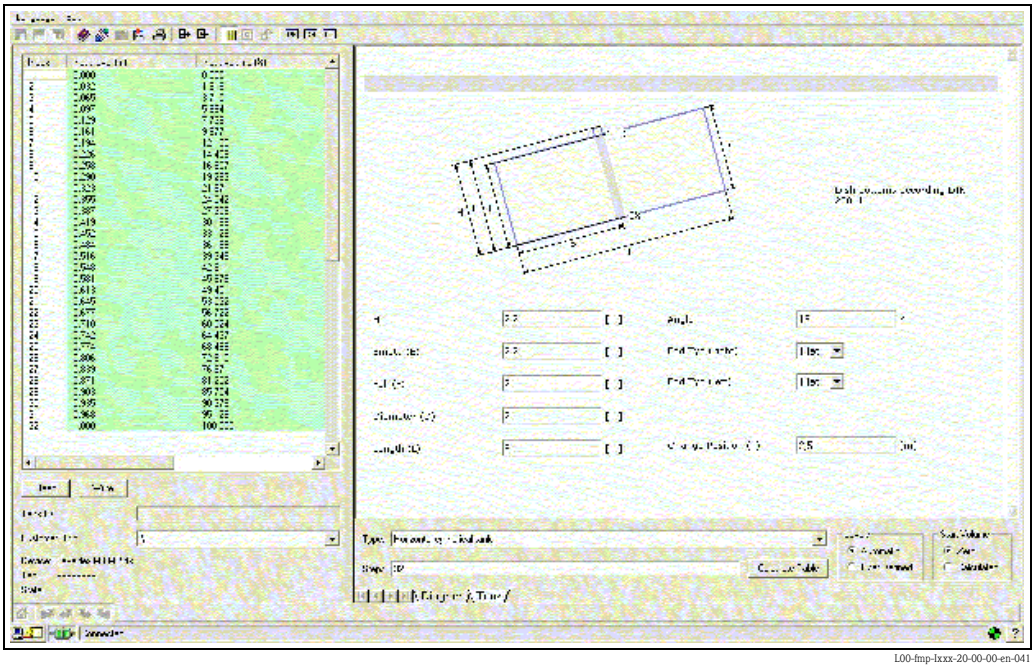

L00-fmp-lxxx-20-00-00-en-041

6 Commissioning

6.1 Function check

Make sure that all final checks have been completed before you start up your measuring point:
- Checklist "Post-installation check", → 📄 33.
- Checklist "Post-connection check", → 📄 39.

6.2 Switching on the measuring device

When the device is switched on for the first time, the following messages appear in a sequence of 5 s on the display: software version, communication protocoll and language selection.

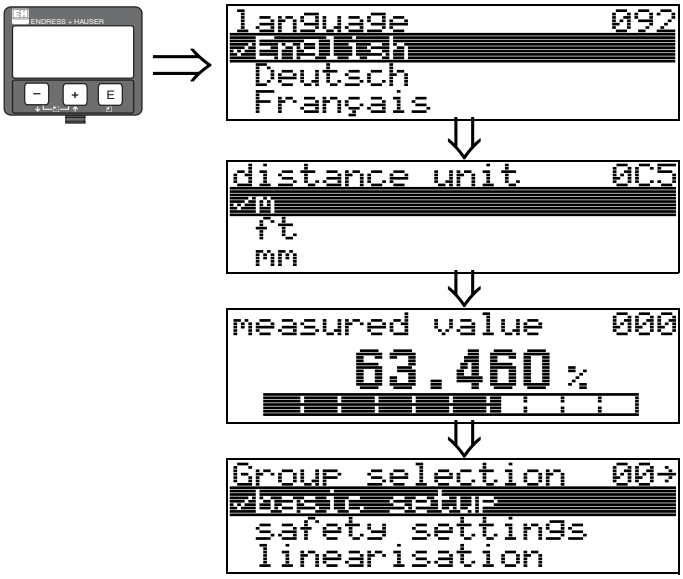

Select the language
(this message appears the first time the device is switched on)

Select the basic unit
(this message appears the first time the device is switched on)

The current measured value is displayed

After E is pressed, you reach the group selection

This selection enables you to perform the basic setup

6.3 Basic Setup

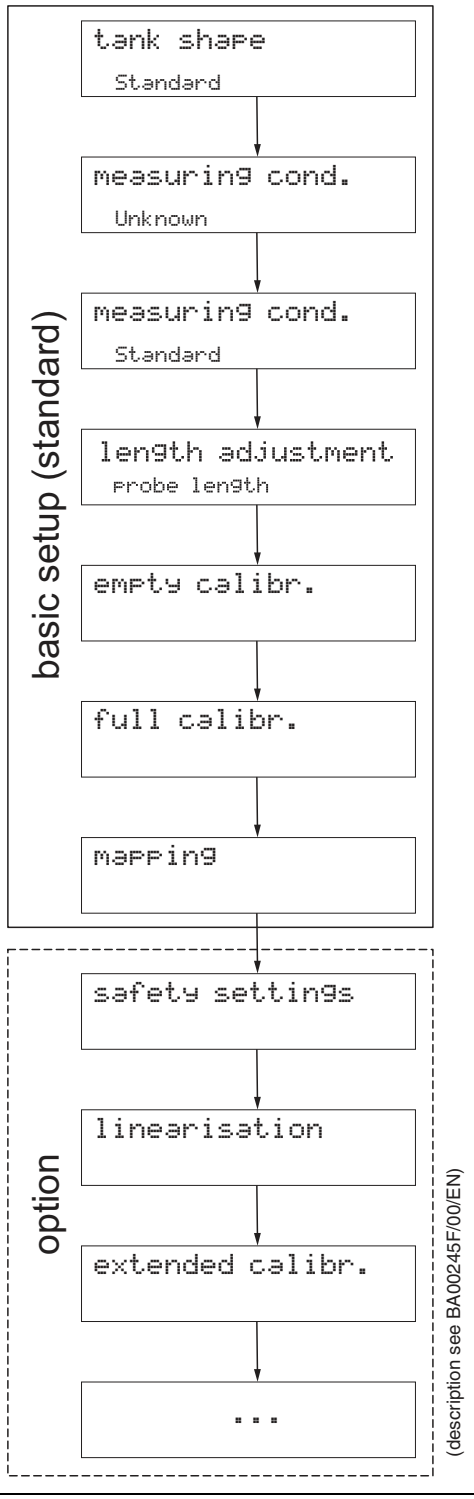

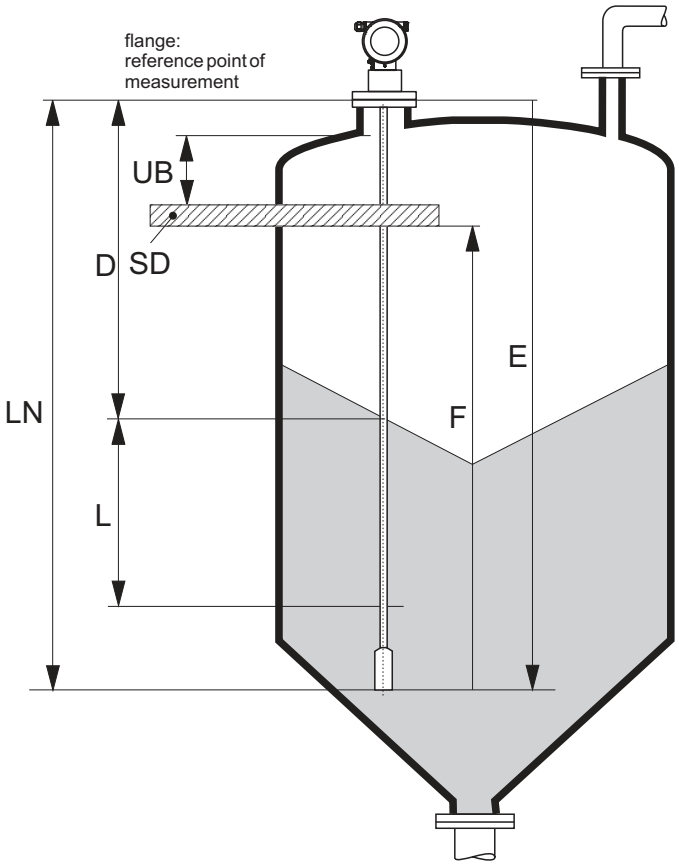

E = empty calibr. (= zero) setting in 005
F = full calibr. (= span) setting in 006
D = distance (distance flange / product) display in 0A5
L = level display in 0A6

LN = probe length setting in 033
UB = upper blocking distance setting in 059
SD = safety distance setting in 015

L00-FMP4xxxx-19-00-00-en-031

Caution!
The basic setup is sufficient for successful commissioning in most applications.
The Levelflex is initially adjusted at the factory to the probe length ordered, so that in most cases only the application parameters, that automatically adapt the device to the measuring conditions, need to be entered. For models with current output, the factory adjustment for zero point "E" and span "F" is 4 mA and 20 mA. For digital outputs and the display module, the factory adjustment for zero point "E" and span "F" is 0 % and 100 %.
A linearisation function with max. 32 points, that is based on a manually or semi-automatically input table, can be activated on-site or via remote operation. This function enables, for example, the conversion of the level into units of volume or weight.

Note!
The Levelflex M allows to check for broken probe. On delivery, this function is switched off, because otherwise shortening of the probe would be mistaken for a broken probe.
In order to activate this function, perform the following steps:

1. With the probe uncovered, perform a mapping ("**range of mapping**" **(052)** and "**start mapping.**" **(053)**).
2. Activate the "**broken probe det**" **(019)** function in the "**safety settings**" **(01)** function group.

Complex measuring operations necessitate additional functions that the user can use to customise the Levelflex as necessary to suit his specific requirements. The functions available to do this are described in detail in the BA00245F/00/EN.
Comply with the following instructions when configuring the functions in the "**basic setup**" **(00)**:

- Select the functions as described, → 📄 40.
- Certain functions (e.g. starting an interference echo mapping (053)) prompt you to confirm your data entries. Press [+] or [−] to select "**YES**" and press [E] to confirm. The function is now started.
- If you do not press a key during a configurable time period (→ function group "**display (09)**"), an automatic return is made to the home position (measured value display).

Note!

- The device continues to measure while data entry is in progress, i.e. the current measured values are output via the signal outputs in the normal way.
- If the envelope curve mode is active on the display, the measured values are updated in a slower cycle time. Thus, it is advisable to leave the envelope curve mode after the measuring point has been optimised.
- If the power supply fails, all preset and parameterised values remain safely stored in the EEPROM.
- All functions are described in detail, as is the overview of the operating menu itself, in the manual **"BA00245F – Description of Instrument Functions"** on the enclosed CD-ROM.

6.4 Basic Setup with the VU331

Function "measured value" (000)



This function displays the current measured value in the selected unit (see "**customer unit**" **(042)**) function). The number of digits after decimal point can be selected in the "**no.of decimals**" **(095)** function.

6.4.1 Function group "basic setup" (00)



Function "tank properties" (002)

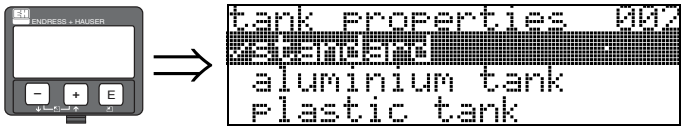

This function is used to select the tank properties.

Selection:
- **standard**
- aluminium tank
- plastic tank
- bypass / pipe
- coax probe
- concrete wall

standard

The "**standard**" option is recommended for normal containers for rod and rope probes.

aluminium tank

The "**aluminium tank**" option is designed especially for high aluminium silos that cause an increased level of noise when empty. This option is only useful for probes longer than 4 m. For short probes (< 4 m) select the "**standard**" option!

Note!
If "**aluminium tank**" is selected, the device calibrates of its own accord when first filled, depending on the medium's properties. Slope errors can, therefore, occur when beginning the first filling procedure.

plastic tank

Select the "**plastic tank**" option when installing probes in wood or plastic containers **without** metallic surfaces at the process connection (see installation in plastic containers). When using a metallic surface at the process connection, the "**standard**" option is sufficient!

Note!
In principle the employment of a metallic surface area should be preferred at the process connection!

bypass / pipe

The "**bypass / pipe**" option is designed especially for the installation of probes in a bypass or a stilling well. If this option is selected, the upper blocking distance is preset to 100 mm.

coax probe

Select the "**coax probe**" option when using a coaxial probe. When this setting is made, the evaluation is adapted to the high sensitivity of the coax probe. This option should, therefore, **not** be selected when using rope or rod probes.

concrete wall

The "**concrete wall**" option takes into account the signal-damping property of concrete walls when mounting with < 1 m distance to the wall.

Function "medium property" (003)

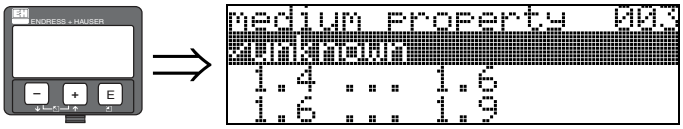

This function is used to select the dielectric constant.

Selection:
- **unknown**
- 1.4 ... 1.6 (use coaxial or Rod probe with installation in metallic pipes ≤ DN150)
- 1.6 ... 1.9
- 1.9 ... 2.5
- 2.5 ... 4.0
- 4.0 ... 7.0
- > 7.0

Media group	DC (Er)	Typical bulk solids	Typical liquids	Measuring range	
				bare metallic probes	PA-coated rope probes
1	1.4 to 1.6		– Condensed gases, e.g. N_2, CO_2	4 m (157"), only coax probe	—
2	1.6 to 1.9	– Plastic granulate – White lime, special cement – Sugar	– Liquefied gas, e.g. Propane – Solvent – Frigen / Freon – Palm oil	25 m to 30 m (984" to 1181")	12,5 m to 15 m (492" to 590")
3	1.9 to 2.5	– Portland cement, plaster	– Mineral oils, fuels	30 m to 35 m (1181" to 1378")	—
		– Flour	—	—	15 m to 25 m (590" to 984")
4	2.5 to 4	– Grain, seeds	—	—	25 m to 30 m (984" to 1181")
		– Ground stones – Sand	– Benzene, styrene, toluene – Furan – Naphthalene	35 m (1378")	25 m to 30 m (984" to 1181")
5	4 to 7	– Naturally moist (ground) stones, ores – Salt	– Chlorobenzene, chloroform – Cellulose spray – Isocyanate, aniline	35 m (1378")	35 m (1378")
6	> 7	– Metallic powder – Carbon black – Coal	– Aqueous solutions – Alcohols – Ammonia	35 m (1378")	35 m (1378")

The lower group applies to very loose or loosened bulk solids. Reduction of the max. possible measuring range by means of:
- Extremely loose surfaces of bulk solids, e.g. bulk solids with low piled density when filled pneumatically.
- Build-up, primarily of moist products.

Note!
Due to the high diffusion rate of ammonia it is recommended to use the FMP45 with gas-tight bushing for measurements in this medium.

Function "process propert." (004)

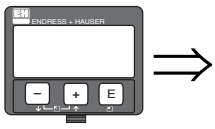



Use this function to adapt the device reaction to the filling speed in the tank. The setting impacts on an intelligent filter.

Selection:
- **standard**
- fast change
- slow change
- test:no filter

Selection:	standard	fast change	slow change	test:no filter
Application:	For all normal applications, bulk solids and fluids at low to medium filling speed and sufficiently large tanks.	Small tanks, primarily with fluids, at high filling speeds.	Applications with strong surface movement, e.g. caused by stirrer, primarily large tanks with slow to medium filling speed.	Shortest reaction time: ■ For test purposes ■ Measurement in small tanks at high filling speeds, if "rapid change" setting is too slow.
2-wire electronics:	Dead time: 4 s Rise time: 18 s	Dead time: 2 s Rise time: 5 s	Dead time: 6 s Rise time: 40 s	Dead time: 1 s Rise time: 0 s
4-wire electronics:	Dead time: 2 s Rise time: 11 s	Dead time: 1 s Rise time: 3 s	Dead time: 3 s Rise time: 25 s	Dead time: 0,7 s Rise time: 0 s

Function "end of probe" (030)

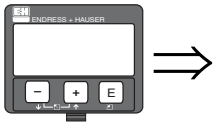

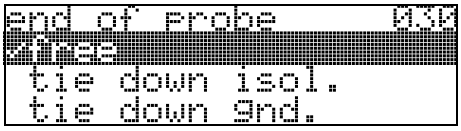

Use this function to select the polarity of the probe end signal. If the probe end is uncovered or in an insulated attachment, there is a negative probe end signal.
The signal from the probe end is positive if the attachment is grounded.

Selection:
- **free**
- tie down isol.
- tie down gnd.[1)]

1) If using a metallic centering of probe end.

Function "probe length" (031)

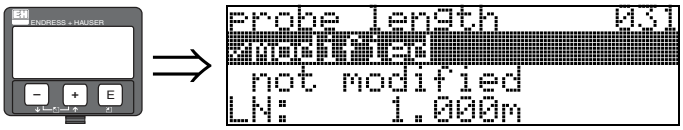

Use this function to select whether the probe length was changed after factory calibration. Only then is it necessary to enter or correct the probe length.

Selection:
- **not modified**
- modified

Note!
If "modified" was selected in the "**probe length**" **(031)** function, the probe length is defined in the next step.

Function "probe" (032)

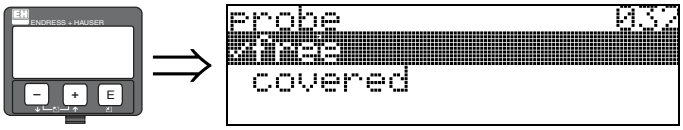

Use this function to select whether the probe is at the time of the commisioning uncovered or covered. If the probe is uncovered, the Levelflex can determine the probe length automatically "**determine length**" **(034)** function. If the probe is covered, a correct entry is required in the "**probe length**" **(033)** function.

Selection:
- **free**
- covered

Function "probe length" (033)

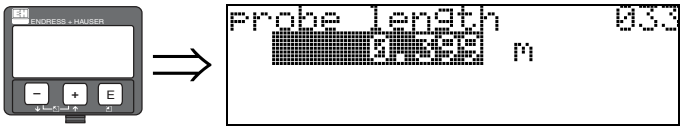

Use this function, the probe length can be entered manually.

Function "determine length" (034)

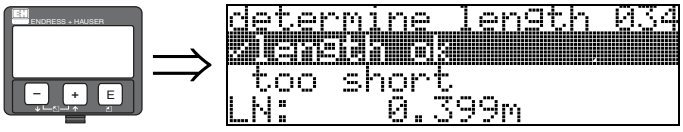

Use this function, the probe length can be determined automatically.
Due to the mounting conditions, the automatically determined probe length may be larger than the actual probe (typically 20 to 30 mm longer). This has no influence on the measuring accuracy.
When entering the empty value for a linearisation, please use the "empty calibration" instead of the automatically determined probe length.

Selection:
- **length ok**
- too short
- too long

After selection "length too short" or "length too long", the calculation of the new value need approx. 10 s.

Function "empty calibr." (005)

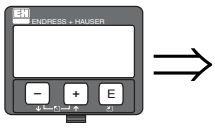

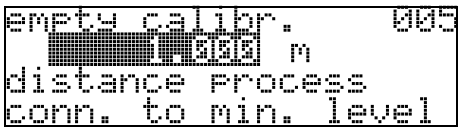

This function is used to enter the distance from the flange (reference point of the measurement) to the minimum level (= zero).

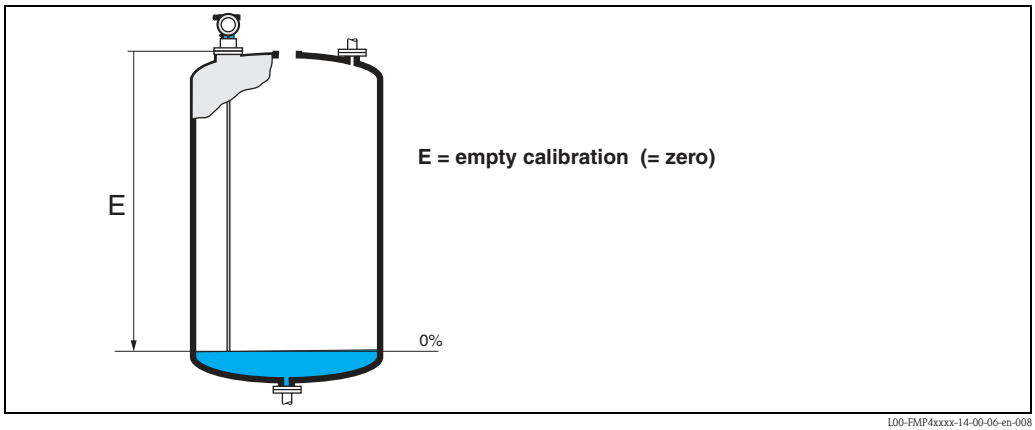

L00-FMP4xxxx-14-00-06-en-008

Function "full calibr." (006)

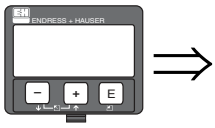

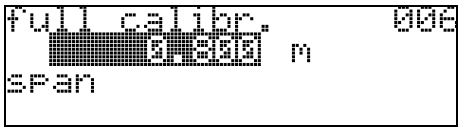

This function is used to enter the distance from the minimum level to the maximum level (= span).

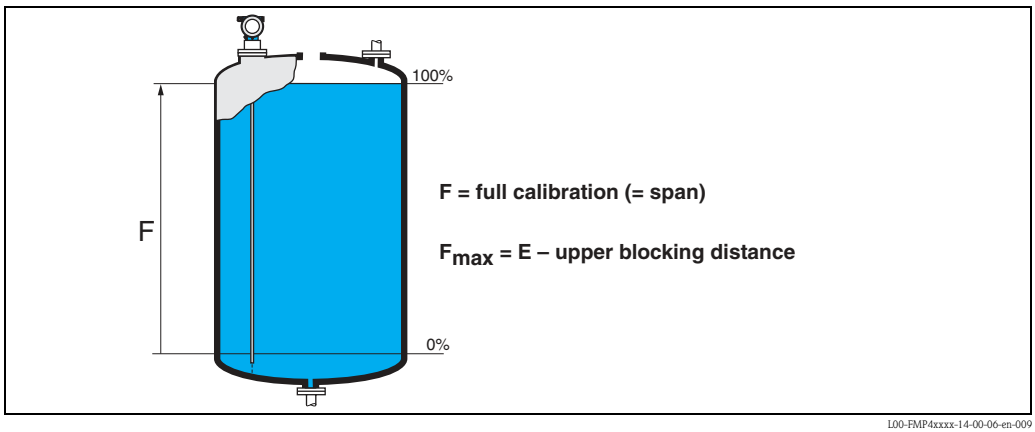

L00-FMP4xxxx-14-00-06-en-009



Note!
The usable measuring range lies between the upper blocking distance and the probe end. The values for empty distance "E" and span "F" can be set independently of this.

Function "dist./meas.value" (008)

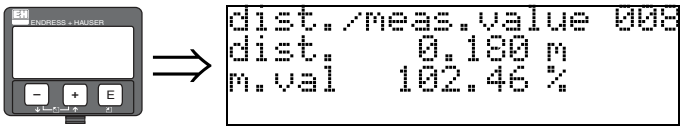

The **distance** measured from the reference point to the product surface and the **meas. value** calculated with the aid of the empty adjustment are displayed. Check whether the values correspond to the actual meas. value or the actual distance. The following cases can occur:

- Distance correct – meas. value correct → continue with the next function "**check distance**" **(051)**
- Distance correct – meas. value incorrect → Check "**empty calibr.**" **(005)**
- Distance incorrect – meas. value incorrect → continue with the next function "**check distance**" **(051)**

Function "check distance" (051)

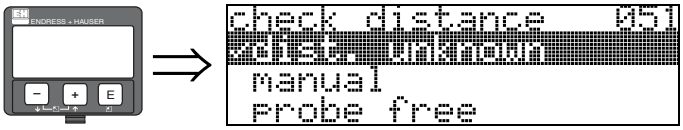

This function triggers the mapping of interference echoes. To do so, the measured distance must be compared with the actual distance to the product surface. The following options are available for selection:

Selection:

- distance = ok
- dist. too small
- dist. too big
- dist. unknown
- **manual**
- probe free

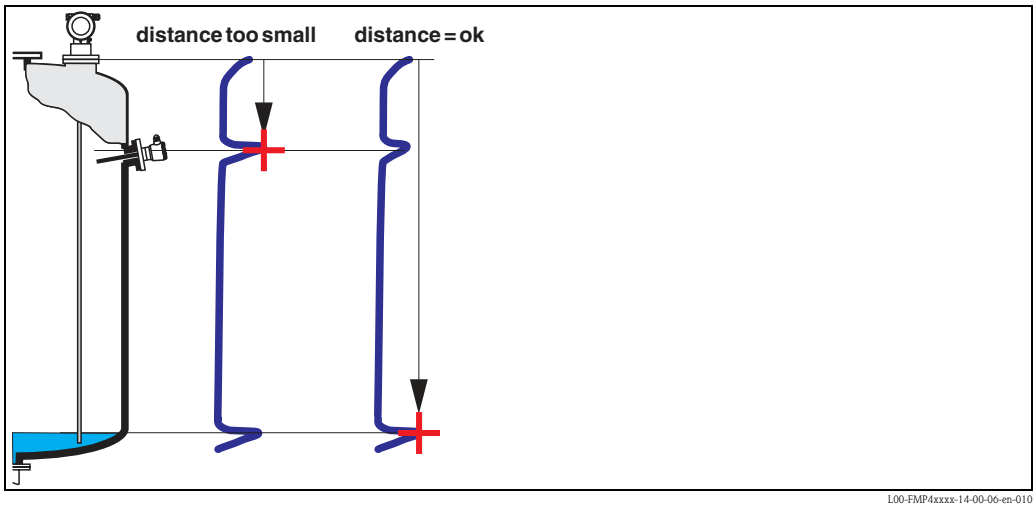

distance = ok
Use this function at part-covered probe. Choosing function "**manual**" or "**probe free**" at free probe.
- mapping is carried out up to the currently measured echo
- The range to be suppressed is suggested in the "**range of mapping**" **(052)** function

Anyway, it is wise to carry out a mapping even in this case.

Note!
At free probe, the mapping should be confirmed with the choice "**probe free**".

dist. too small
- At the moment, an interference is being evaluated
- Therefore, a mapping is carried out including the presently measured echoes
- The range to be suppressed is suggested in the "**range of mapping**" **(052)** function

dist. too big
- This error cannot be remedied by interference echo mapping
- Check the application parameters **(002), (003), (004)** and "**probe length.**" **(031)**

dist. unknown
If the actual distance is not known, no mapping can be carried out.

manual
A mapping is also possible by manual entry of the range to be suppressed. This entry is made in the "**range of mapping**" **(052)** function.

Caution!
The range of mapping must end 0.3 m (20") before the echo of the actual level. In case of empty vessel it is possible to make a map over the whole probe length.

probe free
If the probe is uncovered, mapping is carried out along the whole probe length.

Caution!
Only begin mapping in this function if the probe is safely uncovered. Otherwise, the device will not make correct measurements!

Function "range of mapping" (052)

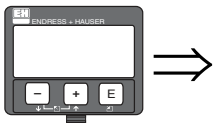



This function displays the suggested range of mapping. The reference point is always the reference point of the measurement (→ 📄 51). This value can be edited by the operator.
For manual mapping, the default value is 0,3 m.

Function "start mapping" (053)

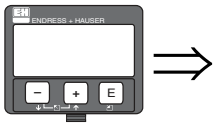



This function is used to start the interference echo mapping up to the distance given in "**range of mapping**" **(052)**.

Selection:
- **off**: no mapping is carried out
- on: mapping is started

Function "dist./meas.value" (008)

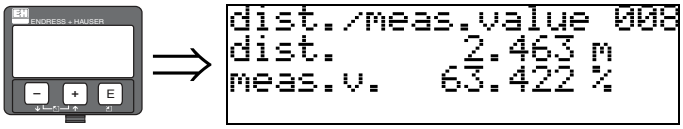

The distance measured from the reference point to the product surface and the meas. value calculated with the aid of the empty alignment are displayed again. Check whether the values correspond to the actual meas. value or the actual distance. The following cases can occur:

- Distance correct – meas. value correct → basic setup completed
- Distance correct – meas. value incorrect → check "**empty calibr**" **(005)**
- Distance incorrect – meas. value incorrect → a further interference echo mapping must be carried out "**check distance**" **(051)**.

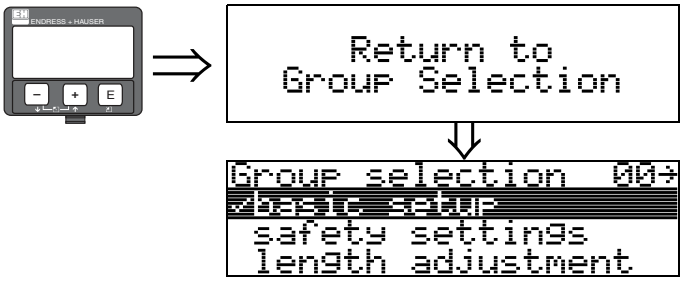

After 3 s, the following message appears

Note!
After the basic setup, an evaluation of the measurement with the aid of the envelope curve ("**envelope curve**" **(0E)** function group) is recommended (→ 63).

6.5 Blocking distance

Function "upper block. dist" (059)

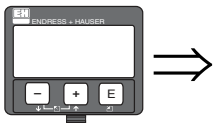

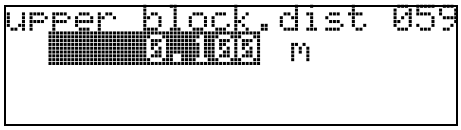

For rod probes and for rope probes with lengths of up to 8 m, the upper blocking distance is preset to 0.2 m on delivery. For rope probes with lengths of more than 8 m, the upper blocking distance is preset to 2.5 % of the probe length. For media with DC > 7, the upper blocking distance for rod and rope probes can be reduced to 0.1 m, if the probe is mounted flush with the wall or in a nozzle of maximum 50 mm.

Blocking distance and measuring range

At the lower end of the probe there is no blocking distance but a transition region with reduced accuracy, see section "Maximum measured error", → 62.

FMP40	LN [m] min	LN [m] max	UB [m] min
Rope probe	1	35[1)]	0,2 [2)]
6 mm rod probe	0,3		0,2[2)]
16 mm rod probe	0,3	4	0,2[2)]
Coax probe	0,3	4	0

1) Larger measuring range available on request.

2) The indicated blocking distances are preset. At media with DC > 7, the upper blocking distance UB can be reduced to 0.1 m for rod and rope probes. The upper blocking distance UB can be entered manually.

Note!
Within the upper and lower blocking distance, a reliable measurement can not be guaranteed.

For stilling well applications

The upper blocking distance (UB) is preset to 100 mm when the "bypass/pipe" parameter has been selected in the "**tank properties**" **(002)** function.

Maximum measured error

Typical statements for reference conditions:
DIN EN 61298-2, percentage of the span.

Output:	digital	analogue
sum of non-linearity, non-repeatability and hysteresis	measurig range: – up to 10 m: ±3 mm – > 10 m: ±0.03 % **for PA coated rope** measuring range: – up to 5 m: ±5 mm – > 5 m: ±0.1 %	±0.06 %
Offset / Zero	±4 mm	±0.03 %

If the reference conditions are not met, the offset/zero arising from the mounting situation may be up to ±12 mm. This additional offset/zero can be compensated for by entering a correction (function "**offset**" **(057)**) during commissioning.

Differing from this , the following measuring error is present in the vicinity of the probe end:

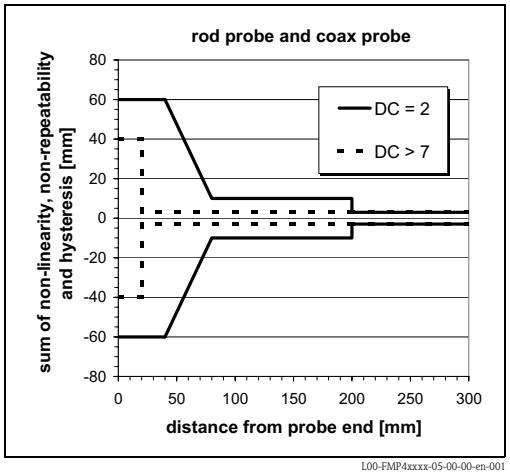

L00-FMP4xxxx-05-00-00-en-001

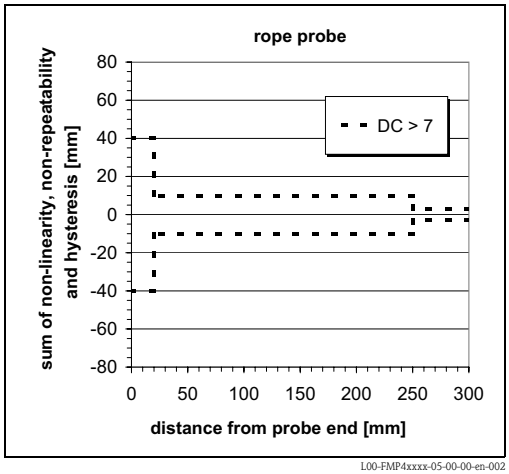

L00-FMP4xxxx-05-00-00-en-002

Note!
Please reenter the blocking distance in the function group "**extended calibr.**" **(05)** function "**upper block.dist**" **(059)** when installing the device in a high nozzle:
upper blocking distance (UB) = nozzle height (H) + 50 mm.

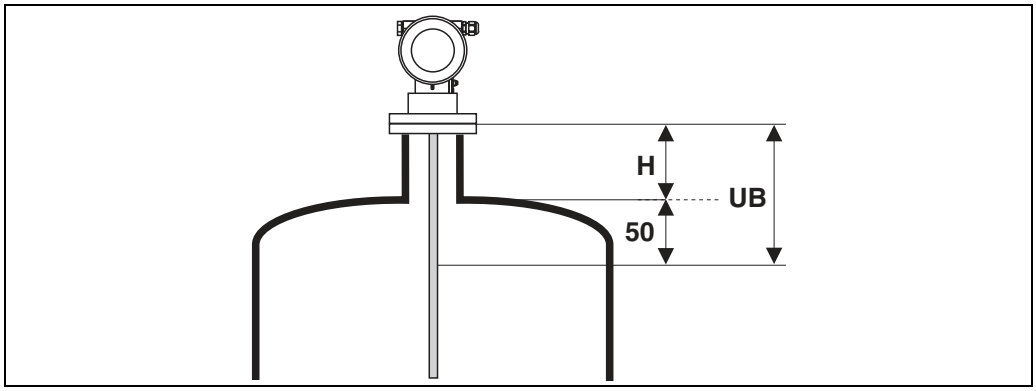

L00-FMP4xxxx-14-00-06-xx-001

6.6 Envelope curve with VU331

After the basic setup, an evaluation of the measurement with the aid of the envelope curve ("**envelope curve**" **(0E)**) function group) is recommended.

6.6.1 Function "plot settings" (0E1)

Here you can select which information is shown on the display:
- **envelope curve**
- substracted signal
- mapping

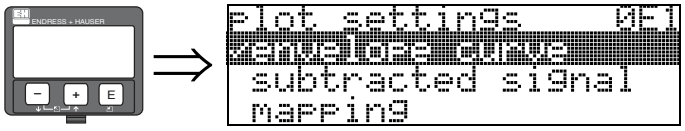

Note!
The interference echo suppression (map) are explained in BA00245F/00/EN "Description of Instrument Functions".

6.6.2 Function "recording curve" (0E2)

This function determines whether the envelope curve is read as
- **single curve** or
- cyclic



Note!
If the envelope curve mode is active on the display, the measured values are updated in a slower cycle time. Thus, it is advisable to leave the envelope curve mode after the measuring point has been optimised.

6.7 Function "envelope curve display" (0E3)

You can obtain the following information from the envelope curve display in this function:

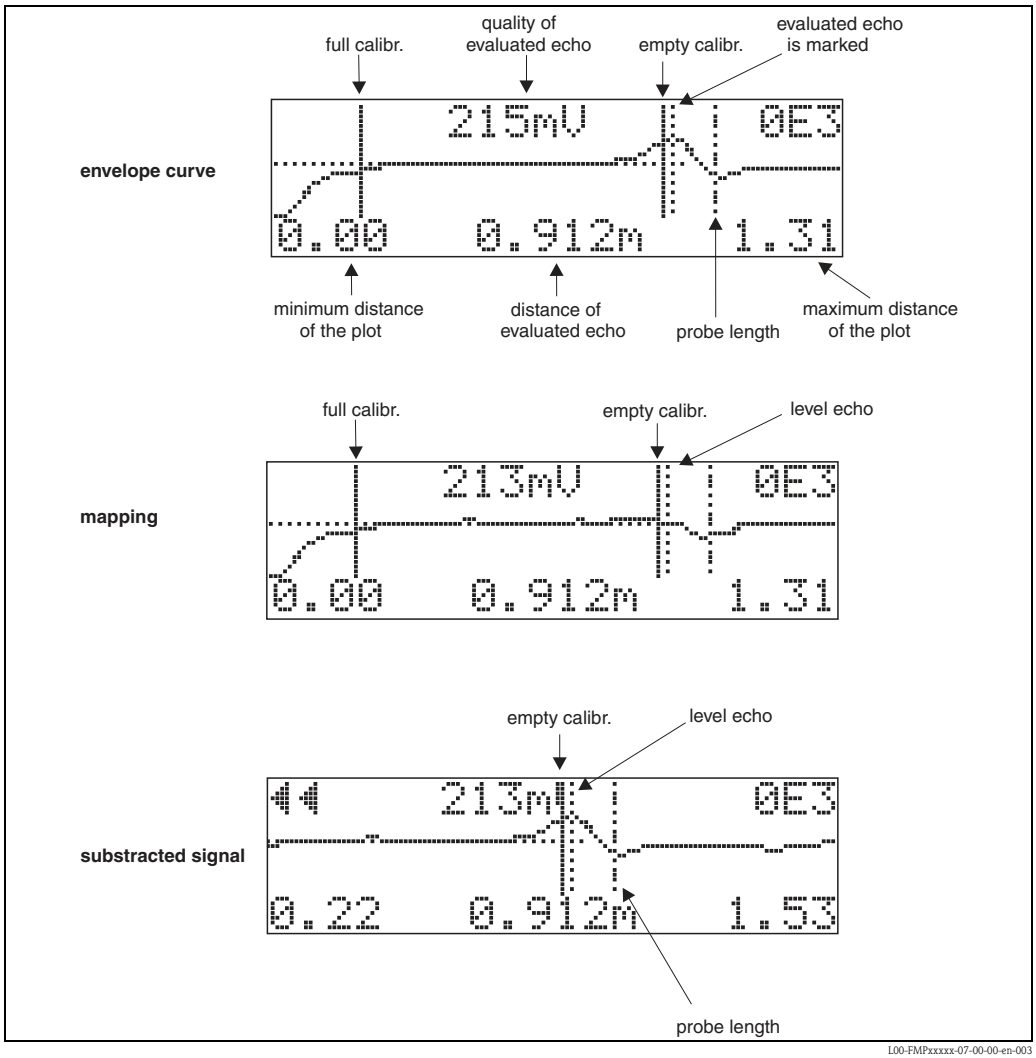

L00-FMPxxxxx-07-00-00-en-003

6.7.1 Envelope curve

The Levelflex emits individual pulses in quick succession and scans their reflection with a slightly variable delay. The energy values received are ordered by their time-of-flight. The graphic representation of this sequence is known as an "envelope curve".

6.7.2 Mapping (empty curve) and difference curve

To suppress interference signals, the envelope curve is not directly evaluated in the Levelflex.
The mapping (empty curve) is first subtracted from the envelope curve.
The system looks for level echoes in the resulting difference curve.
Difference curve = envelope curve - mapping (empty curve)
The mapping (empty curve) should be a good representation of the probe and the empty tank or silo. Ideally, only the signals from the medium being measured remain in the difference curve.

6.7.3 Mapping

- Factory mapping
  Mapping (empty curve) is already available in the device when the device is delivered.
- Customer mapping
  In a partially filled state, the distance up to 10 cm before the actual total level can be mapped (range of mapping = actual distance from total level - 10 cm), or values > LN can be mapped in the case of empty tanks.
- Dynamic mapping
  It is not static like factory and customer-specific interference echo suppression. Instead, it follows directly from static mapping and constantly adapts to the changing features of the probe environment during ongoing operation. Thus, dynamic mapping does not have to be recorded explicitly.

6.7.4 Echo threshold

Maximum points in the difference curve are only accepted as reflection signals if they are above a specified threshold. This threshold depends on the location and is automatically calculated from the ideal echo curve of the probe used. The calculation of the threshold in question depends on the "Installation" customer parameter in the extended calibration function.

6.7.5 Navigation in the envelope curve display

Using navigation, the envelope curve can be scaled horizontally and vertically and shifted to the left or the right. The active navigation mode is indicated by a symbol in the top left hand corner of the display.

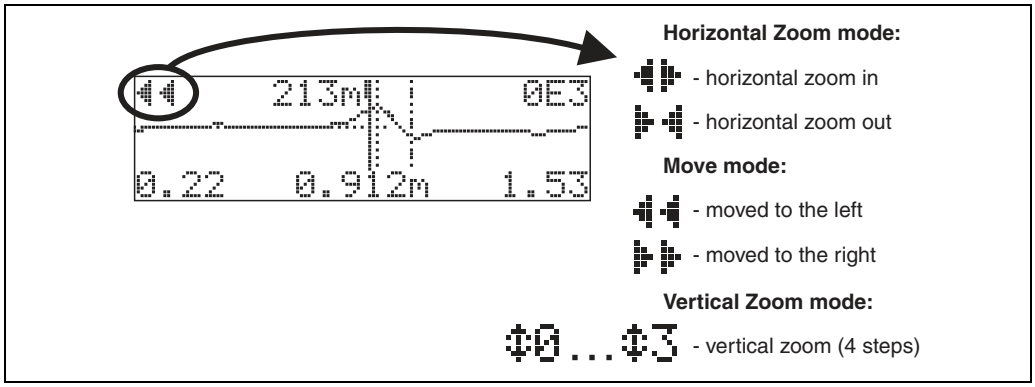

L00-FMPxxxxx-07-00-00-en-004

Horizontal-Zoom-Modus

Press [+] or [−], to switch to the envelope curve navigation. You are then in Horizontal Zoom mode. Either ◀▶ or ▶◀ is displayed.

You now have the following options:
- [+] increases the horizontal scale.
- [−] decreases the horizontal scale.

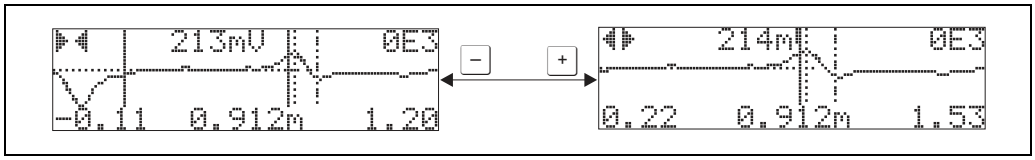

L00-FMPxxxxx-07-00-00-xx-001

Move-Modus

Then press [E], to switch to Move mode. Either ▶▶ or ◀◀ is displayed.

You now have the following options:
- [+] shifts the curve to the right.
- [−] shifts the curve to the left.

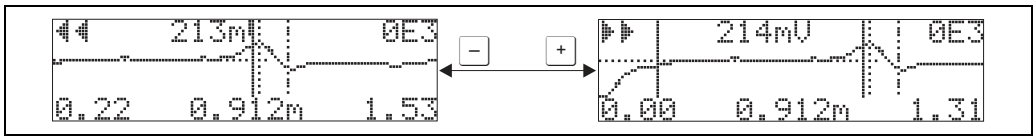

L00-FMPxxxxx-07-00-00-xx-002

Vertical-Zoom-Modus

Press [E], once more to switch to Vertical Zoom mode. ⇕1 is displayed.

You now have the following options:
- [+] increases the vertical scale.
- [−] decreases the vertical scale.

The display icon shows the current zoom factor (⇕0 to ⇕3).

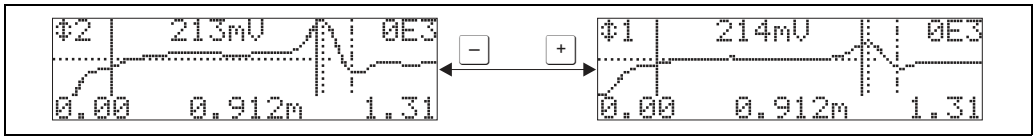

L00-FMPxxxxx-07-00-00-xx-003

Exiting the navigation

- Press [E] again to run through the different modes of the envelope curve navigation.
- Press [+] and [−] to exit the navigation. The set increases and shifts are retained. Only when you reactivate the "**recording curve**"**(0E2)** function does the Levelflex use the standard display again.

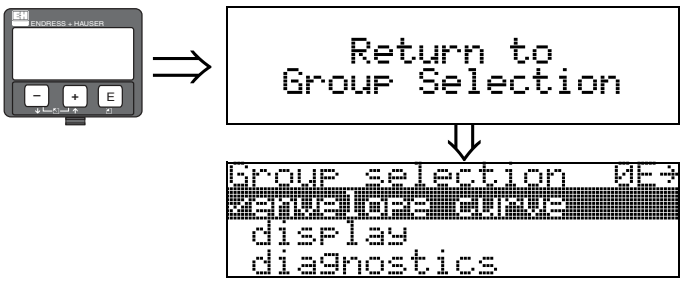

After 3 s, the following message appears

6.8 Basic setup with the Endress+Hauser operating program

To carry out the basic setup with the operating program, proceed as follows:
- Start the operating program and establish a connection.
- Select the **"basic setup"** function group in the navigation window.

The following display appears on the screen:

Basic setup step 1/6:
- Status image
- The TAG number can be entered.

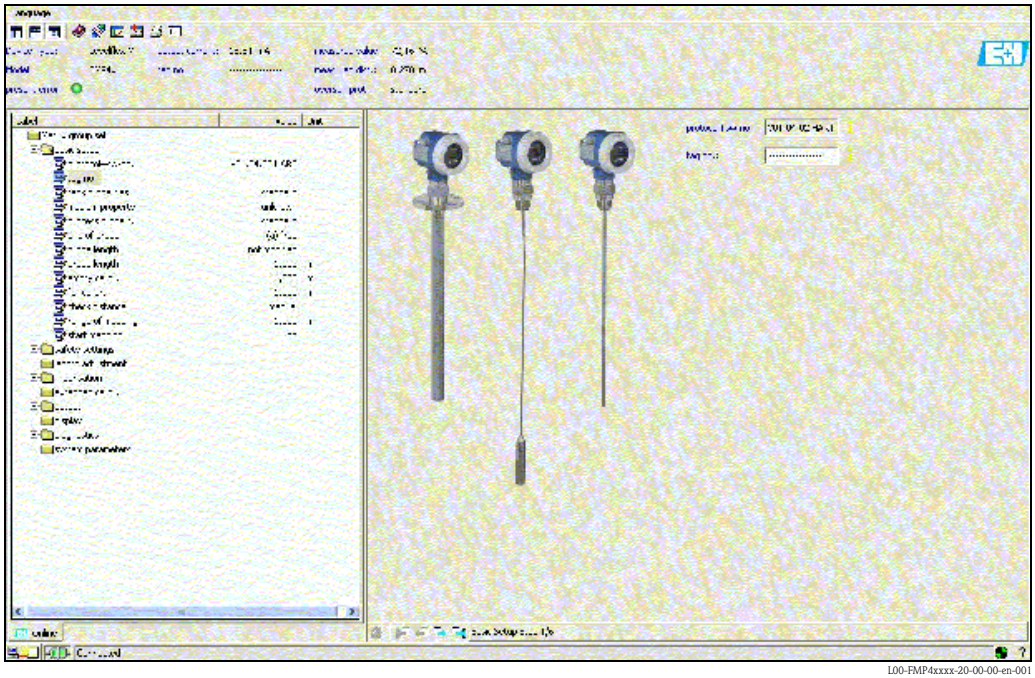

L00-FMP4xxxx-20-00-00-en-001

Note!
- Each parameter that is changed must be confirmed with the **RETURN** key!
- The "**Next**" button takes you to the next screen:

Basic setup step 2/6:

- Enter the application parameters (see chapter basic setup with "VU331"):
  - Tank properties
  - Medium properties
  - Process properties

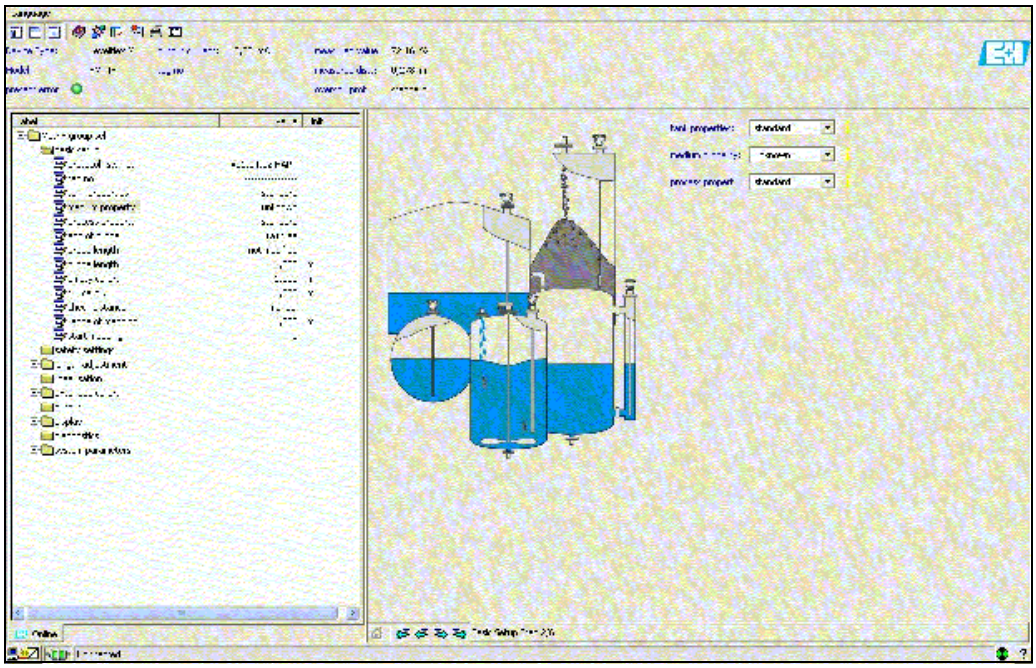

l00-fmp4xxxx-20-00-00-en-002

Basic setup step 3/6:

- Enter the application parameters (see chapter basic setup with "VU331"):
  - End of probe

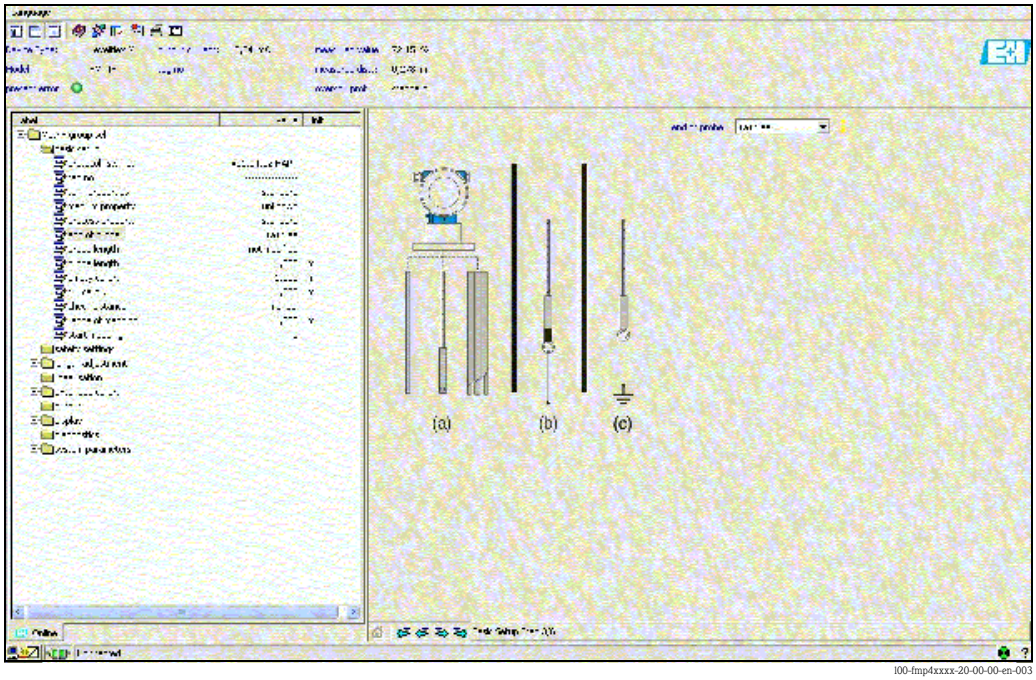

l00-fmp4xxxx-20-00-00-en-003

Basic setup step 4/6:

- Enter the application parameters (see chapter basic setup with "VU331"):
  - Probe length
  - Probe
  - Probe length
  - Determine length

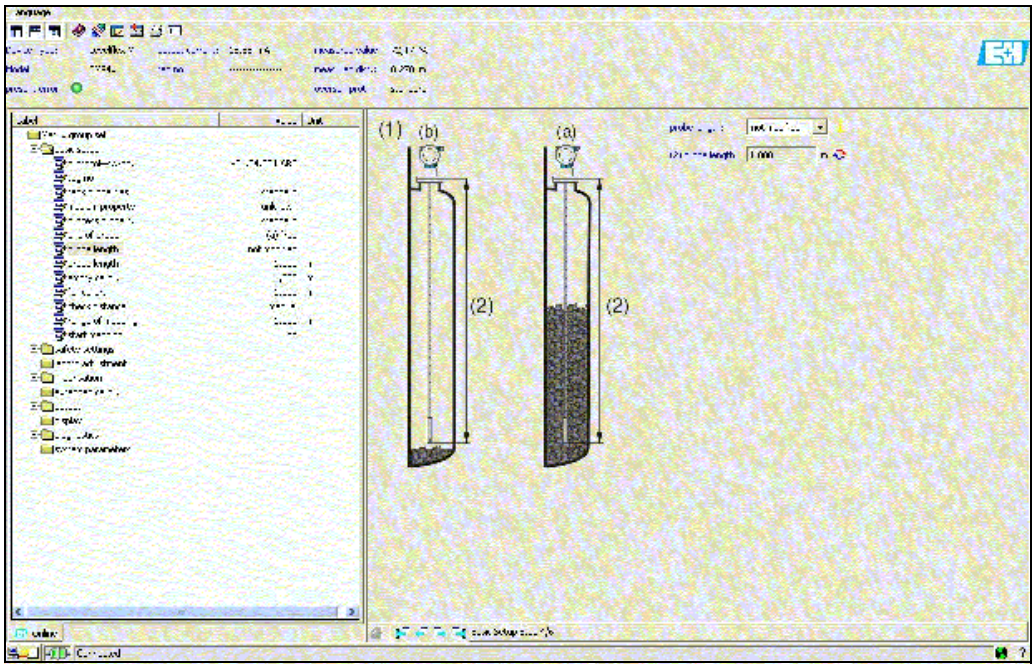

I00-fmp4xxxx-20-00-00-en-004

Basic setup step 5/6:

- Enter the application parameters (see chapter basic setup with "VU331"):
  - Empty calibration
  - Full calibration

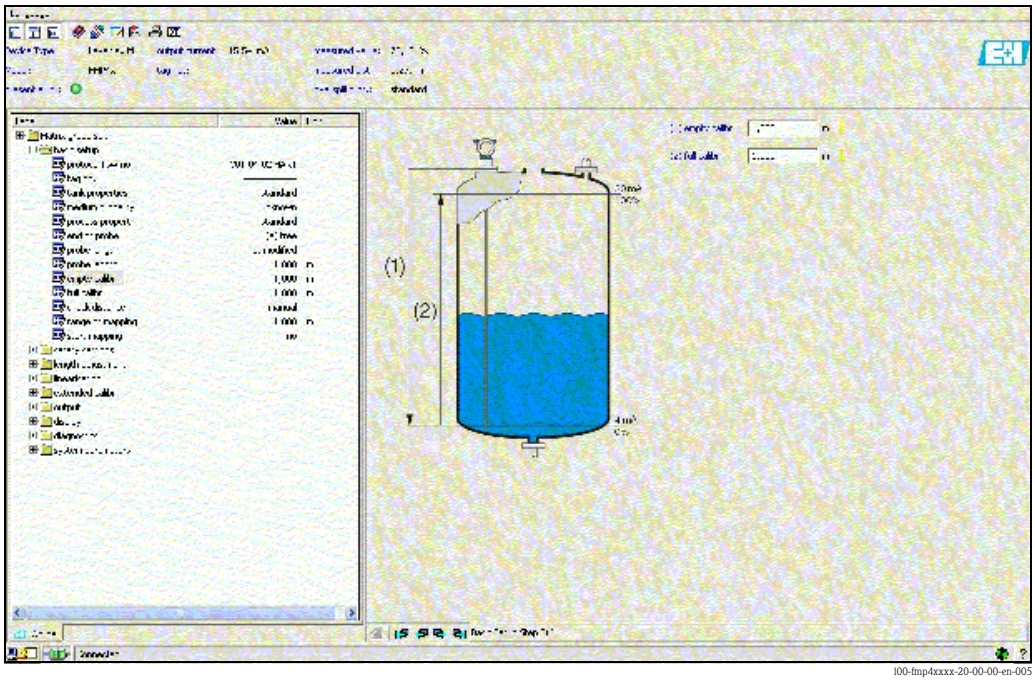

I00-fmp4xxxx-20-00-00-en-005

Basic setup step 6/6:
- Interference echo suppression takes place in this step
- The measured distance and the current measured value are always displayed in the header

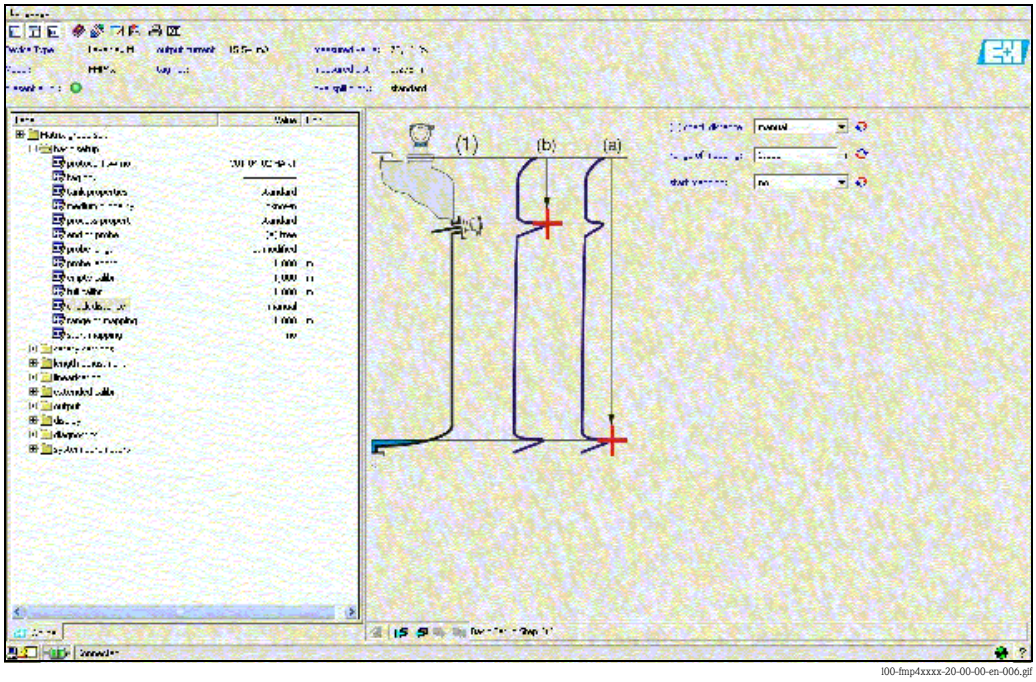

I00-fmp4xxxx-20-00-00-en-006.gif

6.8.1 Signal analysis via envelope curve

After the basic setup, it is recommended to evaluate the measurement with the aid of the envelope curve.

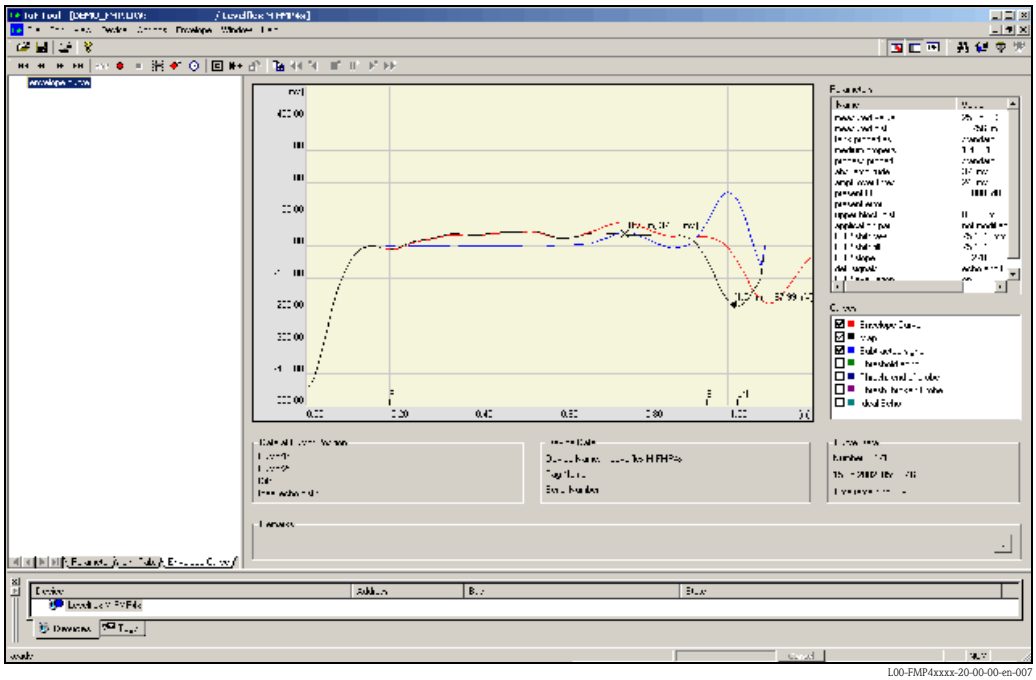
L00-FMP4xxxx-20-00-00-en-007

Note!
In the event of severe interference echoes, installing the Levelflex at another point can optimize the measurement routine.

Evaluating the measurement with the aid of the envelope curve

Typical curve shapes:

The following examples display typical curve shapes for a rope or rod probe in an empty tank. For all probe types, a negative probe end signal is shown. For rope probes, the end weight causes an additional preliminary positive echo (see rope probe diagram).

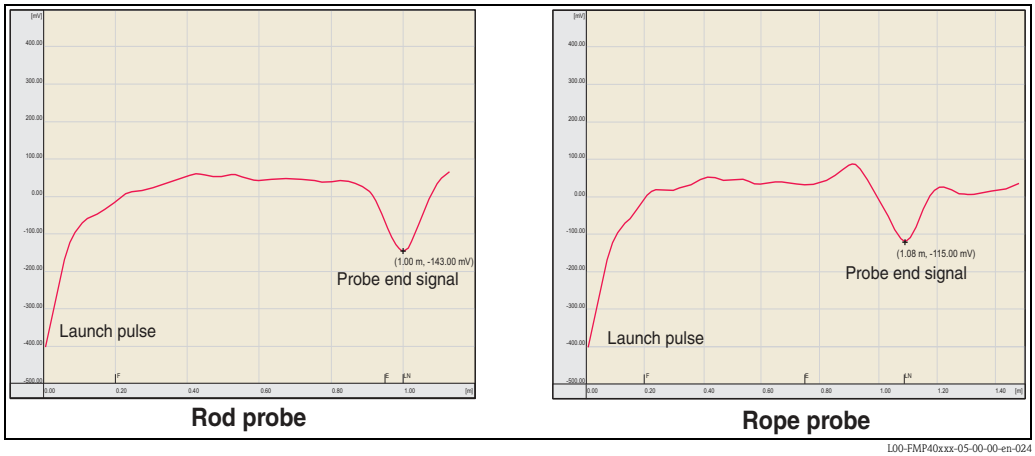

L00-FMP40xxx-05-00-00-en-024

Level echoes are indicated as positive signals in the envelope curve. Interference echoes can be both positive (e.g. reflections from internals) and negative (e.g. nozzles). The envelope curve, the map and the differential curve are used for the evaluation. Level echoes are searched for in the differential curve.

Evaluating the measurement:

- The map must correspond to the course of the envelope curve (for rod probes up to approx. 5 cm and for rope probes up to approx. 25 cm before the end of the probe) when the tank is empty.
- Amplitudes in the differential curve should be at a level of 0 mV when the tank is empty and lie within the span that is specified by the probe-specific blocking distances. In order to not detect any interference echoes, there must be no signals that exceed the echo threshold when the tank is empty.
- For partially-filled tanks, the map may only differ from the envelope curve at the position of the level echo. The level signal is then detected unequivocally as a positive signal in the differential curve. For detecting the level echo, the amplitude must lie above the echo threshold.

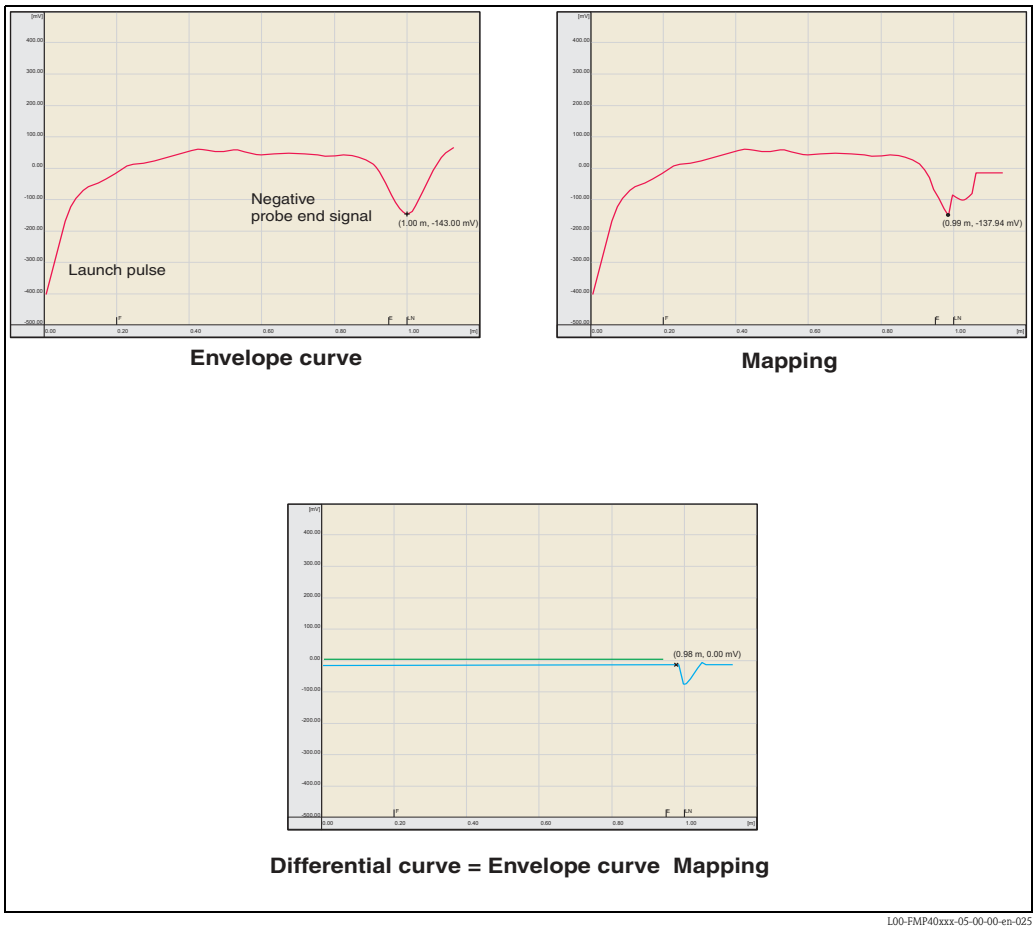

Envelope curve **Mapping**

Differential curve = Envelope curve Mapping

L00-FMP40xxx-05-00-00-en-025

6.8.2 User-specific applications (operation)

For details of setting the parameters of user-specific applications, see separate documentation BA00245F/00/EN "Description of Instrument Functions" on the enclosed CD-ROM.

7 Maintenance

The Levelflex M measuring device requires no special maintenance.

7.1 Exterior cleaning

When cleaning the Levelflex M , always use cleaning agents that do not attack the surface of the housing and the seals.

7.2 Repairs

The Endress+Hauser repair concept assumes that the measuring devices have a modular design and that customers are able to undertake repairs themselves ("Spare Parts", → 86). Please contact Endress+Hauser Service for further information on service and spare parts.

7.3 Repairs to Ex-approved devices

When carrying out repairs to Ex-approved devices, please note the following:
- Repairs to Ex-approved devices may only be carried out by trained personnel or by Endress+Hauser Service.
- Comply with the prevailing standards, national Ex-area regulations, safety instructions (XA) and certificates.
- Only use original spare parts from Endress+Hauser.
- When ordering a spare part, please note the device designation on the nameplate. Only replace parts with identical parts.
- Carry out repairs according to the instructions. On completion of repairs, carry our the specified routine test on the device.
- Only Endress+Hauser Service may convert a certified device into a different certified variant.
- Document all repair work and conversions.

7.4 Replacement

After a complete Levelflex M or electronic module has been replaced, the parameters can be downloaded into the device again via the communication interface. Prerequisite to this is that the data were uploaded to the PC beforehand using the FieldCare.
Measurement can continue without having to carry out a new setup.

- You may have to activate linearisation (see BA00245F/00/EN on the enclosed CD-ROM.)
- You may need to record the tank map again (see Basic Setup)

After an probe or electronic has been replaced, a new calibration must be carried out.
This is described in the repair instructions.

8 Accessories

Various accessories, which can be ordered separately from Endress+Hauser, are available for the Levelflex M.

8.1 Weather protection cover

A Weather protection cover made of stainless steel is recommended for outdoor mounting (order code: 543199-0001). The shipment includes the protective cover and tension clamp.

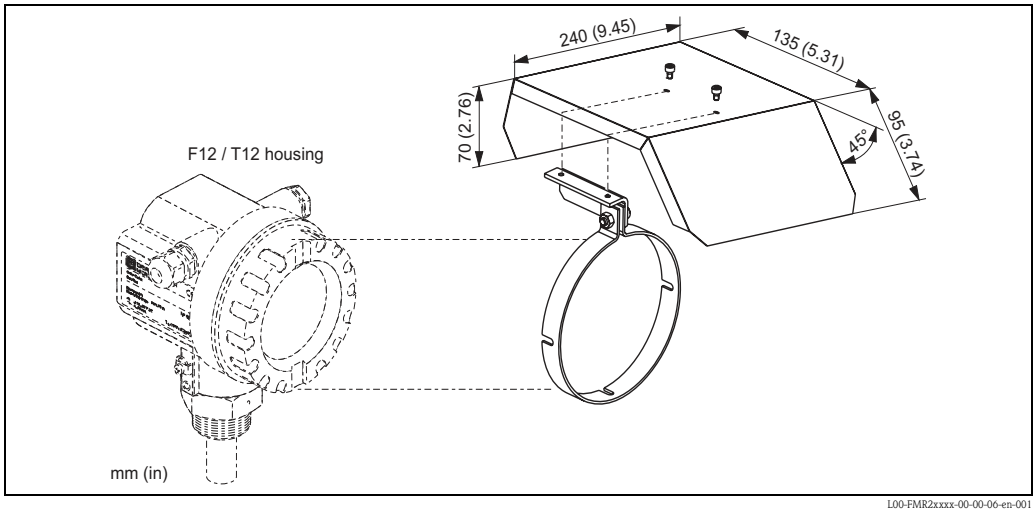

L00-FMR2xxxx-00-00-06-en-001

8.2 Flange with horn adapter to adapt on the following nozzles

Horn adapter	Order-No.
G1-1/2" at DN200 / PN16	52014251
G1-1/2" at DN250 / PN16	52014252
NPT1-1/2" at 8" / 150 psi	52014253
NPT1-1/2" at 10" / 150 psi	52014254
Material: 316L (1.4435)	

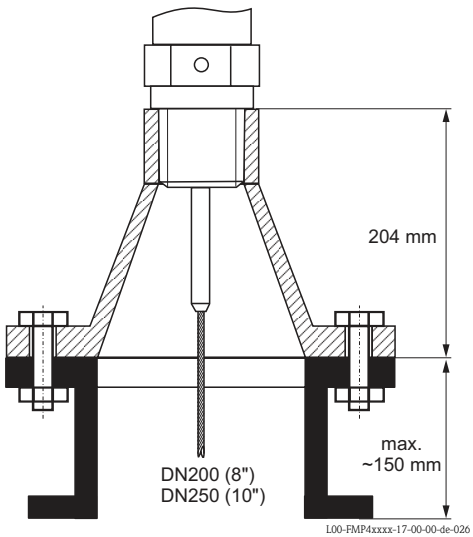

L00-FMP4xxxx-17-00-00-de-026

8.3 Remote display and operation FHX40

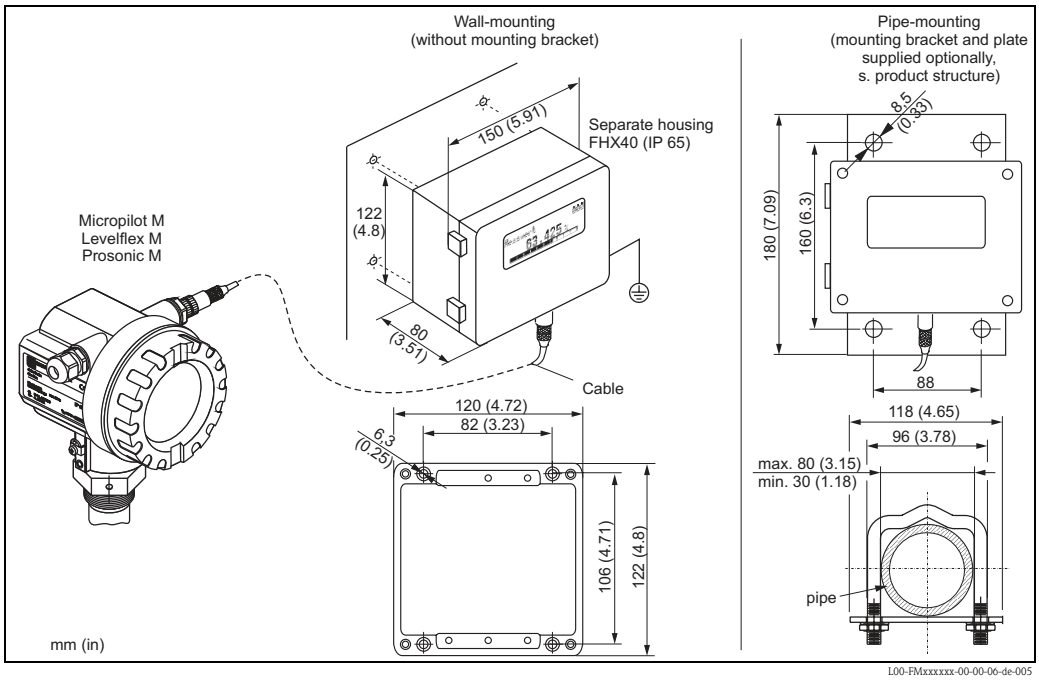

Technical data (cable and housing) and product structure:

Max. cable length	20 m (65 ft)
Temperature range	-30 °C to +70 °C (-22 °F to +158 °F)
Degree of protection	IP65/67 (housing); IP68 (cable) acc. to IEC 60529
Materials	Housing: AlSi12; cable glands: nickle plated brass
Dimensions [mm (in)]	122x150x80 (4.8x5.91x3.15) / HxWxD

010	**Approval:**			
	A			Non-hazardous area
	2			ATEX II 2G Ex ia IIC T6
	3			ATEX II 2D Ex ia IIIC T80°C
	G			IECEx Zone1 Ex ia IIC T6/T5
	S			FM IS Cl. I Div.1 Gr. A-D, zone 0
	U			CSA IS Cl. I Div.1 Gr. A-D, zone 0
	N			CSA General Purpose
	K			TIIS Ex ia IIC T6
	C			NEPSI Ex ia IIC T6/T5
	Y			Special version, TSP-Nr. to be spec.
020		**Cable:**		
		1		20m / 65ft: for HART
		5		20m / 65ft: for PROFIBUS PA/FOUNDATION Fieldbus
		9		Special version, TSP-Nr. to be spec.
030			**Additional option:**	
			A	Basic version
			B	Mounting bracket, pipe 1"/ 2"
			Y	Special version, TSP-Nr. to be spec.
FHX40 -				Complete product designation

For connection of the remote display FHX40 use the cable which fits the communication version of the respective device.

8.4 Centering disks

If the probes with rod version are used in stilling well or bypass, it must be ensured that the probe does not come into contact with the wall. The centering disk fixes the rod probe in the middle of the pipe.

8.4.1 Centering disk PEEK Ø 1.89 - 3.74 inch

The centering disk is suitable for probes with a rod diameter of Ø 0.63in and can be used in pipes from DN40 (1½") up to DN100 (4"). Markings on the 4-leg centering disk ensure a simple tailoring. Hence the centering disk can be adapted to the pipe diameter.
See also Operating Instruction BA00377F/00/EN.

- PEEK (statically dissipative)
- Measuring range: –60 °C to +250 °C

Order-no. 71069064

Note!
If the centering disk is inserted in an bypass, it must be positioned below the lower bypass outlet. The has to be accounted for when choosing the probe length.
Generally, the centering disk should not be mounted higher than 50 mm from the probe end.
It is recommended not to insert the PEEK centering disk in the measuring range of the rod probe.

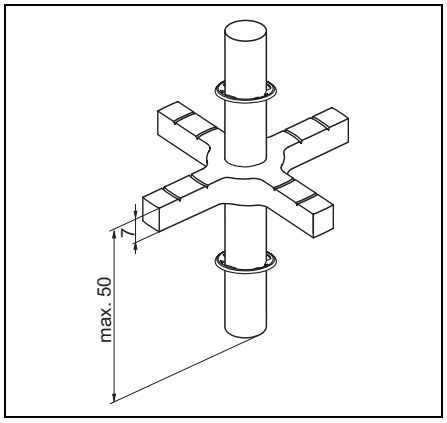

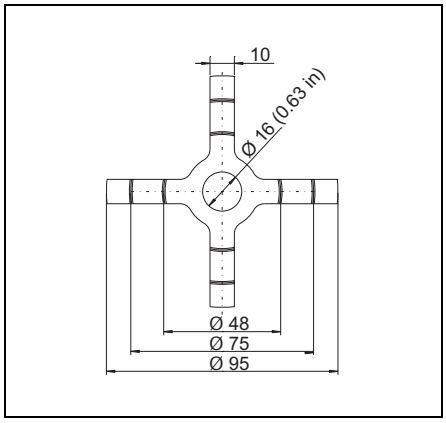

8.4.2 Centering disk PFA Ø 1.46 inch

The centering disk is suitable for probes with a rod diameter of 0.63 inch (also coated rod probes) and can be used in pipes from DN40 (1½") upto DN50 (2").
See also Operating Instruction BA00378F/00/EN.

- Measuring range: -200 °C to +150 °C

Order-no. 71069065

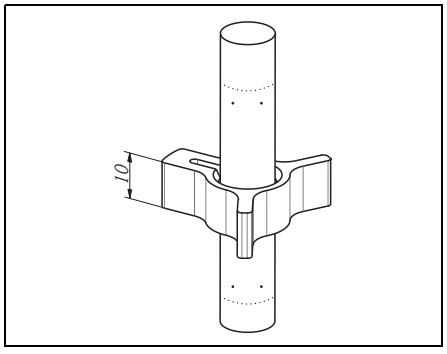

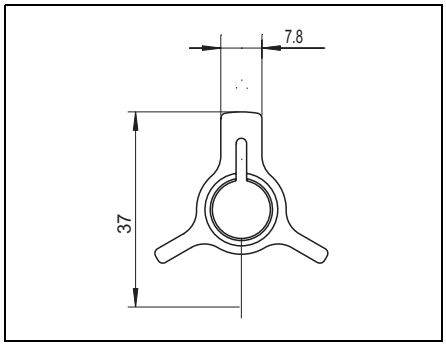

8.5 Commubox FXA195 HART

For intrinsically safe communication with FieldCare via the USB interface.
For details refer to TI00404F/00/EN.

8.6 Commubox FXA291

The Commubox FXA291 connects Endress+Hauser field devices with CDI interface (= Endress+Hauser Common Data Interface) to the USB interface of a personal computer or a notebook. For details refer to TI00405C/07/EN.



Note!
For the device you need the "ToF Adapter FXA291" as an additional accessory.

8.7 ToF Adapter FXA291

The ToF Adapter FXA291 connects the Commubox FXA291 via the USB interface of a personal computer or a notebook to the device. For details refer to KA00271F/00/A2.

8.8 Screw in flange FAX50

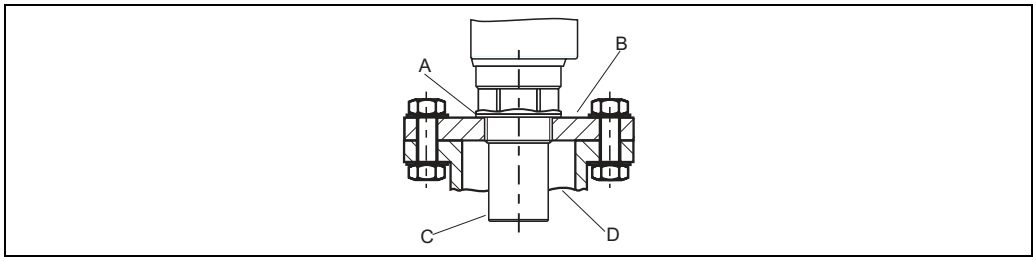

L00-FMU30xxx-00-00-00-xx-001

015	**Diameter; Material**		
	BR1	DN50 PN10/16 A, Steel, Flange EN1092-1	
	BS1	DN80 PN10/16 A, Steel, Flange EN1092-1	
	BT1	DN100 PN10/16 A, Stahl, Flansch EN1092-1	
	JF1	2" 150lbs FF, Steel, Flange ANSI B16.5	
	JG1	3" 150lbs FF, Steel, Flange ANSI B16.5	
	JH1	4" 150lbs FF, Steel, Flange ANSI B16.5	
	JK2	8" 150lbs FF, PP, max. 3bar abs / 44psia, Flange ANSI B16.5	
	XIF	UNI Flange 2"/DN50/50, PVDF, max. 3bar abs/44psia, suitable for 2" 150lbs/DN50 PN16/10K 50	
	XIG	UNI Flange 2"/DN50/50, PP, max. 3bar abs/44psia, suitable for 2" 150lbs/DN50 PN16/10K 50	
	XIJ	UNI Flange 2"/DN50/50, 316L, max. 3bar abs/44psia, suitable for 2" 150lbs/DN50 PN16/10K 50	
	XJF	UNI Flange 3"/DN80/80, PVDF, max. 3bar abs/44psia, suitable for 3" 150lbs/DN80 PN16/10K 80	
	XJG	UNI Flange 3"/DN80/80, PP, max. 3bar abs/44psia, suitable for 3" 150lbs/DN80 PN16/10K 80	
	XJJ	UNI Flange 3"/DN80/80, 316L, max. 3bar abs/44psia, suitable for 3" 150lbs/DN80 PN16/10K 80	
	XKF	UNI Flange 4"/DN100/100, PVDF, max. 3bar abs/44psia, suitable for 4" 150lbs/DN100 PN16/10K 100	
	XKG	UNI Flange 4"/DN100/100, PP, max. 3bar abs/44psia, suitable for 4" 150lbs/DN100 PN16/10K 100	
	XKJ	UNI Flange 4"/DN100/100, 316L, max. 3bar abs/44psia, suitable for 4" 150lbs/DN100 PN16/10K 100	
	XLF	UNI Flange 6"/DN150/150, PVDF, max. 3bar abs/44psia, suitable for 6" 150lbs/DN150 PN16/10K 150	
	XLG	UNI Flange 6"/DN150/150, PP, max. 3bar abs/44psia, suitable for 6"/DN150 PN16/10K 150	
	XLJ	UNI Flange 6"/DN150/150, 316L, max. 3bar abs/44psia, suitable for 6" 150lbs/DN150 PN16/10K 150	
	XMG	UNI Flange DN200/200, PP, max. 3bar abs/44psia, suitable for DN200 PN16/10K 200	
	XNG	UNI Flange DN250/250, PP, max. 3bar abs/44psia, suitable for DN250 PN16/10K 250	
	YYY	Special version, TSP-No. to be spec.	

020		**Sensor connection**	
		A	Thread ISO228 G3/4
		B	Thread ISO228 G1
		C	Thread ISO228 G1-1/2
		D	Thread ISO228 G2
		E	Thread ANSI NPT3/4
		F	Thread ANSI NPT1
		G	Thread ANSI NPT1-1/2
		H	Thread ANSI NPT2
		Y	Special version, TSP-No. to be spec.

FAX50			Complete product designation

8.9 Extension rod / Centering

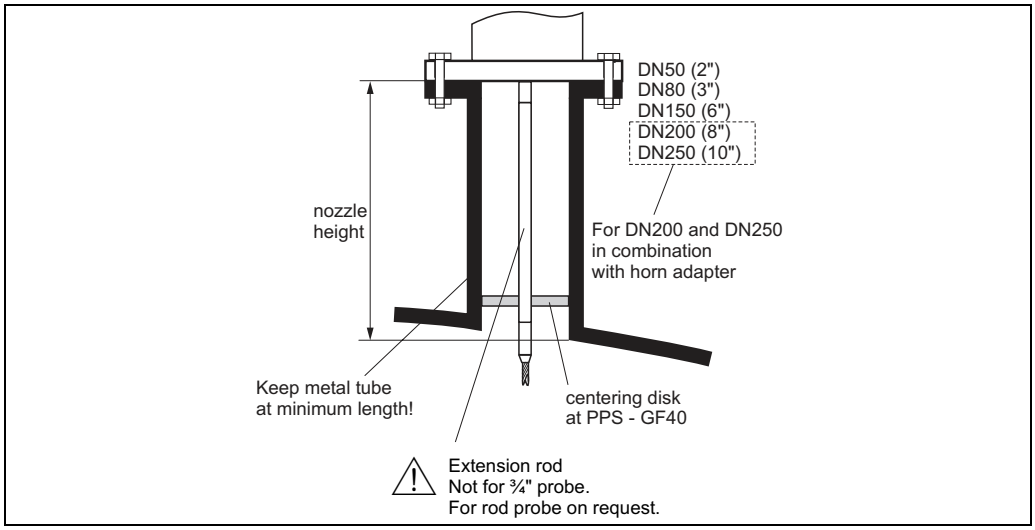

L00-FMP4xxxx-17-00-00-en-025

010	**Approval**				
	A	Non-hazardous area			
	M	FM DIP Cl.II Div.1 Gr. E-G N.I., zone 21, 22			
	P	CSA DIP Cl.II Div.1 Gr. G + Coal dust, N.I.			
	S	FM Cl.I, II, III Div.1 Gr. A-G, N.I., zone 0, 1, 2, 20, 21, 22			
	U	CSA Cl.I, II, III Div.1 Gr. A-G N.I., zone 0, 1, 2			
	1	ATEX II 1G			
	2	ATEX II 1D			
020		**Extension rod; Nozzle Height**			
		1	115mm; 150-250mm / 6-10"		
		2	215mm; 250-350mm / 10-14"		
		3	315mm; 350-450mm / 14-18"		
		4	415mm; 450-550mm / 14-22"		
		9	Special version, TSP-No. to be spec.		
030			**Center washer**		
			A	Not selected	
			B	DN40 / 1-1/2", inside-d.= 40-45mm, PPS	
			C	DN50 /2", inside-d.= 50-57mm, PPS	
			D	DN80 / 3", inside-d.= 80-85mm, PPS	
			E	DN80 / 3", inside-d.= 76-78mm, PPS	
			G	DN100 / 4", inside-d.= 100-110mm, PPS	
			H	DN150 / 6", inside-d.= 152-164mm, PPS	
			J	DN200 / 8", inside-d.= 210-215mm, PPS	
			K	DN250 / 10", inside-d.= 253-269mm, PPS	
			Y	Special version, TSP-No. to be spec.	
HMP40-					Complete product designation

8.10 Isolated tie down

Mounting-kit	Order - No.
for 4mm rope probe	52014249
for 6mm rope probe	52014250

If a rope probe has to be fixed and asecure grounded mounting is not possible, we recommend using the insulating sleeve made of PEEK-GF30 with accompanying DIN 580 eye-bolt made of stainless steel.
Max. process temp. 150 °C.

Due to the risk of electrostatic charge, theinsulating sleeve is not suitable for use inhazardous areas.In these cases the fixing must be reliably grounded (→ 🖹 27).

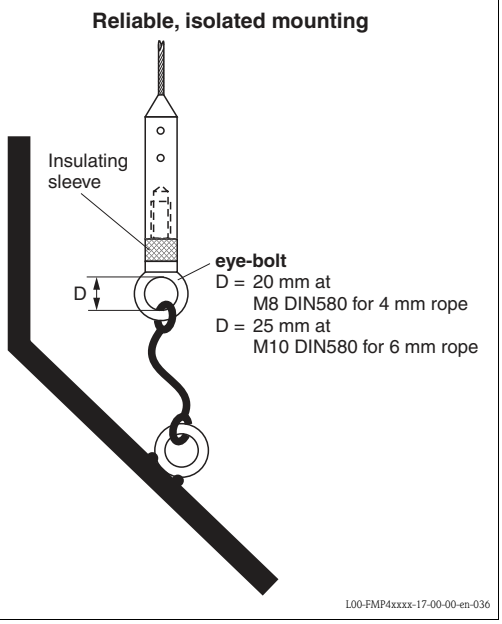

8.11 HART Loop Converter HMX50

The HART loop converter HMX50 can be acquired using the order number 71063562.
Additional documentation: TI00429F/00/EN and BA00371F/00/EN.

9 Trouble-shooting

9.1 Trouble-shooting instructions

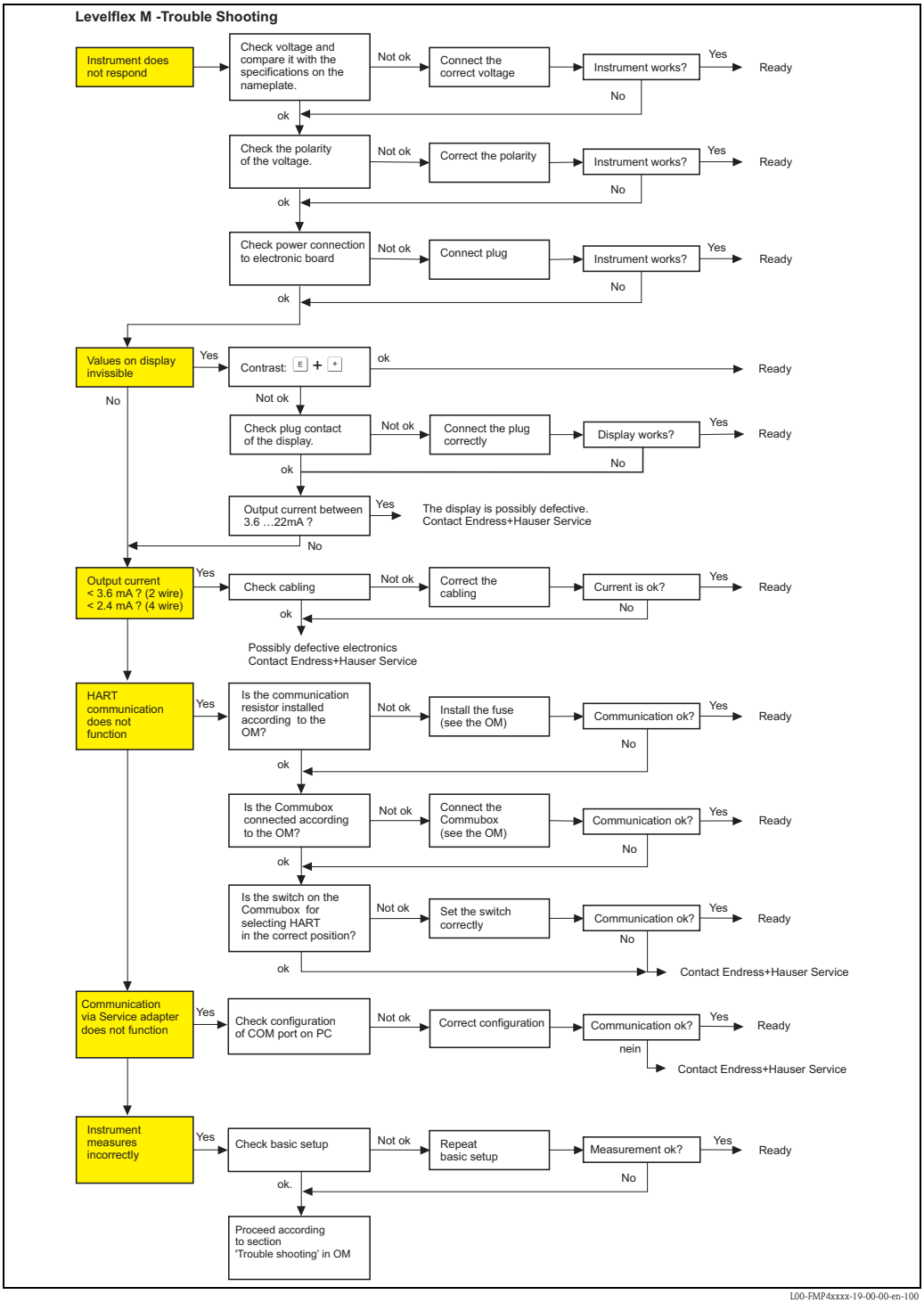

L00-FMP4xxxx-19-00-00-en-100

9.2 System error messages

Code	Description	Possible cause	Remedy
A102	checksum error general reset & new calibr. required	device has been powered off before data could be stored; emc problem; EEPROM defect	reset avoid emc problem; if alarm prevails after reset, exchange electronics
W103	initialising - please wait	EEPROM storage not yet finished	wait some seconds; if warning prevails, exchange electronics
A106	downloading please wait	processing data download	wait until warning disappears
A110	checksum error general reset & new calibr. required.	device has been powered off before data could be stored; emc problem; EEPROM defect	reset avoid emc problem; if alarm prevails after reset, exchange electronics
A111	electronics defect	RAM defective	reset if alarm prevails after reset, exchange electronics
A113	electronics defect	ROM defective	reset if alarm prevails after reset, exchange electronics
A114	electronics defect	EEPROM defective	reset if alarm prevails after reset, exchange electronics
A115	electronics defect	general hardware problem	Reset if alarm prevails after reset, exchange electronics
A116	download error repeat download	checksum of stored data not correct	restart download of data
A121	electronics defect	no factory calibration existant; EEPROM defective	contact service
W153	initialising - please wait	initialisation of electronics	wait some seconds; if warning prevails, power off device and power on again
A160	checksum error general reset & new calibr. required.	device has been powered off before data could be stored; emc problem; EEPROM defect	reset avoid emc problem; if alarm prevails after reset, exchange electronics
A164	electronics defect	hardware problem	reset if alarm prevails after reset, exchange electronics
A171	electronics defect	hardware problem	reset if alarm prevails after reset, exchange electronics
A221	Probe pulse deviation from average values	HF module or cable between HF module and electronics defective	Check contacts on HF module If fault cannot be eliminated: Replace HF module
A241	Broken probe	Broken probe or value for probe length is too long	Check the probe length in 033, Check the probe itself, if the probe is broken, change the probe, or change to a non contact system
		probe break monitoring enabled without mapping beforehand	disable probe break monitoring, perform mapping and then reactivate probe break monitoring

Code	Description	Possible cause	Remedy
A251	Feedthrough	Lost contact in the process feedthrough	Replace process feedtrough
A261	HF cable defective	HF cable defective or HF connector removed	Check HF connector, replace cable if defective
W275	Offset too high	Temperature at the electronics too high or HF module defective	Check temperature, replace HF module if defective
W512	recording of mapping please wait	mapping active	wait some seconds until alarm disappears
W601	linearisation ch1 curve not monotone	linearization not monotonously increasing	correct linearisation table
W611	less than 2 linearisation points for channel 1	number of entered linearization points < 2	correct linearisation table
W621	simulation ch. 1 on	simulation mode is active	switch off simulation mode
E641	no usable echo channel 1 check calibr.	echo lost due to application conditions of built up on antenna	check installation; clean probe (cf. Operating Instructions)
W650	Signal/noise ratio too low or no echo	noise on signal to high	eliminate electromagnetic interference
E651	level in safety distance - risk of overspill	level in safety distance	alarm will disappear as soon as level leaves safety distance
A671	linearisation ch1 not complete, not usable	linearisation table is in edit mode	activate linearisation table
W681	current ch1 out of range	current out of range (3.8 mA to 20.5 mA)	check calibration and linearisation

9.3 Application errors

Error	Output	Possible cause		Remedial action
A warning or alarm has occurred	Depending on the configuration	See table of error messages (→ 82)		1. See table of error messages (→ 82)
Measured value (00) is incorrect	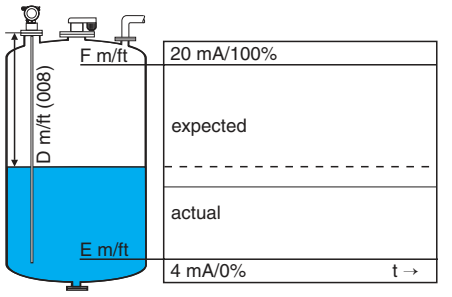 L00-FMP4xxxx-19-00-00-en-019	Measured distance (008) OK?	yes →	1. Check empty calibr. (005) and full calibr. (006) 2. Check linearisation: → level/ullage (040) → max. scale (046) → diameter vessel (047) → Check table
		no ↓		
		An interference echo may have been evaluated	yes →	1. Carry out tank mapping → basic setup
No change off measured value on filling/emptying	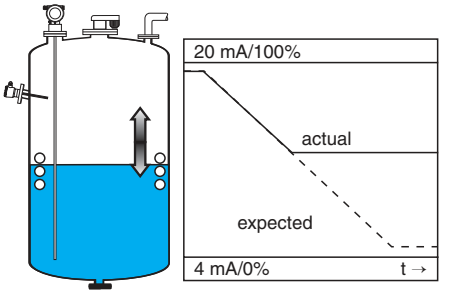 L00-FMR2xxxx-19-00-00-en-014	Interference echo from installations, nozzle or extension on the probe		1. Carry out tank mapping → basic setup 2. If necessary, clean probe 3. If necessary, select better mounting position
E641 (loss of echo) after turn on the power supply	**If the device is configured to Hold by loss of echo the output is set to any value/current.**	noise level during the initialisation phase to high		Repeat once more empty calibr. (005). Caution! Before conformation change with + or − to the edit mode.

Error	Output	Possible cause	Remedial action
Device displays a level when the tank is empty.	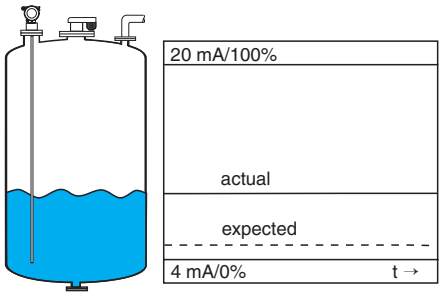	Incorrect probe length	1. Carry out automatic probe length detection when the tank is empty. 2. Carry out mapping over entire probe when the tank is empty (probe free!).
Measured value incorrect (slope error in the entire measuring range)	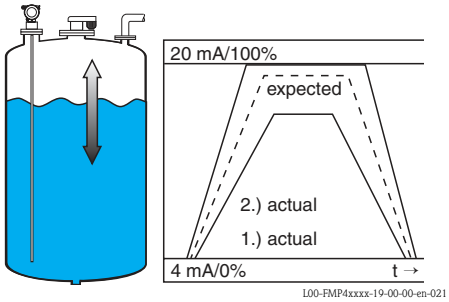	Tank properties incorrect Medium properties incorrect	LN < 4 m and "Aluminium tank" tank properties selected → Calibration not possible. → Selection → Select standard → Thresholds too high Select lower medium properties.

9.4 Spare Parts

An overview of the spare parts for your device is available in the internet at www.endress.com. To obtain information on the spare parts, proceed as follows:

1. Go to "www.endress.com" and select your country.
2. Click "Instruments".

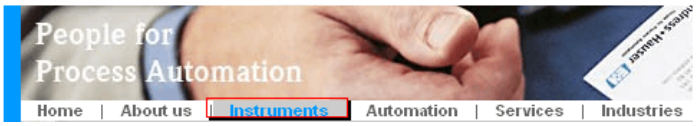

3. Enter the product name into the "product name" field.

Endress+Hauser product search

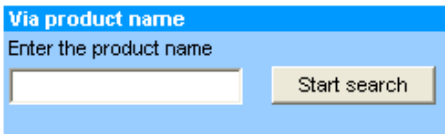

4. Select the device.
5. Click the "Accessories/Spare parts" tab.

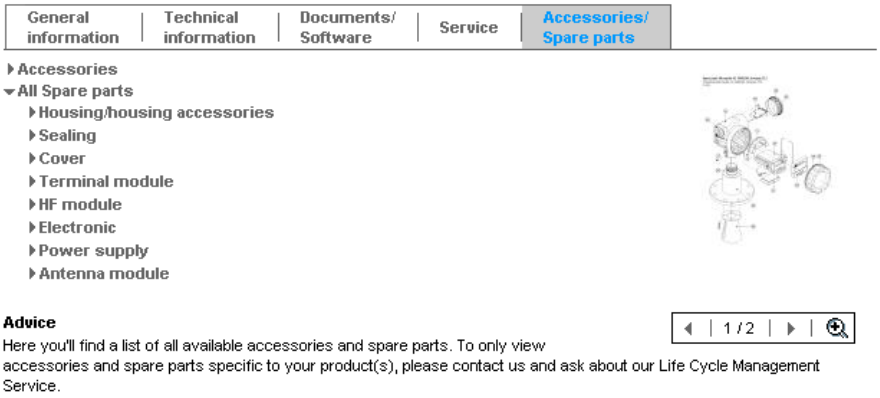

6. Select the required spare parts (You may also use the overview drawing on the right side of the screen.)

When ordering spare parts, always quote the serial number indicated on the nameplate. As far as necessary, the spare parts also include replacement instructions.

9.5 Return

The following procedures must be carried out before a transmitter is sent to Endress+Hauser e.g. for repair or calibration:

- Remove all residue which may be present. Pay special attention to the gasket grooves and crevices where fluid may be present. This is especially important if the fluid is dangerous to health, e.g. corrosive, poisonous, carcinogenic, radioactive, etc.
- Always enclose a duly completed "Declaration of contamination" form (a copy of the "Declaration of contamination" is included at the end of this operating manual).
  Only then can Endress +Hauser transport, examine and repair a returned device.
- Enclose special handling instructions if necessary, for example a safety data sheet as per EN 91/155/EEC.

Additionally specify:

- An exact description of the application
- The chemical and physical characteristics of the product
- A short description of the error that occurred (specify error code if possible)
- If necessary, give the error code

9.6 Disposal

In case of disposal please seperate the different components according to their material consistence.

9.7 Software history

Date	Software version	Software modifications	Dokumentation	Description of Instrument Functions
04.2004	01.02.00	Original software. Operated via: – ToF Tool – Commuwin II (ab Version 2.05.03) – HART-Communicator DXR375 mit Rev.1 , DD1.	BA242F/00/en/03.02 52011930 BA242F/00/en/06.02 52011930 BA242F/00/en/01.03 52011930 BA242F/00/en/02.03 52011930 BA242F/00/en/02.04 52011930	BA245F/00/en/03.02 52011936 BA245F/00/en/06.02 52011936 BA245F/00/en/02.03 52011936 BA245F/00/en/02.04 52011936
08.2003	01.02.02	■ Function group: envelope curve display ■ Katakana (japanese) ■ current turn down (HART only) ■ the customer tank map can be edited Operated via: – ToF Tool – Commuwin II (ab Version 2.08-1 Update C) – HART-Communicator DXR375 mit Rev.1 , DD1.	—	—
07.2004	01.02.04	■ "mapping" function improved ■ Specification of the measuring accuracy at the end of probe	BA242F/00/en/06.04 52011930 BA242F/00/en/01.06 52011930	BA245F/00/en/06.04 52011936 BA245F/00/en/01.06 52011936
01.2005	01.02.06	Function "echo lost" improved	—	—
03.2006	01.04.00	■ Function "detection window" ■ Description of Instrument Functions ■ Operating menu extended	BA242F/00/en/05.06 52011930 BA242F/00/en/11.06 52011930 BA242F/00/en/03.09 71074787 BA00242F/00/EN/13.10 71120266	BA245F/00/en/06.06 52011936

9.8 Contact addresses of Endress+Hauser

Contact addresses can be found on our homepage: www.endress.com/worldwide. If you have any questions, please do not hesitate to contact your Endress+Hauser representative.

10 Technical data

10.1 Additional technical data

10.1.1 Input

Measured variable	The measured variable is the distance between a reference point (see Fig., → 14) and the product surface. Subject to the input empty distance "E" (see Fig., → 51)the level is calculated. Alternatively, the level can be converted by means of linearisation (32 points) into other variables (volume, mass).

10.1.2 Output

Output signal	4 to 20 mA (invertible) with HART protocol.
Signal on alarm	Error information can be accessed via the following interfaces: ■ Local display: – Error symbol (→ 43) – Plain text display ■ Current output, signal on error can be selected (e.g. according to NAMUR recommendation NE43) ■ Digital interface
Linearization	The linearization function of the Levelflex M allows the conversion of the measured value into any unit of length or volume and mass or %. Linearization tables for calculating the volume in cylindrical tanks are preprogrammed. Other tables of up to 32 value pairs can be entered manually or semi-automatically. The creation of a linearization table with FieldCare is particularly convenient.

10.1.3 Performance characteristics

Reference operating conditions

- Temperature = +20 °C ±5 °C
- Pressure = 1013 mbar abs. ±20 mbar
- Humidity = 65 % ±20 %
- Reflection factor ≥ 0.8 (surface of the water for coax probe, metal plate for rod and rope probe with min. 1 m ∅)
- Flange for rod or rope probe ≥ 30 cm ∅
- Distance to obstructions ≥ 1 m

Maximum measured error

Is in Function group "basic setup" (00), → 53.

Resolution

- Digital: 1 mm
- Analog: 0.03 % of the measuring range

Reaction time

The reaction time is dependent on the configuration.

Shortest time:
- 2-wire electronics: 1 s
- 4-wire electronics: 0.7 s

Influence of ambiente temperature

The measurements are carried out in accordance with EN 61298-3:
- digital output:
  – average T_K: 0.6 mm/10 K, max. ±3.5 mm over the entire temperature range -40 °C to +80 °C

2-wire:
- Current output (additional error, in reference to the span of 16 mA):
- **Zero point (4 mA)**
  average T_K: 0.032 %/10 K, max. 0.35 % over the entire temperature range -40 °C to +80 °C
- **Span (20 mA)**
  average T_K: 0.05 %/10 K, max. 0.5 % over the entire temperature range -40 °C to +80 °C

4-wire:
- Current output (additional error, in reference to the span of 16 mA):
- **Zero point (4 mA)**
  average T_K: 0.02 %/10 K, max. 0.29 % over the entire temperature range -40 °C to +80 °C
- **Span (20 mA)**
  average T_K: 0.06 %/10 K, max. 0.89 % over the entire temperature range -40 °C to +80 °C

10.1.4 Operating conditions: Environment

Ambient temperature range

Ambient temperature for the transmitter: -40 °C to +80 °C. The functionality of the LCD display may be limited for temperatures Ta < -20 °C and Ta > +60 °C. A weather protection cover should be used for outdoor operation if the device is exposed to direct sunlight.

Ambient temperature limits

If temperatures above 80 °C are present at the process connection, the permitted ambient temperature is reduced according to the following diagram (temperature derating):

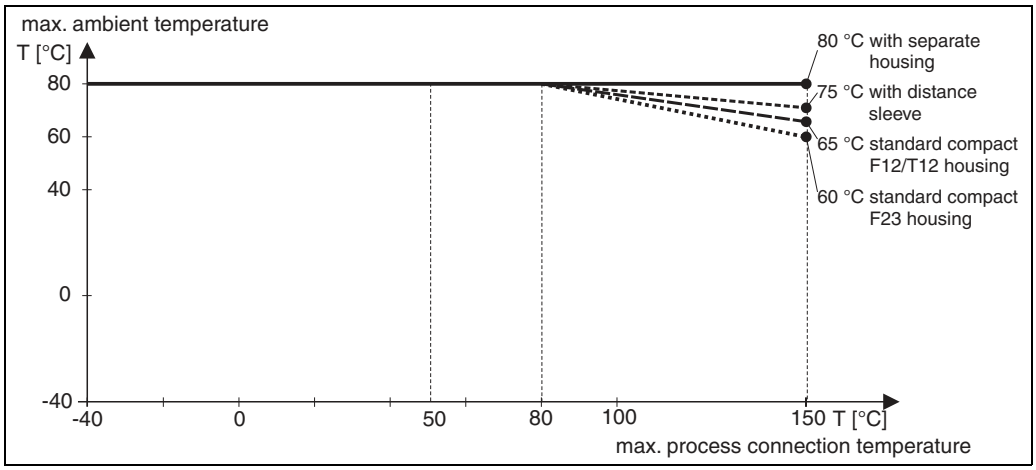

Storage temperature

-40 °C to +80 °C

Climate class

DIN EN 60068-2-38 (test Z/AD)

Vibration resistance

DIN EN 60068-2-64 / IEC 68-2-64: 20 to 2000 Hz, 1 $(m/s^2)^2/Hz$

Cleaning the probe

Depending on the application, contamination or build-up can accumulate on the probe. A thin, even layer only influences measurements slightly. Thick layers can dampen the signal and then reduce the measuring range. Severe, uneven build-up, adhesion e.g. through crystallization, can lead to incorrect measurement. In this case, we recommend that you use a non-contact measuring principle, or check the probe regularly for soiling.

Electromagnetic compatibility (EMC)

Electromagnetic compatibility to EN 61326 and NAMUR Recommendation EMC (NE21). Details are provided in the Declaration of Conformity. A standard installation cable is sufficient if only the analog signal is used. Use a shielded cable when working with a superimposed communications signal (HART).

When installing the probes in metal and concrete tanks and when using a coax probe:
- Interference emission to EN 61326 - x series, electrical equipment Class B.
- Interference immunity to EN 61326 - x series, requirements for industrial areas and NAMUR Recommendation NE21 (EMC).

The measured value can be affected by strong electromagnetic fields when installing rod and rope probes without a shielding/metallic wall, e.g. plastic, and in wooden silos.
- Interference emission to EN 61326 - x series, electrical equipment Class A.
- Interference Immunity: the measured value can be affected by strong electromagnetic fields.

10.1.5 Operating conditions: Process

Process temperature range

The maximum permitted temperature at the process connection (see Fig. for measuring point) is determined by the O-ring version ordered:

O-ring-material	min. Temperature	max. Temperature [1]	
FKM (Viton)	-30 °C (-22 °F)	+150 °C (302 °F)	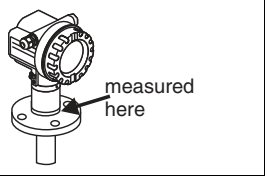
EPDM	-40 °C (-40 °F)	+120 °C (248 °F)	
FFKM (Kalrez)	-5 °C (23 °F) [2]	+150 °C (302 °F)	

1) For PA coated probes, the maximal admissible temperature ist 100 °C (212 °F).

2) The min. temperature of FFKM may be -15 °C (5 °F) if the max. temperature of +80 °C (176 °F) is not exceeded.

Note!
- The medium temperature can be higher.
  However, when using rope probes the stability of the probe rope is reduced by structural changes at temperatures over 350 °C.
- The bare metallic probes are only insulated in the area of the bushing. Thus there is no danger of electrostatic charging. The PA-coated rope has been tested and there is no dangerous electrostatic charging. As a result, there are no restrictions on use in Ex-areas for any of the probes.

Process pressure limits

All models: -1 to 40 bar.
The specified range may be reduced by the selected process connection. The pressure rating (PN) specified on the flanges refers to a reference temperature of 20 °C, for ASME flanges 100 °F. Observe pressure-temperature dependency.

Please refer to the following standards for the pressure values permitted for higher temperatures:
- EN 1092-1: 2001 Tab.18
  With regard to their temperature stability properties, the materials 1.4404 and 1.4435 are grouped under 13E0 in EN 1092-1 Tab. 18. The chemical composition of the two materials can be identical.
- ASME B 16.5a - 1998 Tab. 2-2.2 F316
- ASME B 16.5a - 1998 Tab. 2.3.8 N10276
- JIS B 2220

Note!
All Levelflex probes have two levels of sealing. There is an O-ring seal and a moulded seal behind that.

Dielectric constant

- with coax probe: $\varepsilon r \geq 1{,}4$
- Rod and rope probe: $\varepsilon r \geq 1{,}6$

Extension of the rope probes through tension and temperaturer

4 mm rope:
- Elongation through tension: at max. permitted tensile load (12 KN): 11 mm / m rope length
- Elongation through temperature increase from 30 °C to 150 °C: 2 mm / m rope length

6 mm rope:
- Elongation through tension: at max. permitted tensile load (30 KN): 13 mm / m rope length
- Elongation through temperature increase from 30 °C to 150 °C: 2 mm / m rope length

10.1.6 Mechanical construction

Material

Refer to TI00358F/00/EN, chapter "Material (not in contact with process)" and "Material (in contact with process)".

Tolerance of probe length

	Rod probes				Rope probes			
über (m (ft))		1 (3.2)	3 (9.8)	6 (20)		1 (3.2)	3 (9.8)	6 (20)
bis (m (ft))	1 (3.2)	3 (9.8)	6 (20)		1 (3.2)	3 (9.8)	6 (20)	
admissible tolerance (mm (in))	-5 (-0.2)	-10 (-0.4)	-20 (-0.8)	-30 (-1.2)	-10 (-0.4)	-20 (-0.8)	-30 (-1.2)	-40 (-1.6)

Weight

Levelflex M	**FMP40 + rope probe 4 mm**	**FMP40 + rod or rope probe 6 mm**	**FMP40 + rod probe 16 mm**	**FMP40 coax probe**
Weight for F12 or T12 housing	Approx. 4 kg + Approx. 0.1 kg/m probe length + weight of flange	Approx. 4 kg + Approx. 0.2 kg/m probe length + weight of flange	Approx. 4 kg + Approx. 1.6 kg/m probe length + weight of flange	Approx. 4 kg + Approx. 3.5 kg/m probe length + weight of flange
Weight for F23 housing	Approx. 7.4 kg + Approx. 0.1 kg/m probe length + weight of flange	Approx. 7.4 kg + Approx. 0.2 kg/m probe length + weight of flange	Approx. 7.4 kg + Approx. 1.6 kg/m probe length + weight of flange	Approx. 7.4 kg + Approx. 3.5 kg/m probe length + weight of flange

Process connection

See "Product structure", → 📄 6.

Seal

See "Product structure", → 📄 6.

Probe

See "Product structure", → 📄 6.

10.1.7 Certificates and approvals

CE mark	The measuring system meets the legal requirements of the applicable EC guidelines. These are listed in the corresponding EC Declaration of Conformity together with the standards applied. Endress+Hauser confirms successful testing of the device by affixing to it the CE mark.
Overfill protection	WHG. See "Product structure", → 🖹 6 (see ZE00256F/00/DE). SIL 2, for 4 to 20 mA output (see SD00174F/00/EN "Functional safety manual").
Telecommunications	Complies with "Part 15" of the FCC rules for an "Unintentional Radiator". All probes meet the requirements for a "Class A Digital Device". Coax probes and probes mounted in closed metallic vessels also meet the requirement for a "Class B Digital Device".
External standards and guidelines	The European directives and standards applied can be taken from the associated EC Declarations of Conformity. In addition, the following also applied for Levelflex M: EN 60529 Protection class of housing (IP-code) NAMUR – international user association of automation technology in process industries. ■ NE21 Electromagnetic compatibility (EMC) of industrial process and laboratory control equipment. ■ NE43 Standardization of the signal level for the failure information of digital transmitters.

Ex approval

The devices are certified for use in hazardous areas. The Safety Instructions to be observed are enclosed and referenced on the nameplate:

- Europe: EC type-examination certificate, Safety Instructions XA
- USA: FM Approval, Control Drawing
- Canada: CSA Certificate of Compliance, Control Drawing
- China: NEPSI Explosion Protection Certificate of Conformity, Safety Instructions XA
- Japan: TIIS Certificate for Ex-apparatus

Correlation of the certificates (XA, ZD, ZE) to the device:

Feature		Variant	ZE256F	ZE258F	ZD117F	ZD116F	ZD114F	ZD113F	ZD110F	ZD109F	ZD107F	ZD106F	ZD021F	ZD083F	ZD082F	ZD081F	ZD080F	ZD078F	ZD077F	ZD076F	ZD075F	XA388F	XA381F	XA380F	XA379F	XA378F	XA376F	XA218F	XA330F	XA217F	XA216F	XA215F	XA213F	XA211F	XA212F	XA173F	XA172F	XA168F	XA167F	XA166F	XA165F	XA164F
10 Approval:	Non-hazardous area	A																																							
	NEPSI Ex emb (ia) IIC T6	C																								X																
	Non-hazardous area, WHG	F	X																																							
	ATEX II 3G Ex nA II T6	G																										X														
	NEPSI Ex ia IIC T6	I																							X	X																
	NEPSI Ex d(ia) IIC T6	J																						X																		
	*TIIS Ex ia IIC T4	K																																							
	TIIS Ex d (ia) IIC T4	L																																							
	FM DIP Cl.II Div.1 Gr. E-G N.I.	M																X																							
	CSA General Purpose	N																																							
	CSA DIP Cl.II Div.1 Gr. G + coal dust, N.I.	P												X																											
	NEPSI DIP	Q																					X																		
	NEPSI Ex nA II T6	R																				X																			
	FM IS Cl.I,II,III Div.1 Gr. A-G N.I., zone 0, 1, 2	S							X	X	X	X	X							X	X																				
	FM XP Cl.I,II,III Div.1 Gr. A-G, zone 1, 2	T																	X																						
	CSA IS Cl.I,II,III Div.1 Gr. A-D, G + coal dust, N.I., zone 0, 1, 2	U			X	X	X	X								X	X																							
	CSA XP Cl.I,II,III Div.1 Gr. A-D, G + coal dust, N.I., zone 1, 2	V													X																										
	IEC Ex td A20/21, Alu blind cover	W																										X													
	IEC Ex tD A20/22	X																										X													
	ATEX II 1/2G Ex ia IIC T6 / IECEx zone 0/1	1																												X	X		X	X						X	X
	ATEX II 1/2D/IEC Ex td A20/21, Alu blind cover [1]	2																												X							X	X	X		
	ATEX II 2G Ex emb (ia) IIC T6 / IECEx zone 1	3																																					X		
	ATEX II 1/3D/ IEC Ex td A20/22 [1]	4																												X		X		X		X	X			
	ATEX II 1/2G Ex ia IIC T6, ATEX II 1/3D	5																												X		X				X				
	ATEX II 1/2G Ex ia IIC T6, WHG	6	X																												X	X		X	X					X	X
	ATEX II 1/2G Ex d (ia) IIC T6 / IEC Ex d (ia) IIC T6	7																																						X	
	ATEX II 1/2G Ex ia IIC T6, ATEX II 1/3D, WHG	8	X																											X		X				X				
60 Power supply Output:	2-wire 4-20mA SIL HART	B		X		X		X		X		X			X		X		X		X	X		X		X	X		X	X		X	X		X	X		X	X		X
	2-wire PROFIBUS PA	D		X	X		X		X		X		X		X	X			X	X		X		X	X	X		X	X	X		X		X	X	X	X		X	X	
	2-wire FOUNDATION Fieldbus	F		X	X		X		X		X		X		X	X			X	X		X		X	X	X		X	X	X		X		X	X	X	X		X	X	
	4-wire 90-250VAC 4-20mA SIL HART	G		X										X				X					X					X										X			
	4-wire 10.5-32VDC 4-20mA SIL HART	H		X										X				X					X					X										X			
	2-wire 4-20mA HART, Interface	K				X		X		X		X			X		X		X		X	X		X		X	X		X	X		X	X		X	X		X	X		X
70 Operation:	without display, via communication	1		X	X	X	X	X	X	X	X	X	X	X	X	X	X	X	X	X	X	X																				
	4-line display VU331	2		X	X	X	X	X	X	X	X	X	X	X	X	X	X	X	X	X	X	X																				
	applicable for FHX40	3					X	X			X	X	X	X	X	X	X	X	X	X	X																				
90 Housing, Cable entry:	F12 Alu, coated IP68 gland M20	A		X									X			X	X		X	X	X	X		X	X		X	X									X	X		X	X
	F12 Alu, coated IP68 thread G1/2	B											X	X		X	X	X	X	X	X	X		X	X		X										X	X		X	X
	F12 Alu, coated IP68 thread NPT1/2	C											X	X		X	X	X	X	X	X	X		X	X		X										X	X		X	X
	F12 Alu, coated IP68 Plug M12	D											X			X			X		X			X	X												X			X	X
	F12 Alu, coated IP68 Plug 7/8"	E											X			X			X		X			X	X												X			X	X
	T12 Alu, coated IP68 gland M20	G																						X			X								X	X		X	X		
	T12 Alu, coated IP68 thread G1/2	H													X			X						X			X								X	X		X	X		
	T12 Alu, coated IP68 thread NPT1/2	J													X			X						X			X								X	X		X	X		
	T12 Alu, coated IP68 Plug M12	K																																	X						
	T12 Alu, coated IP68 Plug 7/8"	L																																	X						
	T12 Alu, coated IP68 gland M20 + OV	M			X	X			X	X													X		X	X			X	X	X	X								
	T12 Alu, coated IP68 thread G1/2 + OV	N			X	X			X	X													X		X	X			X	X	X									
	T12 Alu, coated IP68 thread NPT1/2+OV	P			X	X			X	X													X		X	X			X	X	X									
	T12 Alu, coated IP68 Plug M12 + OVP	Q			X	X			X	X													X		X	X			X	X	X									
	T12 Alu, coated IP68 Plug 7/8" + OV	R			X	X			X	X													X		X	X			X	X	X									
	F23 316L IP68 gland M20	1					X	X			X	X	X										X		X	X		X				X	X	X							
	F23 316L IP68 thread G1/2	2					X	X			X	X	X										X		X	X						X	X	X							
	F23 316L IP68 thread NPT1/2	3					X	X			X	X	X										X		X	X						X	X	X							
	F23 316L IP68 Plug M12	4					X	X			X	X	X										X		X	X						X	X	X							
	F23 316L IP68 Plug 7/8"	5					X	X			X	X	X										X		X	X						X	X	X							

1) Housing F12/F23/T12-OVP: In combination with electronics B, D or F supply intrinsically safe.
** In preparation*

10.1.8 Additional documentation

Additional documentation

This additional documentation can be found on our product pages on www.endress.com
- Technical Information (TI00358F/00/EN)
- Safety Manual "Functional safety manual" (SD00174F/00/EN)
- Certificate "Allgemeine bauaufsichtliche Zulassung" (ZE00256F/00/DE)
- Brief operating instructions (KA01038F/00/EN)

11 Appendix

11.1 Operating menu HART (Display modul)

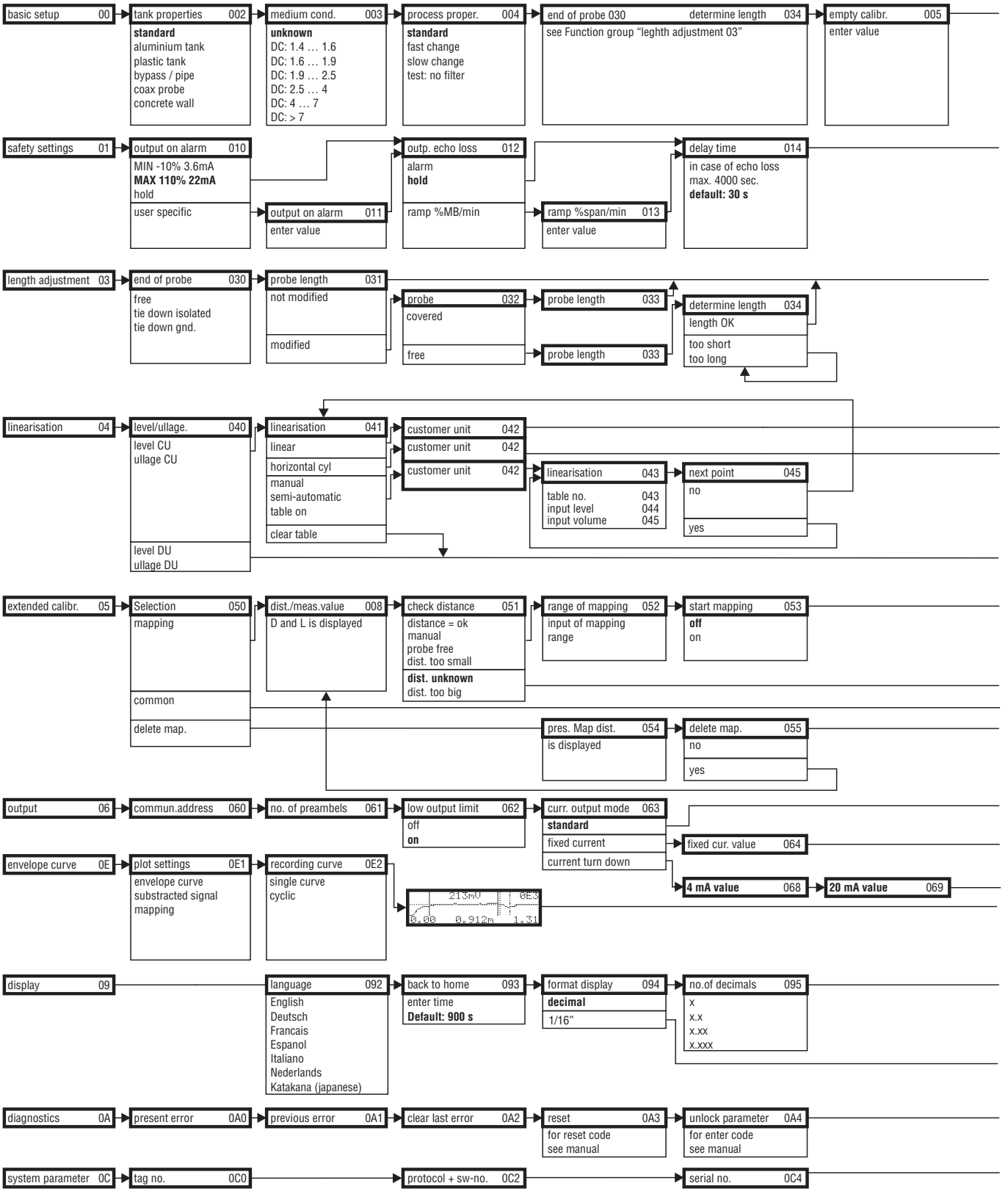

Note! The default values of the parameters are typed in boldface.

L00-FMP4xxxx-19-00-01-en-002

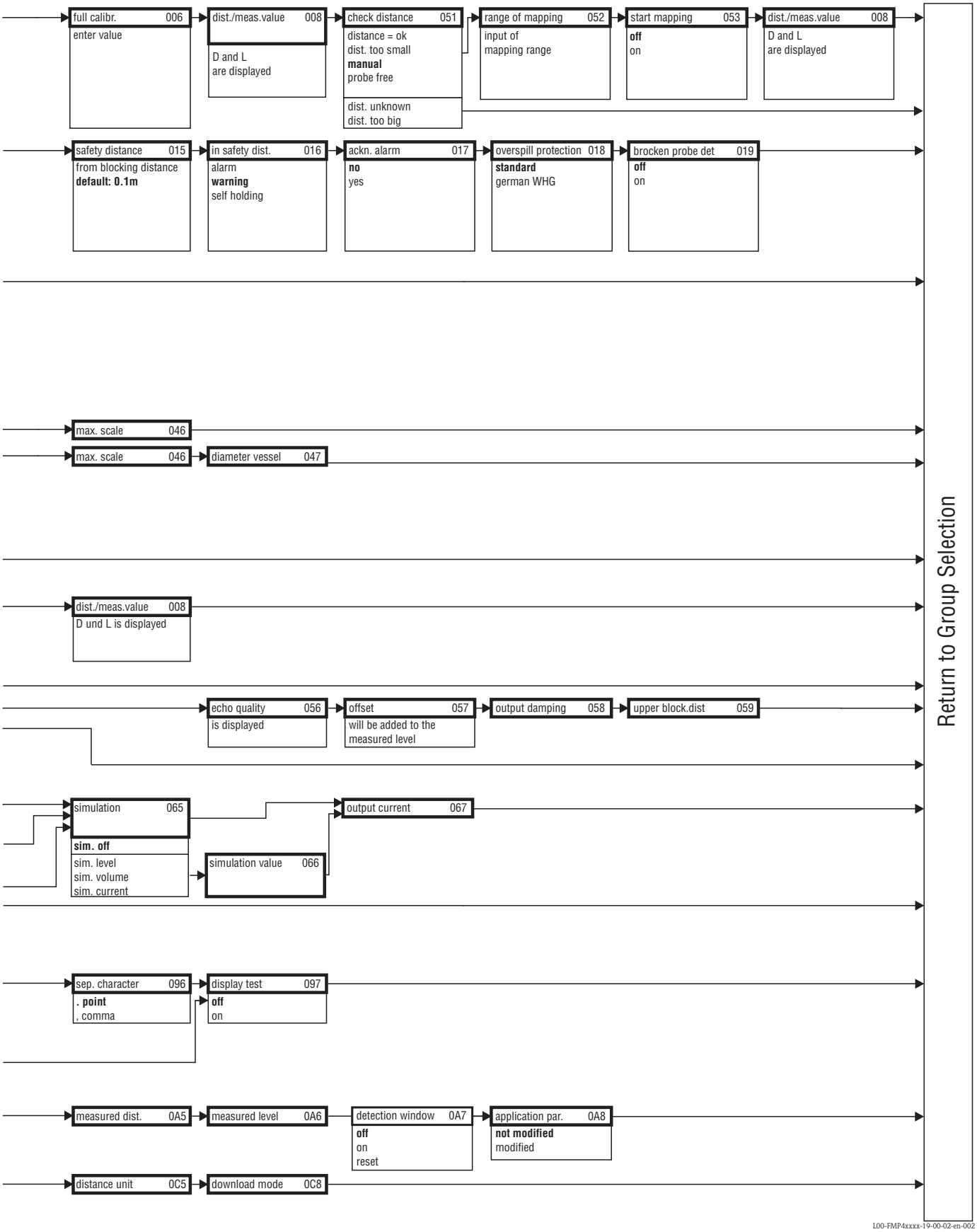
full calibr. 006
enter value
dist./meas.value 008
D and L
are displayed
check distance 051
distance = ok
dist. too small
manual
probe free
dist. unknown
dist. too big
range of mapping 052
input of
mapping range
start mapping 053
off
on
dist./meas.value 008
D and L
are displayed
safety distance 015
from blocking distance
default: 0.1m
in safety dist. 016
alarm
warning
self holding
ackn. alarm 017
no
yes
overspill protection 018
standard
german WHG
brocken probe det 019
off
on
max. scale 046
max. scale 046
diameter vessel 047
dist./meas.value 008
D und L is displayed
echo quality 056
is displayed
offset 057
will be added to the
measured level
output damping 058
upper block.dist 059
simulation 065
sim. off
sim. level
sim. volume
sim. current
simulation value 066
output current 067
sep. character 096
. point
, comma
display test 097
off
on
measured dist. 0A5
measured level 0A6
detection window 0A7
off
on
reset
application par. 0A8
not modified
modified
distance unit 0C5
download mode 0C8
Return to Group Selection
L00-FMP4xxxx-19-00-02-en-002

11.2 Patents

This product may be protected by at least one of the following patents.
Further patents are pending.

- US 5,661,251 ≙ EP 0 780 664
- US 5,827,985 ≙ EP 0 780 664
- US 5,884,231 ≙ EP 0 780 665
- US 5,973,637 ≙ EP 0 928 974

Index

A
Accessories 74
Alarm 47
Application errors 84

B
Basic Setup 51, 53
Blocking distance 61

C
CE mark 10
Centering disks 76
Commissioning 50
Commubox 38, 77
Connecting 38

D
declaration of conformity 10
Degree of protection 39
Designated use 4
Determine length 56, 69
Dimensions 13
Display 42

E
Empty calibration 57, 69
End of probe 68
Engineering hints 18, 24
Envelope curve 63
Equipotential bonding 39
Error messages 47, 82
Ex approval 95
Exterior cleaning 73

F
F12 housing 34
F23 housing 34
FHX40 75
Field Communicator 375, 475 38
FieldCare 38, 67
Full calibration 57

H
HART 36, 38, 48

I
Interference echo mapping 70

K
Key assignment 43

L
Lock 44

M
Maintenance 73
Medium properties 54, 68
Mounting 11

N
Nameplate 6

O
Operating menu 41
Operation 40, 44
Operational safety 4
Ordering structure 6

P
Probe 69
Probe length 69
Process propert 68
Process properties 55
process safety 4

R
Repairs 73
Repairs to Ex-approved devices 73
Replacement 73
Reset 46
Return 87
RMA422 38
RN221N 38

S
Safety conventions and symbols 5
Service Interface FXA291 77
Software history 88
Spare Parts 86
System error messages 82

T
T12 housing 35
Tank properties 68
Technical data 89
Terminal compartment 36
Trouble-shooting 81
Trouble-shooting instructions 81
Turn housing 33

U
Unlock parameter 45

V
VU331 63

W
Warning 47
weather protection cover 74
Wiring 34

Endress+Hauser

People for Process Automation

Declaration of Hazardous Material and De-Contamination

Erklärung zur Kontamination und Reinigung

RA No. ☐☐☐☐☐☐☐☐

Please reference the Return Authorization Number (RA#), obtained from Endress+Hauser, on all paperwork and mark the RA# clearly on the outside of the box. If this procedure is not followed, it may result in the refusal of the package at our facility.

Bitte geben Sie die von E+H mitgeteilte Rücklieferungsnummer (RA#) auf allen Lieferpapieren an und vermerken Sie diese auch außen auf der Verpackung. Nichtbeachtung dieser Anweisung führt zur Ablehnung ihrer Lieferung.

Because of legal regulations and for the safety of our employees and operating equipment, we need the "Declaration of Hazardous Material and De-Contamination", with your signature, before your order can be handled. Please make absolutely sure to attach it to the outside of the packaging.

Aufgrund der gesetzlichen Vorschriften und zum Schutz unserer Mitarbeiter und Betriebseinrichtungen, benötigen wir die unterschriebene "Erklärung zur Kontamination und Reinigung", bevor Ihr Auftrag bearbeitet werden kann. Bringen Sie diese unbedingt außen an der Verpackung an.

Type of instrument / sensor
Geräte-/Sensortyp _____

Serial number
Seriennummer _____

☐ **Used as SIL device in a Safety Instrumented System /** *Einsatz als SIL Gerät in Schutzeinrichtungen*

Process data/ *Prozessdaten*

Temperature / *Temperatur* _____ [°F] _____ [°C]
Pressure / *Druck* _____ [psi] _____ [Pa]
Conductivity / *Leitfähigkeit* _____ [µS/cm]
Viscosity / *Viskosität* _____ [cp] _____ [mm^2/s]

Medium and warnings
Warnhinweise zum Medium

	Medium /concentration *Medium /Konzentration*	Identification CAS No.	 flammable *entzündlich*	 toxic *giftig*	 corrosive *ätzend*	 harmful/ irritant *gesundheits-schädlich/ reizend*	 other * *sonstiges**	 harmless *unbedenklich*
Process medium / *Medium im Prozess*								
Medium for process cleaning / *Medium zur Prozessreinigung*								
Returned part cleaned with / *Medium zur Endreinigung*								

* explosive; oxidising; dangerous for the environment; biological risk; radioactive
* *explosiv; brandfördernd; umweltgefährlich; biogefährlich; radioaktiv*

Please tick should one of the above be applicable, include safety data sheet and, if necessary, special handling instructions.
Zutreffendes ankreuzen; trifft einer der Warnhinweise zu, Sicherheitsdatenblatt und ggf. spezielle Handhabungsvorschriften beilegen.

Description of failure / *Fehlerbeschreibung* _____

_____

_____

Company data / *Angaben zum Absender*

Company / *Firma* _____

_____

Address / *Adresse*

_____

_____

Phone number of contact person / *Telefon-Nr. Ansprechpartner:*

_____

Fax / E-Mail _____

Your order No. / *Ihre Auftragsnr.* _____

"We hereby certify that this declaration is filled out truthfully and completely to the best of our knowledge.We further certify that the returned parts have been carefully cleaned. To the best of our knowledge they are free of any residues in dangerous quantities."

"Wir bestätigen, die vorliegende Erklärung nach unserem besten Wissen wahrheitsgetreu und vollständig ausgefüllt zu haben. Wir bestätigen weiter, dass die zurückgesandten Teile sorgfältig gereinigt wurden und nach unserem besten Wissen frei von Rückständen in gefahrbringender Menge sind."

_____ (place, date / *Ort, Datum*)

_____ Name, dept./ *Abt.* (please print / *bitte Druckschrift*)

_____ Signature / *Unterschrift*

www.endress.com/worldwide

Endress+Hauser

People for Process Automation

BA00242F/00/EN/13.10
71120266
CCS/FM+SGML 6.0/ProMoDo

71120266