BA01577F/00/EN/04.23-00
71632854
2023-10-30

01.00.zz (Device firmware)

Operating Instructions
Micropilot FMR10

Free space radar

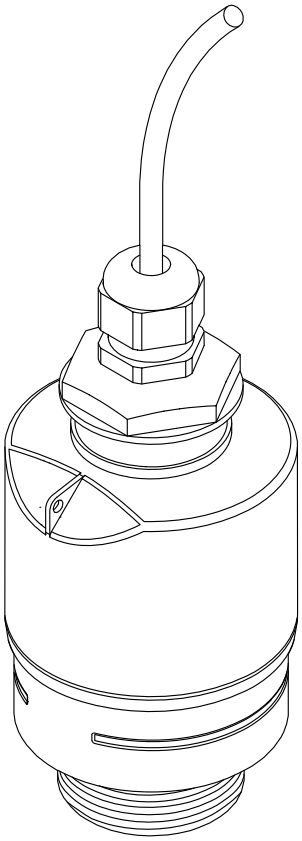

Endress+Hauser
People for Process Automation

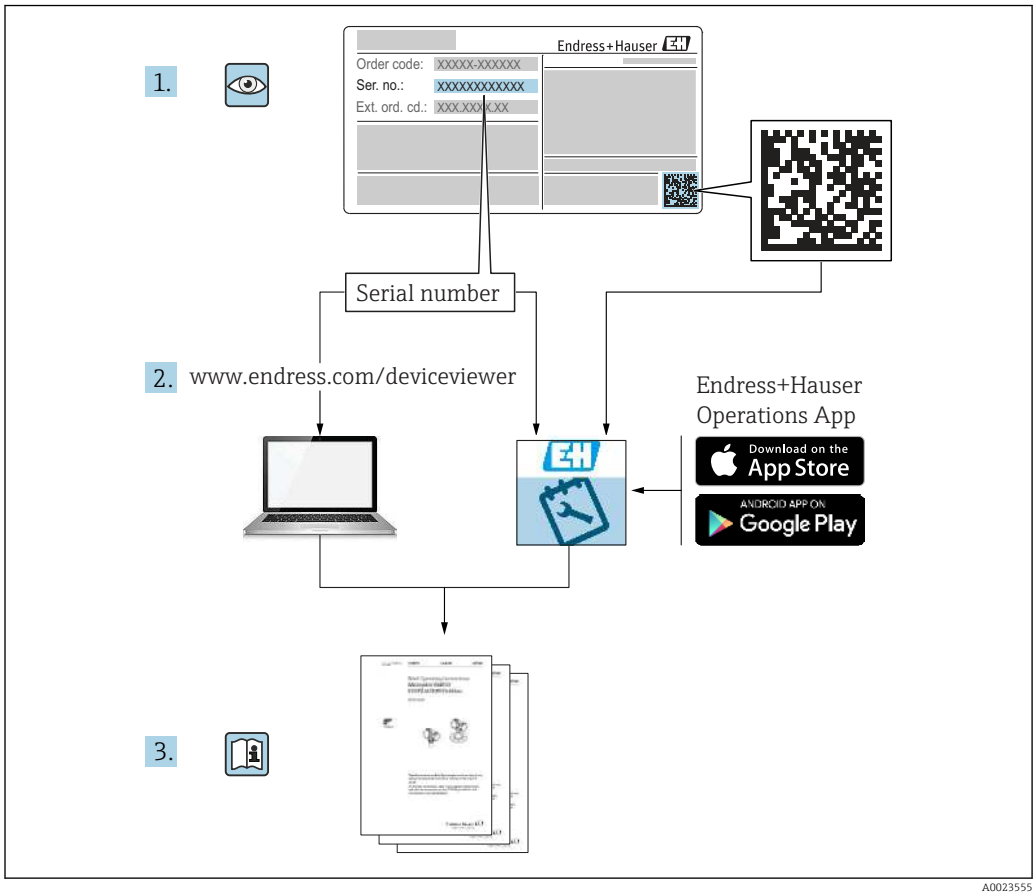
1.
Endress+Hauser
Order code: XXXXX-XXXXXX
Ser. no.: XXXXXXXXXXX
Ext. ord. cd.: XXX XXX XX
Serial number
2. www.endress.com/deviceviewer
Endress+Hauser
Operations App
Download on the App Store
ANDROID APP ON Google Play
3.
A0023555

Table of contents

1 About this document 5
1.1 Document function 5
1.2 Symbols used 5
1.2.1 Safety symbols 5
1.2.2 Symbols for certain types of information and graphics 5
1.3 Documentation 6
1.3.1 Technical Information (TI) 6
1.3.2 Brief Operating Instructions (KA) 6
1.3.3 Safety Instructions (XA) 6
1.4 Terms and abbreviations 7
1.5 Registered trademarks 7

2 Basic safety instructions 8
2.1 Requirements for personnel 8
2.2 Designated use 8
2.3 Workplace safety 9
2.4 Operational safety 9
2.5 Product safety 9
2.5.1 CE mark 9
2.5.2 EAC conformity 9

3 Product description 10
3.1 Product design 10
3.1.1 Micropilot FMR10 10

4 Incoming acceptance and product identification 11
4.1 Goods acceptance 11
4.2 Product identification 11
4.3 Manufacturer address 11
4.4 Nameplate 12

5 Installation 13
5.1 Installation conditions 13
5.1.1 Installation types 13
5.1.2 Nozzle mounting 13
5.1.3 Position for installation on a vessel . . 14
5.1.4 Device alignment for installation on a vessel 14
5.1.5 Beam angle 15
5.1.6 Measurement in plastic vessels 16
5.1.7 Weather protection cover 16
5.1.8 Use of flooding protection tube 17
5.1.9 Installation with mounting bracket, adjustable 17
5.1.10 Cantilever installation, with pivot 18
5.1.11 Installation of horizontal mounting bracket for sewer shafts 18
5.1.12 Mounting in a shaft 18
5.2 Post-installation check 19

6 Electrical connection 20
6.1 Cable assignment 20
6.2 Supply voltage 20
6.3 Connecting the device 21
6.4 Post-connection check 21

7 Operability 22
7.1 Operating concept 22
7.2 Operation via Bluetooth® wireless technology 22

8 Commissioning and operation 23
8.1 Installation and function check 23
8.1.1 Post-installation check 23
8.1.2 Post-connection check 23
8.2 Commissioning via SmartBlue (App) 23
8.2.1 Device requirements 23
8.2.2 SmartBlue system requirements 23
8.2.3 SmartBlue App 23
8.2.4 Envelope curve display in SmartBlue . 24
8.3 Data access - Security 25
8.3.1 Software locking via access code in SmartBlue 25
8.3.2 Unlocking via SmartBlue 25
8.3.3 Bluetooth® wireless technology 25

9 Diagnostics and troubleshooting . . . 27
9.1 General errors 27
9.2 Error - SmartBlue operation 27
9.3 Diagnostic event in the operating tool 28
9.4 List of diagnostic events 28

10 Maintenance 29
10.1 Cleaning the antenna 29
10.2 Process seals 29

11 Repair 30
11.1 General information 30
11.1.1 Repair concept 30
11.1.2 Replacing a device 30
11.1.3 Return 30
11.1.4 Disposal 30

12 Accessories 31
12.1 Device-specific accessories 31
12.1.1 Protective cover 31
12.1.2 Securing nut G 1-1/2" 31
12.1.3 Flooding protection tube 40 mm (1.5 in) 33
12.1.4 Mounting bracket, adjustable 34
12.2 FAX50 screw-in flange 35

12.3 Angle bracket for wall mounting 36
12.4 Cantilever with pivot 37
12.4.1 Installation type sensor process connection rear side 37
12.4.2 Installation type sensor process connection front side 38
12.4.3 Mounting frame (short) for cantilever with pivot 41
12.4.4 Mounting frame (long) for cantilever with pivot 41
12.4.5 Wall bracket for cantilever with pivot 42
12.5 Ceiling mounting bracket 43
12.6 Pivoted mounting bracket for sewer channel . . 44
12.7 Horizontal mounting bracket for sewer shafts 45
12.8 Service-specific accessories 46

13 Operating menu 47

13.1 Overview of the operating menu (SmartBlue) . 47
13.2 "Setup" menu 50
13.2.1 "Advanced setup" submenu 54
13.2.2 "Communication" submenu 64
13.3 "Diagnostics" submenu 65
13.3.1 "Device information" submenu 67
13.3.2 "Simulation" submenu 69

Index 70

1 About this document

1.1 Document function

These Operating Instructions provide all of the information that is required in various phases of the life cycle of the device including:
- Product identification
- Incoming acceptance
- Storage
- Installation
- Connection
- Operation
- Commissioning
- Troubleshooting
- Maintenance
- Disposal

1.2 Symbols used

1.2.1 Safety symbols

⚠ DANGER
This symbol alerts you to a dangerous situation. Failure to avoid this situation will result in serious or fatal injury.

⚠ WARNING
This symbol alerts you to a dangerous situation. Failure to avoid this situation can result in serious or fatal injury.

⚠ CAUTION
This symbol alerts you to a dangerous situation. Failure to avoid this situation can result in minor or medium injury.

NOTICE
This symbol contains information on procedures and other facts which do not result in personal injury.

1.2.2 Symbols for certain types of information and graphics

✓ **Permitted**
Procedures, processes or actions that are permitted

✗ **Forbidden**
Procedures, processes or actions that are forbidden

Tip
Indicates additional information

Reference to documentation

Reference to graphic

▶
Notice or individual step to be observed

1., 2., 3.
Series of steps

Result of a step


Operation via operating tool


Write-protected parameter

1, 2, 3, ...
Item numbers

A, B, C, ...
Views

1.3 Documentation

The following documentation types are available in the Downloads area of the Endress +Hauser website (www.endress.com/downloads):

For an overview of the scope of the associated Technical Documentation, refer to the following:
- *W@M Device Viewer* (www.endress.com/deviceviewer): Enter the serial number from nameplate
- *Endress+Hauser Operations App*: Enter the serial number from the nameplate or scan the 2D matrix code (QR code) on the nameplate

1.3.1 Technical Information (TI)

Planning aid
The document contains all the technical data on the device and provides an overview of the accessories and other products that can be ordered for the device.

1.3.2 Brief Operating Instructions (KA)

Guide that takes you quickly to the 1st measured value
The Brief Operating Instructions contain all the essential information from incoming acceptance to initial commissioning.

1.3.3 Safety Instructions (XA)

Depending on the approval, the following Safety Instructions (XA) are supplied with the device. They are an integral part of the Operating Instructions.

The nameplate indicates the Safety Instructions (XA) that are relevant to the device.

1.4 Terms and abbreviations

BA
Document type "Operating Instructions"

KA
Document type "Brief Operating Instructions"

TI
Document type "Technical Information"

XA
Document type "Safety Instructions"

PN
Nominal pressure

MWP
MWP (Maximum working pressure/max. process pressure)
The MWP can also be found on the nameplate.

ToF
Time of Flight

ε_r (Dk value)
Relative dielectric constant

Operating tool

The term "operating tool" is used in place of the following operating software:
SmartBlue (app), for operation using an Android or iOS smartphone or tablet

BD
Blocking Distance; no signals are analyzed within the BD.

PLC
Programmable logic controller (PLC)

1.5 Registered trademarks

Apple®
Apple, the Apple logo, iPhone, and iPod touch are trademarks of Apple Inc., registered in the U.S. and other countries. App Store is a service mark of Apple Inc.

Android®
Android, Google Play and the Google Play logo are trademarks of Google Inc.

Bluetooth®
The *Bluetooth*® word mark and logos are registered trademarks owned by the Bluetooth SIG, Inc. and any use of such marks by Endress+Hauser is under license. Other trademarks and trade names are those of their respective owners.

2 Basic safety instructions

2.1 Requirements for personnel

The personnel for installation, commissioning, diagnostics and maintenance must fulfill the following requirements:
- Trained, qualified specialists must have a relevant qualification for this specific function and task.
- Personnel must be authorized by the plant owner/operator.
- Be familiar with federal/national regulations.
- Before starting work: personnel must read and understand the instructions in the manual and supplementary documentation as well as the certificates (depending on the application).
- Personnel must follow instructions and comply with general policies.

The operating personnel must fulfill the following requirements:
- Personnel are instructed and authorized according to the requirements of the task by the facility's owner-operator.
- Personnel follow the instructions in this manual.

2.2 Designated use

Application and media
The measuring device described in these Operating Instructions is intended for continuous, non-contact level measurement in liquids. Because of its operating frequency of approx. 26 GHz, a maximum radiated pulsed power of 5.7 mW and an average power output of 0.015 mW, use outside of closed, metallic vessels is also permitted. If operated outside of closed vessels, the device must be mounted in accordance with the instructions in the "Installation" section. Operation of the devices does not pose a risk to health or the environment.

If the limit values specified in the "Technical data" and the conditions listed in the instructions and additional documentation are observed, the measuring device may be used for the following measurements only:
- Measured process variables: distance
- Calculated process variables: volume or mass in vessels of any shape; flow through measuring weirs or channels (calculated from the level by the linearization functionality)

To ensure that the measuring device remains in proper condition for the operation time:
- Use the measuring device only for media to which the process-wetted materials have an adequate level of resistance.
- Observe the limit values (see "Technical data").

Incorrect use
The manufacturer is not liable for damage caused by improper or non-designated use.

Verification for borderline cases:
- With regard to special media and media used for cleaning, please contact the manufacturer. Endress+Hauser will be happy to assist in clarifying the corrosion-resistant properties of wetted materials but does not accept any warranty or liability.

Residual risks
Due to heat transfer from the process as well as power dissipation within the electronics, the temperature of the electronics housing and the assemblies contained therein may rise to 80 °C (176 °F) during operation. When in operation, the sensor can reach a temperature close to the medium temperature.

Danger of burns from contact with surfaces!
- In the event of elevated fluid temperatures, ensure protection against contact to prevent burns.

2.3 Workplace safety

For work on and with the device:
- Wear the required personal protective equipment according to federal/national regulations.

2.4 Operational safety

Risk of injury!
- Operate the device only if it is in proper technical condition, free from errors and faults.
- The operator is responsible for interference-free operation of the device.

Modifications to the device

Unauthorized modifications to the device are not permitted and can lead to unforeseeable dangers:
- If modifications are nevertheless required, consult with the manufacturer.

Repair

To ensure continued operational safety and reliability:
- Carry out repairs on the device only if they are expressly permitted.
- Observe federal/national regulations pertaining to the repair of an electrical device.
- Use only original spare parts and accessories from the manufacturer.

Hazardous area

To eliminate the risk of danger to persons or the facility when the device is used in the approval-related area (e.g. explosion protection, pressure equipment safety):
- Check the nameplate to verify if the device ordered can be put to its intended use in the approval-related area.
- Observe the specifications in the separate supplementary documentation that is an integral part of this manual.

2.5 Product safety

This measuring device is designed in accordance with good engineering practice to meet state-of-the-art safety requirements, has been tested, and left the factory in a condition in which it is safe to operate. It meets general safety standards and legal requirements.

2.5.1 CE mark

The measuring system meets the legal requirements of the applicable EU Directives. These are listed in the corresponding EU Declaration of Conformity along with the standards applied.

Endress+Hauser confirms successful testing of the device by affixing to it the CE mark.

2.5.2 EAC conformity

The measuring system meets the legal requirements of the applicable EAC guidelines. These are listed in the corresponding EAC Declaration of Conformity together with the standards applied.

Endress+Hauser confirms successful testing of the device by affixing to it the EAC mark.

3 Product description

3.1 Product design

3.1.1 Micropilot FMR10

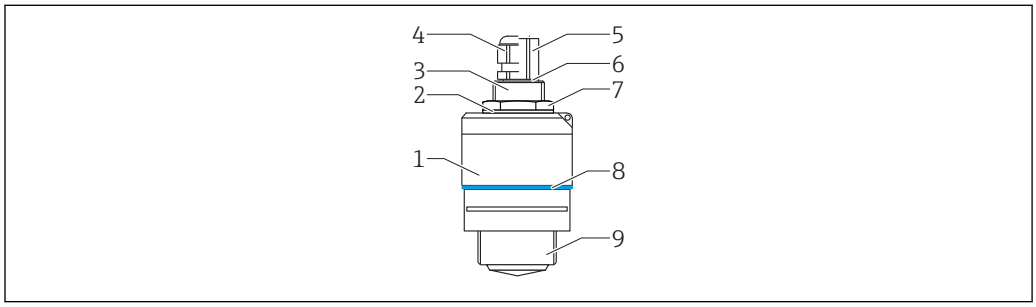

1 *Design of the Micropilot FMR10 (26 GHz)*

1 *Sensor housing*
2 *Seal*
3 *Process connection rear side*
4 *Cable gland*
5 *Pipe adapter*
6 *O-ring*
7 *Counter nut*
8 *Design ring*
9 *Process connection front side*

4 Incoming acceptance and product identification

4.1 Goods acceptance

Check the following during goods acceptance:
- Are the order codes on the delivery note and the product sticker identical?
- Are the goods undamaged?
- Do the nameplate data match the ordering information on the delivery note?
- If required (see nameplate): Are the safety instructions (XA) provided?

If one of these conditions is not met, please contact the manufacturer's sales office.

4.2 Product identification

The following options are available for the identification of the measuring device:
- Nameplate specifications
- Extended order code with breakdown of the device features on the delivery note

- Enter the serial number from the nameplates into *W@M Device Viewer* (www.endress.com/deviceviewer)
  - All the information about the measuring device and the scope of the associated Technical Documentation are displayed.

- Enter the serial number from the nameplate into the *Endress+Hauser Operations App* or use the *Endress+Hauser Operations App* to scan the 2-D matrix code (QR Code) provided on the nameplate
  - All the information about the measuring device and the scope of the associated Technical Documentation are displayed.

4.3 Manufacturer address

Endress+Hauser SE+Co. KG
Hauptstraße 1
79689 Maulburg, Germany

Address of the manufacturing plant: See nameplate.

4.4 Nameplate

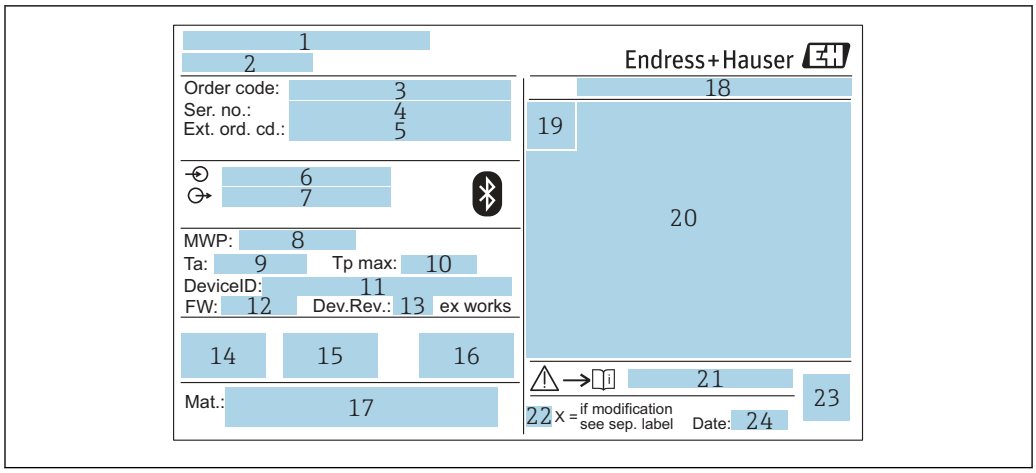

2 *Nameplate of Micropilot*

1 *Manufacturer address*
2 *Device name*
3 *Order code*
4 *Serial number (ser. no.)*
5 *Extended order code (ext. ord. cd.)*
6 *Supply voltage*
7 *Signal outputs*
8 *Process pressure*
9 *Allowable ambient temperature (T_a)*
10 *Maximum process temperature*
11 *Device ID*
12 *Firmware version (FW)*
13 *Device revision (Dev.Rev.)*
14 *CE mark*
15 *Additional information about the device version (certificates, approvals)*
16 *C-tick*
17 *Materials in contact with process*
18 *Degree of protection: e.g. IP, NEMA*
19 *Certificate symbol*
20 *Certificate and approval relevant data*
21 *Document number of the Safety Instructions: e.g. XA, ZD, ZE*
22 *Modification mark*
23 *2-D matrix code (QR code)*
24 *Manufacturing date: year-month*

Up to 33 characters of the extended order code are indicated on the nameplate. If the extended order code contains additional characters, these cannot be displayed.

However, the complete extended order code can also be displayed via the device operating menu: **Extended order code 1 to 3** parameter

5 Installation

5.1 Installation conditions

5.1.1 Installation types

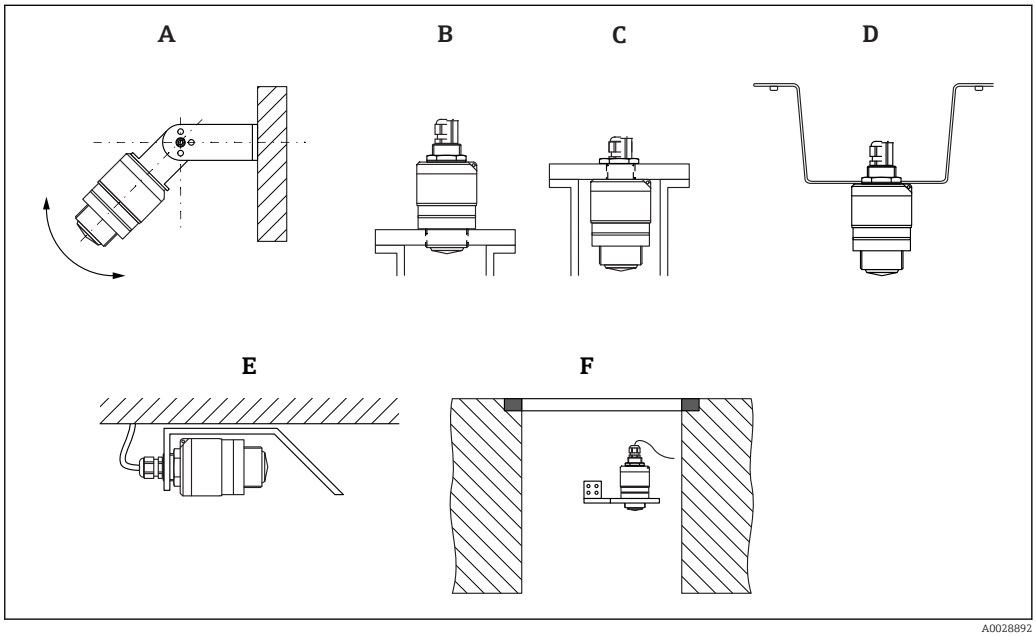

3 *Wall, ceiling or nozzle installation*

A Wall or ceiling mount, adjustable
B Mounted at front thread
C Mounted at rear thread
D Ceiling installation with counter nut (included in delivery)
E Horizontal installation in confined spaces (sewer shaft)
F Shaft wall mounting

Caution!
- The sensor cables are not designed as supporting cables. Do not use them for suspension purposes.
- Always operate the device in a vertical position in free-space applications.

5.1.2 Nozzle mounting

The antenna should project out of the nozzle for optimum measurement. The interior of the nozzle must be smooth and may not contain any edges or welded joints. The edge of the nozzle should be rounded if possible.

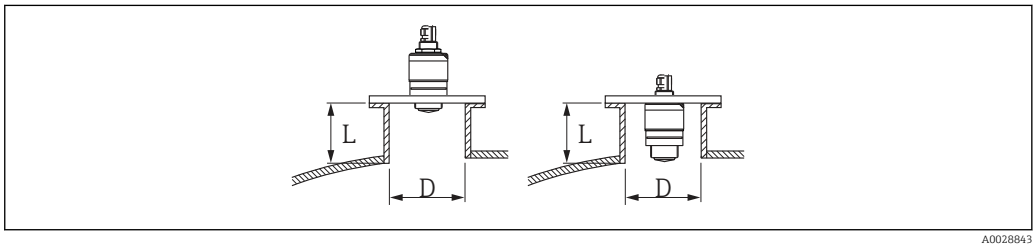

4 *Nozzle mounting*

L Nozzle length
D Nozzle diameter

The maximum length of the nozzle **L** depends on the nozzle diameter **D**.

Please note the limits for the diameter and length of the nozzle.

Mounting outside the nozzle
- D: min. 40 mm (1.5 in)
- L: max. D × 1.5

Mounting inside the nozzle
- D: min. 80 mm (3 in)
- L: max. 140 mm (5.5 in) + D × 1.5

5.1.3 Position for installation on a vessel

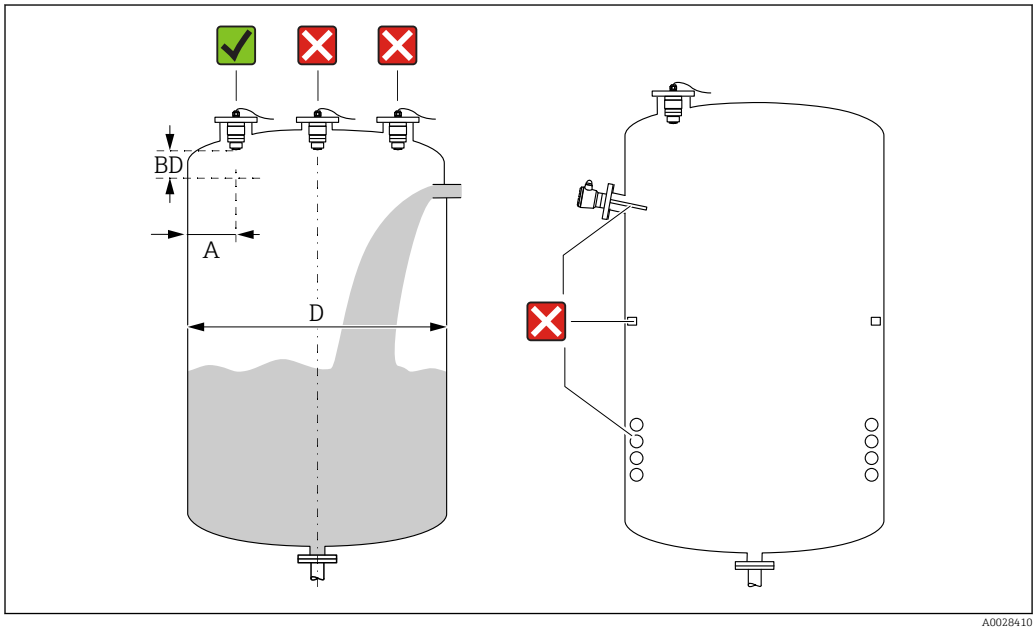

5 *Installation position on a vessel*

- If possible install the sensor so that its lower edge projects into the vessel.
- Recommended distance **A** wall - nozzle outer edge: ~ ⅙ of the vessel diameter **D**. Under no circumstances should the device be mounted closer than 15 cm (5.91 in) to the vessel wall.
- Do not install the sensor in the middle of the vessel.
- Avoid measurements through the filling curtain.
- Avoid equipment such as limit switches, temperature sensors, baffles, heating coils etc.
- No signals are evaluated within the Blocking distance (BD). It can therefore be used to suppress interference signals (e.g. the effects of condensate) in the vicinity of the antenna.
  An automatic Blocking distance of at least 0.1 m (0.33 ft) is configured as standard. However, this can be overwritten manually (0 m (0 ft) is also permitted).
  Automatic calculation:
  Blocking distance = Empty calibration - Full calibration - 0.2 m (0.656 ft).
  Each time a new entry is made in the **Empty calibration** parameter or **Full calibration** parameter, the **Blocking distance** parameter is recalculated automatically using this formula.
  If the result of the calculation is a value < 0.1 m (0.33 ft), the Blocking distance of 0.1 m (0.33 ft) will continue to be used.

5.1.4 Device alignment for installation on a vessel

- Align the antenna vertically to the product surface.
- Align the eyelet with lug towards the vessel wall as well as possible.

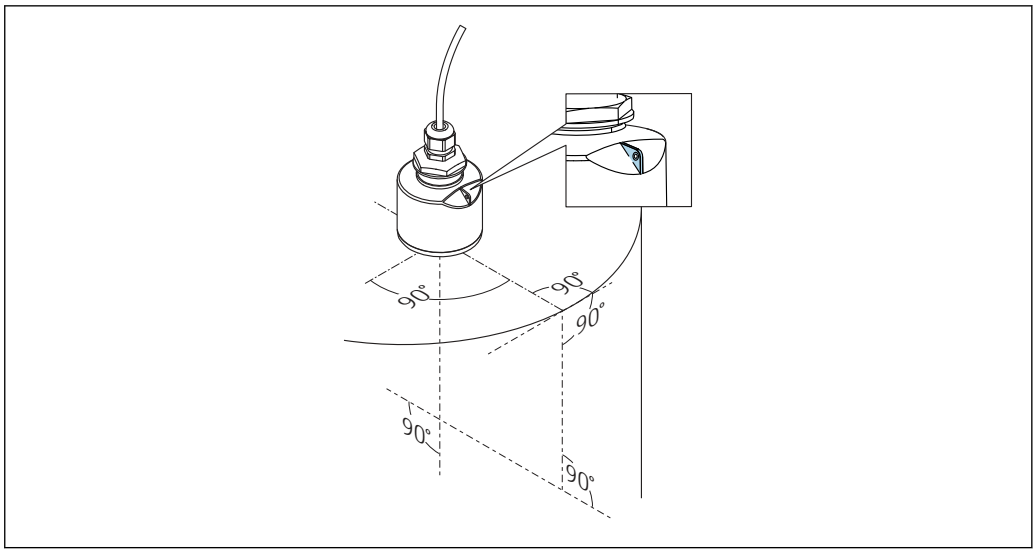

A0028927

6 *Device alignment for installation on a vessel*

5.1.5 Beam angle

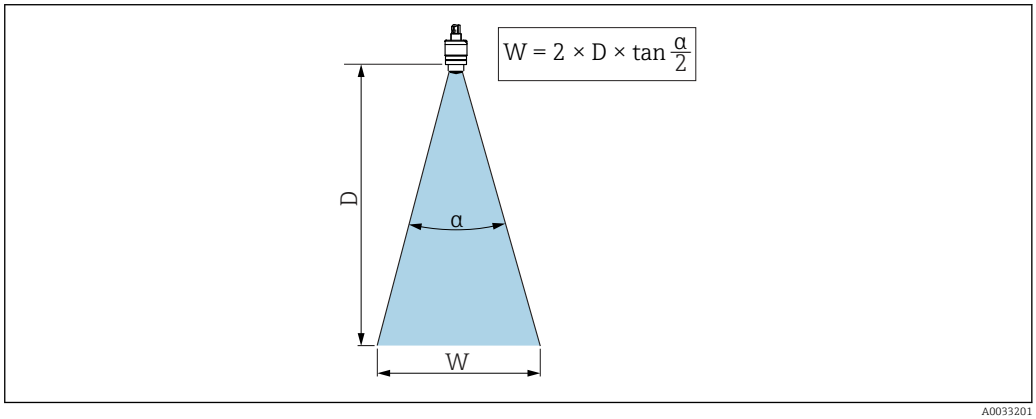

A0033201

7 *Relationship between beam angle α, distance D and beamwidth diameter W*

The beam angle is defined as the angle **α** at which the power density of the radar waves reaches half the value of the maximum power density (3 dB width). Microwaves are also emitted outside the signal beam and can be reflected off interfering installations.

Beam diameter **W** as a function of beam angle **α** and distance **D**.

40 mm (1.5 in) antenna, α 30 °
W = D × 0.54

40 mm (1.5 in) antenna with flooding protection tube, α 12 °
W = D × 0.21

5.1.6 Measurement in plastic vessels

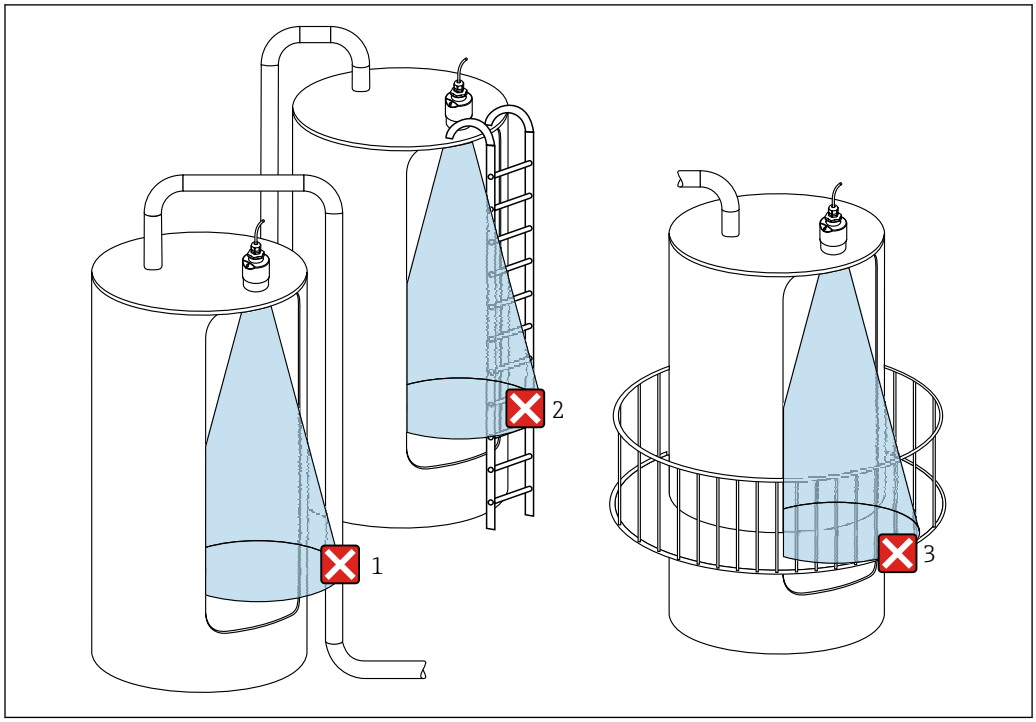

8 *Measurement in a plastic vessel with a metallic, interfering installation outside of the vessel*

1 *Pipe, tubing*
2 *Ladder*
3 *Grate, railing*

If the outer wall of the vessel is made of a non-conductive material (e.g. GFR), microwaves can also be reflected by interfering installations outside of the vessel.

Please ensure there are no interfering installations made of a conductive material in the signal beam (see the beam angle section for information on calculating the beamwidth diameter).

Please contact the manufacturer for further information.

5.1.7 Weather protection cover

For outdoor use, a weather protection cover is recommended.

The weather protection cover is available as an accessory.

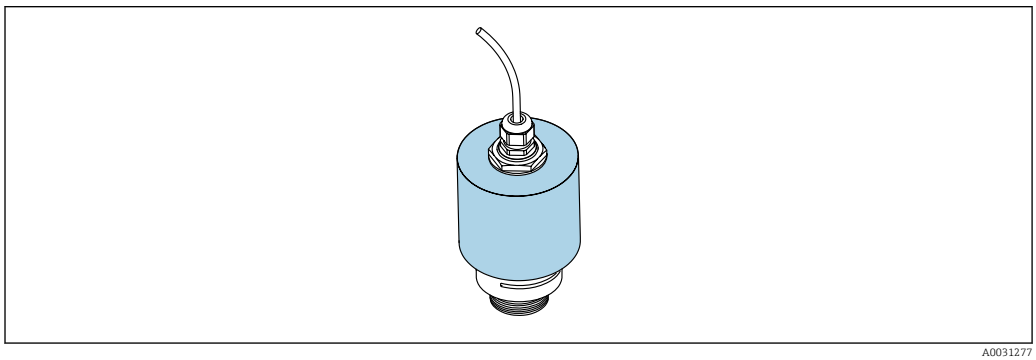

9 *Weather protection cover with 40 mm (1.5 in) antenna*

The sensor is not completely covered by the protection cover.

5.1.8 Use of flooding protection tube

The flooding protection tube ensures the sensor measures the maximum level even if it is completely flooded.

In free-field installations and/or in applications where there is a risk of flooding, the flooding protection tube must be used.

The flooding protection tube can be ordered as an accessory or together with the device via the product structure "Accessory enclosed".

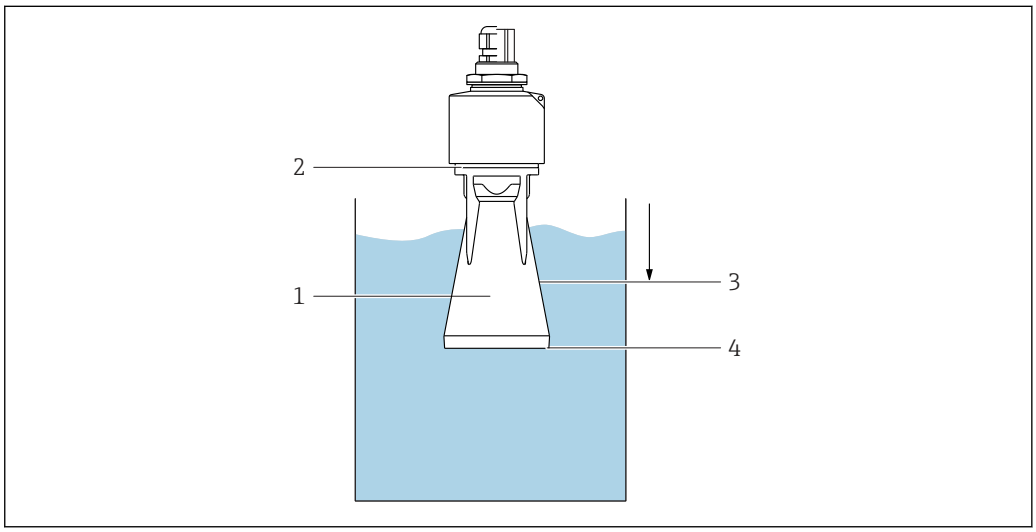

10 *Function of flooding protection tube*

1 *Air pocket*
2 *O-ring (EPDM) seal*
3 *Blocking distance*
4 *Max. level*

The tube is screwed directly onto the sensor and seals off the system by means of an O-ring making it air-tight. In the event of flooding, the air pocket that forms in the tube ensures the measurement of the maximum level at the end of the tube. Due to the fact that the Blocking distance is inside the tube, multiple echoes are not analyzed.

5.1.9 Installation with mounting bracket, adjustable

The mounting bracket is available as an accessory.

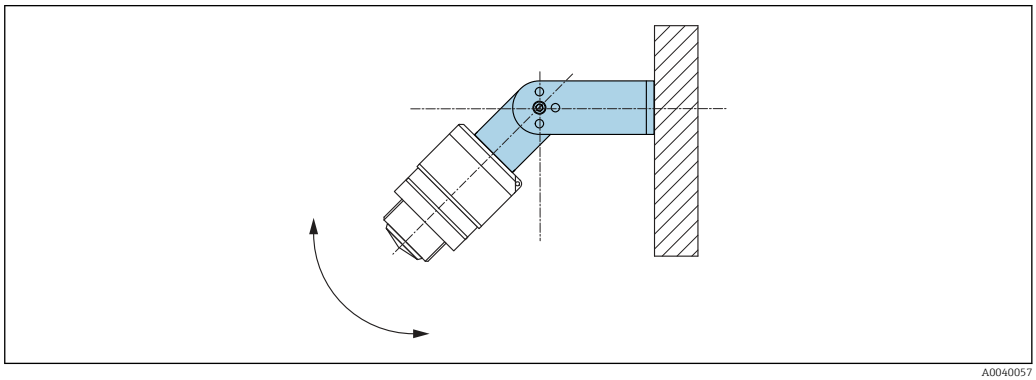

11 *Installation with mounting bracket, adjustable*

- Wall or ceiling installation is possible.
- Using the mounting bracket, position the antenna so that it is perpendicular to the product surface.

NOTICE

There is no conductive connection between the mounting bracket and transmitter housing.

Electrostatic charging possible.

▶ Integrate the mounting bracket in the local potential equalization system.

5.1.10 Cantilever installation, with pivot

The cantilever, wall bracket and mounting frame are available as accessories.

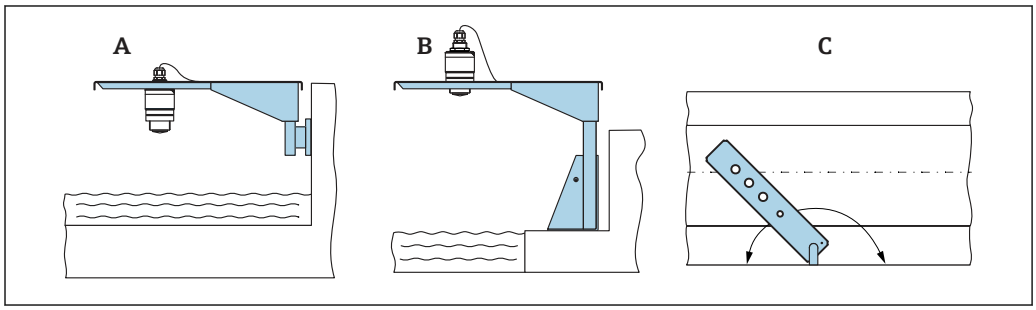

12 *Cantilever installation, with pivot*

A Cantilever with wall bracket
B Cantilever with mounting frame
C Cantilever can be turned (e.g., in order to position the device over the center of the flume)

5.1.11 Installation of horizontal mounting bracket for sewer shafts

The horizontal mounting bracket for sewer shafts is available as an accessory.

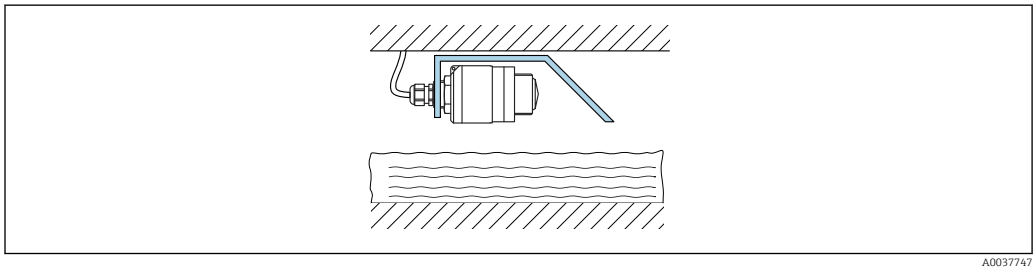

13 *Installation of horizontal mounting bracket for sewer shafts*

5.1.12 Mounting in a shaft

The pivoted mounting bracket is available as an accessory.

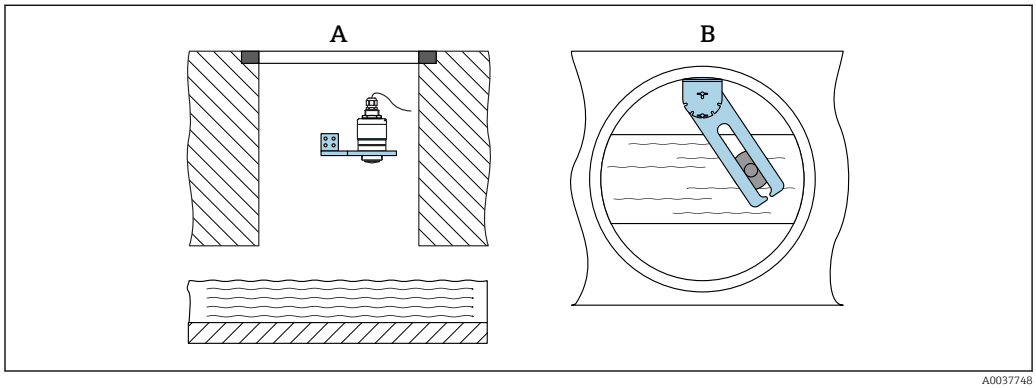

14 *Mounting in a shaft, pivotable and adjustable*

A Arm with wall bracket
B Pivotable and adjustable arm (e.g. to align the device with the center of a channel)

5.2 Post-installation check

❑ Is the device or cable undamaged (visual inspection)?

❑ Is the device adequately protected from wet conditions and direct sunlight?

❑ Is the device properly secured?

6 Electrical connection

6.1 Cable assignment

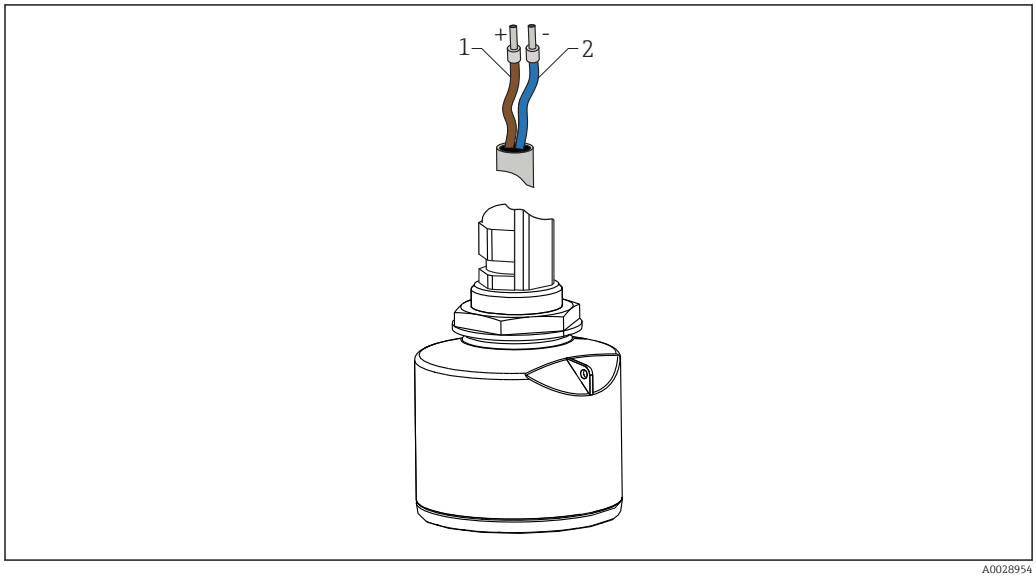

15 *Cable assignment*

1 *Plus, brown wire*
2 *Minus, blue wire*

6.2 Supply voltage

10.5 to 30 V_{DC}

An external power supply is necessary.

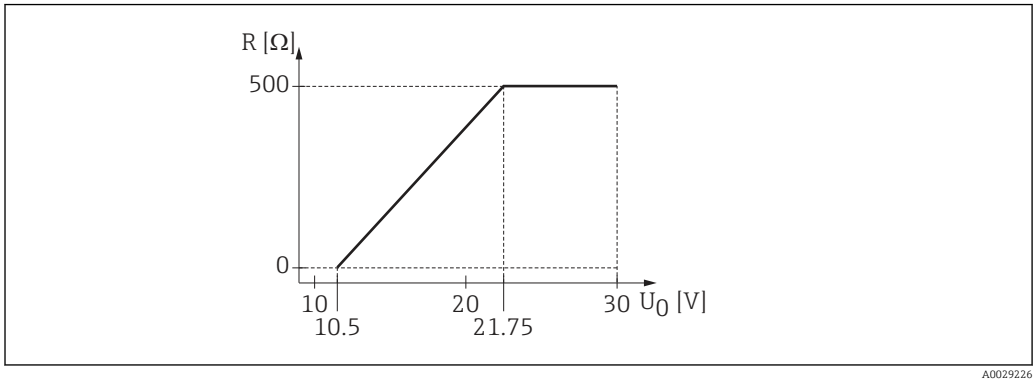

16 *Maximum load R, depending on supply voltage U_0 of power supply unit*

Battery operation
The sensor's *Bluetooth*® wireless technology communication can be disabled to increase the operating life of the battery.

Potential equalization
No special measures for potential equalization are required.

Various power supply units can be ordered as an accessory from Endress+Hauser.

6.3 Connecting the device

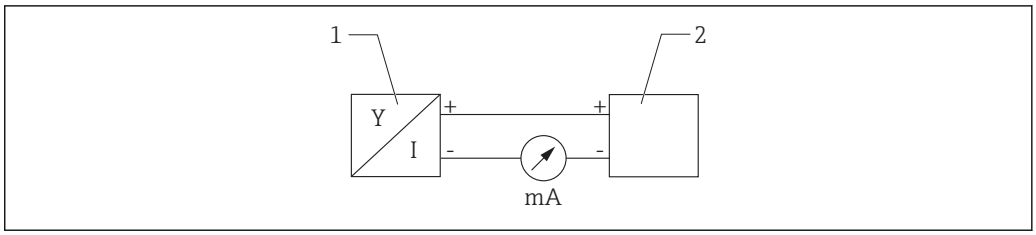

17 *FMR10 block diagram*

1 Micropilot FMR10, 4 to 20 mA
2 Power supply

6.4 Post-connection check

❑ Is the device or cable undamaged (visual inspection)?

❑ Do the mounted cables have adequate strain relief?

❑ Are the cable glands mounted and firmly tightened?

❑ Does the supply voltage match the specifications on the nameplate?

❑ No reverse polarity, is terminal assignment correct?

7 Operability

7.1 Operating concept

- 4 to 20 mA
- SmartBlue (app) via *Bluetooth*® wireless technology

7.2 Operation via Bluetooth® wireless technology

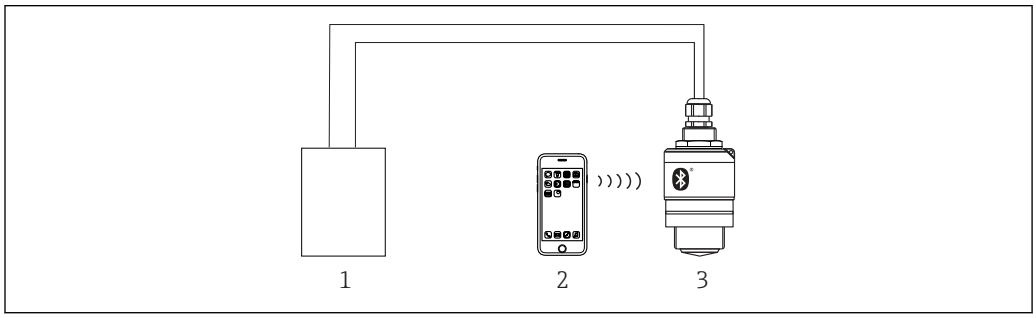

18 Possibilities for remote operation via Bluetooth® wireless technology

1 Transmitter power supply unit
2 Smartphone/tablet with SmartBlue (app)
3 Transmitter with Bluetooth® wireless technology

8 Commissioning and operation

8.1 Installation and function check

Perform the post-installation check and the post-connection check prior to commissioning.

8.1.1 Post-installation check

❑ Is the device or cable undamaged (visual inspection)?

❑ Is the device adequately protected from wet conditions and direct sunlight?

❑ Is the device properly secured?

8.1.2 Post-connection check

❑ Is the device or cable undamaged (visual inspection)?

❑ Do the mounted cables have adequate strain relief?

❑ Are the cable glands mounted and firmly tightened?

❑ Does the supply voltage match the specifications on the nameplate?

❑ No reverse polarity, is terminal assignment correct?

8.2 Commissioning via SmartBlue (App)

8.2.1 Device requirements

Commissioning via SmartBlue is only possible if the device has Bluetooth capability (Bluetooth module installed at the factory prior to delivery or retrofitted).

8.2.2 SmartBlue system requirements

SmartBlue system requirements

SmartBlue is available as a download from the Google Play Store for Android devices and from the iTunes Store for iOS devices.

- Devices with iOS:
  iPhone 4S or higher from iOS 9; iPad 2 or higher from iOS 9; iPod touch 5th generation or higher from iOS 9
- Devices with Android:
  From Android 4.4 KitKat and *Bluetooth*® 4.0

8.2.3 SmartBlue App

1. Scan the QR code or enter "SmartBlue" in the search field of the App Store.



19 Download link

2. Start SmartBlue.
3. Select device from livelist displayed.

4. Enter the login data:
   ↳ User name: admin
   Password: serial number of the device
5. Tap the icons for more information.

After logging in for the first time, change the password!

8.2.4 Envelope curve display in SmartBlue

Envelope curves can be displayed and recorded in SmartBlue.

In addition to the envelope curve, the following values are displayed:
- D = Distance
- L = Level
- A = Absolute amplitude

- With screenshots, the displayed section (zoom function) is saved
- With video sequences, the whole area without zoom function is saved all the time

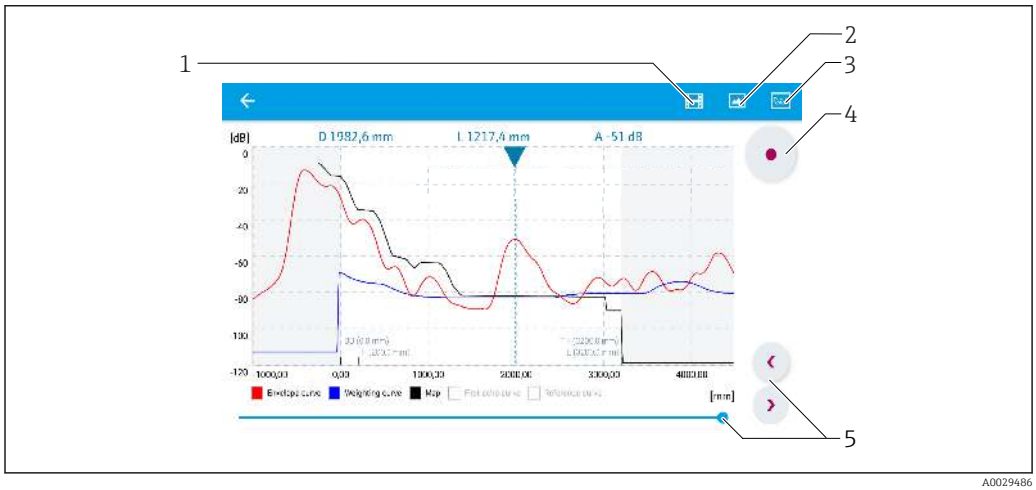

20 *Envelope curve display (sample) in SmartBlue for Android*

1 *Record video*
2 *Create screenshot*
3 *Display mapping menu*
4 *Start/stop video recording*
5 *Move time on time axis*

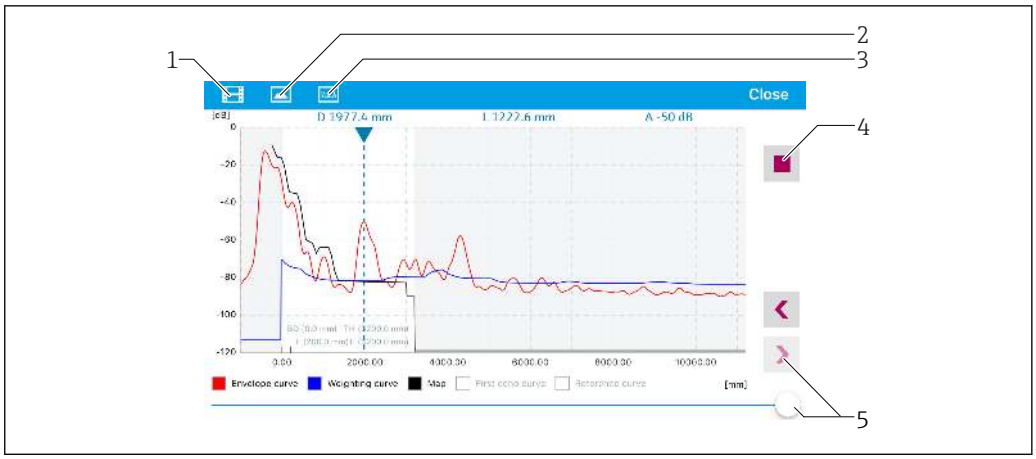

21 *Envelope curve display (sample) in SmartBlue for iOS*

1 *Record video*
2 *Create screenshot*
3 *Display mapping menu*
4 *Start/stop video recording*
5 *Move time on time axis*

8.3 Data access - Security

8.3.1 Software locking via access code in SmartBlue

The configuration data can be write-protected using an access code (software locking).

▶ Navigate to: Setup → Advanced setup → Administration → Administration1 → Define access code → Confirm access code

The new access code must differ from the last access code used and may not be "0000".

Once the access code has been defined, write-protected devices can be switched to maintenance mode only if the access code is entered in the **Enter access code** parameter. If the factory setting is not changed or if "0000" is entered, the device is in maintenance mode and its configuration data are therefore **not** write-protected and can be changed at any time.

8.3.2 Unlocking via SmartBlue

▶ Navigate to: Setup → Advanced setup → Access status tooling → Enter access code

8.3.3 Bluetooth® wireless technology

Signal transmission via Bluetooth® wireless technology uses a cryptographic technique tested by the Fraunhofer Institute

- The device is not visible via *Bluetooth*® wireless technology without the SmartBlue app
- Only one point-to-point connection is established between **one** sensor and **one** smartphone or tablet
- The *Bluetooth*® wireless technology interface can be disabled via SmartBlue

Disabling the Bluetooth® wireless technology interface

▶ Navigate to: Setup → Communication → Bluetooth configuration → Bluetooth mode
  ↳ Switch off the *Bluetooth*® wireless technology interface. "Off" position disables remote access via app

Re-enabling the Bluetooth® wireless technology interface

If the *Bluetooth*® wireless technology interface was disabled, it can only be re-enabled with the following recovery sequence.

Bluetooth recovery sequence

The *Bluetooth*® wireless technology interface can be re-enabled after performing the following recovery sequence:

1. Connect device to voltage supply
   ↳ After a waiting time of 10 minutes, a time window of 2 minutes opens
2. You can re-enable the *Bluetooth*® wireless technology interface of the device using the SmartBlue (app) during this time window
3. Navigate to: Setup → Communication → Bluetooth configuration → Bluetooth mode
   ↳ Switch on the *Bluetooth*® wireless technology interface. "On" position enables remote access via app

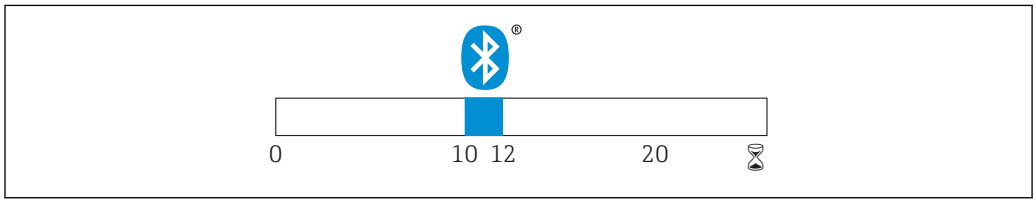

22 *Timeline for Bluetooth wireless technology recovery sequence, time in minutes*

9 Diagnostics and troubleshooting

9.1 General errors

Errors	Possible cause	Solution
Device does not respond	Supply voltage does not match the specification on the nameplate	Apply correct voltage
	The polarity of the supply voltage is wrong	Correct the polarity
	The cables do not contact the terminals properly	Ensure electrical contact between the cable and the terminal
Device measures incorrectly	Configuration error	▪ Check and correct the parameter configuration ▪ Carry out mapping
Linearized output value not plausible	Linearization error	SmartBlue: Check linearization table

9.2 Error - SmartBlue operation

Errors	Possible cause	Solution
Device is not visible in the live list	No Bluetooth connection	Enable Bluetooth function on smartphone or tablet
		Bluetooth function of sensor disabled, perform recovery sequence
Device is not visible in the live list	The device is already connected with another smartphone/tablet	Only **one** point-to-point connection is established between a sensor and a smartphone or tablet
Device is visible in the live list but cannot be accessed via SmartBlue	Android end device	Is the location function permitted for the app, was it approved the first time?
		GPS or positioning function must be activated for certain Android versions in conjunction with Bluetooth
		Activate GPS - close the app fully and restart - enable the positioning function for the app
Device is visible in the live list but cannot be accessed via SmartBlue	Apple end device	Log in as standard Enter user name "admin" Enter initial password (device serial number) paying attention to lower/upper case
Login via SmartBlue not possible	Device is being put into operation for the first time	Enter initial password (device serial number) and change. Pay attention to lower/upper case when entering the serial number.
Device cannot be operated via SmartBlue	Incorrect password entered	Enter correct password
Device cannot be operated via SmartBlue	Password forgotten	Contact the manufacturer's Service Department
Device cannot be operated via SmartBlue	Sensor temperature too high	If the ambient temperature results in an elevated sensor temperature of >60 °C (140 °F), Bluetooth communication may be disabled. Shield the device, isolate it and cool it down if necessary.

9.3 Diagnostic event in the operating tool

If a diagnostic event is present in the device, the status signal appears in the top left status area of the operating tool along with the corresponding symbol for the event level in accordance with NAMUR NE 107:

- Failure (F)
- Function check (C)
- Out of specification (S)
- Maintenance required (M)

Calling up remedial measures

▶ Navigate to the **Diagnostics** menu
↳ In the **Actual diagnostics** parameter the diagnostic event is shown with event text

9.4 List of diagnostic events

Diagnostic number	Short text	Remedy instructions	Status signal [from the factory]	Diagnostic behavior [from the factory]
Diagnostic of electronic				
270	Main electronic failure	Exchange device	F	Alarm
271	Main electronic failure	1. Restart device 2. If failure remains, exchange device.	F	Alarm
272	Main electronic failure	1. Restart device 2. Check enviroment for strong EMC fields 3. If failure remains, exchange device.	F	Alarm
283	Memory content	1. Transfer data or reset device 2. Contact service	F	Alarm
Diagnostic of configuration				
410	Data transfer	1. Check connection 2. Retry data transfer	F	Alarm
411	Up-/download active	Up-/download active, please wait	C	Warning
435	Linearization	Check linearization table	F	Alarm
438	Dataset	1. Check data set file 2. Check device configuration 3. Up- and download new configuration	M	Warning
441	Current output 1	1. Check process 2. Check current output settings	S	Warning
491	Current output 1 simulation	Deactivate simulation	C	Warning
585	Simulation distance	Deactivate simulation	C	Warning
586	Record map	Recording of mapping please wait	C	Warning
Diagnostic of process				
801	Energy too low	Increase supply voltage	S	Warning
825	Operating temperature	1. Check ambient temperature 2. Check process temperature	S	Warning

Diagnostic number	Short text	Remedy instructions	Status signal [from the factory]	Diagnostic behavior [from the factory]
941	Echo lost	Check parameter 'Evaluation sensitivity'	S	Warning
941	Echo lost		F	Alarm

10 Maintenance

No special maintenance work is required.

10.1 Cleaning the antenna

The antenna may become contaminated depending on the application. Emission and reception of microwaves can thus be potentially hindered. The level of contamination leading to an error depends on the medium and on the reflectivity, mainly determined by the dielectric constant ε_r.

If the medium tends to cause contamination and buildup, cleaning on a regular basis is recommended.

- Care must be taken to ensure the device is not damaged in the process of mechanical or hose-down cleaning.
- Material compatibility must be taken into account if cleaning agents are used!
- Do not exceed maximum permitted temperatures.

10.2 Process seals

The process seals of the sensor (at the process connection) should be replaced periodically. The interval between changes depends on the frequency of the cleaning cycles, the cleaning temperature and the medium temperature.

11 Repair

11.1 General information

11.1.1 Repair concept

The Endress+Hauser repair concept is devised in such a way that repairs can only be carried out through device replacement.

11.1.2 Replacing a device

Once the device has been replaced, parameters must be reconfigured and interference echo suppression or linearization may need to be carried out once again.

11.1.3 Return

The requirements for safe device return can vary depending on the device type and national legislation.

1. Refer to the website for more information:
   http://www.endress.com/support/return-material
2. Return the device if repairs or a factory calibration are required, or if the wrong device was ordered or delivered.

11.1.4 Disposal



If required by the Directive 2012/19/EU on waste electrical and electronic equipment (WEEE), the product is marked with the depicted symbol in order to minimize the disposal of WEEE as unsorted municipal waste. Do not dispose of products bearing this marking as unsorted municipal waste. Instead, return them to Endress+Hauser for disposal under the applicable conditions.

12 Accessories

12.1 Device-specific accessories

12.1.1 Protective cover

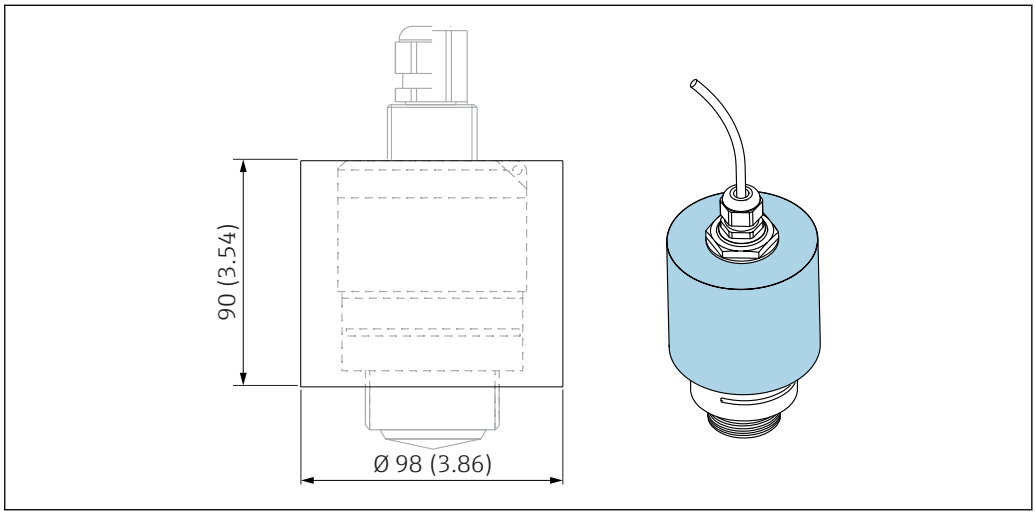

23 Dimensions of protective cover, engineering unit: mm (in)

Material
PVDF

Order number
52025686

The sensor is not completely covered.

12.1.2 Securing nut G 1-1/2"

Suitable for devices with G 1-1/2" and MNPT 1-1/2" process connection.

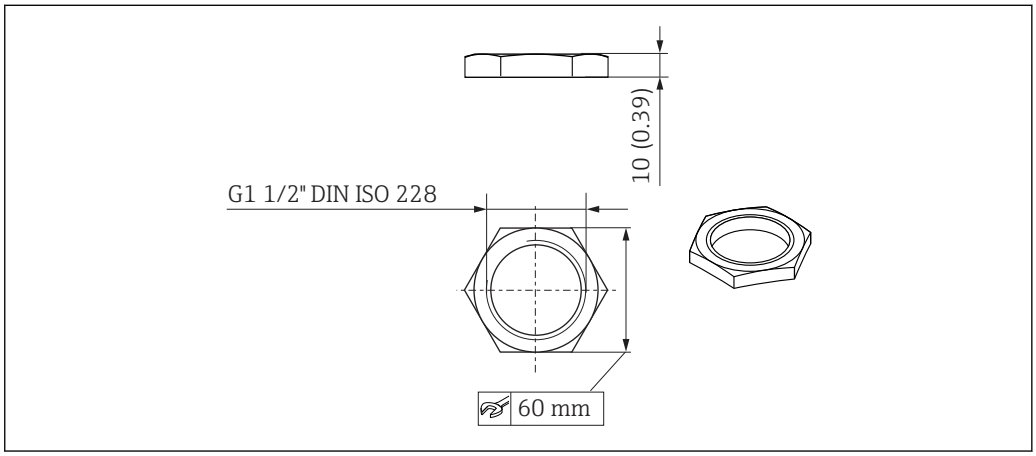

24 Dimensions of securing nut, engineering unit: mm (in)

Material
PC

Order number
52014146

12.1.3 Flooding protection tube 40 mm (1.5 in)

Suitable for use with devices with a 40 mm (1.5 in) antenna and G 1-1/2" process connection on front.

The flooding protection tube can be ordered together with the device via the product structure "Accessory enclosed".

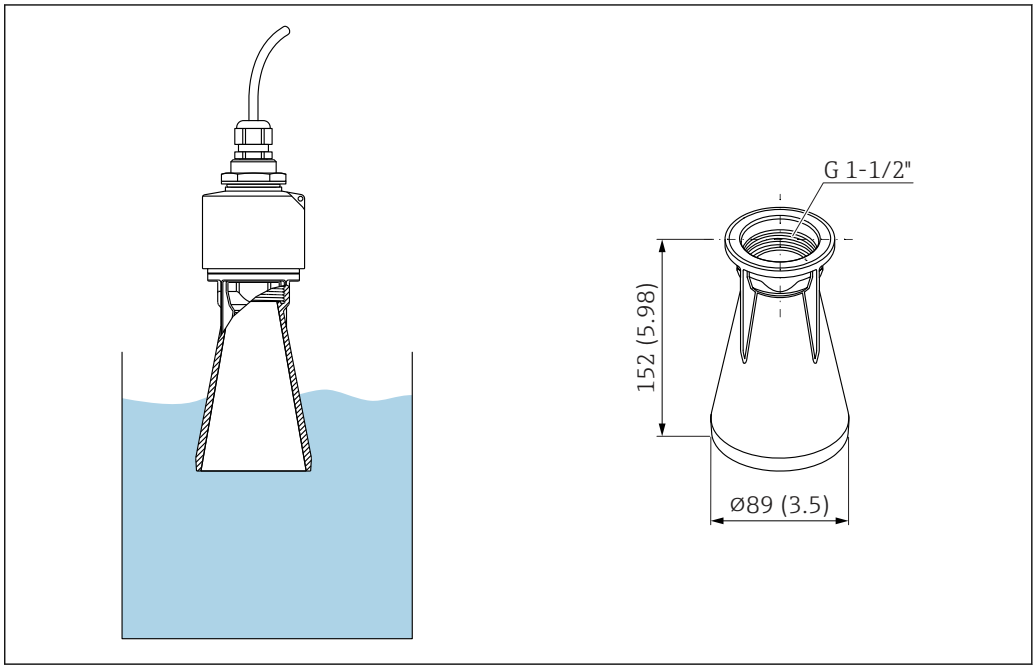

25 Dimensions of 40 mm (1.5 in) flooding protection tube, engineering unit: mm (in)

Material
PBT-PC, metalized

Order number
71325090

12.1.4 Mounting bracket, adjustable

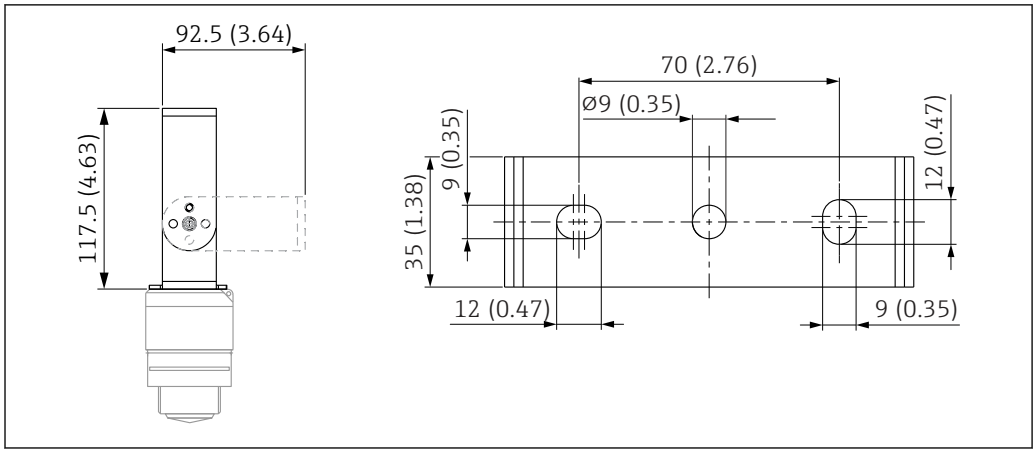

26 Dimensions of mounting bracket, engineering unit: mm (in)

Consists of:
- 1 × mounting bracket, 316L (1.4404)
- 1 × angle bracket, 316L (1.4404)
- 3 × screws, A4
- 3 × securing disks, A4

Order number
71325079

12.2 FAX50 screw-in flange

The FAX50 screw-in flange is a universal flange which can be used for three standards (DIN - ASME - JIS) owing to its min./max. dimensions.

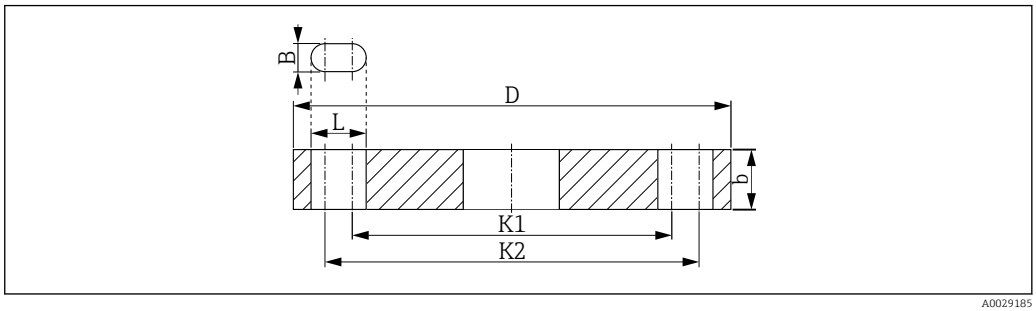

27 *Dimensions of the UNI flange FAX50*

L *Bore diameter*
K1, K2 *Diameter of pitch circle*
D *Flange diameter*
b *Total flange thickness*
B *Slotted hole (width)*

Order number
FAX50-####

For available materials and dimensions, see TI00426F

12.3 Angle bracket for wall mounting

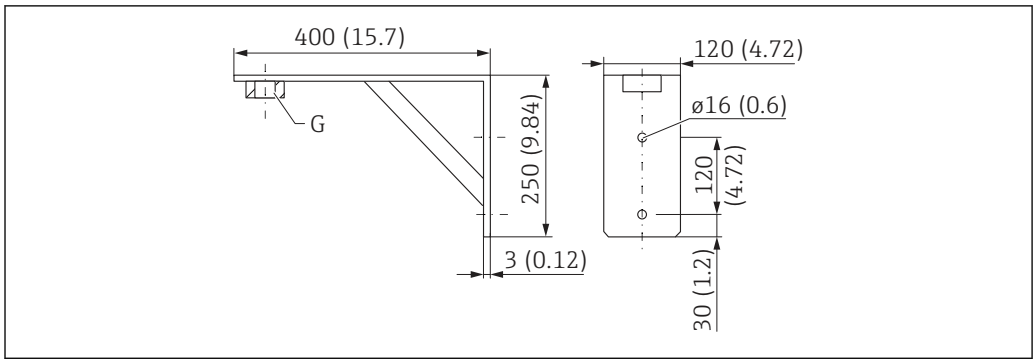

28 Dimensions of angle bracket. Unit of measurement mm (in)

G Sensor connection in accordance with product structure "Process connection on front"

Weight
3.4 kg (7.5 lb)

Material
316L (1.4404)

Order number for G 1-1/2" process connection
71452324
Also suitable for MNPT 1-1/2"

12.4 Cantilever with pivot

12.4.1 Installation type sensor process connection rear side

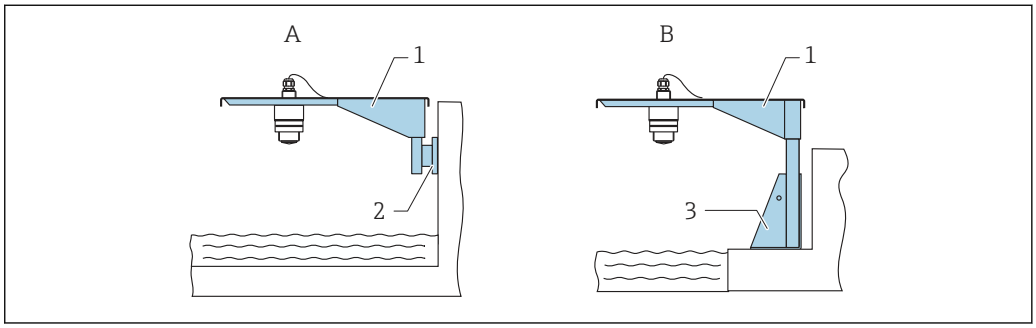

29 *Installation type sensor process connection rear side*

A Installation with cantilever and wall bracket
B Installation with cantilever and mounting frame
1 Cantilever
2 Wall bracket
3 Mounting frame

Cantilever (short) with pivot, sensor process connection on rear

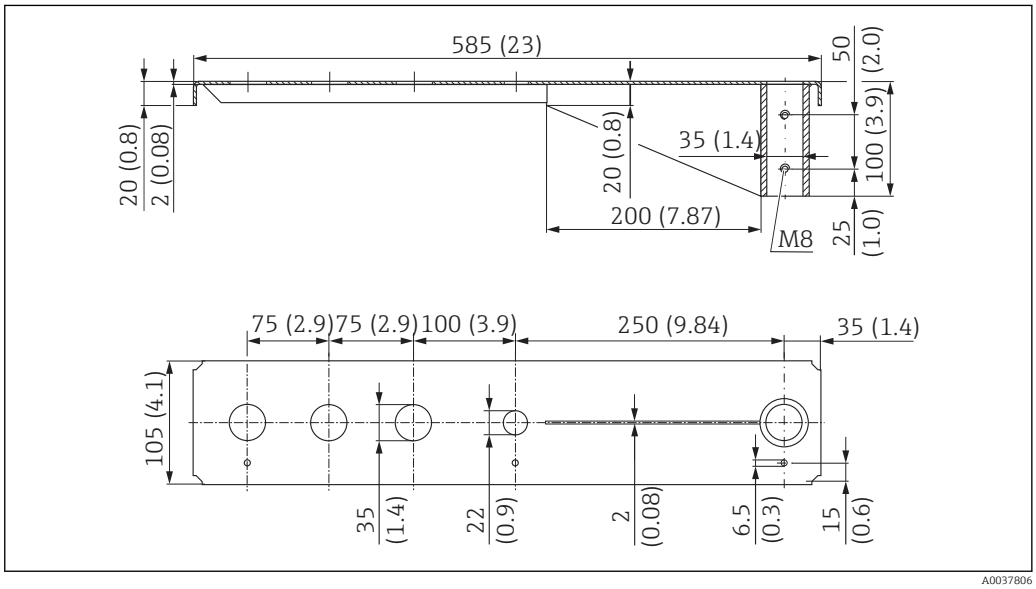

30 *Dimensions of cantilever (short) with pivot for sensor process connection on rear. Unit of measurement mm (in)*

Weight:
2.1 kg (4.63 lb)

Material
316L (1.4404)

Order number
71452315

- 35 mm (1.38 in) openings for all G 1" or MNPT 1" connections on rear
- 22 mm (0.87 in) opening can be used for an additional sensor
- Retaining screws are included in delivery

Cantilever (long) with pivot, sensor process connection on rear

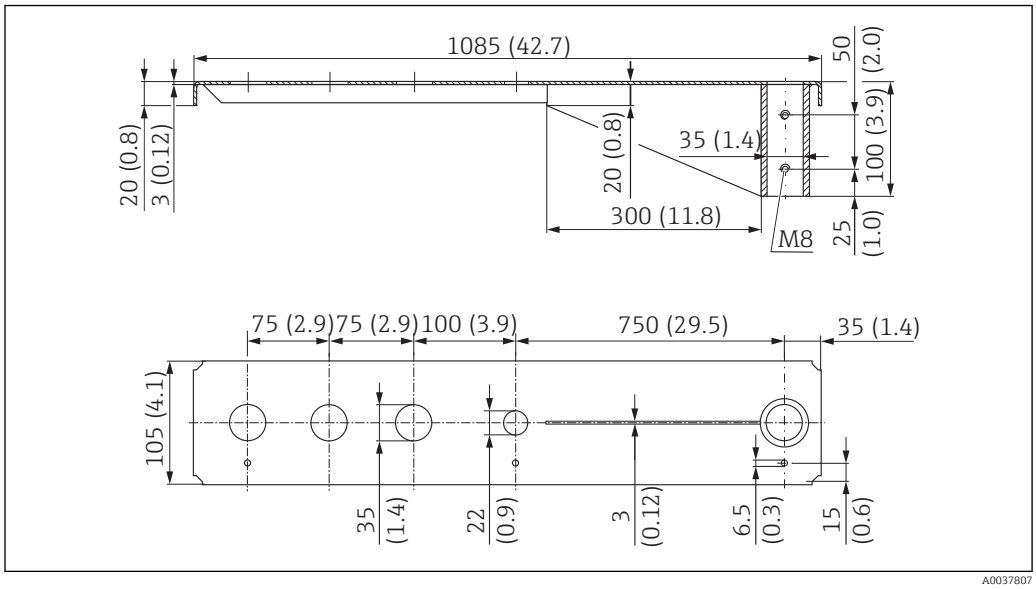

31 *Dimensions of cantilever (long) with pivot for sensor process connection on rear. Unit of measurement mm (in)*

Weight:
4.5 kg (9.92 lb)

Material
316L (1.4404)

Order number
71452316

- 35 mm (1.38 in) openings for all G 1" or MNPT 1" connections on rear
- 22 mm (0.87 in) opening can be used for an additional sensor
- Retaining screws are included in delivery

12.4.2 Installation type sensor process connection front side

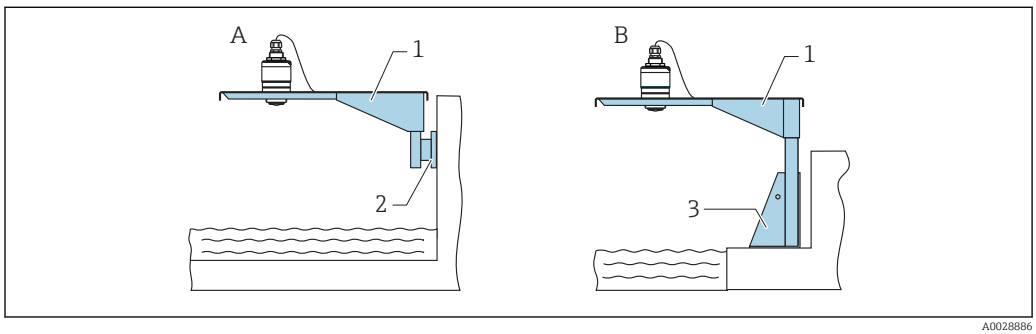

32 *Installation type sensor process connection front side*

A Installation with cantilever and wall bracket
B Installation with cantilever and mounting frame
1 Cantilever
2 Wall bracket
3 Mounting frame

Cantilever (short) with pivot, G 1-½" sensor process connection on front

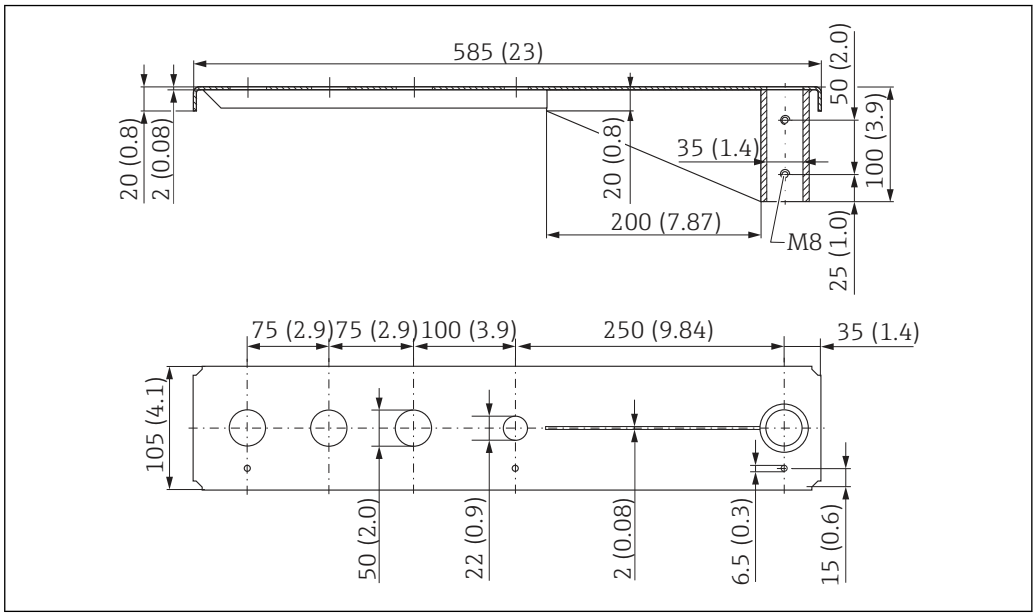

33 *Dimensions of cantilever (short) with pivot for G 1-½" sensor process connection on front. Unit of measurement mm (in)*

Weight:
1.9 kg (4.19 lb)

Material
316L (1.4404)

Order number
71452318

- 50 mm (2.17 in) openings for all G 1-½" (MNPT 1-½") connections on front
- 22 mm (0.87 in) opening can be used for an additional sensor
- Retaining screws are included in delivery

Cantilever (long) with pivot, G 1-½" sensor process connection on front

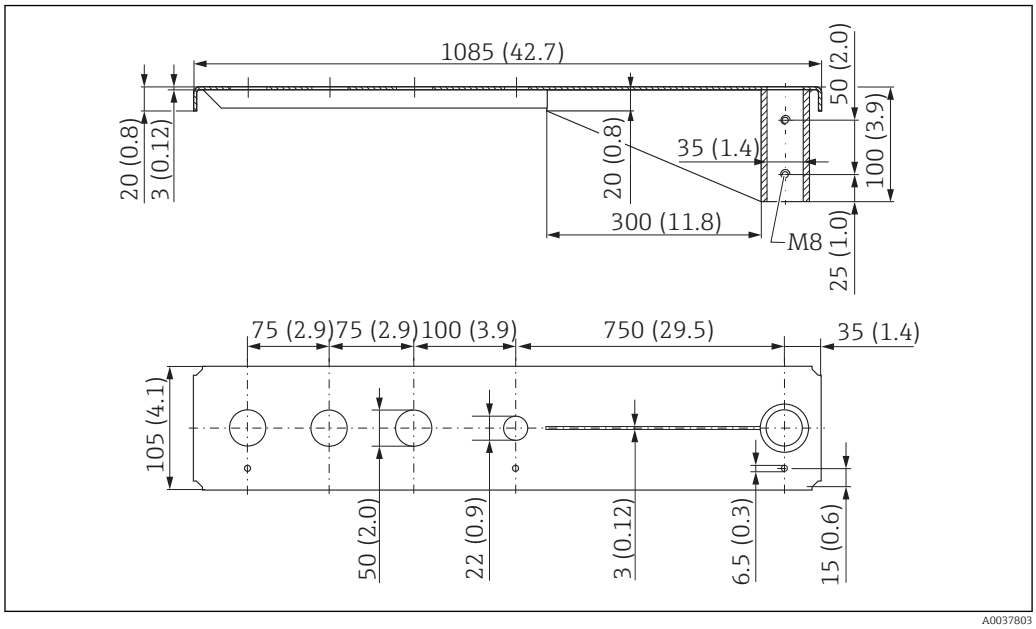

34 *Dimensions of cantilever (long) with pivot for G 1-½" sensor process connection on front. Unit of measurement mm (in)*

Weight:
4.4 kg (9.7 lb)

Material
316L (1.4404)

Order number
571452319

- 50 mm (2.17 in) openings for all G 1-½" (MNPT 1-½") connections on front
- 22 mm (0.87 in) opening can be used for an additional sensor
- Retaining screws are included in delivery

12.4.3 Mounting frame (short) for cantilever with pivot

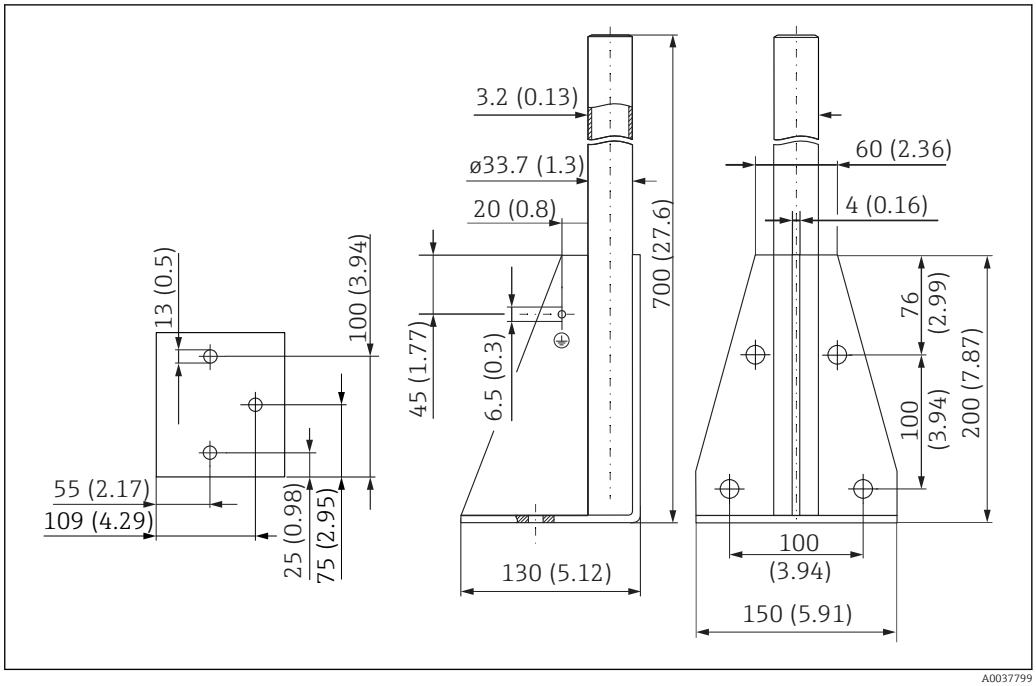

35 *Dimensions of mounting frame (short). Unit of measurement mm (in)*

Weight:
3.2 kg (7.06 lb)

Material
316L (1.4404)

Order number
71452327

12.4.4 Mounting frame (long) for cantilever with pivot

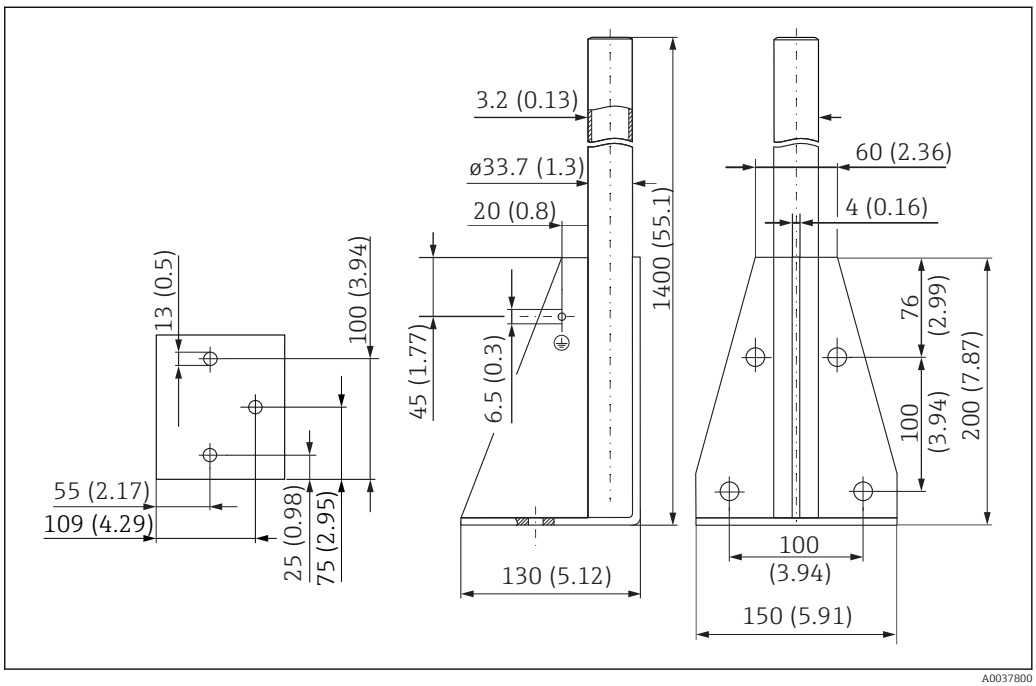

36 *Dimensions of mounting frame (long). Unit of measurement mm (in)*

Weight:
4.9 kg (10.08 lb)

Material
316L (1.4404)

Order number
71452326

12.4.5 Wall bracket for cantilever with pivot

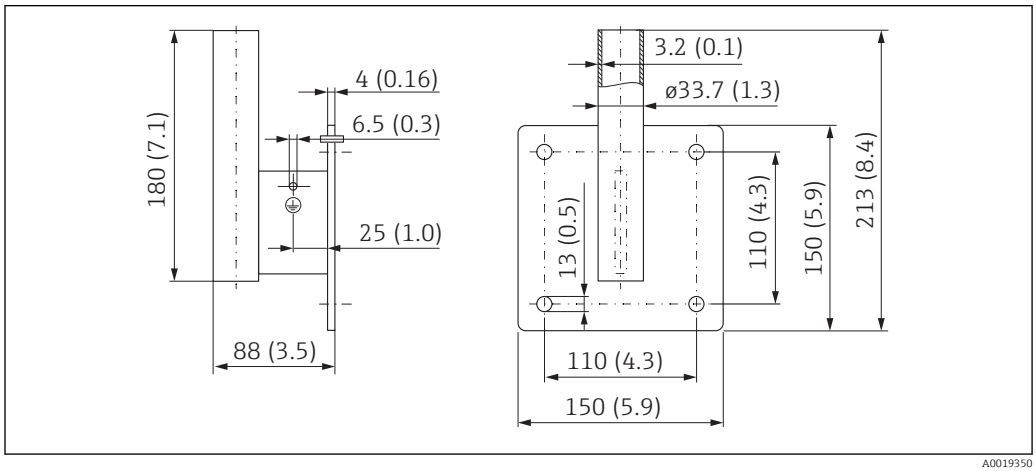

37 Dimensions of the wall bracket. Unit of measurement mm (in)

Weight
1.4 kg (3.09 lb)

Material
316L (1.4404)

Order number
71452323

12.5 Ceiling mounting bracket

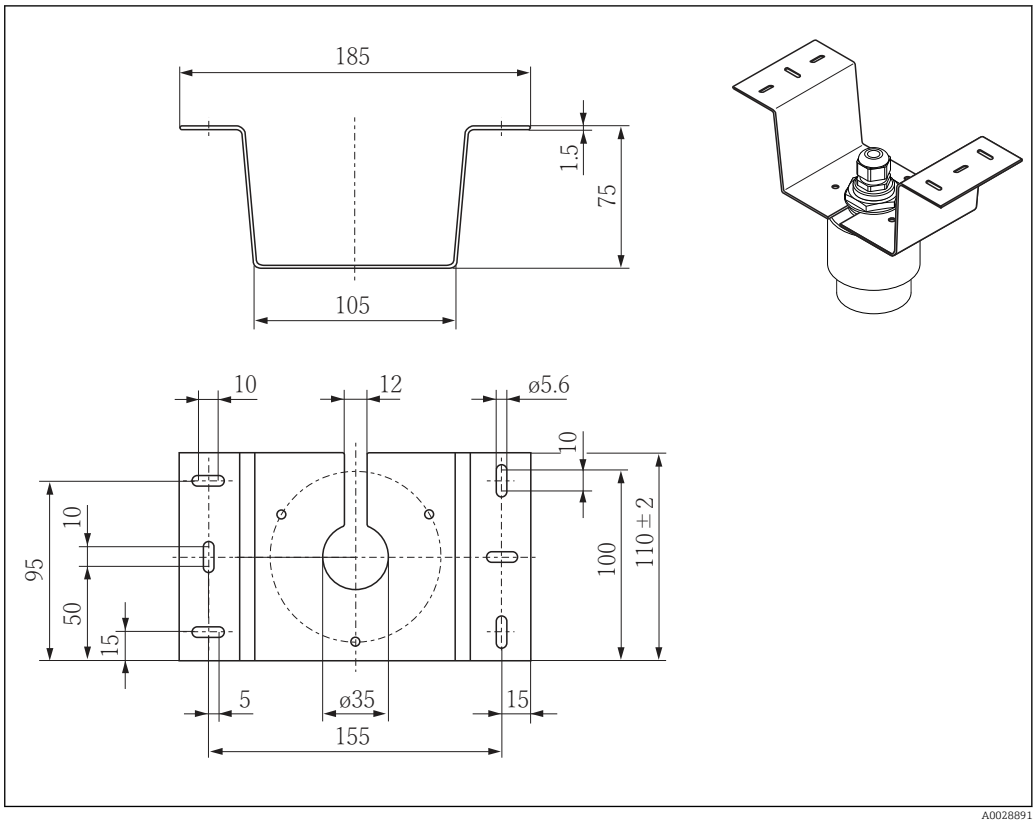

38 *Dimensions of ceiling mounting bracket. Unit of measurement mm (in)*

Material
316L (1.4404)

Order number
71093130

12.6 Pivoted mounting bracket for sewer channel

The pivotable mounting bracket is used to install the device in a manhole over a sewer channel.

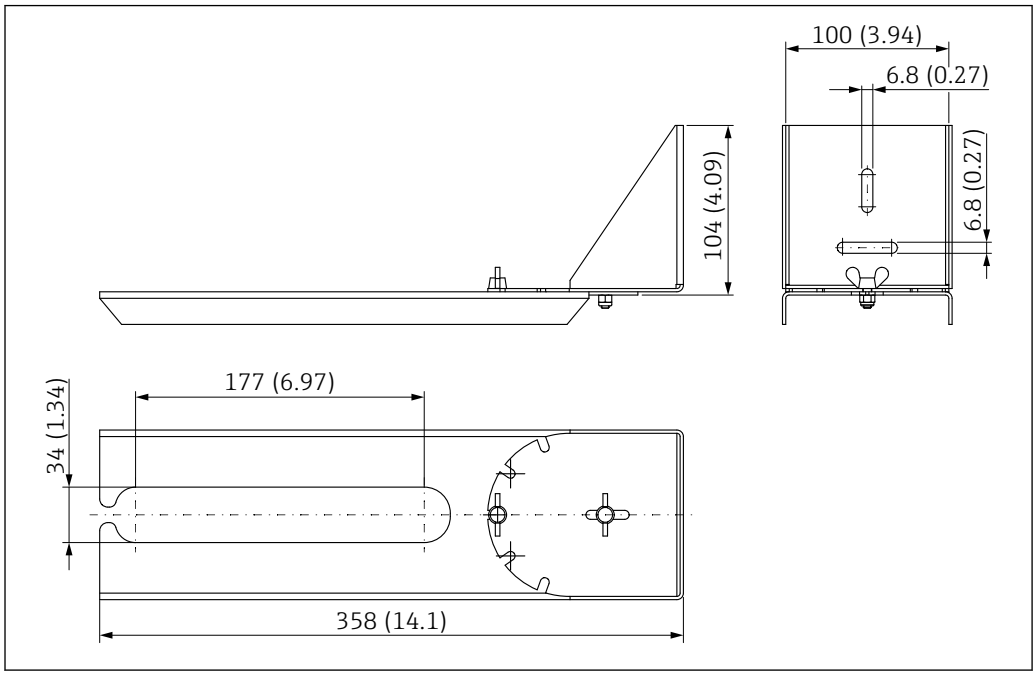

39 Dimensions of pivotable mounting bracket. Unit of measurement mm (in)

Material
316L (1.4404)

Order number
71429910

12.7 Horizontal mounting bracket for sewer shafts

The horizontal mounting bracket for sewer shafts is used to install the device in confined spaces.

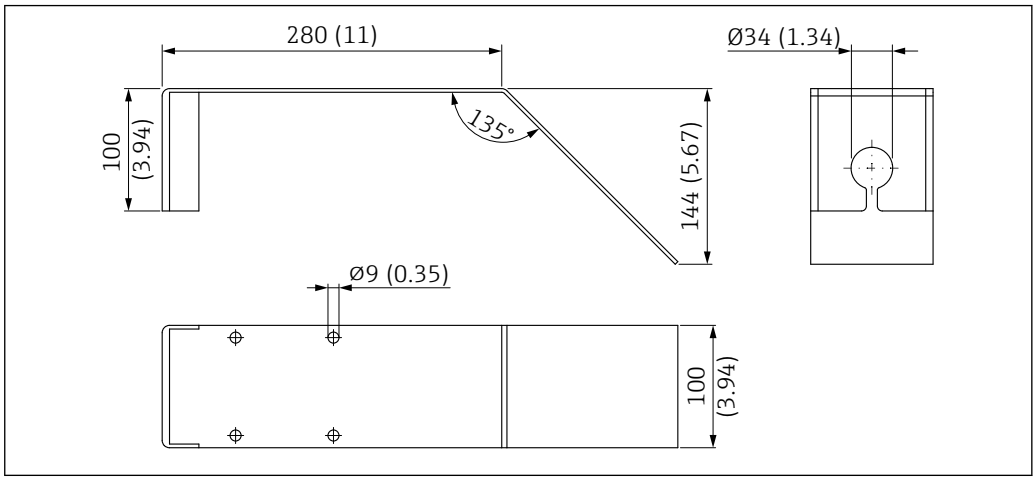

40 Dimensions of horizontal mounting bracket for sewer shafts. Unit of measurement mm (in)

Material
316L (1.4404)

Order number
71429905

12.8 Service-specific accessories

Applicator
Software for selecting and sizing Endress+Hauser measuring devices:
- Calculation of all the necessary data for identifying the optimum measuring device: e.g. pressure loss, accuracy or process connections.
- Graphic illustration of the calculation results

Administration, documentation and access to all project-related data and parameters over the entire life cycle of a project.

Applicator is available:
https://portal.endress.com/webapp/applicator

Configurator
Product Configurator - the tool for individual product configuration
- Up-to-the-minute configuration data
- Depending on the device: Direct input of measuring point-specific information such as measuring range or operating language
- Automatic verification of exclusion criteria
- Automatic creation of the order code and its breakdown in PDF or Excel output format
- Ability to order directly in the Endress+Hauser Online Shop

The Configurator is available on the Endress+Hauser website: www.endress.com -> Click "Corporate" -> Select your country -> Click "Products" -> Select the product using the filters and the search field -> Open the product page -> The "Configure" button to the right of the product image opens the Product Configurator.

W@M
Life cycle management for your plant
W@M supports you with a wide range of software applications over the entire process: from planning and procurement, to the installation, commissioning and operation of the measuring devices. All the relevant device information, such as the device status, spare parts and device-specific documentation, is available for every device over the entire life cycle.
The application already contains the data of your Endress+Hauser device. Endress+Hauser also takes care of maintaining and updating the data records.

W@M is available:
www.endress.com/lifecyclemanagement

13 Operating menu

13.1 Overview of the operating menu (SmartBlue)

Navigation Operating menu

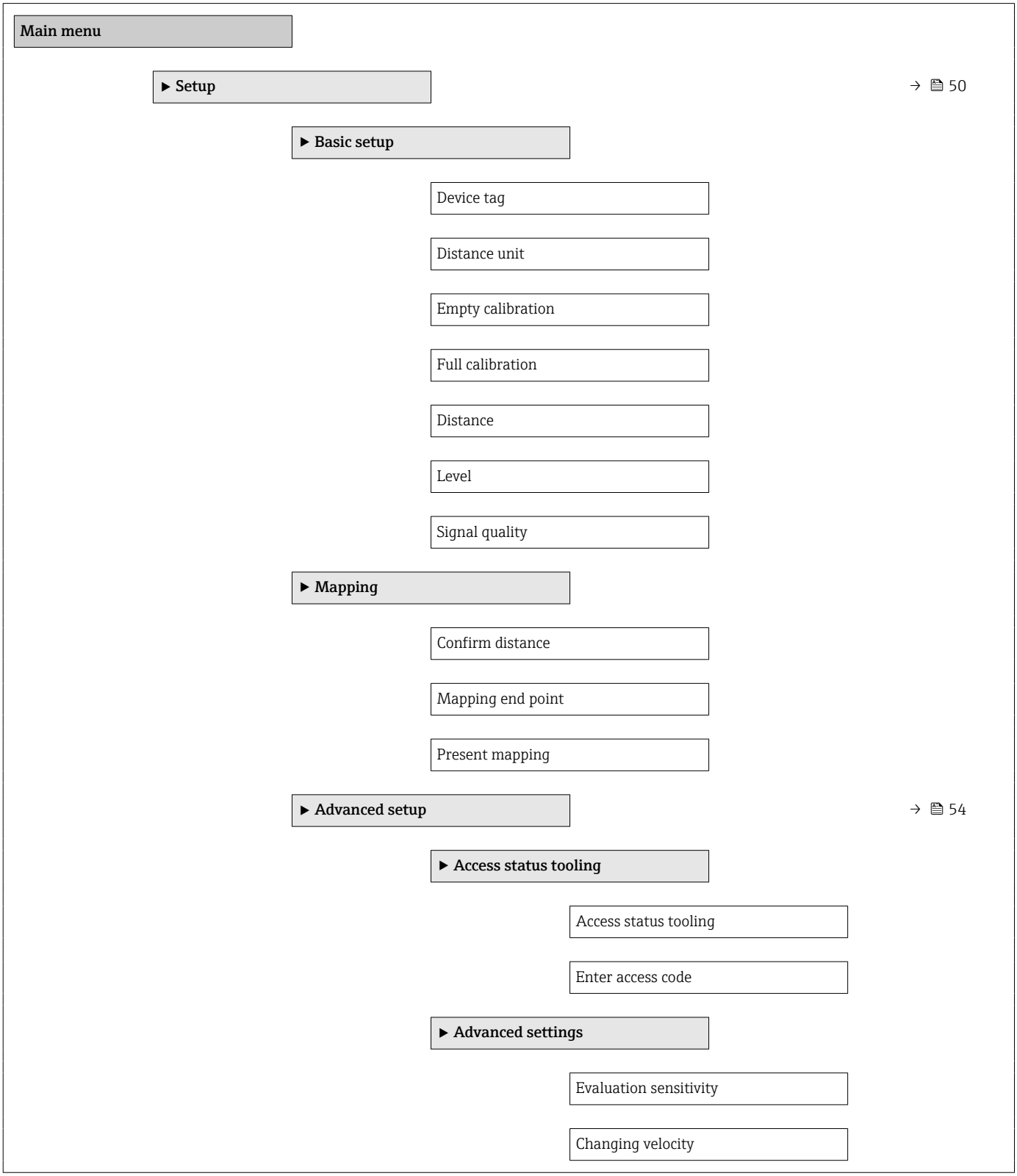

- First Echo sensitivity
- Output mode
- Blocking distance
- Level correction
- Evaluation distance
- Linearization type
- Level linearized
- **▶ Safety settings** → 58
  - Delay time echo lost → 58
  - Diagnostics echo lost → 58
- **▶ Current output** → 59
  - Output current → 59
  - Damping output → 59
  - Turn down → 59
  - 4 mA value → 60
  - 20 mA value → 60
  - Trim → 61
  - Trim value high → 61
  - Trim value low → 61
- **▶ Administration** → 62
  - **▶ Administration 1**
    - Define access code → 62
    - Confirm access code → 62
    - Device reset → 62

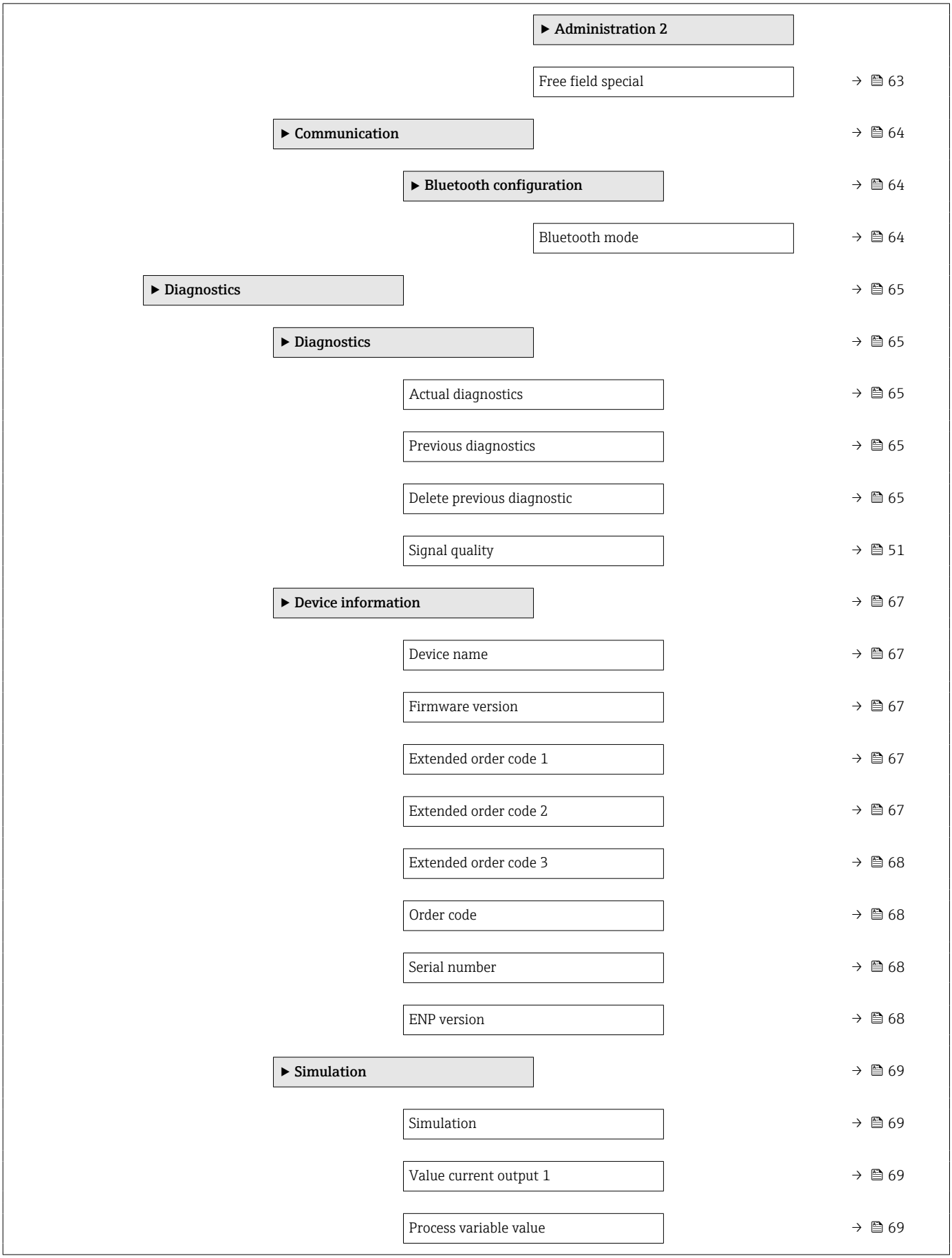
▶ Administration 2
Free field special → 63
▶ Communication → 64
▶ Bluetooth configuration → 64
Bluetooth mode → 64
▶ Diagnostics → 65
▶ Diagnostics → 65
Actual diagnostics → 65
Previous diagnostics → 65
Delete previous diagnostic → 65
Signal quality → 51
▶ Device information → 67
Device name → 67
Firmware version → 67
Extended order code 1 → 67
Extended order code 2 → 67
Extended order code 3 → 68
Order code → 68
Serial number → 68
ENP version → 68
▶ Simulation → 69
Simulation → 69
Value current output 1 → 69
Process variable value → 69

13.2 "Setup" menu

- : Indicates navigation to the parameter via operating tools
- : Indicates parameters that can be locked via the access code.

Navigation Setup

Device tag

Navigation Setup → Device tag

Description Enter a unique name for the measuring point to identify the device quickly within the plant.

User entry Character string comprising numbers, letters and special characters (32)

Factory setting EH_FMR10_####### (last 7 digits of the device serial number)

Distance unit

Navigation Setup → Distance unit

Description Used for the basic calibration (Empty / Full).

Selection

SI units	*US units*
m	ft

Empty calibration

Navigation Setup → Empty calibr.

Description Distance between process connection and minimum level (0%).

User entry 0.0 to 12 m

Factory setting 12 m

Full calibration

Navigation Setup → Full calibr.

Description Distance between minimum level (0%) and maximum level (100%).

User entry 0.0 to 12 m

Factory setting 12 m

Distance

Navigation Setup → Distance

Description Shows the distance D that is currently measured from the reference point (lower edge of flange / last thread of sensor) to the level.

User interface 0.0 to 12 m

Level

Navigation Setup → Level

Description Displays the measured level L (before linearization).
The unit is defined in the Distance unit parameter (factory setting = m).

User interface −99 999.9 to 200 000.0 m

Signal quality

Navigation Setup → Signal quality

Description Displays the signal quality of the level echo.

Meaning of the display options
- Strong:
The evaluated echo exceeds the threshold by at least 10 dB.
- Medium:
The evaluated echo exceeds the threshold by at least 5 dB.
- Weak:
The evaluated echo exceeds the threshold by less than 5 dB.
- No signal:
The device does not find a usable echo.

The signal quality indicated in this parameter always refers to the currently evaluated echo, either the level echo or the tank bottom echo.

In case of a lost echo (Signal quality = No signal) the device generates the following error message:
Diagnostic echo lost = Warning (factory setting) or Alarm, if the other option has been selected in Diagnostic echo lost.

User interface
- Strong
- Medium
- Weak
- No signal

Confirm distance

Navigation Setup → Confirm distance

Description Does the measured distance match the real distance?

Select one of the options:

- Manual map
To be selected if the range of mapping is to be defined manually in the 'Mapping end point' parameter. A comparison between actual and indicated distance is not required in this case.

- Distance ok
To be selected if the measured distance matches the actual distance. The device performs a mapping.

- Distance unknown
To be selected if the actual distance is unknown. A mapping can not be performed in this case.

- Factory map
To be selected if the present mapping curve (if one exists) is to be deleted. The device returns to the 'Confirm distance' parameter and a new mapping can be recorded.

Selection
- Manual map
- Distance ok
- Distance unknown
- Factory map

Mapping end point

Navigation Setup → Map. end point

Description This parameter defines up to which distance the new mapping is to be recorded.

The distance is measured from the reference point, i.e. from the lower edge of the mounting flange or sensor.

User entry 0 to 12 m

Present mapping

Navigation Setup → Present mapping

Description Indicates up to which distance a mapping has already been recorded.

User interface	0 to 100 m

13.2.1 "Advanced setup" submenu

Navigation Setup → Advanced setup

Access status tooling

Navigation Setup → Advanced setup → Access stat.tool

Description Shows the access authorization to the parameters via the operating tool.

Enter access code

Navigation Setup → Advanced setup → Ent. access code

Description The customer-specific access code, which has been defined in the **Define access code** parameter, must be entered to change from the Operator to the Maintenance mode. The device remains in the Operator mode if an incorrect access code is entered. If you lose the access code, please contact your Endress+Hauser sales center.

User entry 0 to 9 999

Evaluation sensitivity

Navigation Setup → Advanced setup → Evaluation sens.

Description Selection of the evaluation sensitivity

Options to select from:

- Low
Interferers but also small level signals are not recognized. The weighting curve is located high.

- Medium
The weighting curve is in a medium region.

- High
Small level signals but also interferers can be reliably detected. The weighting curve is located low.

Selection
- Low
- Medium
- High

Changing velocity

Navigation Setup → Advanced setup → Changing vel.

Description Selection of the expected draining or filling speed of the measured level.

Selection
- Slow <10 cm (0,4 in)/min
- Standard <1 m (40 in)/min
- Fast >1 m (40 in)/min
- No filter / test

First Echo sensitivity

Navigation Setup → Advanced setup → First Echo sens.

Description This parameter describes the band for First Echo evaluation.
Is measured / calculated down from the peak of the current level echo.

Options to select from:

- Low
The band for the first echo evaluation is very narrow. The evaluation stays longer at the found echo respectively does not jump to the next Echo or distortion signal.

- Medium
The band for the first echo evaluation has an average width.

- High
The band for the first echo evaluation is broad. The evaluation jumps earlier to the next echo or distortion signal.

Selection
- Low
- Medium
- High

Output mode

Navigation Setup → Advanced setup → Output mode

Description Select output mode between:

Ullage =
The remaining space in the tank or silo is indicated.

or

Level linearized =
The level is indicated (more precisely: the linearized value if a linearization has been activated).

Selection
- Ullage
- Level linearized

Blocking distance

Navigation Setup → Advanced setup → Blocking dist.

Description Specify blocking distance (BD).

No signals are evaluated within the blocking distance. Therefore, BD can be used to suppress interference signals in the vicinity of the antenna.

Note:
The measuring range should not overlap with the blocking distance.

User entry 0.0 to 12 m

Factory setting An automatic Blocking distance (→ 56) of at least 0.1 m (0.33 ft) is configured as standard. However, this can be overwritten manually (0 m (0 ft) is also permitted).
Automatic calculation of the Blocking distance = Empty calibration - Full calibration - 0.2 m (0.656 ft).
Each time a new entry is made in the **Empty calibration** parameter or **Full calibration** parameter, the **Blocking distance** parameter is recalculated automatically using this formula.
If the result of the calculation is a value < 0.1 m (0.33 ft), the Blocking distance of 0.1 m (0.33 ft) will continue to be used.

Level correction

Navigation Setup → Advanced setup → Level correction

Description The measured level is corrected by this value to compensate for a constant level error.

Level correction > 0:
The level is increased by this value.

Level correction < 0:
The level is decreased by this value.

User entry −25 to 25 m

Evaluation distance

Navigation Setup → Advanced setup → Evaluation dist.

Description Extended signal search area.
Is generally greater than the empty distance.
If the signal is found below the empty distance, '0' (empty) is indicated as measured value.
Only for signals, detected below the 'Evaluation distance', the error 'Echo Lost' is issued.

e.g. flow measurement in overflow weirs

User entry 0 to 12 m

Factory setting 11.5 m

Linearization type

Navigation Setup → Advanced setup → Lineariz. type

Description

Linearization types
Meaning of the options:
- None:
  The level is output in the level unit without being converted (linearized) beforehand.
- Table:
  The relationship between the measured level L and the output value (volume/flow/weight) is defined by a linearization table. This table consists of up to 32 value pairs, i.e. "level - volume" or "level - flow" or "level - weight".
- Note:
  Please use the function in SmartBlue to create/modify a linearization table.

Selection
- None
- Table

Level linearized

Navigation Setup → Advanced setup → Level linearized

Description Currently measured level

User interface Signed floating-point number

"Safety settings" submenu

Navigation Setup → Advanced setup → Safety sett.

Delay time echo lost

Navigation Setup → Advanced setup → Safety sett. → Delay echo lost

Description Define the delay time in the case of an echo loss.

After an echo loss, the device waits for the time specified in this parameter before reacting as specified in the Diagnostic echo lost parameter. This helps to avoid interruptions of the measurement by short-term interferences.

User entry 0 to 600 s

Diagnostics echo lost

Navigation Setup → Advanced setup → Safety sett. → Diagn. echo lost

Description At this parameter it can be set if in case of a lost echo a warning or an alarm is issued.

Selection
- Warning
- Alarm

"Current output" submenu

Navigation Setup → Advanced setup → Curr.output

Output current	
Navigation	Setup → Advanced setup → Curr.output → Output curr.
Description	Shows the actual calculated value of the output current.
User interface	3.59 to 22.5 mA

Damping output	
Navigation	Setup → Advanced setup → Curr.output → Damping out.
Description	Define time constant τ for the damping of the output current. Fluctuations of the measured value affect the output current with an exponential delay, the time constant τ of which is defined in this parameter. With a small time constant the output reacts immediately to changes of the measrued value. With a big time constant the reaction of the output is more delayed. For τ = 0 there is no damping.
User entry	0.0 to 300 s

Turn down	
Navigation	Setup → Advanced setup → Curr.output → Turn down
Description	Using the turn down functionality it is possible to map a section of the measuring range to the total range of the output current (4-20mA). The section is defined by the '4 mA value' and '20 mA value' parameters. Without the turn down, the complete measuring range (0 to 100%) is mapped to the current output (4 to 20mA).
Selection	▪ Off ▪ On

4 mA value

Navigation Setup → Advanced setup → Curr.output → 4 mA value

Description Value for 4-mA at 'Turn down parameter' = On

Using the turn down functionality it is possible to map a section of the measuring range to the total range of the output current (4-20mA). The section is defined by the '4 mA value' and '20 mA value' parameters.
Without the turn down, the complete measuring range (0 to 100%) is mapped to the current output (4 to 20mA).

Note:
If '20 mA value' is smaller than '4 mA value', the current output is inverted, which means that an increase of the process variable results in a decrease of the output current.

User entry Signed floating-point number

20 mA value

Navigation Setup → Advanced setup → Curr.output → 20 mA value

Description Value for 20-mA at 'Turn down' parameter = On

Using the turn down functionality it is possible to map a section of the measuring range to the total range of the output current (4-20mA). The section is defined by the '4 mA value' and '20 mA value' parameters.
Without the turn down, the complete measuring range (0 to 100%) is mapped to the current output (4 to 20mA).

Note:
If '20 mA value' is smaller than '4 mA value', the current output is inverted, which means that an increase of the process variable results in a decrease of the output current.

User entry Signed floating-point number

Factory setting 12 m

Trim

Navigation Setup → Advanced setup → Curr.output → Trim

Description

Select action for the recalibration of the current output.

The trim can be used to compensate a drift of the current output (which might be caused by very long cables or by a connected Ex barrier, for example).

Steps of the trim:

1. Select 'Trim' = 4 mA.

2. Measure the output current with a gauged multimeter. If it is not equal to 4 mA:
Enter measured value in the 'Trim value low' parameter.

3. Select 'Trim' = 20 mA.

4. Measure the output current with a gauged multimeter. If it is not equal to 20 mA:
Enter the measured current into the 'Trim value high' parameter.

5. Select 'Trim' = Calculate. The device calculates the new scaling of the output current and stores it in the RAM.

Selection

- Off
- 4 mA
- 20 mA
- Calculate
- Reset

Trim value high

Navigation Setup → Advanced setup → Curr.output → Trim value high

Description

Enter upper measured value for the trim (around 20 mA).

After this value has been entered:
Select 'Trim' = Calculate.
This initiates the recalibration of the current output.

User entry

18.0 to 22.0 mA

Trim value low

Navigation Setup → Advanced setup → Curr.output → Trim value low

Description

Enter lower measured value for the trim (around 4 mA).

After this value has been entered:
Select 'Trim' = Calculate.
This initiates the recalibration of the current output.

User entry

3.0 to 5.0 mA

"Administration" submenu

Navigation Setup → Advanced setup → Administration

Define access code

Navigation Setup → Advanced setup → Administration → Def. access code

Description Define release code for changing device operation mode.

If the factory setting is not changed or 0000 is defined as the access code, the device works in maintenance mode without write-protection and the configuration data of the device can then always be modified.

Once the access code has been defined, write-protected devices can only be changed to maintenance mode if the access code is entered in the Enter access code parameter.
The new access code is only valid after it has been confirmed in the Confirm access code parameter.

Please contact your Endress+Hauser Sales Center if you lose your access code.

User entry 0 to 9 999

Confirm access code

Navigation Setup → Advanced setup → Administration → Confirm code

Description Re-enter the entered access code to confirm.

User entry 0 to 9 999

Device reset

Navigation Setup → Advanced setup → Administration → Device reset

Description Reset the device configuration - either entirely or in part - to a defined state.

Selection
- Cancel
- To factory defaults

Free field special

Navigation Setup → Advanced setup → Administration → Free field spec.

Description Switch the free field option on or off.

This parameter can be switched on for free field applications (e.g. below bridges).

Caution:
The customer map (if one exists) is reset to the factory map!

Selection
- Off
- On

13.2.2 "Communication" submenu

Navigation Setup → Communication

"Bluetooth configuration" submenu

Navigation Setup → Communication → Bluetooth conf.

Bluetooth mode

Navigation Setup → Communication → Bluetooth conf. → Bluetooth mode

Description Enable or disable Bluetooth function..

Remark:
Switching to position 'Off' will disable remote access via the app with immediate effect. To re-establish a Bluetooth connection via the app: Please follow the advices in the manual.

Selection
- Off
- On

13.3 "Diagnostics" submenu

Navigation Diagnostics

Actual diagnostics

Navigation Diagnostics → Actual diagnos.

Description Displays current diagnostic message.

If several messages are active at the same time, the messages with the highest priority is displayed.

Previous diagnostics

Navigation Diagnostics → Prev.diagnostics

Description Displays the last diagnostic message, with its diagnostic information, which has been active before the current message.
The condition displayed may still apply.

Delete previous diagnostic

Navigation Diagnostics → Del. prev. diag.

Description Delete previous diagnostic message?

It is possible that the diagnostic message remains valid.

Selection
- No
- Yes

Signal quality

Navigation Diagnostics → Signal quality

Description

Displays the signal quality of the level echo.

Meaning of the display options
- Strong:
The evaluated echo exceeds the threshold by at least 10 dB.
- Medium:
The evaluated echo exceeds the threshold by at least 5 dB.
- Weak:
The evaluated echo exceeds the threshold by less than 5 dB.
- No signal:
The device does not find a usable echo.

The signal quality indicated in this parameter always refers to the currently evaluated echo, either the level echo or the tank bottom echo.

In case of a lost echo (Signal quality = No signal) the device generates the following error message:
Diagnostic echo lost = Warning (factory setting) or Alarm, if the other option has been selected in Diagnostic echo lost.

User interface

- Strong
- Medium
- Weak
- No signal

13.3.1 "Device information" submenu

Navigation Diagnostics → Device info

Device name

Navigation Diagnostics → Device info → Device name

Description Shows the name of the transmitter.

User interface Character string comprising numbers, letters and special characters

Firmware version

Navigation Diagnostics → Device info → Firmware version

Description Shows the device firmware version installed.

User interface Character string comprising numbers, letters and special characters

Extended order code 1

Navigation Diagnostics → Device info → Ext. order cd. 1

Description Shows the 1st part of the extended order code.

User interface Character string comprising numbers, letters and special characters

Extended order code 2

Navigation Diagnostics → Device info → Ext. order cd. 2

Description Shows the 2nd part of the extended order code.

User interface Character string comprising numbers, letters and special characters

Extended order code 3

Navigation Diagnostics → Device info → Ext. order cd. 3

Description Shows the 3rd part of the extended order code.

User interface Character string comprising numbers, letters and special characters

Order code

Navigation Diagnostics → Device info → Order code

Description Shows the device order code.

User interface Character string comprising numbers, letters and special characters

Serial number

Navigation Diagnostics → Device info → Serial number

Description Shows the serial number of the measuring device.

User interface Character string comprising numbers, letters and special characters

ENP version

Navigation Diagnostics → Device info → ENP version

Description Shows the version of the electronic nameplate (ENP).

User interface Character string comprising numbers, letters and special characters

13.3.2 "Simulation" submenu

Navigation Diagnostics → Simulation

Simulation

Navigation Diagnostics → Simulation → Simulation

Description Select process variable to be simulated.

The Simulation is used to simulate specific measuring values or other conditions. This helps to check the correct configuration of the device and connected control units.

Selection
- Off
- Current output
- Distance

Value current output

Navigation Diagnostics → Simulation → Value curr.out 1

Description Defines the value of the simulated output current.

User entry 3.59 to 22.5 mA

Process variable value

Navigation Diagnostics → Simulation → Proc. var. value

Description Value of the simulated process variable.

Downstream measured value processing and the signal output use this simulation value. In this way, users can verify whether the measuring device has been configured correctly.

User entry 0 to 20 m

Index

0 ... 9

4 mA value (Parameter) 60
20 mA value (Parameter) 60

A

Access status tooling (Parameter) 54
Accessories
  Device-specific 31
  Service-specific 46
Actual diagnostics (Parameter) 65
Administration (Submenu) 62
Advanced setup (Submenu) 54
Application 8

B

Blocking distance (Parameter) 56
Bluetooth configuration (Submenu) 64
Bluetooth mode (Parameter) 64
Bluetooth® wireless technology 22

C

Changing velocity (Parameter) 55
Communication (Submenu) 64
Confirm access code (Parameter) 62
Confirm distance (Parameter) 52
Current output (Submenu) 59

D

Damping output (Parameter) 59
Define access code (Parameter) 62
Delay time echo lost (Parameter) 58
Delete previous diagnostic (Parameter) 65
Designated use 8
Device information (Submenu) 67
Device name (Parameter) 67
Device replacement 30
Device reset (Parameter) 62
Device tag (Parameter) 50
Diagnostic event in the operating tool 28
Diagnostics (Submenu) 65
Diagnostics echo lost (Parameter) 58
Disposal 30
Distance (Parameter) 51
Distance unit (Parameter) 50
Document
  Function 5
Document function 5

E

Empty calibration (Parameter) 50
ENP version (Parameter) 68
Enter access code (Parameter) 54
Evaluation distance (Parameter) 56
Evaluation sensitivity (Parameter) 54
Extended order code 1 (Parameter) 67
Extended order code 2 (Parameter) 67
Extended order code 3 (Parameter) 68

F

Field of application
  Residual risks 8
Firmware version (Parameter) 67
First Echo sensitivity (Parameter) 55
Free field special (Parameter) 63
Full calibration (Parameter) 50

L

Level (Parameter) 51
Level correction (Parameter) 56
Level linearized (Parameter) 57
Linearization type (Parameter) 57

M

Maintenance 29
Mapping end point (Parameter) 52
Media 8
Menu
  Setup 50

O

Operational safety 9
Order code (Parameter) 68
Output current (Parameter) 59
Output mode (Parameter) 55

P

Present mapping (Parameter) 52
Previous diagnostics (Parameter) 65
Process variable value (Parameter) 69
Product safety 9

R

Repair concept 30
Replacing a device 30
Requirements concerning the staff 8
Return 30

S

Safety instructions
  Basic 8
Safety Instructions (XA) 6
Safety settings (Submenu) 58
Serial number (Parameter) 68
Setup (Menu) 50
Signal quality (Parameter) 51, 66
Simulation (Parameter) 69
Simulation (Submenu) 69
Submenu
  Administration 62
  Advanced setup 54
  Bluetooth configuration 64
  Communication 64
  Current output 59
  Device information 67
  Diagnostics 65

Safety settings 58
Simulation 69

T

Trim (Parameter) 61
Trim value high (Parameter) 61
Trim value low (Parameter) 61
Turn down (Parameter) 59

U

Use of the measuring device
see Designated use
Using measuring devices
Borderline cases 8
Incorrect use 8

V

Value current output 1 (Parameter) 69

W

Workplace safety 9



www.addresses.endress.com

Endress+Hauser

People for Process Automation