TI00111R/09/EN/17.25-00
71687682
2025-01-15

Technical Information
TH51, TH52 and TH56

General purpose MgO insulated thermocouples with connection head, extension lead wires or connectors for process and laboratory applications



Application

Magnesium Oxide (MgO) insulated thermocouples are used in many process and laboratory applications. They have many desirable characteristics making thermocouples a good choice for general and special purpose applications.

The sensors can be used on:
- Heat exchangers
- Power and recovery areas
- Furnaces, dryers, flue gas
- Compressor stations
- Process reactors
- Metallurgical and glass manufacturing

Head transmitter

All Endress+Hauser transmitters are available with enhanced accuracy and reliability compared to directly wired sensors. Easy customizing by choosing one of the following outputs and communication protocols:

- Analog output 4 to 20 mA
- HART®
- PROFIBUS® PA
- FOUNDATION Fieldbus™
- Bluetooth® connectivity (optional)

Field transmitter

Temperature field transmitters with HART® or FOUNDATION Fieldbus™ protocol for highest reliability in harsh industrial environments. Backlit display with large measured value, bargraph and fault condition indication for ease of reading.

Your benefits

- One source shopping for temperature measurement solutions. World class transmitter with integrated sensor offering.
  Remove and install straight out of the box!
- Improved galvanic isolation on most devices (2 kV)
- Simplified model structure: Competitively priced, offers great value. Easy to order and reorder. A single model number includes sensor and transmitter assembly for a complete point solution.
- All iTEMP transmitters provide long-term stability ≤ 0.05% per year

Endress+Hauser
People for Process Automation

Table of contents

Function and system design 3
Measuring principle 3
Measuring system 3

Input 4
Measured variable 4
Measurement range 4

Output 4
Output signal 4
Family of temperature transmitters 4
Galvanic isolation 5

Power supply 6
Terminal assignments 6

Performance characteristics 9
Reference conditions 9
Response time 9
Maximum measured error 9
Transmitter long-term stability 9
Insulation resistance 9
Calibration specifications 9

Installation conditions 9
Orientation 9
Installation instructions 10

Environment 10
Ambient temperature range 10
Shock and vibration resistance 10

Process 11
Process pressure limits 11

Mechanical construction 12
Design, dimensions 12
Hot or measuring junction 14
Weight 14
Material 15
Process connection 15
Housing 17
Field transmitters 20

Certificates and approvals 22

Ordering information 22

Accessories 23
Device-specific accessories 23
Service-specific accessories 23
System components 24

Documentation 24

Function and system design

Measuring principle

Thermocouples (TC)

Thermocouples are comparatively simple, robust temperature sensors which use the Seebeck effect for temperature measurement: if two electrical conductors made of different materials are connected at a point, a weak electrical voltage can be measured between the two open conductor ends if the conductors are subjected to a thermal gradient. This voltage is called thermoelectric voltage or electromotive force (emf.). Its magnitude depends on the type of conducting materials and the temperature difference between the "measuring point" (the junction of the two conductors) and the "cold junction" (the open conductor ends). Accordingly, thermocouples primarily only measure differences in temperature. The absolute temperature at the measuring point can be determined from these if the associated temperature at the cold junction is known or is measured separately and compensated for. The material combinations and associated thermoelectric voltage/temperature characteristics of the most common types of thermocouple are standardized in the IEC 60584 and ASTM E230/ANSI MC96.1 standards.

Measuring system

Endress+Hauser offers a complete portfolio of optimized components for the temperature measuring point – everything you need for the seamless integration of the measuring point into the overall facility. This includes:

- Power supply unit/barrier
- Display units
- Overvoltage protection

For more information, see the brochure 'System Components - Solutions for a Complete Measuring Point' (FA00016K)

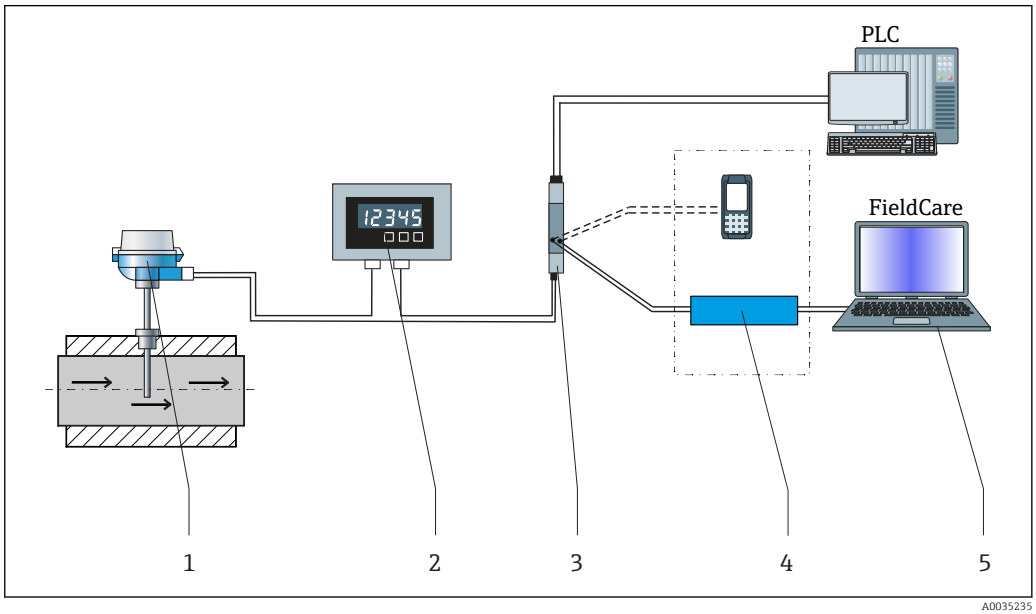

A0035235

1 Example of application, measuring point layout with additional Endress+Hauser components

1 *Installed thermometer with HART® communication protocol*
2 *RIA15 loop powered process display - It is integrated in the current loop and displays the measuring signal or HART® process variables in digital form. The process display unit does not require an external power supply. It is powered directly from the current loop. More information on this can be found in the Technical Information.*
3 *Active barrier RN42 - The RN42 (17.5 V_{DC}, 20 mA) active barrier has a galvanic isolated output for supplying voltage to loop powered transmitters. The universal power supply works with an input supply voltage of 24 to 230 V AC/DC, 0/50/60 Hz, which means that it can be used in all international power grids. More information on this can be found in the Technical Information.*
4 *Communication examples: HART® handheld communicator FieldXpert, Commubox FXA195 for intrinsically safe HART® communication with FieldCare via the USB interface, Bluetooth® technology with SmartBlue App.*
5 *FieldCare is a FDT-based plant asset management tool from Endress+Hauser, more details see section 'accessories'.*

Input

Measured variable

Temperature (temperature-linear transmission behavior)

Measurement range

Measuring range by type and size

Upper temperature limits for various sheath diameters °C (°F)							
Nominal diameter			Thermocouple type				
Sheath O.D.	Element wire Ø (in)	Element wire gauge	T	J	E	K	N
Ø 1/16 in	0.010	30	260 °C (500 °F)	440 °C (825 °F)	510 °C (950 °F)	920 °C (1690 °F)	
Ø 1/8 in	0.020	24	315 °C (600 °F)	520 °C (970 °F)	650 °C (1200 °F)	1070 °C (1960 °F)	
Ø 3/16 in	0.029	21	370 °C (700 °F)	620 °C (1150 °F)	730 °C (1350 °F)	1150 °C (2100 °F)	
Ø 1/4 in	0.039	19		720 °C (1330 °F)	820 °C (1510 °F)		
Ø 3/8 in	0.060	15					
Maximum element temperature range limits			−270 to +400 °C (−454 to +752 °F)	−210 to +1200 °C (−346 to +2192 °F)	−270 to +1000 °C (−454 to +1832 °F)	−270 to +1372 °C (−454 to +2500 °F)	−270 to +1300 °C (−454 to +2372 °F)

These values are valid for single and duplex thermocouples. The temperature limits given are intended only as a guide to the user and should not be taken as absolute values or as guarantees of satisfactory life or performance. These types and sizes are sometimes used at temperatures above the given limits, but usually at the expense of stability or life or both. In other instances, it may be necessary to reduce the above limits in order to achieve adequate service.

Duplex versions (2 elements) of type N with 1/16 in, 3/16 in and 3/8 in sheath diameter are not available. Thermocouples with 316 SS sheath are rated for a maximum temperature of 927 °C (1700 °F).

Output

Output signal

Generally, the measured value can be transmitted in one of two ways:

- Directly-wired sensors - sensor measured values forwarded without a transmitter.
- Via all common protocols by selecting an appropriate Endress+Hauser iTEMP temperature transmitter. All the transmitters listed below are mounted directly in the terminal head or as field transmitter and wired with the sensory mechanism.

Family of temperature transmitters

Thermometers fitted with iTEMP transmitters are an installation-ready complete solution to improve temperature measurement by significantly increasing measurement accuracy and reliability, when compared to direct wired sensors, as well as reducing both wiring and maintenance costs.

4 to 20 mA head transmitters
They offer a high degree of flexibility, thereby supporting universal application with low inventory storage. The iTEMP transmitters can be configured quickly and easily at a PC. Endress+Hauser offers free configuration software which can be downloaded from the Endress+Hauser Website.

HART® head transmitters
The iTEMP transmitter is a 2-wire device with one or two measuring inputs and one analog output. The device not only transfers converted signals from resistance thermometers and thermocouples, it also transfers resistance and voltage signals using HART® communication. Swift and easy operation, visualization and maintenance using universal configuration software like FieldCare, DeviceCare or FieldCommunicator 375/475. Integrated Bluetooth® interface for the wireless display of measured values and configuration via Endress +Hauser SmartBlue (app), optional.

PROFIBUS® PA head transmitters
Universally programmable iTEMP transmitter with PROFIBUS® PA communication. Conversion of various input signals into digital output signals. High measurement accuracy over the complete ambient temperature range. PROFIBUS PA functions and device-specific parameters are configured via fieldbus communication.

FOUNDATION Fieldbus™ head transmitter
Universally programmable iTEMP transmitter with FOUNDATION Fieldbus™ communication. Conversion of various input signals into digital output signals. High measurement accuracy over the complete ambient temperature range. All iTEMP are approved for use in all the main process control systems. The integration tests are performed in Endress+Hauser's 'System World'.

Head transmitter with PROFINET® and Ethernet-APL™
The iTEMP transmitter is a 2-wire device with two measuring inputs. The device not only transfers converted signals from resistance thermometers and thermocouples, it also transfers resistance and voltage signals using the PROFINET® protocol. Power is supplied via the 2-wire Ethernet connection according to IEEE 802.3cg 10Base-T1. The iTEMP can be installed as an intrinsically safe electrical apparatus in Zone 1 hazardous areas. The device can be used for instrumentation purposes in the terminal head form B (flat face) according to DIN EN 50446.

Head transmitter with IO-Link®
The iTEMP transmitter is an IO-Link® device with a measurement input and an IO-Link® interface. It offers a configurable, simple and cost-effective solution thanks to digital communication via IO-Link®. The device is mounted in a terminal head form B (flat face) as per DIN EN 5044.

Advantages of the iTEMP transmitters:
- Double or single sensor input (optionally for certain transmitters)
- Attachable display (optionally for certain transmitters)
- Unsurpassed reliability, accuracy and long-term stability in critical processes
- Mathematical functions
- Monitoring of the thermometer drift, sensor backup functionality, sensor diagnostic functions
- Sensor-transmitter-matching based on the Callendar van Dusen coefficients (CvD).

Field transmitter
Field transmitter with HART®, FOUNDATION Fieldbus™ or PROFIBUS® PA communication and backlighting. Can be read easily from a distance, in sunlight and at night. Large measurement value format, bar graphs and faults are displayed. The benefits are: dual sensor input, highest reliability in harsh industrial environments, mathematical functions, thermometer drift monitoring and sensor back-up functionality, corrosion detection.

Galvanic isolation

Galvanic isolation of Endress+Hauser iTEMP transmitters

Transmitter type	Sensor
TMT162 HART® Field transmitter	U = 2 kV AC
TMT71	
TMT72 HART®	
TMT82 HART®	
TMT84 PA	
TMT85 FF	
TMT142B	

In applications where fast response time ist needed, grounded thermocouples are recommended. This thermocouple design may cause a ground loop. This can be avoided by using ITEMP transmitters with high galvanic isolation

Power supply

Terminal assignments

Type of sensor connection

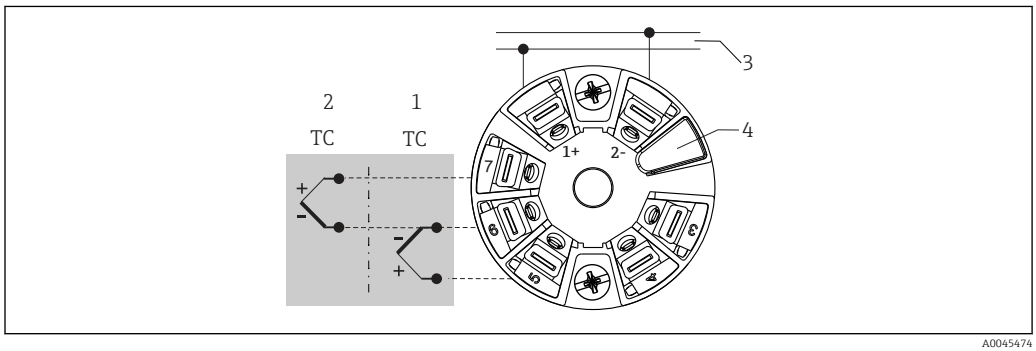

2 Head mounted transmitter TMT8x (dual input)

1 Sensor input 2
2 Sensor input 1
3 Bus connection and supply voltage
4 Display connection

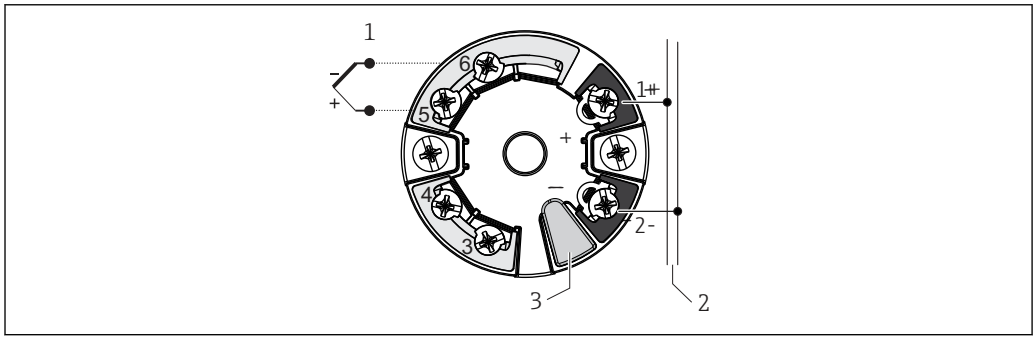

3 Head mounted transmitter TMT7x (single input)

1 Sensor input
2 Bus connection and supply voltage
3 Display connection and CDI interface

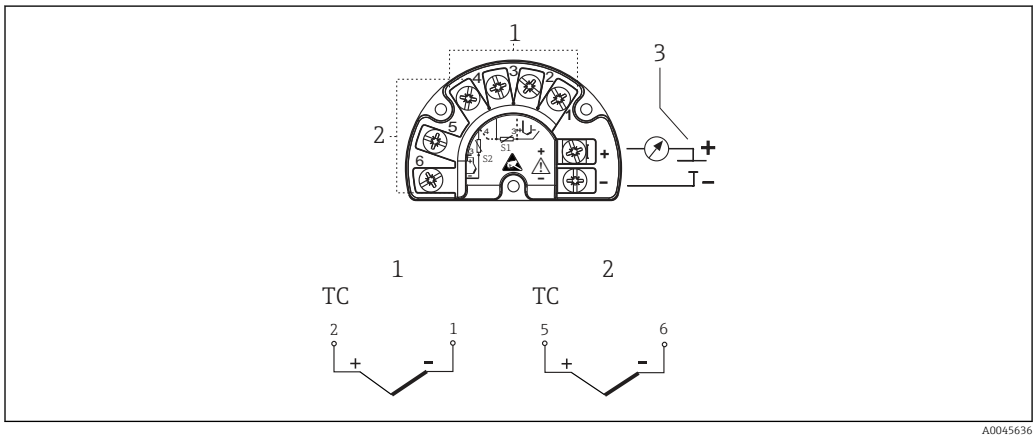

4 Field mounted transmitter TMT162 (dual Input) or TMT142B (single Input)

1 Sensor 1
2 Sensor 2 (not TMT142B)
3 Power supply field transmitter and analog output 4 to 20 mA or bus connection

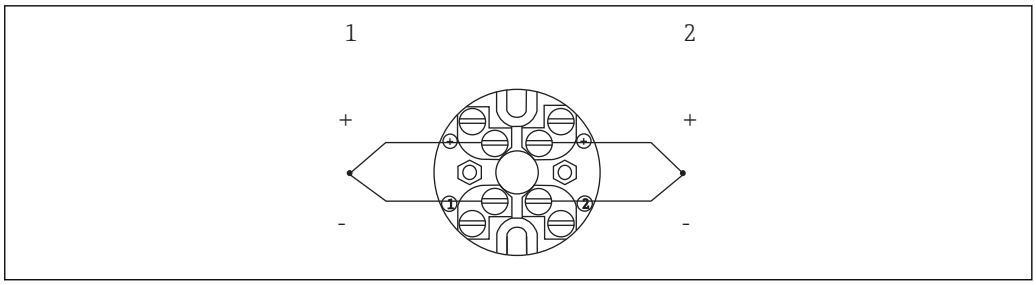

5 *Terminal block mounted*

1 Sensor 1
2 Sensor 2

The blocks and transmitters are shown as they sit inside the heads in reference to the conduit opening.

Integrated overvoltage protection

The integrated overvoltage protection module can be ordered as an optional extra [1]. The module protects the electronics from damage from overvoltage. Overvoltage occurring in signal cables (e.g. 4 to 20 mA, communication lines (fieldbus systems) and power supply is diverted to ground. The functionality of the transmitter is not affected as no problematic voltage drop occurs.

Connection data:

Maximum continuous voltage (rated voltage)	U_C = 42 V_{DC}
Nominal current	I = 0.5 A at $T_{amb.}$ = 80 °C (176 °F)
Surge current resistance ▪ Lightning surge current D1 (10/350 µs) ▪ Nominal discharge current C1/C2 (8/20 µs)	 ▪ I_{imp} = 1 kA (per wire) ▪ I_n = 5 kA (per wire) I_n = 10 kA (total)
Temperature range	–40 to +80 °C (–40 to +176 °F)
Series resistance per wire	1.8 Ω, tolerance ±5 %

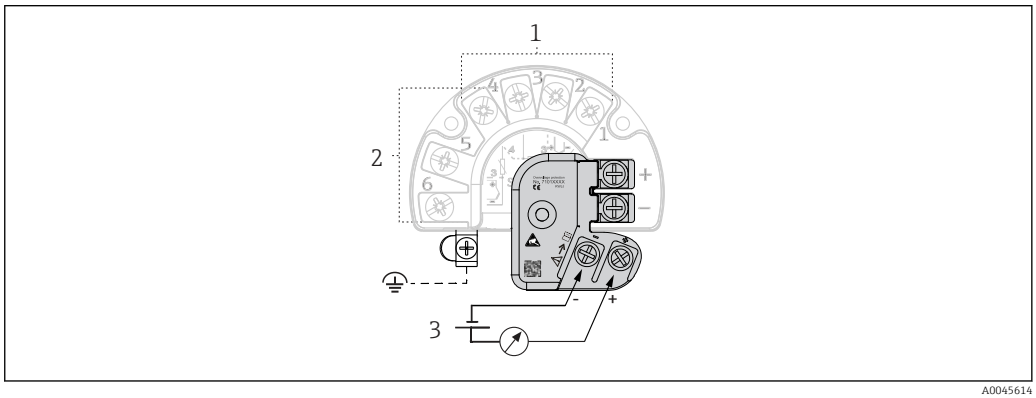

6 *Electrical connection of the overvoltage protection*

1 Sensor 1
2 Sensor 2
3 Bus connection and supply voltage

Grounding

The device must be connected to the potential equalization. The connection between the housing and the local ground must have a minimum cross-section of 4 mm^2 (13 AWG) . All ground connections must be secured tightly.

1) Available for the field transmitter with HART® 7 specification

Fieldbus connector

<table>
<tr><th>Type (dimensions in mm (in))</th><th>Specification</th></tr>
<tr><td rowspan="2">Fieldbus connector to PROFIBUS® -PA or FOUNDATION Fieldbus™
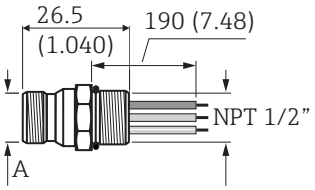

A0028083
A M12 on PROFIBUS® -PA connector or 7/8-16 UNC on FOUNDATION Fieldbus™ connector</td><td>▪ Ambient temperature: −40 to 150 °C (−40 to 300 °F)
▪ Degree of protection IP 67
Wiring diagram:
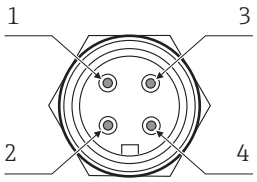

A0006023</td></tr>
<tr><td>PROFIBUS® -PA
Pos. 1: grey (shield)
Pos. 2: brown (+)
Pos. 3: blue (-)
Pos. 4: not connected

FOUNDATION Fieldbus™
Pos. 1: blue (-)
Pos. 2: brown (+)
Pos. 3: not connected
Pos. 4: ground (green/yellow)</td></tr>
</table>

Performance characteristics

Reference conditions

These data are relevant for determining the accuracy of the temperature transmitters used. More information on this can be found in the Technical Information of the iTEMP temperature transmitters.

Response time

63% response time per ASTM E839

Junction style	Ø1/16"	Ø1/8"	Ø3/16"	Ø1/4"	Ø3/8"
Grounded	0.3 s	0.6 s	0.9 s	1.3 s	3.5 s
Ungrounded	0.4 s	1.6 s	2.4 s	2.9 s	7.2 s

Response time for the sensor assembly without transmitter.

Maximum measured error

Thermocouples corresponding to ASTM E230

Type	Temperature range	Standard tolerance (IEC class 2)	Special tolerance (IEC class 1)
		[°C] whichever is greater	[°C] whichever is greater
E	0 to 870 °C (32 to 1600 °F)	±1.7 or ±0.5%	±1 or ±0.4%
J	0 to 760 °C (32 to 1400 °F)	±2.2 or ±0.75%	±1.1 or ±0.4%
K	0 to 1260 °C (32 to 2300 °F)	±2.2 or ±0.75%	±1.1 or ±0.4%
T	0 to 370 °C (32 to 700 °F)	±1 or 0.75%	±0.5 or ±0.4%
N	0 to 1260 °C (32 to 2300 °F)	±2.2 or ±0.75%	±1.1 or ±0.4%

For measurement errors in °F, calculate using equation above in °C, then mulitply the outcome by 1.8.

Transmitter long-term stability

≤ 0.1 °C (0.18 °F) / year or ≤ 0.05 % / year

Data under reference conditions; % relates to the set span. The larger value applies.

Insulation resistance

Insulation resistance for MgO insulated thermocouples with ungrounded hot junction between terminals and probe sheath, test voltage 500 V_{DC}.

1000 MΩ at 25 °C (77 °F)

These values for insulation resistance also apply between each thermocouple wire at single and duplex constructions with ungrounded hot junction.

Calibration specifications

The manufacturer provides comparison temperature calibrations from −20 to +300 °C (−4 to +573 °F) on the ITS-90 (International Temperature Scale). Calibrations are traceable to standards maintained by the National Institute of Standards and Technology (NIST). Calibration services are in conformance with ASTM E220. The report of calibration is referenced to the serial number of the RTD assembly.

Three point calibrations are provided, given that the specified temperatures are within the recommended range and the minimum length requirements are met as specified. The minimum length is based on overall length 'x' of the spring loaded insert.

Installation conditions

Orientation

No restrictions.

Installation instructions

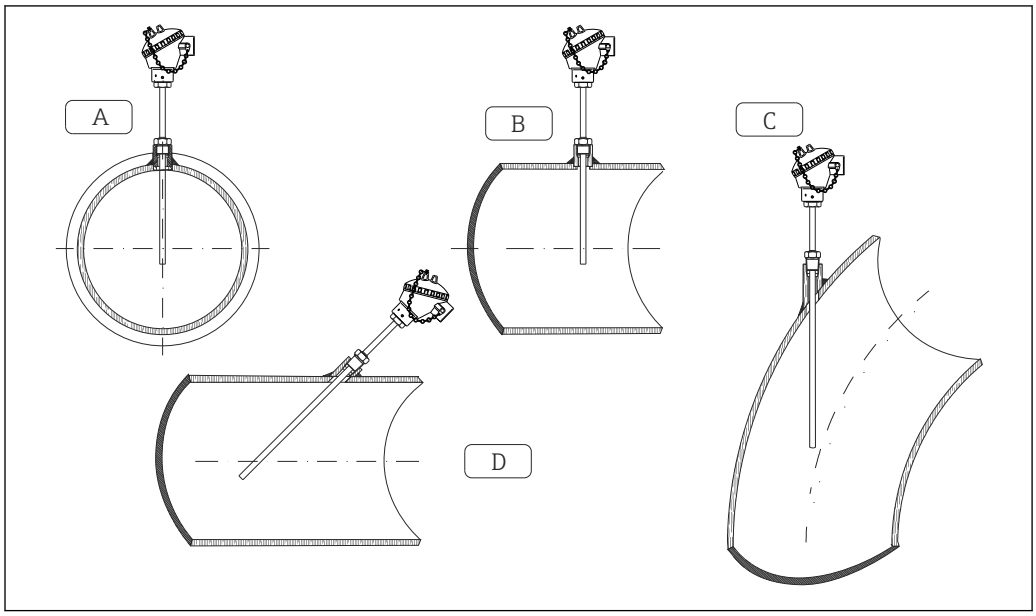

7 Installation examples

A-B In pipes with a small cross section the thermowell tip should reach or extend slightly past the center line of the pipe (= U)
C-D Tilted installation

The immersion length of the thermometer influences the accuracy. If the immersion length is too small then errors in the measurement are caused by heat conduction via the process connection and the container wall. If installing into a pipe then the immersion length should be at least half of the pipe diameter. A further solution could be an angled (tilted) installation (see C-D). When determining the immersion length all thermometer parameters and the process to be measured must be taken into account (e.g. flow velocity, process pressure).

- Installation possibilities: Pipes, tanks or other plant components
- Minimum immersion length should be 10 times the OD of the sheath, nominal.

Environment

Ambient temperature range

Terminal head	Temperature in °C (°F)
Without mounted head transmitter	Depends on the terminal head used and the cable gland or fieldbus connector, see 'Terminal heads' section
With mounted head transmitter	−40 to 85 °C (−40 to 185 °F) SIL mode (HART 7 transmitter): −40 to 70 °C (−40 to 158 °F)
With mounted head transmitter and display	−20 to 70 °C (−4 to 158 °F)
With mounted field transmitter	▪ Without display: −40 to 85 °C (−40 to 185 °F) ▪ With display and/or integrated overvoltage protection module: −40 to +80 °C (−40 to +176 °F) ▪ SIL mode: −40 to +75 °C (−40 to +167 °F)

Shock and vibration resistance

4 g/2 to 150 Hz as per IEC 60068-2-6

Process

Process pressure limits

p/T load curve example according to Dittrich

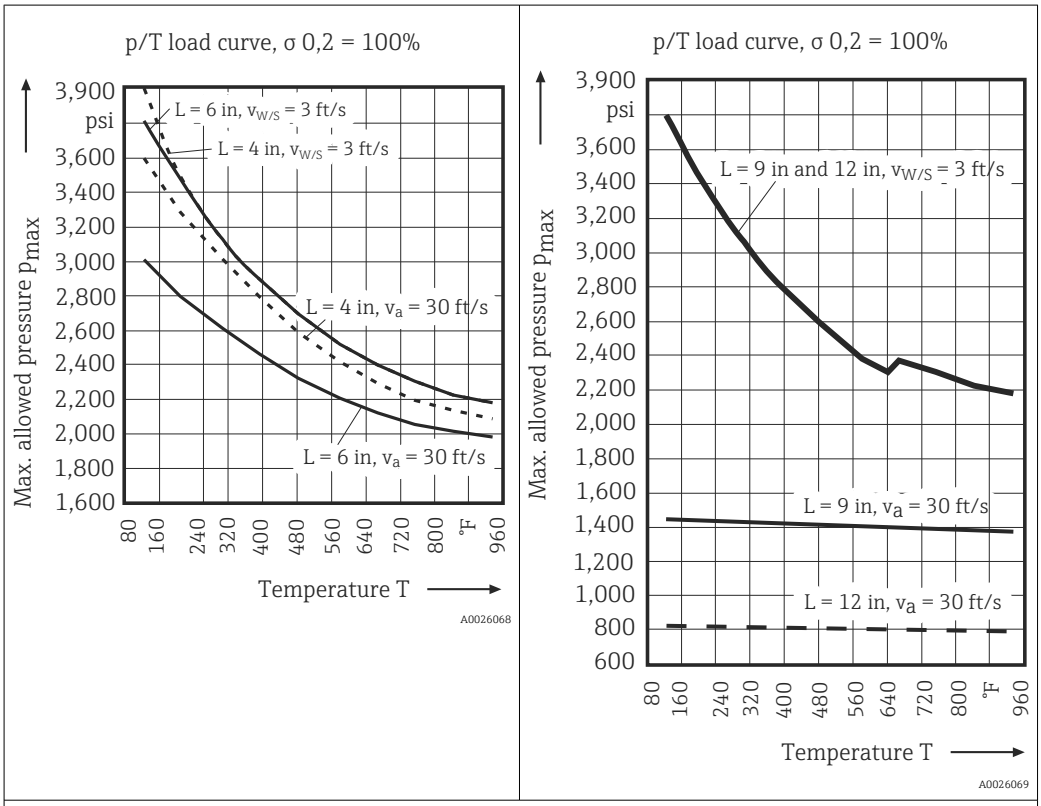

L = Insertion length
v_a = Flow velocity air
$v_{w/s}$ = Flow velocity water or stream
Example calculation: Probe = 316SS
Sheath Ø = ¼" ; 0.028" wall thickness

Avoid resonance frequency as this will cause damage to the probe!

- L = 4 and 6 in:
  Resonance frequency occurs when permanent flow velocity is at 18.1, 22.6 or 27.1 ft/s (air) for 6 in and/or 40.5, 50.6 or 60.8 ft/s (air) for 4 inch probe (T = 482 °F, p = 2700/2600 psi).
- L = 9 and 12 in:
  Resonance frequency occurs when permanent flow velocity is at 8.1, 10.1 or 12.1 ft/s (air) for 9 inch and/or 4.6, 5.7 or 6.8 ft/s (air) for 12 inch probe (T = 482 °F, p = 2600 psi).

The calculation was done for pipes only, for MgO insulated thermocouples the values might be higher. In any case for different lengths, other materials, variation in sheath diameter or wall thicknesses, stress analysis is recommended. Failures are caused by forces imposed by static pressure, steady state flow, and vibration.

Max. allowable process pressure (PSIG) for instrumentation with one time adjustable compression fittings.

Temperature	⅛" NPT and ¼" NPT compression fitting				
°C (°F)	Sheath Ø = 1/16"	Sheath Ø = ⅛"	Sheath Ø = 3/16"	Sheath Ø = ¼"	Sheath Ø = ⅜" [1]
−28 to 204 °C (−20 to 300 °F)	3 300	2 850	3 150	3 350	3 900
204 °C (400 °F)	3 200	2 750	3 050	3 250	3 800
260 °C (500 °F)	3 000	2 550	2 850	3 000	3 500
316 °C (600 °F)	2 800	2 400	2 700	2 850	3 300

Temperature	1/8" NPT and 1/4" NPT compression fitting				
°C (°F)	Sheath Ø = 1/16"	Sheath Ø = 1/8"	Sheath Ø = 3/16"	Sheath Ø = 1/4"	Sheath Ø = 3/8" 1)
371 °C (700 °F)	2 700	2 350	2 600	2 750	3 200
427 °C (800 °F)	2 650	2 300	2 550	2 650	3 100
482 °C (900 °F)	2 600	2 200	2 450	2 600	3 050
538 °C (1 000 °F)	2 400	2 100	2 300	2 450	2 850

1) not available with compression fittings 1/8" NPT

Re-adjustable compression fittings are not intended to be used for pressure retaining applications and should only be used for the mechanical holding of sensors.

Mechanical construction

Design, dimensions

For values related to the graphics please refer to the table below.

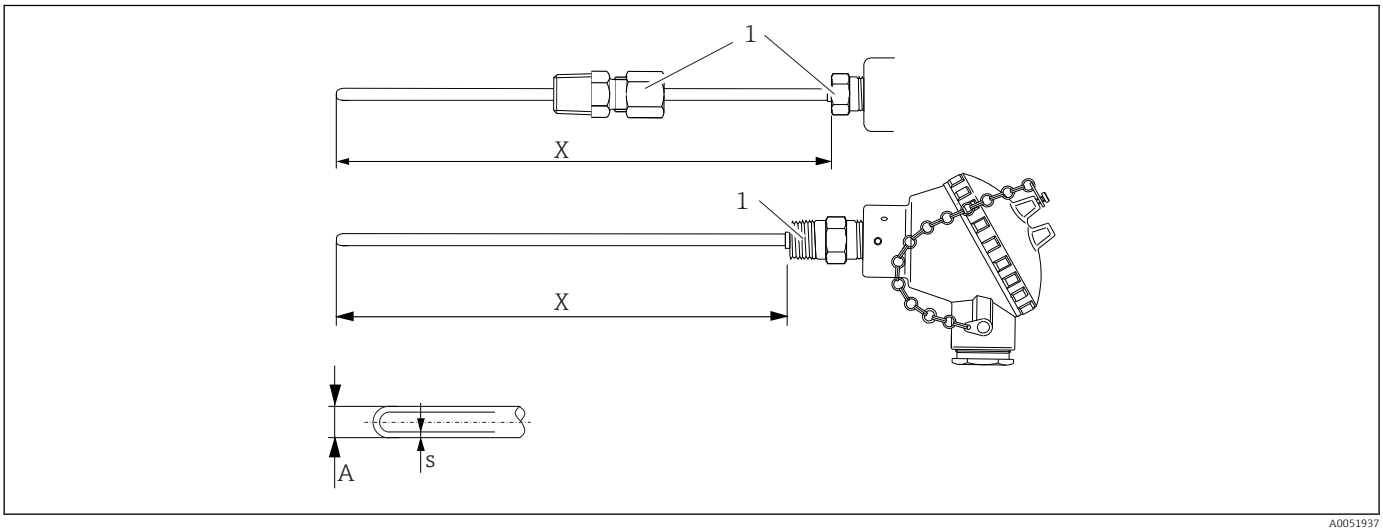

A0051937

8 Design of TH51

1 Process connection: Thread, none or compression fitting
A Sheath diameter
s Wall thickness

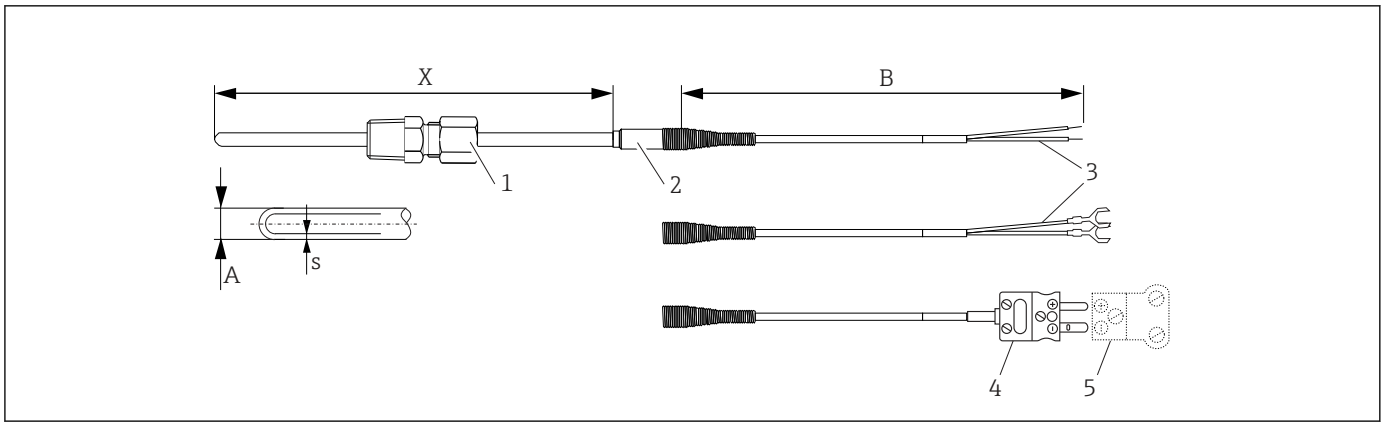

9 Design of TH52

1 Process connection not selected or with compression fitting
2 Extension leadwire transition with relief spring (400 °F)
3 Leadwire termination: Stripped leads or stripped leads with fork lugs
4 Plug version
5 Female jack
A Sheath diameter
B Wire length
s Wall thickness

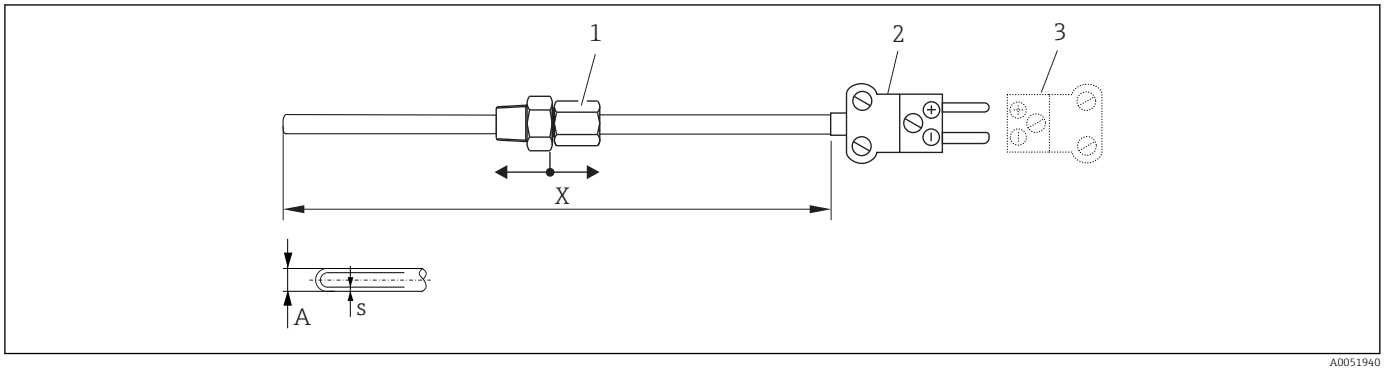

10 Design of TH56

1 Process connection not selected or with compression fitting
2 Plug version
3 Female jack
A Sheath diameter
s Wall thickness

Duplex version (2 elements) of TH56 is not available.

Dimensions in inches

Immersion length X			Wire length B	Sheath diameter A	Wall thickness S
TH51	TH52	TH56			
4", 6", 9", 12"	6", 12", 18", 24"	12", 18", 24", 48", 72", 96"	48", 72", 120" specified length 12" to 300" in 12" increments	Ø1/16"	0.007"
				Ø1/8"	0.014"
				Ø3/16"	0.022"
				Ø1/4"	0.029"
specified length 2" to 96" in ½" increments				Ø3/8"	0.045"

Hot or measuring junction

Grounded junction

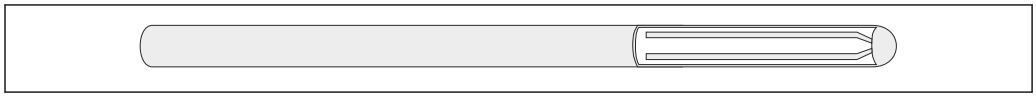

A0026086

11 *Grounded junction*

The thermocouple junction is welded securely into the closure end of the sheath, becoming an integral part of the weld. This is a good general purpose, low cost junction providing faster response times than an ungrounded junction of similar sheath diameter. Grounded junctions should not be used with Type T thermocouples, due to the copper wire. For a reliable temperature reading of grounded thermocouples transmitters with galvanic isolation are strongly recommended. iTEMP transmitters have galvanic isolation of min. 2 kV (from the sensor input to the output and the housing).

Ungrounded junction

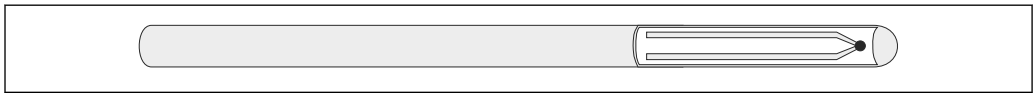

A0026087

12 *Ungrounded junction*

The welded thermocouple junction is fully isolated from the welded closed end sheath. This junction provides electrical isolation to reduce problems associated with electrical interference. Ungrounded junctions are also recommended for use in extreme positive or negative temperatures, rapid thermal cycling and for ultimate corrosion resistance of the sheath alloy. iTEMP transmitters have an excellent noise immunity (EMC) meeting all requirements listed under IEC 61326 for use in noisy environments.

Dual ungrounded elements supplied with individually isolated junctions, except Ø$^{1}/_{16}$" which are supplied with common junctions.

Weight

0.5 to 2.5 kg (1 to 5.5 lb)

Material

Process connection, terminal head and sheath

The temperatures for continuous operation specified in the following table are only intended as reference values for use of the various materials in air and without any significant compressive load. The maximum operation temperatures are reduced considerably in some cases where abnormal conditions such as high mechanical load occur or in aggressive media.

Material name	Short form	Recommended max. temperature for continuous use in air	Properties
AISI 316/ 1.4401	X5CrNiMo17-12-2	650 °C (1 202 °F) [1]	▪ Austenitic, stainless steel ▪ High corrosion resistance in general ▪ Particularly high corrosion resistance in chlorine-based and acidic, non-oxidizing atmospheres through the addition of molybdenum (e.g. phosphoric and sulfuric acids, acetic and tartaric acids with a low concentration)
AISI 316L/ 1.4404 1.4435	X2CrNiMo17-12-2 X2CrNiMo18-14-3	650 °C (1 202 °F) [1]	▪ Austenitic, stainless steel ▪ High corrosion resistance in general ▪ Particularly high corrosion resistance in chlorine-based and acidic, non-oxidizing atmospheres through the addition of molybdenum (e.g. phosphoric and sulfuric acids, acetic and tartaric acids with a low concentration) ▪ Increased resistance to intergranular corrosion and pitting ▪ Compared to 1.4404, 1.4435 has even higher corrosion resistance and a lower delta ferrite content
Alloy600/ 2.4816	NiCr15Fe	1 100 °C (2 012 °F)	▪ A nickel/chromium alloy with very good resistance to aggressive, oxidizing and reducing atmospheres, even at high temperatures ▪ Resistant to corrosion caused by chlorine gas and chlorinated media as well as many oxidizing mineral and organic acids, sea water etc. ▪ Corrosion from ultrapure water ▪ Not to be used in a sulfur-containing atmosphere

1) Can be used to a limited extent up to 800 °C (1472 °F) for low compressive loads and in non-corrosive media. Please contact your Endress+Hauser sales team for further information.

Process connection

Thread

Threaded process connection	Version	Thread length TL	Width across flats	Max. process pressure
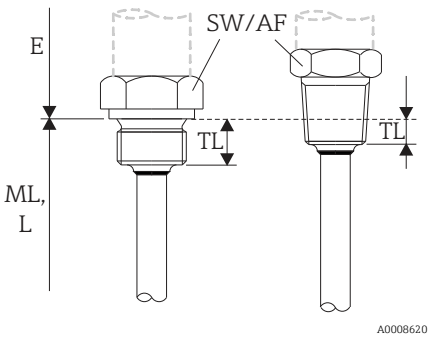	G ½" DIN / BSP [1]	0.6 in	1.06 in	Maximum static process pressure for threaded process connection: [2] 400 bar (5 802 psi) at +400 °C (+752 °F)
	NPT ½"	0.32 in	0.87 in	

13 *Cylindrical (left side) and conical (right side) version*

1) DIN ISO 228 BSPP
2) Maximum pressure specifications only for the thread. The failure of the thread is calculated, taking the static pressure into consideration. The calculation is based on a fully tightened thread (TL = thread length)

Compression fitting

All dimensions in inch

Re-adjustable compression fittings in stainless steel with FEP ferrule

Type of fitting	Tube size - Outer diameter (T) in inch	Process thread (PT) in inch	Length (L) in inch
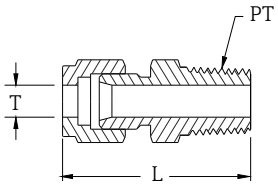	1/8	1/8" NPT	1 1/4
	3/16	1/8" NPT	1 1/4
	1/4	1/4" NPT	1 1/2
	3/8	1/4" NPT	1 1/2
	1/4	1/8" NPT	1 1/4
	1/8	1/4" NPT	1 1/2
	3/16	1/4" NPT	1 1/2
	1/4	1/2 NPT	1 3/4

One-time adjustable compression fittings in stainless steel with SS ferrule

Type of fitting	Tube size - Outer diameter (T) in inch	Process thread (PT) in inch	Length (L) in inch
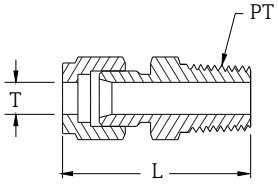	1/8	1/8" NPT	1 1/4
	3/16	1/8" NPT	1 1/4
	1/4	1/8" NPT	1 1/4
	1/8	1/4" NPT	1 1/2
	3/16	1/4" NPT	1 1/2
	1/4	1/4" NPT	1 1/2
	3/8	1/4" NPT	1 1/2
	1/4	1/2 NPT	1 3/4

Housing

Terminal heads

All terminal heads have an internal shape and size in accordance with DIN EN 50446, flat face and a thermometer connection with a ½" NPT thread. All dimensions in mm (in). Specifications without head transmitter installed. For ambient temperatures with head transmitter installed, see the 'Environment' section.

As a special feature, Endress+Hauser offers terminal heads with optimized terminal accessibility for easy installation and maintenance.

Some of the specifications listed below may not be available on this product line.

As illustrated in the following diagram, the length of the extension neck can influence the temperature in the terminal head. This temperature must remain within the limit values defined in the "Operating conditions" section.

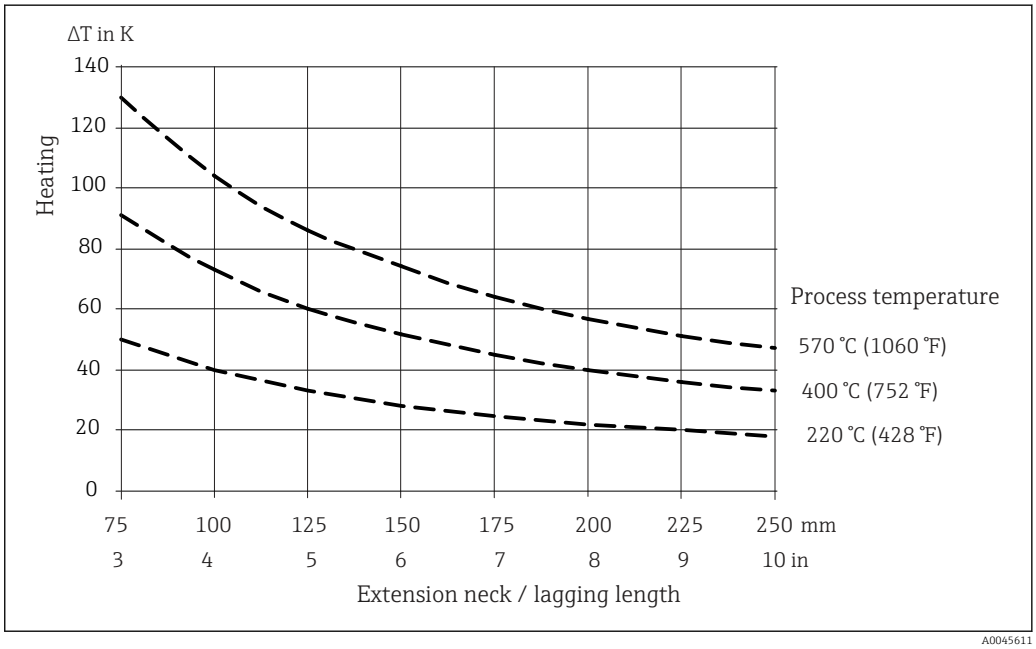

14 *Heating of the terminal head as a function of the process temperature. Temperature in terminal head = ambient temperature 20 °C (68 °F)+ ΔT*

The diagram can be used to calculate the transmitter temperature.

Example: At a process temperature of 220 °C (428 °F) and with a lagging length of 100 mm (3.94 in), the heat conduction is 40 K (72 °F). The transmitter temperature is therefore 40 K (72 °F) plus the ambient temperature, e.g. 25 °C (77 °F): 40 K (72 °F) + 25 °C (77 °F) = 65 °C (149 °F).

Result: The temperature of the transmitter is o.k., the length of the lagging is sufficient.

TA30H with display window in cover	Specification
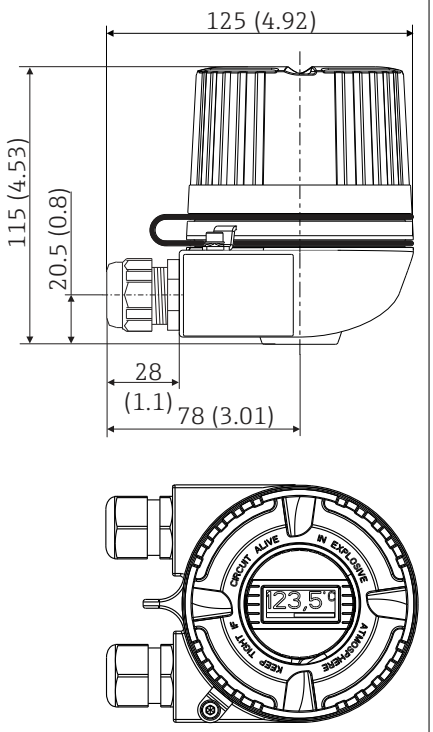	▪ Flameproof (XP) version, explosion-protected, captive screw cap, available with one or two cable entries ▪ Degree of protection: IP 66/68, NEMA Type 4x Encl. Ex-version: IP 66/67 ▪ Temperature: −50 to +150 °C (−58 to +302 °F) for rubber seal without cable gland (observe max. permitted temperature of cable gland!) ▪ Material: ▪ Aluminum; polyester powder coated ▪ Stainless steel 316L without coating ▪ Dry lubricant Klüber Syntheso Glep 1 ▪ Display window: single-pane safety glass according to DIN 8902 ▪ Thread: NPT ½", NPT ¾", M20x1.5, G½" ▪ Color of aluminum head: blue, RAL 5012 ▪ Color of aluminum cap: gray, RAL 7035 ▪ Weight: ▪ Aluminium approx. 860 g (30.33 oz) ▪ Stainless steel approx. 2 900 g (102.3 oz) ▪ Head transmitter optionally available with TID10 display When the housing cover is unscrewed: Before fastening, clean the threads in the cover and on the lower part of the housing and lubricate if necessary (recommended lubricant: Klüber Syntheso Glep 1).

TA30R (optionally with display window in cover)	Specification
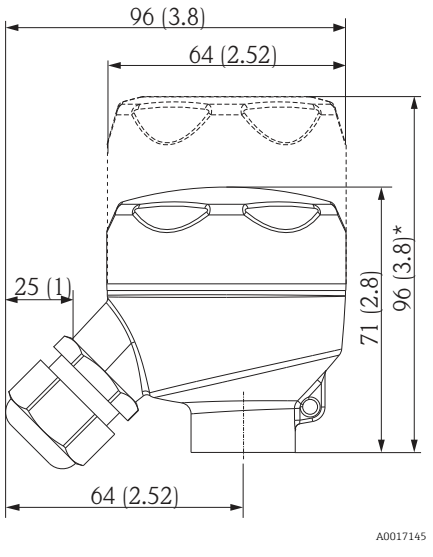 * Dimensions of version with display window in cover	▪ Degree of protection - standard version: IP69K (NEMA Type 4x encl.) Degree of protection - version with display window: IP66/68 (NEMA Type 4x encl.) ▪ Temperature: −50 to +130 °C (−58 to +266 °F) without cable gland ▪ Material: stainless steel 316L, abrasive-blasted or polished Seals: silicone, optional EPDM for applications free from paint-wetting impairment substances Display window: polycarbonate (PC) ▪ Cable entry thread NPT ½" and M20x1.5 ▪ Weight ▪ Standard version: 360 g (12.7 oz) ▪ Version with display window: 460 g (16.23 oz) ▪ Display window in cover optionally for head transmitter with display TID10 ▪ Ground terminal: internal as standard ▪ Available with sensors with 3-A® symbol ▪ Not allowed for Class II and III applications

TU401	Specification
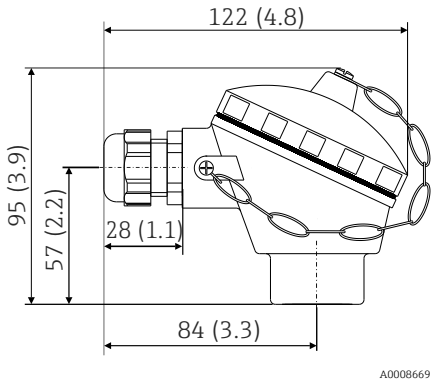	▪ Protection class: IP65 (NEMA Type 4x encl.) ▪ Temperature: −40 to 130 °C (−40 to 266 °F) silicone, up to 100 °C (212 °F) rubber seal without cable gland (observe max. permitted temperature of the cable gland!) ▪ Material: aluminum alloy with polyester or epoxy coating, rubber or silicone seal under the cover ▪ Cable entry: M20x1.5 or plug M12x1 PA ▪ Protection armature connection: M24x1.5, G 1/2" or NPT 1/2" ▪ Head color: blue, RAL 5012 ▪ Cap color: gray, RAL 7035 ▪ Weight: 300 g (10.58 oz)

TU401 (TA30D style)	Specification
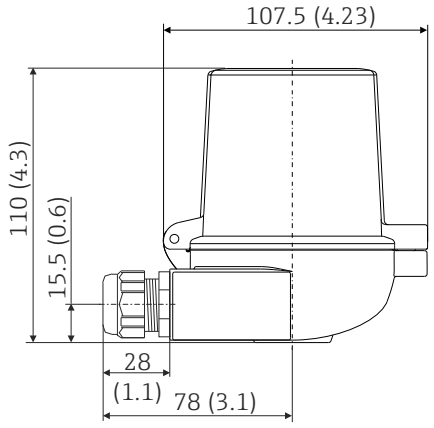	▪ Available with one or two cable entries ▪ Protection class: IP66/68 (NEMA Type 4x encl.) ▪ Temperature: −50 to +150 °C (−58 to +302 °F) without cable gland ▪ Material: aluminum, polyester powder coated Seals: silicone ▪ Threaded cable entry: G ½", ½" NPT and M20x1.5 ▪ Protection armature connection: M24x1.5 ▪ Two head transmitters can be mounted. In the standard version, one transmitter is mounted in the terminal head cover and an additional terminal block is installed directly on the insert. ▪ Head color: blue, RAL 5012 ▪ Cap color: gray, RAL 7035 ▪ Weight: 390 g (13.75 oz) ▪ Ground terminal, internal and external ▪ With 3-A symbol

TU401 (TA30S style)	Specification
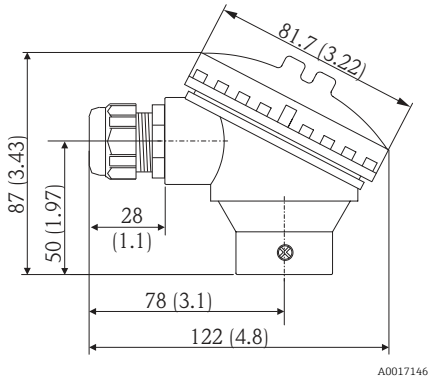	▪ Degree of protection: IP65 (NEMA Type 4x encl.) ▪ Temperature: −40 to +85 °C (−40 to +185 °F) without cable gland ▪ Material: polypropylene (PP), FDA-compliant, seals: O-ring EPDM ▪ Cable entry thread: ¾" NPT (with adapter for ½" NPT), M20x1.5 ▪ Protective assembly connection: ½" NPT ▪ Color: white ▪ Weight: approx. 100 g (3.5 oz) ▪ Ground terminal: only internal via auxiliary terminal **⚠ CAUTION** **Potential electrostatic charging hazard** ► Not recommended for use in hazardous (classified) locations.

Field transmitters

Temperature field transmitter iTEMP TMT162	Specification
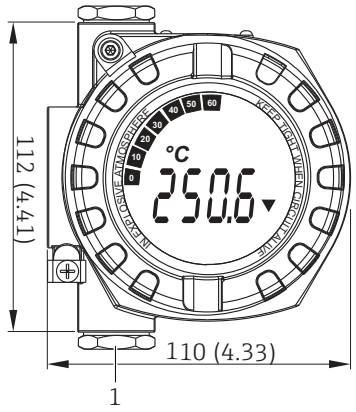 *1 Instrument connection for direct mounting assembly* * Dimensions without display = 112 mm (4.41 in)	▪ Separate electronics compartment and connection compartment ▪ Protection class: IP67, NEMA type 4x ▪ Material: Die-cast aluminum housing AlSi10Mg with powder coating on polyester base or stainless steel 316L ▪ Display rotatable in 90° increments ▪ Cable entry: 2x ½" NPT ▪ Brilliant backlit display with ease of visibility in bright sunshine or pitch darkness ▪ Gold plated terminals to avoid corrosion and additional measurement errors ▪ SIL certification as per IEC 61508:2010 (HART-protocol)

Temperature field transmitter iTEMP TMT162 for hygienic applications	Specification
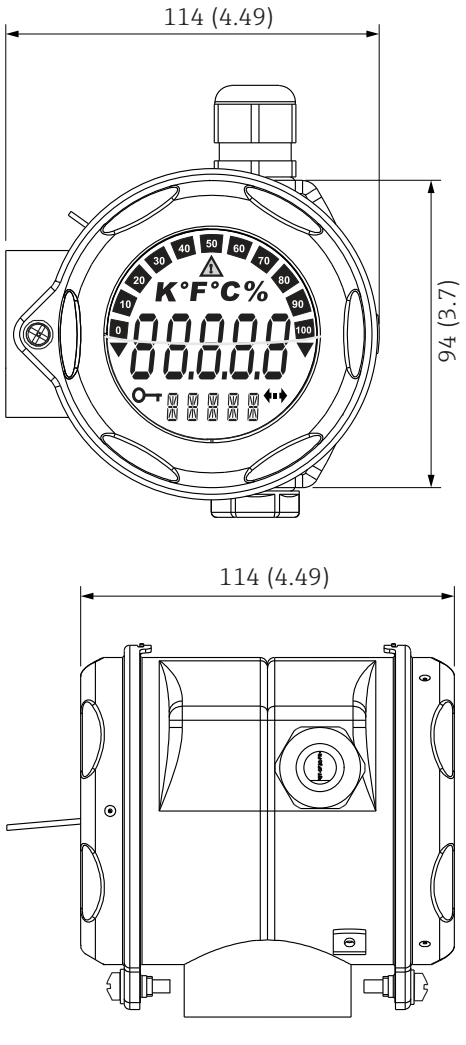 * Dimensions without display = 112 mm (4.41 in)	▪ Material: Stainless steel 1.4435 (AISI 316L) for hygienic applications ▪ Separate electronics compartment and connection compartment ▪ Display rotatable in 90° increments ▪ Cable entry: 2 x ½" NPT ▪ Degree of protection (IP69K) ▪ Brilliant backlit display with ease of visibility in bright sunshine or pitch darkness ▪ Gold plated terminals to avoid corrosion and additional measurement errors

Temperature field transmitter iTEMP TMT142B	Specification
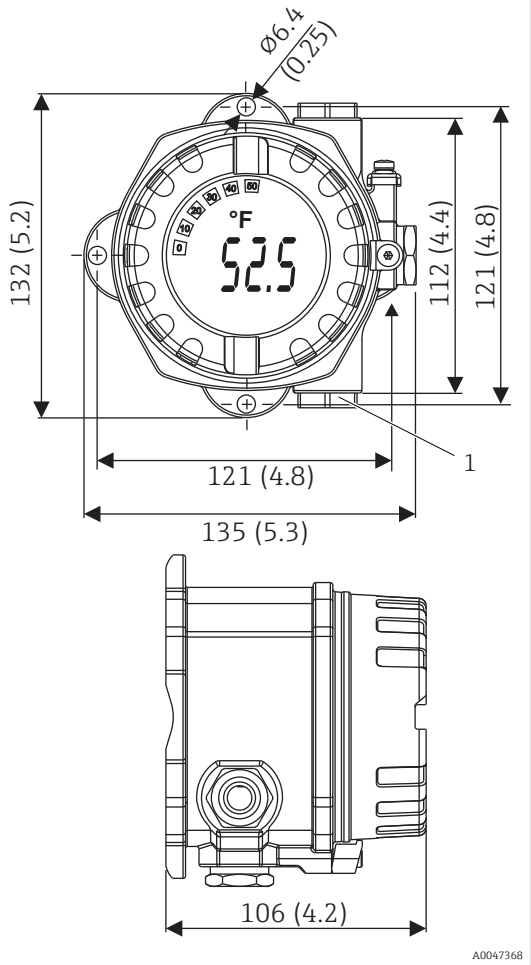 *1 Instrument connection for direct mounting assembly*	▪ Protection class: IP66/67, NEMA type 4x ▪ Material: Die-cast aluminum housing AlSi10Mg with powder coating on polyester base or stainless steel 316L ▪ Display rotatable in 90° increments ▪ Integrated Bluetooth® interface for wireless measured value display and parameter configuration, optional ▪ Brilliant backlit display with ease of visibility in bright sunshine or pitch darkness ▪ Gold plated terminals to avoid corrosion and additional measurement errors

Certificates and approvals

Current certificates and approvals for the product are available at www.endress.com on the relevant product page:

1. Select the product using the filters and search field.
2. Open the product page.
3. Select **Downloads**.

Ordering information

Detailed ordering information is available from your nearest sales organization www.addresses.endress.com or in the Product Configurator at www.endress.com:

1. Select the product using the filters and search field.
2. Open the product page.

3. Select **Configuration**.

Product Configurator - the tool for individual product configuration
- Up-to-the-minute configuration data
- Depending on the device: direct input of information specific to the measuring point, such as the measuring range or operating language
- Automatic verification of exclusion criteria
- Automatic creation of the order code and its breakdown in PDF or Excel output format
- Ability to order directly in the Endress+Hauser Online Shop

Accessories

Various accessories, which can be ordered with the device or subsequently from Endress+Hauser, are available for the device. Detailed information on the order code in question is available from your local Endress+Hauser sales center or on the product page of the Endress+Hauser website: www.endress.com.

Device-specific accessories

Mounting bracket	SS316L, for tube 1.5...3" Order code: 51007995
Spare Parts Kit Cover TA30R	XPT0004-
Cable gland	½" NPT, D4.5-8.5, IP 68 Order code: 51006845
Configuration kit TXU10	Configuration kit for PC-programmable transmitter with setup software and interface cable for PC with USB port Order code: TXU10-xx
Integrated overvoltage protection module	The module protects the electronics from overvoltage. Available for TMT162 housing (not T17 hygienic version).

Service-specific accessories

Applicator

Software for selecting and sizing Endress+Hauser measuring devices:
- Calculation of all the necessary data for identifying the optimum measuring device: e.g. pressure loss, accuracy or process connections.
- Graphic illustration of the calculation results

Administration, documentation and access to all project-related data and parameters over the entire life cycle of a project.

Applicator is available:
https://portal.endress.com/webapp/applicator

Configurator

Product Configurator - the tool for individual product configuration
- Up-to-the-minute configuration data
- Depending on the device: direct input of information specific to the measuring point, such as the measuring range or operating language
- Automatic verification of exclusion criteria
- Automatic creation of the order code and its breakdown in PDF or Excel output format
- Ability to order directly in the Endress+Hauser Online Shop

The Configurator is available at www.endress.com on the relevant product page:

1. Select the product using the filters and search field.
2. Open the product page.
3. Select **Configuration**.

FieldCare SFE500
FieldCare is a configuration tool for Endress+Hauser and third-party field devices based on DTM technology.
The following communication protocols are supported: HART, WirelessHART, PROFIBUS, FOUNDATION Fieldbus, Modbus, IO-Link, EtherNet/IP, PROFINET and PROFINET APL.

Technical Information TI00028S

www.endress.com/sfe500

DeviceCare SFE100
DeviceCare is an Endress+Hauser configuration tool for field devices using the following communication protocols: HART, PROFIBUS DP/PA, FOUNDATION Fieldbus, IO/Link, Modbus, CDI and Endress+Hauser Common Data Interfaces.

Technical Information TI01134S

www.endress.com/sfe100

Netilion
With the Netilion lIoT ecosystem, Endress+Hauser enables the optimization of plant performance, digitization of workflows, sharing of knowledge and improved collaboration. Drawing upon decades of experience in process automation, Endress+Hauser offers the process industry an IIoT ecosystem designed to effortlessly extract insights from data. These insights allow process optimization, leading to increased plant availability, efficiency, reliability and ultimately a more profitable plant.

www.netilion.endress.com

System components

Accessories	Description
Process display RIA15	The display unit records the analog measuring signal from the head transmitter and shows this on the display. The LC display shows the current measured value in digital form and as a bar graph indicating a limit value violation. The process display unit is integrated in the 4 to 20 mA or HART® loop and is powered directly from the current loop. Optionally up to four of a sensor's HART® process variables can be displayed. For details, see the "Technical Information" document TI01043K
RN42 active barrier, wide range power supply	1-channel wide range supply and active barrier for safe isolation of 4 to 20 mA standard signal circuits. For details, see "Technical Information", TI01584K
RMA42 Process transmitter with control unit	Universal transmitter, loop power supply, barrier and limit switch in one device. For details, see "Technical Information", TI00150R

Documentation

The following types of documentation are available on the product pages and in the Download Area of the Endress+Hauser website (www.endress.com/downloads) (depending on the selected device version):

Document	Purpose and content of the document
Technical Information (TI)	**Planning aid for your device** The document contains all the technical data on the device and provides an overview of the accessories and other products that can be ordered for the device.
Brief Operating Instructions (KA)	**Guide that takes you quickly to the 1st measured value** The Brief Operating Instructions contain all the essential information from incoming acceptance to initial commissioning.

Document	Purpose and content of the document
Operating Instructions (BA)	**Your reference document** These Operating Instructions contain all the information that is required in the various life cycle phases of the device: from product identification, incoming acceptance and storage, to mounting, connection, operation and commissioning, through to troubleshooting, maintenance and disposal.
Description of Device Parameters (GP)	**Reference for your parameters** The document provides a detailed explanation of each individual parameter. The description is aimed at those who work with the device over the entire life cycle and perform specific configurations.
Safety Instructions (XA)	Safety Instructions (XA) are supplied with the device, depending on the approval. These are an integral part of the Operating Instructions. The nameplate indicates which Safety Instructions (XA) apply to the device.
Supplementary device-dependent documentation (SD/FY)	Always comply strictly with the instructions in the relevant supplementary documentation. The supplementary documentation is an integral part of the device documentation.



www.addresses.endress.com

Endress+Hauser

People for Process Automation