TI00437P/00/EN/25.26-00
71778270
2026-06-18

Technical Information
Deltapilot M FMB50, FMB51, FMB52, FMB53

Hydrostatic level measurement
IO-Link, HART, PA, FF





Pressure transmitter with CONTITE™ measuring cell (condensate-resistant)

Application

The device is used for the following measuring tasks:
- Hydrostatic pressure measurement in liquids and paste-like media in all areas of process engineering, process measuring technology, pharmaceuticals and the food industry
- Level, volume or mass measurement in liquids

Your benefits

- Very good reproducibility and long-term stability
- Maximum plant safety provided by one-of-a-kind, condensate-resistant CONTITE measuring cell
- High reference accuracy: ±0.2 %
  optionally ±0.1 %
- Turn down up to 100:1
- Uniform platform for differential pressure, hydrostatics and pressure (Deltabar M – Deltapilot M – Cerabar M)
- Practical user navigation for quick and easy commissioning
- Used for process pressure monitoring up to SIL 2, certified to IEC 61508 Edition 2.0 and IEC 61511 by TÜV NORD
- Usage in drinking water: KTW, NSF

Endress+Hauser
People for Process Automation

Table of contents

About this document 4
Document function 4
Symbols 4
Documentation 4
List of abbreviations 5
Turn down calculation 5

Function and system design 6
Measuring principle 6
Level measurement in closed tanks with pressure overlay . . . 7
Density measurement 7
Level measurement with automatic density correction (with media changing in the tank) 8
Electrical differential pressure measurement with gauge pressure measuring cells 8
Communication protocol 9

Input 10
Measured variable 10
Measuring range 10

Output 11
Output signal 11
Signal range 4 to 20 mA 11
Signal on alarm 11
Load - 4 to 20 mA HART 11
Load for current output in the case of an IO-Link device . . . 12
Dead time, time constant 12
Dynamic behavior, current output (HART electronics) 12
Dynamic behavior, digital output (HART electronics) 12
Dynamic behavior, PROFIBUS PA 13
Dynamic behavior, FOUNDATION Fieldbus 13
IO-Link 14
Damping 14
Firmware version 14
Galvanic isolation 14
HART protocol-specific data 14
Wireless HART data 15
IO-Link protocol-specific data(only for FMB50) 15
Protocol-specific data PROFIBUS PA 16
FOUNDATION Fieldbus protocol-specific data 16

Power supply 19
Terminal assignment 19
Supply voltage 20
Current consumption 20
Electrical connection 20
Terminals 20
Cable entry 21
Connector 21
Cable specification 23
Start-up current 23
Residual ripple 23
Influence of power supply 23
Overvoltage protection (optional) 23

Performance characteristics of metallic process membrane 25
Reference operating conditions 25
Influence of the orientation 25
Calibration position 25
Resolution 25
Reference accuracy 25
Thermal change in the zero output and the output span . . . 26
Total performance 26
Long-term stability 26
Total error 26
Warm-up time 27

Installation 28
General installation instructions 28
FMB50 28
FMB51/FMB52/FMB53 28
Additional installation instructions 29
Wall and pipe mounting, transmitter (optional) 29
"Separate housing" version 30
Oxygen applications 31
PWIS cleaning 31
Applications with hydrogen 31
Special measuring cells for acids, alkalis or sea water (not FMB50) 31

Environment 32
Ambient temperature range 32
Ambient temperature limits 32
Storage temperature range 32
Climate class 32
Degree of protection 32
Vibration resistance 33
Electromagnetic compatibility 33

Process 34
Process temperature range 34
Lateral load FMB51 (static) 34
Pressure specifications 34

Mechanical construction 35
Device height 35
F31 housing, aluminum 35
F15 housing, stainless steel (hygienic) 36
Diameter of process membrane 36
Explanation of terms 36
Process connections FMB50, FMB51, FMB52 37
Process connections FMB50, FMB51, FMB52 38
Process connections FMB50 41
Process connections FMB51 (rod version) 45
Process connections FMB52 (cable version) 47
Dimensions of FMB53 with F31 housing, suspension clamp and mounting bracket 49
Dimensions of FMB53 with F15 housing, suspension clamp and mounting bracket 50
Wall and pipe mounting with mounting bracket 51
FMB50: Reduction in installation height 52
FMB51, FMB52: Reduction in installation height 52

Example for a "Separate housing version" 53
Materials not in contact with process 54
Materials in contact with process 57

Operability 60
Operating concept 60
Local operation 60
Operating languages 63
Remote operation 63
System integration 65

Certificates and approvals 67
CE mark 67
RoHS 67
RCM marking 67
Ex approvals 67
EAC conformity 67
Suitable for hygiene applications 67
Certificate of current Good Manufacturing Practices (cGMP) 67
Certificate of Compliance ASME BPE 2012 (only FMB50) . . 67
Functional safety SIL 67
CRN approval 68
AD2000 68
Pressure Equipment Directive 2014/68/EU (PED) 68
Classification of process sealing between electrical systems and (flammable or combustible) process fluids in accordance with ANSI/ ISA 12.27.01 68
Inspection certificate 68

Ordering information 70
Special device versions 70
Scope of delivery 70
Measuring point (TAG) 70
Configuration data sheet 70

Supplementary documentation 73
Standard documentation 73
Supplementary device-dependent documentation 73
Field of Activities 73
Safety instructions 73
Special Documentation 73

Accessories 74
Weld-in adapter, Process adapter and Flanges 74
Mounting bracket for wall and pipe mounting 74
Suspension clamp (FMB53 only) 74
Extension cable shortening kit (FMB53 only) 74
M12 connector 74
Adapter Uni for FMB50 74
Service-specific accessories 75

Registered trademarks 75

About this document

Document function

This document provides all technical data for the device and gives an overview of the accessories and additional items that can be ordered for it.

Symbols

Safety symbols

Symbol	Meaning
DANGER	**DANGER!** This symbol alerts you to a dangerous situation. Failure to avoid this situation will result in seriousor fatal injury.
WARNING	**WARNING!** This symbol alerts you to a dangerous situation. Failure to avoid this situation can result in seriousor fatal injury.
CAUTION	**CAUTION!** This symbol alerts you to a dangerous situation. Failure to avoid this situation can result in minoror medium injury.
NOTICE	**NOTICE!** This symbol contains information on procedures and other facts which do not result in personalinjury.

Electrical symbols

Symbol	Meaning	Symbol	Meaning
	**Protective ground connection** A terminal which must be connected to ground prior to establishing any other connections.		**Ground connection** A grounded terminal which, as far as the operator is concerned, is grounded via a grounding system.

Symbols for certain types of information

Symbol	Meaning
	**Permitted** Procedures, processes or actions that are permitted.
	**Forbidden** Procedures, processes or actions that are forbidden.
	**Tip** Indicates additional information.
	Visual inspection

Symbols in graphics

Symbol	Meaning
1, 2, 3 ...	Item numbers
1. , 2. , 3. ...	Series of steps
A, B, C, ...	Views
A-A, B-B, C-C, ...	Sections

Documentation

See chapter "Additional documentation" → 73

The document types listed are available:
In the Download Area of the Endress+Hauser Internet site: www.endress.com → Download

List of abbreviations

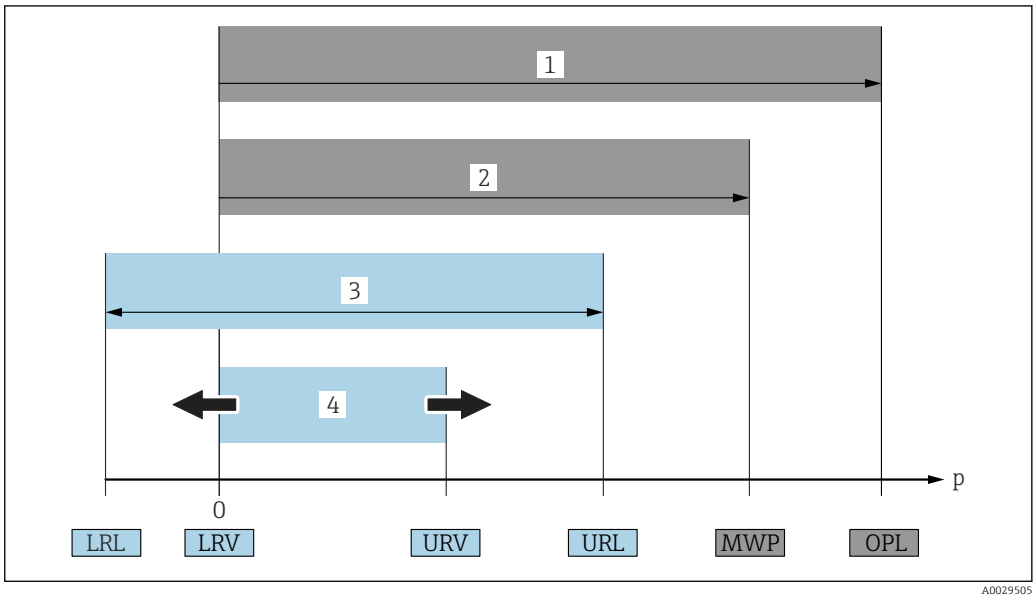

1 *OPL: The OPL (over pressure limit = measuring cell overpressure limit) for the device depends on the lowest-rated element, with regard to pressure, of the selected components, i.e. the process connection must be taken into consideration in addition to the measuring cell. Pay attention to the pressure/temperature dependency. OPL (Over Pressure Limit) is a test pressure.*

2 *MWP: The MWP (maximum working pressure) for the measuring cells depends on the lowest-rated element, with regard to pressure, of the selected components, i.e. the process connection also has to be taken into consideration besides the measuring cell. Pay attention to the pressure/temperature dependency. The maximum working pressure may be applied to the device for an unlimited period of time. The maximum working pressure can be found on the nameplate.*

3 *The maximum measuring range corresponds to the span between the lower range limit and upper range limit. This measuring range is equivalent to the maximum measuring span that can be calibrated/adjusted.*

4 *The calibrated/adjusted measuring span corresponds to the span between the lower range limit and upper range limit. Factory setting: 0 to upper range limit. Other calibrated spans can be ordered as customized measuring spans.*

p Pressure
LRL Lower range limit
URL Upper range limit
LRV Lower range value
URV Upper range value
TD Turn down. Example - see the following section.

Turn down calculation

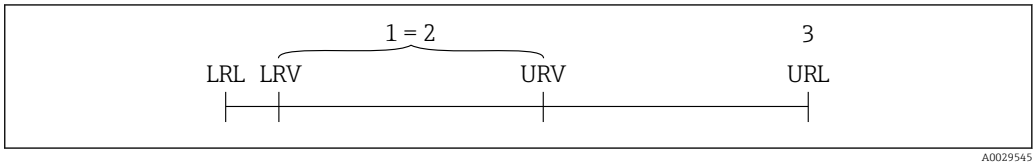

1 *Calibrated/adjusted measuring span*
2 *Zero point-based span*
3 *Upper range limit*

Example:
- Measuring cell: 10 bar (150 psi)
- Upper range limit (URL) = 10 bar (150 psi)
- Calibrated/adjusted measuring span: 0 to 5 bar (0 to 75 psi)
- Lower range value (LRV) = 0 bar (0 psi)
- Upper range value (URV) = 5 bar (75 psi)

$$TD = \frac{URL}{|URV - LRV|}$$

In this example, the TD is 2:1. This span is based on the zero point.

Function and system design

Measuring principle

Hydrostatic level measurement

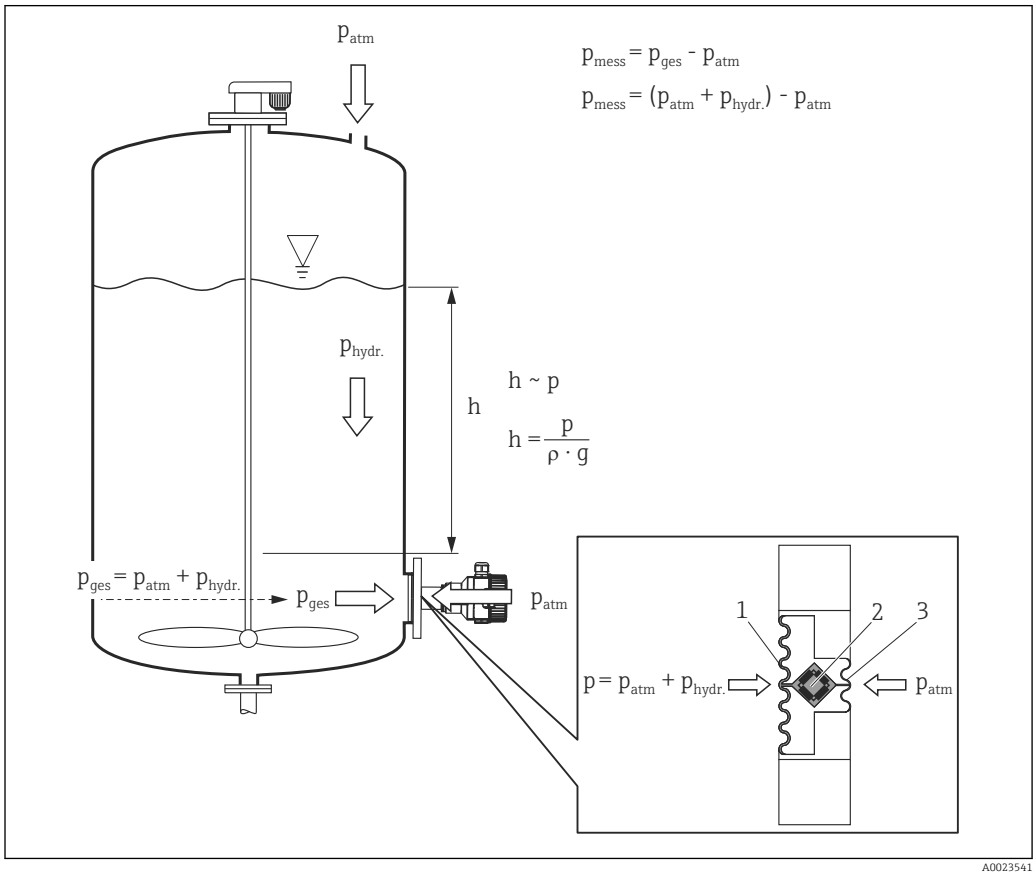

1 Process membrane
2 Measuring element
3 Rear membrane of the CONTITE™ measuring cell
g Acceleration due to gravity
h Level height
P_{tot} *Total pressure = hydrostatic pressure + atmospheric pressure*
P_{atm} *Atmospheric pressure*
$P_{hydr.}$ *Hydrostatic pressure*
P_{meas} *Measured pressure in the measuring cell = hydrostatic pressure*
ρ Density of the medium

Due to its weight, a liquid column creates hydrostatic pressure. If the density is constant, the hydrostatic pressure depends solely on the height h of the liquid column.

The CONTITE™ measuring cell, which works according to the principle of the gauge pressure measuring cell, constitutes the core of the Deltapilot M. In contrast to conventional gauge pressure measuring cells, the precision measuring element (2) in the CONTITE™ measuring cell is absolutely protected, situated between the process membrane (1) and the rear membrane (3). Thanks to this hermetic sealing of the measuring element, the CONTITE™ measuring cell is absolutely insensitive to condensate/condensation and aggressive gases. The pressure applied is transferred from the process membrane to the measuring element by means of an oil without any loss in pressure.

Any measurement errors due to fluctuations in temperature are compensated for in the electronics unit by means of the measuring cell temperature.

A linearization function with max. 32 points, which is based on a table entered manually or semi-automatically, can be activated on site or via remote operation. This function facilitates measurement in engineering units, and provides a linear output signal for spherical and horizontal cylindrical vessels, and vessels with a conical outlet.

Level measurement in closed tanks with pressure overlay

You can determine the differential pressure in tanks with pressure overlay using two Deltapilot M. The pressure measured values of the two probes are sent to a signal processing unit such as Endress +Hauser RMA or a PLC. The signal processing unit or PLC determines the difference in pressure and uses this to calculate the level and the density where necessary.

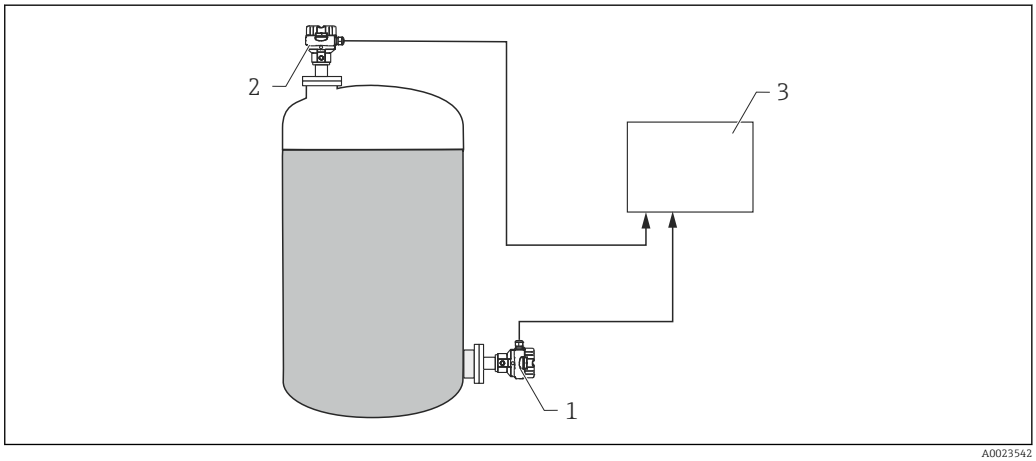

1 Deltapilot 1 measures the total pressure (hydrostatic pressure and top pressure)
2 Deltapilot 2 measures the top pressure
3 Signal processing unit determines the difference in pressure and uses this to calculate the level

NOTICE

Measured errors can occur.
Large measured errors can occur if the ratio of the level to the top pressure is >1:6. This does not affect reproducibility.

- ▶ When selecting the measuring cell, make sure you select measuring ranges that are sufficiently wide (see example).

Example:
- Max. hydrostatic pressure = 600 mbar (9 psi)
- Max. top pressure (Deltapilot 2):
  300 mbar (4.5 psi)
- Max. total pressure, measured with Deltapilot 1:
  300 mbar (4.5 psi) + 600 mbar (9 psi) = 900 mbar (13.5 psi) measuring cell to be selected:
  0 to 1 200 mbar (0 to 18 psi)
- Max. pressure, measured with Deltapilot 2:
  300 mbar (4.5 psi) → measuring cell to be selected: 0 to 400 mbar (0 to 6 psi)

NOTICE

Possibility of probe 2 flooding during differential pressure measurement.
Measured errors can occur.

- ▶ When installing, make sure that probe 2 cannot be flooded.

Density measurement

You can measure the density in tanks with pressure overlay using two Deltapilot M and a signal processing unit or a PLC. The signal processing unit or the PLC calculates the density from the known distance between the two Deltapilot M devices Δh and the two measured values p_1 and p_2.

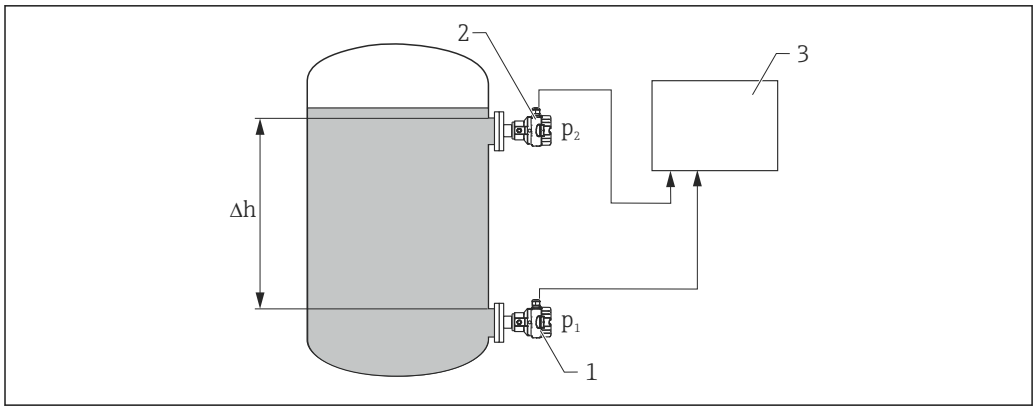

1 *Deltapilot 1 determines pressure measured value p_1*
2 *Deltapilot 2 determines pressure measured value p_2*
3 *Signal processing unit determines the density from the two measured values p_1 and p_2 and the distance Δh*

Level measurement with automatic density correction (with media changing in the tank)

Level measurement with automatic density correction is possible in conjunction with a limit switch such as Liquiphant and a PLC. The limit switch always switches at the same level. In the switch point, the signal processing unit determines the corrected density from the pressure of the Deltapilot M currently measured and the known distance between Deltapilot M and the limit switch. The signal processing unit then calculates the level from the new density and the measured pressure of the Deltapilot M.

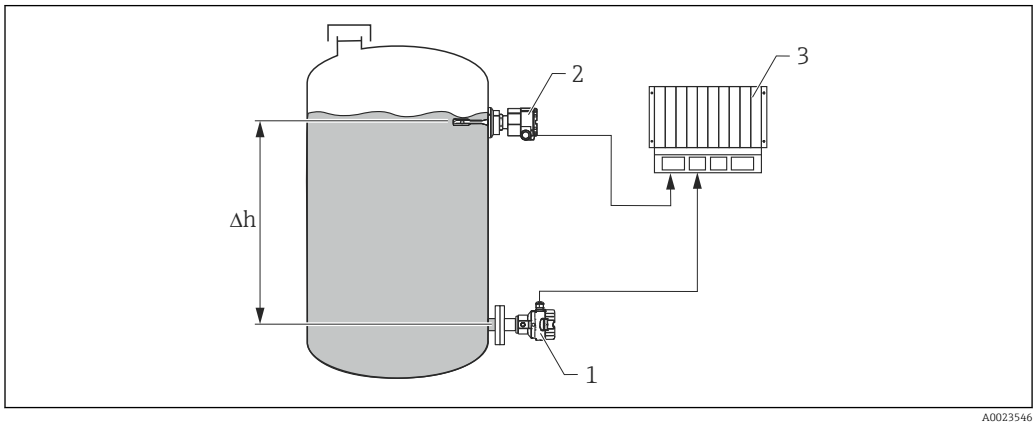

1 *Deltapilot M*
2 *Liquiphant*
3 *PLC*

Electrical differential pressure measurement with gauge pressure measuring cells

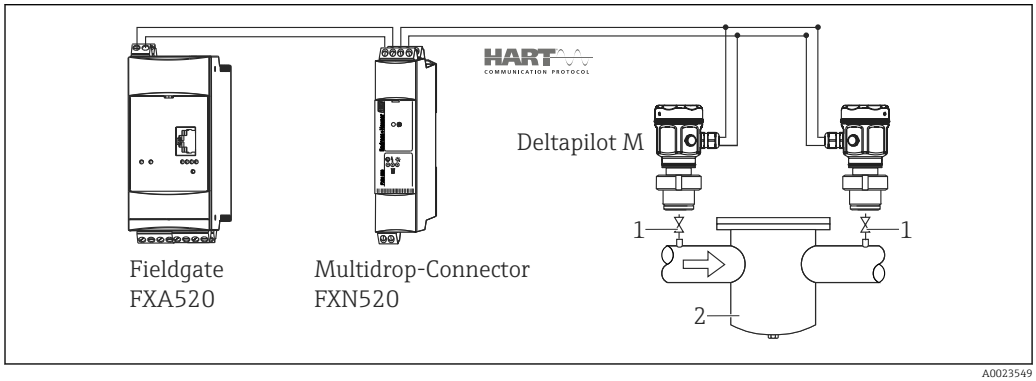

1 *Shutoff valves*
2 *e.g. filter*

In the example given, two Deltapilot M devices (each with a gauge pressure measuring cell) are interconnected. The differential pressure can thus be measured using two independent Deltapilot M devices.

⚠ WARNING

Explosion Hazard!

- ▶ If using intrinsically safe devices, strict compliance with the rules for interconnecting intrinsically safe circuits as stipulated in IEC60079-14 (proof of intrinsic safety) is mandatory.

Communication protocol

- 4 to 20 mA with HART communication protocol
- 4 to 20 mA with IO-Link communication protocol (only for FMB50)
- PROFIBUS PA
  - The Endress+Hauser devices meet the requirements of the FISCO model.
  - Due to a low current consumption of 11 mA ± 1 mA, the following number of devices can be operated on one bus segment if installing as per FISCO: up to 8 devices for Ex ia, CSA IS and FM IS applications or up to 31 devices for all other applications e.g. in non-hazardous areas, Ex nA etc. Further information on PROFIBUS PA can be found in Operating Instructions BA00034S "PROFIBUS DP/PA: Guidelines for planning and commissioning" and in the PNO Guideline.
- FOUNDATION Fieldbus
  - The Endress+Hauser devices meet the requirements of the FISCO model.
  - Due to a low current consumption of 16 mA ± 1 mA, the following number of devices can be operated on one bus segment if installing as per FISCO: up to 6 devices for Ex ia, CSA IS and FM IS applications or up to 22 devices for all other applications e.g. in non-hazardous areas, Ex nA etc. Further information on FOUNDATION Fieldbus, such as requirements for bus system components, can be found in Operating Instructions BA00013S "FOUNDATION Fieldbus Overview".

Input

Measured variable

Measured process variables

Hydrostatic pressure

Measuring range

Measuring cell	Maximum measuring range		Smallest calibratable span (preset at factory) [1]	MWP	OPL	Vacuum resistance [2]	Option [3]
	lower (LRL) [4]	Upper (URL)				Synthetic oil/ Inert oil	
[bar (psi)]	[bar (psi)]	[bar (psi)]	[bar (psi)]	[bar (psi)]	[bar (psi)]	[bar_{abs} (psi_{abs})]	
0.1 (1.5)	−0.1 (-1.5)	+0.1 (+1.5)	0.01 (0.15)	2.7 (40.5)	4 (60)	0.01/0.04 (0.145/0.6)	1C
0.4 (6)	−0.4 (-6)	+0.4 (+6)	0.02 (0.3)	5.3 (79.5)	8 (120)		1F
1.2 (18)	−1 (-15)	+1.2 (+18)	0.06 (1)	16 (240)	24 (360)		1H
4 (60)	−1 (-15)	+4 (+60)	0.2 (3)	16 (240)	24 (360)		1M
10 (150)	−1 (-15)	+10 (+150)	0.5 (7.5)	27 (405)	40 (600)		1P

1) Largest factory-configurable turn down: 20:1, higher available on request.
2) The vacuum resistance applies to the measuring cell at reference operating conditions.
3) Product Configurator, order code for "Sensor range"
4) By default, the device is set to a lower range limit of 0 bar. Please specify in the order if the lower range limit is to be set to a different default value.

Output

Output signal

- 4 to 20 mA with superimposed digital communication protocol HART 6.0, 2-wire
- Digital communication IO-Link, 3-wire (only for FMB50)
- Digital communication signal PROFIBUS PA (Profile 3.02)
- Digital communication signal FOUNDATION Fieldbus

Output	Option [1]
4 to 20mA HART	2
4 to 20mA, IO-Link (only for FMB50)	7
PROFIBUS PA	3
FOUNDATION Fieldbus	4

1) Product Configurator, order code for "Output"

Signal range 4 to 20 mA

4 to 20 mA HART and IO-Link: 3.8 to 20.5 mA

Signal on alarm

As per NAMUR NE 43

- 4 to 20 mA HART:
  Options:
  - Max. alarm: can be set from 21 to 23 mA (factory setting: 22 mA)
  - Hold measured value: last measured value is held
  - Min. alarm: 3.6 mA
- IO-Link:
  - Max. alarm: permanently set to 22 mA
  - Min. alarm: 3.6 mA
  - Hold measured value: last measured value is held
- PROFIBUS PA: can be set in the Analog Input block
  Options: Last Valid Out Value (factory setting), Fail-safe Value, Status Bad
- FOUNDATION Fieldbus: can be set in the Analog Input block
  Options: Last Good Value, Fail-safe Value (factory setting), Wrong Value

Load - 4 to 20 mA HART

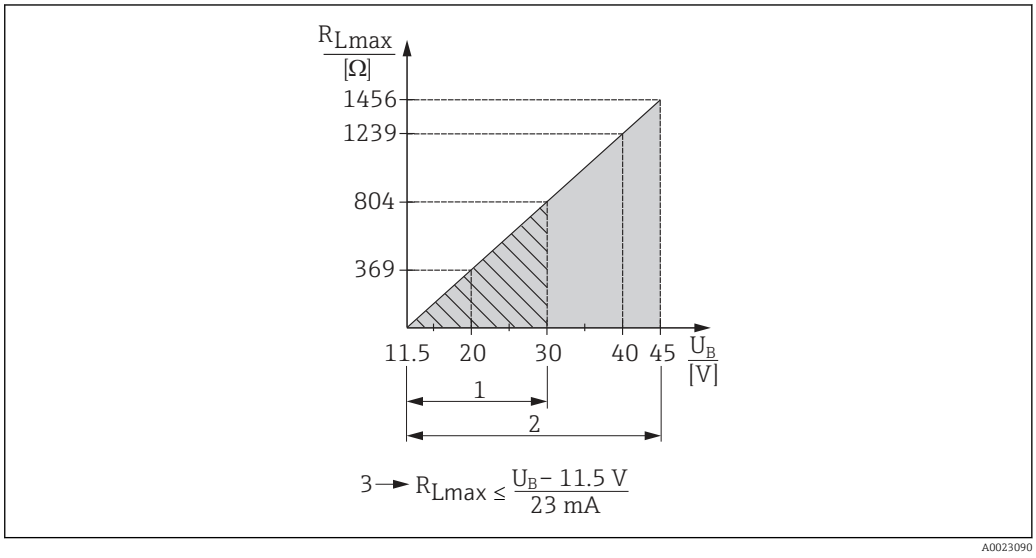

A0023090

1 Supply voltage 11.5 to 30 V DC for intrinsically safe device versions (not for analog)
2 Supply voltage 11.5 to 45 V DC (versions with plug-in connector 35 V DC) for other types of protection and for uncertified device versions
3 R_{Lmax} maximum load resistance
U_B Supply voltage

When operating via a handheld terminal or via a PC with an operating program, a minimum communication resistance of 250 Ω must be taken into account.

Load for current output in the case of an IO-Link device

In order to guarantee sufficient terminal voltage, a maximum load resistance R_L (including line resistance) must not be exceeded depending on the supply voltage U_B of the supply unit.

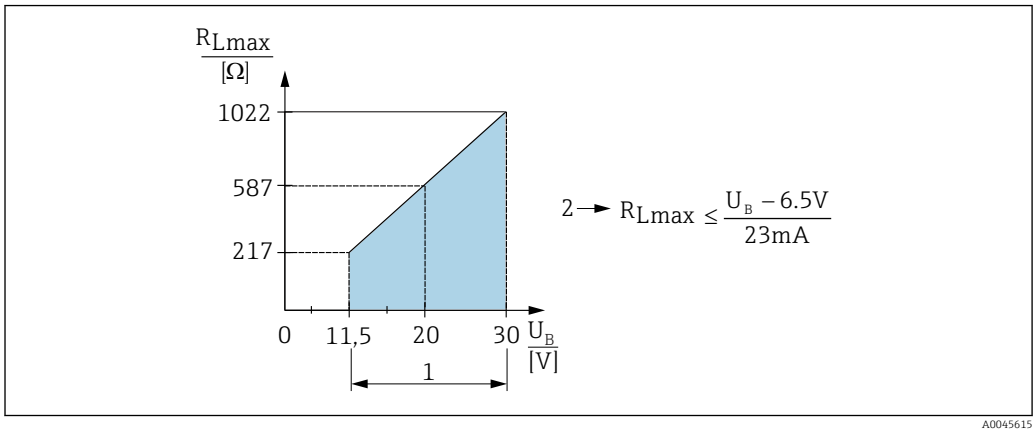

1 Power supply 11.5 to 30 V_{DC}
2 R_{Lmax} maximum load resistance
U_B Supply voltage

If the load is too high, the device performs the following points:
- Output of failure current and display of "M803" (Output: MIN alarm current)
- Periodic checking to establish if it is possible to quit fault state

Dead time, time constant

Presentation of the dead time and the time constant:

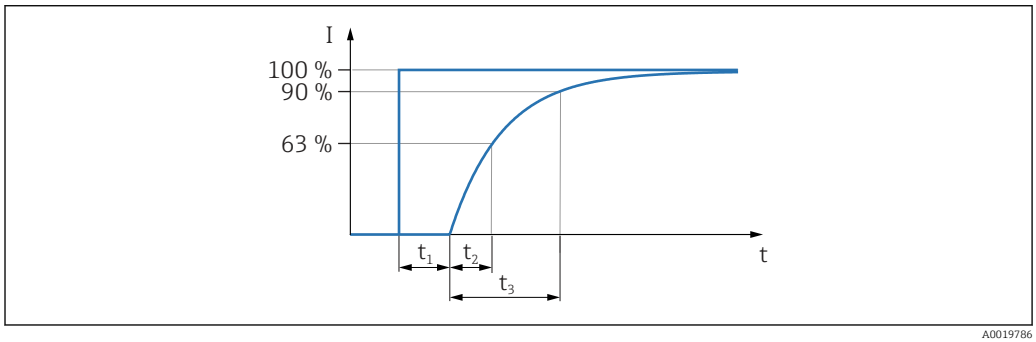

Dynamic behavior, current output (HART electronics)

	Device	Dead time (t_1) [ms]	Time constant T63 (= t_2) [ms]	Time constant T90 (= t_3) [ms]
Max.	FMB50	60	90	210
Max.	FMB51 FMB52 FMB53	500	250	-

Dynamic behavior, digital output (HART electronics)

	Device	Dead time (t_1) [ms]	Dead time (t_1) [ms] + Time constant T63 (= t_2) [ms]	Dead time (t_1) [ms] + Time constant T90 (= t_3) [ms]
Min.	FMB50	220	310	370
Max.		1020	1110	1170
Min.	FMB51 FMB52 FMB53	660	910	-
Max.		1460	1710	-

Reading cycle

- Acyclic: max. 3/s, typically 1/s (depending on command # and number of preambles)
- Cyclic (burst): max. 3/s, typically 2/s

The device offers the BURST MODE function for cyclic value transmission via the HART communication protocol.

Cycle time (update time)

Cyclic (burst): min. 300 ms

Response time

When recording step responses, it is important to bear in mind that the response times of the measuring cell might be added to the specified times.

- Acyclic: min. 330 ms, typically 590 ms (depending on command # and number of preambles)
- Cyclic (burst): min. 160 ms, typically 350 ms (depending on command # and number of preambles)

Dynamic behavior, PROFIBUS PA

	Device	Dead time (t_1) [ms]	Dead time (t_1) [ms] + Time constant T63 (= t_2) [ms]	Dead time (t_1) [ms] + Time constant T90 (= t_3) [ms]
Min.	FMB50	95	185	245
Max.		1195	1285	1345
Min.	FMB51 FMB52 FMB53	535	785	-
Max.		1635	1885	-

Reading cycle (SPS)

- Acyclic: typically 25/s
- Cyclic: typically 30/s (dependent on the number and type of function blocks used in a closed-control loop)

Cycle time (update time)

Min. 100 ms

The cycle time in a bus segment in cyclic data communication depends on the number of devices, on the segment coupler used and on the internal PLC cycle time.

Response time

- Acyclic: approx. 23 ms to 35 ms (depending on Min. Slave Interval)
- Cyclic: approx. 8 ms to 13 ms (depending on Min. Slave Interval)

Dynamic behavior, FOUNDATION Fieldbus

	Device	Dead time (t_1) [ms]	Dead time (t_1) [ms] + Time constant T63 (= t_2) [ms]	Dead time (t_1) [ms] + Time constant T90 (= t_3) [ms]
Min.	FMB50	105	195	255
Max.		1105	1195	1255
Min.	FMB51 FMB52 FMB53	545	795	-
Max.		1545	1795	-

Reading cycle

- Acyclic: typically 5/s
- Cyclic: max. 10/s (dependent on the number and type of function blocks used in a closed-control loop)

Cycle time (update time)

Cyclic: min. 100 ms

Response time

- Acyclic: typically 70 ms (for standard bus parameter settings)
- Cyclic: max. 20 ms (for standard bus parameter settings)

IO-Link

	Dead time (t_1) [ms]	Time constant (T63), t_2 [ms]	Time constant (T90), t_3 [ms]
Min.	60 ms + cycle time	90 ms + cycle time	210 ms + cycle time

Reading cycle

- Acyclic: cyclic/n where n is dependent on the size of the acyclic data
- Cyclic: min. 100/s

Cycle time (update time)

Cyclic: min. 10 ms

Response time

Cyclic: <10 ms at 38.4 kbps

When recording step responses, it is important to bear in mind that the response times of the measuring cell might be added to the specified times.

Damping

A damping affects all outputs (output signal, display):
- Via local display (not analog), handheld terminal or PC with operating program continuously from 0 to 999 s
- Via the DIP switch on the electronic insert (not IO-Link), "on" (= set value) and "off" (= damping switched off)
- Factory setting: 2 s

Firmware version

Designation	Option [1]
01.00.zz, FF, DevRev01	76
01.00.zz, PROFIBUS PA, DevRev01	77
01.00.zz, HART, DevRev01	78

1) Product Configurator, "Firmware version" ordering feature

Galvanic isolation

The following devices have a galvanic isolation between electronic and probe:
- FMB51, FMB52, FMB53
- FMB50 with separate housing

HART protocol-specific data

Manufacturer ID	17 (11 hex)
Device type ID	35 (23 hex)
Device revision	01 (01 hex) - SW version 01.00.zz
HART specification	6
DD revision	▪ 01 (Dutch)) ▪ 02 (Russian))
Device description files (DTM, DD)	Information and files under: ▪ www.endress.com ▪ www.fieldcommgroup.org/registered-products
HART load	Min. 250 Ω

HART device variables	The following measured values are assigned to the device variables: **Measured values for PV (primary variable)** ▪ Pressure ▪ Level ▪ Tank content **Measured values for SV, TV (second and third variable)** ▪ Pressure ▪ Level **Measured values for QV (fourth device variable)** Temperature
Supported functions	▪ Burst mode ▪ Additional transmitter status ▪ Device locking ▪ Alternative modes of operation

Wireless HART data

Minimum starting voltage	11.5 V [1]
Start-up current	12 mA (default) or 22 mA (customer setting)
Starting time	5 s or 7 s for rod/cable version
Minimum operating voltage	11.5 V [1]
Multidrop current	4 mA
Time for connection setup	1 s

1) Or higher if operating near ambient temperature limits (−40 to +85 °C (−40 to +185))

IO-Link protocol-specific data(only for FMB50)

IO-Link is a point-to-point connection for communication between the device and an IO-Link master. The IO-Link communication interface enables direct access to the process and diagnostic data. It also provides the option of configuring the device while in operation.

The device supports the following features:

IO-Link specification	Version 1.1
IO-Link Smart Sensor Profile 2nd Edition	Supported: ▪ Identification ▪ Diagnosis ▪ Digital Measuring Sensor (as per SSP 4.3.3)
IO-Link transfer rate	COM2; 38.4 kBaud
Minimum cycle time	10 ms
Process data width	14 bytes process data 2 bytes diagnostic data
IO-Link data storage	Yes
Block configuration according to V1.1	Yes
Device operational	5 s after the supply voltage is applied, the device is operational (first valid measured value after 2 s)

Device description

In order to integrate field devices into a digital communication system, the IO-Link system requires a description of the device parameters such as output data, input data, data format, quantity of data and supported IO-Link transfer rate.

These data are contained in the device description (IODD [1]) which is made available to the IO-Link master via generic modules during commissioning of the communication system.

The IODD can be downloaded as follows:
- Endress+Hauser: www.endress.com
- IODDfinder: https://ioddfinder.io-link.com/#/

Protocol-specific data PROFIBUS PA

Manufacturer ID	17 (11 hex)
Ident number	1554 hex
Profile Version	3.02 SW Version 01.00.zz
GSD Revision	5
DD Revision	1
GSD File DD Files	Information and files can be found: ▪ www.endress.com ▪ www.profibus.org
Output values	**Measured values for PV (via Analog Input Function Block)** ▪ Pressure ▪ Level ▪ Tank content **Measured values for SV** ▪ Pressure ▪ Temperature
Input values	Input value sent from PLC, can be shown on display
Supported functions	▪ Identification & Maintenance Simple device identification via control system and nameplate ▪ Condensed status ▪ Automatic ident number adaptation and switchable to following ident numbers: ▪ 9700: Profile-specific transmitter identification number with the "Classic" or "Condensed" status. ▪ 1503: 1503: Compatibility mode for the old Deltapilot M (DB50, DB50L, DB51, DB52, DB53). ▪ 1555: Identification number for the new Deltapilot M (FMB50, FMB51, FMB52, FMB53). ▪ Device locking: The device can be locked by hardware or software.

FOUNDATION Fieldbus protocol-specific data

Device type	0x1023
Device revision	01 (hex)
DD revision	0x01021
Device description files (DTM, DD)	Information and files under: ▪ www.endress.com ▪ www.fieldcommgroup.org/registered-products
CFF revision	0x000102
ITK version	5.2.0
ITK certification driver no.	IT067500
Link Master functionality supported (LAS)	Yes
Link Master/Basic Device selectable	Yes; Factory setting: Basic Device
Number of VCRs	44
Number of link objects in VFD	50
Number of FB schedule objects	40

1) IO Device Description

Virtual communication references (VCRs)

Permanent entries	44
Client VCRs	0
Server VCRs	5
Source VCRs	8
Sink VCRs	0
Subscriber VCRs	12
Publisher VCRs	19

Link settings

Slot time	4
Min. inter PDU delay	12
Max. response delay	40

Transducer Blocks

Block	Content	Output values
TRD1 Block	Contains all parameters related to the measurement	▪ Pressure or level (channel 1) ▪ Process temperature (channel 2) ▪ Measured pressure value (channel 3) ▪ Max. pressure (channel 4) ▪ Level before linearization (channel 5)
Diagnostic Block	Contains diagnostic information	Error code via DI channels (channel 10 to 15)
Display Block	Contains parameters to configure the onsite display	No output values

Function blocks

Block	Content	Number of blocks	Execution time	Functionality
Resource Block	The Resource Block contains all the data that uniquely identify the device. It is an electronic version of a nameplate of the device.	1		Enhanced
Analog Input Block 1 Analog Input Block 2	The AI Block receives the measuring data from the Sensor Block, (selectable via a channel number) and makes the data available to other function blocks at its output. Enhancement: digital outputs for process alarms, fail safe mode.	2	25 ms	Enhanced
Digital Input Block	This block contains the discrete data of the Diagnostic Block (selectable via a channel number 10 to 15) and provides them for other blocks at the output.	1	20 ms	Standard
Digital Output Block	This block converts the discrete input and thus initiates an action (selectable via a channel number) in the DP Flow Block or in the TRD1 Block. Channel 20 resets the counter for max. pressure transgressions value.	1	20 ms	Standard
PID Block	The PID Block serves as a proportional-integral-derivative controller and is used almost universally for closed-loop-control in the field including cascade and feedforward. Input IN can be indicated on the display. The selection is performed in the Display Block (DISPLAY_MAIN_LINE_CONTENT).	1	40 ms	Standard
Arithmetic Block	This block is designed to permit simple use of popular measurement math functions. The user does not have to know how to write equations. The math algorithm is selected by name, chosen by the user for the function to be performed.	1	35 ms	Standard

Block	Content	Number of blocks	Execution time	Functionality
Input Selector Block	The Input Selector Block facilitates the selection of up to four inputs and generates an output based on the configured action. This block normally receives its inputs from AI Blocks. The block performs maximum, minimum, average and 'first good' signal selection. Inputs IN1 to IN4 can be indicated on the display. The selection is performed in the Display Block (DISPLAY_MAIN_LINE_1_CONTENT).	1	30 ms	Standard
Signal Characterizer Block	The Signal Characterizer Block has two sections, each with an output that is a non-linear function of the respective input. The non-linear function is generated by a single look-up table with 21 arbitrary x-y pairs.	1	40 ms	Standard
Integrator Block	The Integrator Block integrates a variable as a function of the time or accumulates the counts from a Pulse Input Block. The block may be used as a totalizer that counts up until reset or as a batch totalizer that has a setpoint, where the integrated value or accumulated value is compared to pre-trip and trip settings, generating a binary signal when the setpoint is reached.	1	35 ms	Standard

Additional function block information:

Instantiate function blocks	Yes
Number of additional instantiate function blocks	20

Power supply

⚠ WARNING

Limitation of electrical safety due to incorrect connection!

- When using the measuring device in hazardous areas, installation must comply with the corresponding national standards and regulations and the Safety Instructions or Installation or Control Drawings .
- All explosion protection data are given in separate Ex documentation, which is available upon request. The Ex documentation is supplied as standard with all Ex devices .
- In accordance with IEC/EN61010 a suitable circuit breaker must be provided for the device.
- HART: Overvoltage protection HAW569-DA2B for the non-hazardous area, ATEX II 2 (1) Ex ia IIC and IEC Ex ia can be ordered as an option (see "Ordering information" section).
- Protective circuits against reverse polarity, HF influences and overvoltage peaks are integrated.

Terminal assignment

HART, PROFIBUS PA, FOUNDATION Fieldbus

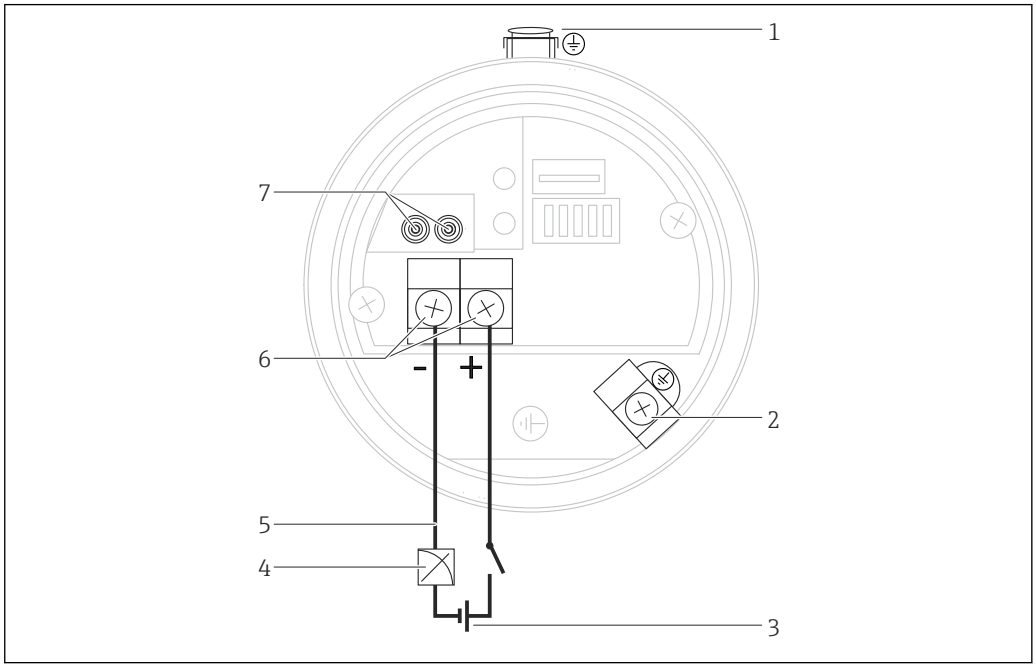

A0023505

1 *External ground terminal (only for devices with certain approvals or if "Measuring point" (TAG) is ordered)*
2 *Internal ground terminal*
3 *Supply voltage → 20*
4 *4 to 20 mA for HART devices*
5 *For HART and FOUNDATION Fieldbus devices: With a handheld terminal, all the parameters can be configured anywhere along the bus line via menu operation.*
6 *Terminals*
7 *For HART devices: test terminals, see section "Taking 4 to 20 mA test signal" → 20*

IO-Link

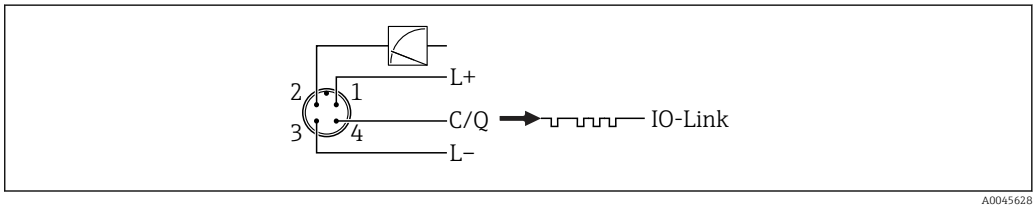

A0045628

1 *Supply voltage +*
2 *4-20 mA*
3 *Supply voltage -*
4 *C/Q (IO-Link communication)*

Supply voltage

4 to 20 mA HART

Explosion protection	Supply voltage
Intrinsically safe	11.5 to 30 V DC
▪ Other types of protection ▪ Devices without a certificate	11.5 to 45 V DC (versions with 35 V DC plug-in connection)

Measuring a 4 to 20 mA test signal

A 4 to 20 mA test signal may be measured via the test terminals without interrupting the measurement.

IO-Link

- 11.5 to 30 V DC if only the analog output is used
- 18 to 30 V DC if IO-Link is used

PROFIBUS PA

Version for non-hazardous areas: 9 to 32 V DC

FOUNDATION Fieldbus

Version for non-hazardous areas: 9 to 32 V DC

Current consumption

- IO-Link < 60 mA
- PROFIBUS PA: 11 mA ±1 mA, switch-on current corresponds to IEC 61158-2, Clause 21
- FOUNDATION Fieldbus: 16 mA ±1 mA, switch-on current corresponds to IEC 61158-2, Clause 21

Electrical connection

Cable entry	Degree of protection	Option [1]
M20 gland	IP66/68 NEMA 4X/6P	A
G ½" thread	IP66/68 NEMA 4X/6P	C
NPT ½" thread	IP66/68 NEMA 4X/6P	D
M12 plug	IP66/67 NEMA 4X/6P	I
7/8" plug	IP66/68 NEMA 4X/6P	M
HAN7D plug 90 deg.	IP65	P
PE cable 5m (Only for FMB50)	IP66/68 NEMA4X/6P + pressure compensation via cable	S
M16 valve connector	IP64	V

1) Product Configurator, "Electrical connection" ordering feature

PROFIBUS PA

The digital communication signal is transmitted to the bus via a twin-core connecting cable. The bus line also provides the power supply. For further information on the network structure and grounding, and for further bus system components such as bus cables, see the relevant documentation, e.g., Operating Instructions BA00034S "PROFIBUS DP/PA: Guidelines for planning and commissioning" and the PNO Guideline.

FOUNDATION Fieldbus

The digital communication signal is transmitted to the bus via a twin-core connecting cable. The bus line also provides the power supply. For further information on the network structure and grounding and for further bus system components such as bus cables, see the relevant documentation, e.g., Operating Instructions BA00013S "FOUNDATION Fieldbus Overview" and the FOUNDATION Fieldbus Guideline.

Terminals

- Supply voltage and internal ground terminal: 0.5 to 2.5 mm^2 (20 to 14 AWG)
- External ground terminal: 0.5 to 4 mm^2 (20 to 12 AWG)

Cable entry

Approval	Type	Clamping area
Standard, CSA GP FM/ CSA IS	Plastic M20x1.5	5 to 10 mm (0.2 to 0.39 in)
ATEX II1/2D Ex t, II1/2GD Ex ia, II3G Ex nA, IEC Ex t Da/Db	Metal M20x1.5 (Ex e)	7 to 10.5 mm (0.28 to 0.41 in)

For other technical data, see the housing section → 35

Connector

Devices with valve connector (HART)

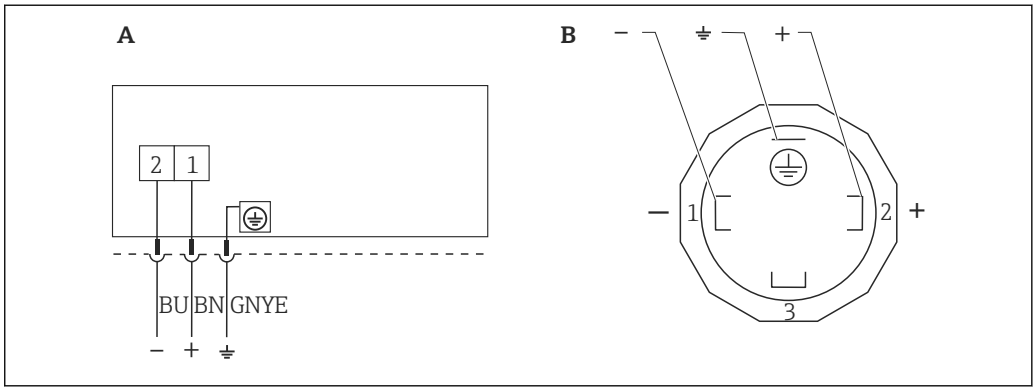

A0023097

1 *BN = brown, BU = blue, GNYE = green*

A Electrical connection for devices with valve connector
B View of the plug connector at the device

Material: PA 6.6

Connecting devices with Harting plug Han7D (HART)

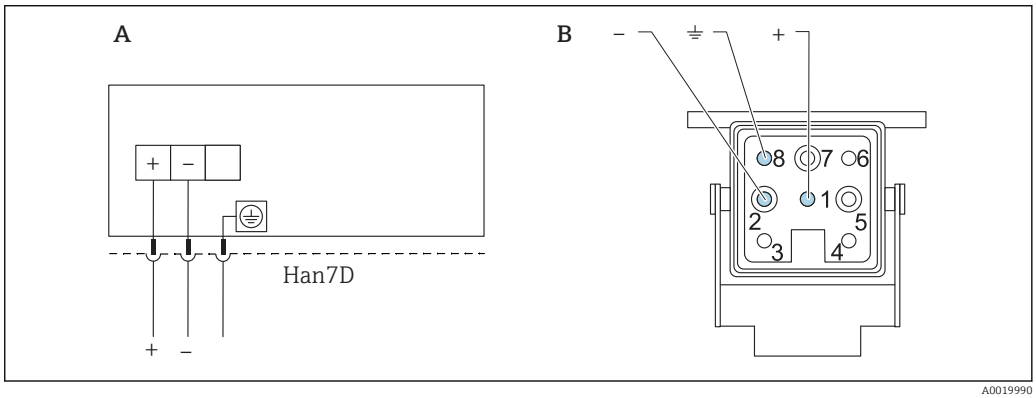

A0019990

A Electrical connection for devices with Harting plug Han7D
B View of the connection on the device
- Brown
⏚ Green/yellow
+ Blue

Material: CuZn, gold-plated contacts of plug-in jack and plug

Connecting the cable version (FMB50 only)

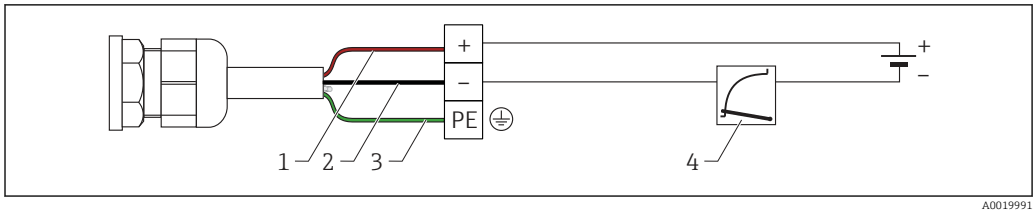

A0019991

1 *RD = red*
2 *BK = black*
3 *GNYE = green*
4 *4 to 20 mA*

Connecting devices with M12 plug (HART, PROFIBUS PA)

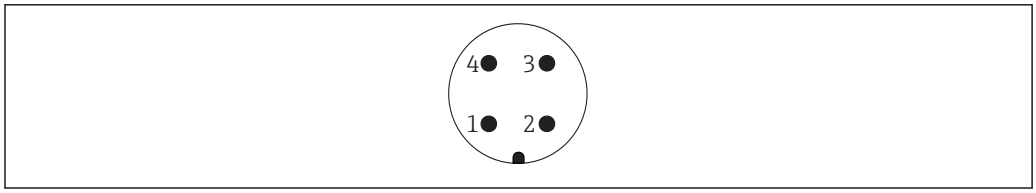

A0011175

1 *Signal +*
2 *Not assigned*
3 *Signal –*
4 *Earth*

Endress+Hauser offers the following accessories for devices with an M12 plug:

Plug-in jack M 12x1, straight
- Material: body PA; coupling nut CuZn, nickel-plated
- Degree of protection (fully locked): IP66/67
- Order number: 52006263

Plug-in jack M 12x1, elbowed
- Material: body PBT/PA; coupling nut GD-Zn, nickel-plated
- Degree of protection (fully locked): IP66/67
- Order number: 71114212

Cable 4 x 0.34 mm^2 (20 AWG) with M12 socket, elbowed, screw plug, length 5 m (16 ft)
- Material: body PUR; coupling nut CuSn/Ni; cable PVC
- Degree of protection (fully locked): IP66/67
- Order number: 52010285

Connecting devices with M12 plug (IO-Link)

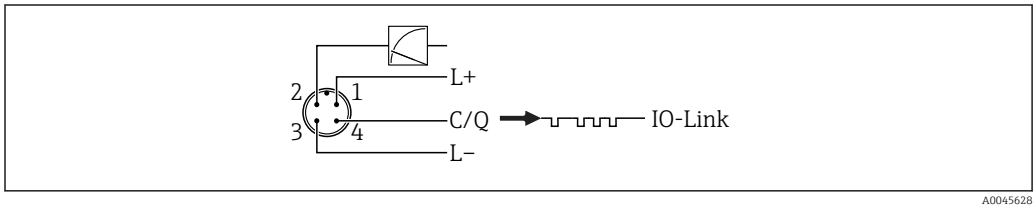

A0045628

1 *Supply voltage +*
2 *4-20 mA*
3 *Supply voltage -*
4 *C/Q (IO-Link communication)*

Connecting devices with 7/8" plug (HART, FOUNDATION Fieldbus)

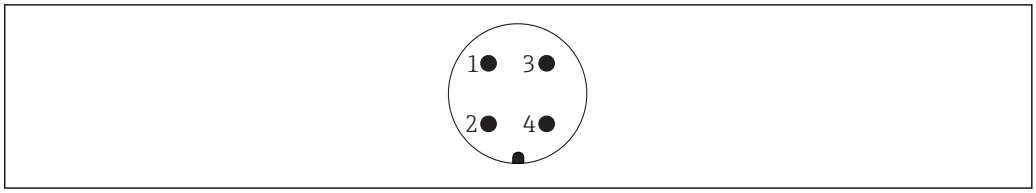

A0011176

1 Signal -
2 Signal +
3 Shield
4 Not assigned

External thread: 7/8 - 16 UNC
- Material: 316L (1.4401)
- Degree of protection: IP66/68

Cable specification

HART

- Endress+Hauser recommends using twisted, shielded twin-core cables.
- The cable outer diameter depends on the cable entry used.

IO-Link

Endress+Hauser recommends using twisted, four-core cable.

PROFIBUS PA

Endress+Hauser recommends using twisted, shielded twin-core cable, preferably cable type A.

For further information regarding cable specifications, see Operating Instructions BA00034S "PROFIBUS DP/PA: Guidelines for planning and commissioning", the PNO guideline 2.092 "PROFIBUS PA User and Installation Guideline" and IEC 61158-2 (MBP).

FOUNDATION Fieldbus

Use a twisted, shielded twin-core cable, preferably cable type A.

For further information on the cable specifications, see Operating Instructions BA00013S "FOUNDATION Fieldbus Overview", FOUNDATION Fieldbus Guideline and IEC 61158-2 (MBP).

Start-up current

- 12 mA or 22 mA (selectable)
- IO-Link: 12 mA

Residual ripple

No influence on 4 to 20 mA signal up to ±5 % residual ripple within the permitted voltage range [according to HART hardware specification HCF_SPEC-54 (DIN IEC 60381-1)].

Influence of power supply

≤0.001 % of URL/V

Overvoltage protection (optional)

The device can be fitted with overvoltage protection. The overvoltage protection is mounted at the factory on the housing thread (M20x1.5) for the cable gland and is approx. 70 mm (2.76 in) in length (take additional length into account when installing). The device is connected as illustrated in the following graphic.

For details refer to TI01013KDE, XA01003KA3 and BA00304KA2.

Ordering information:

Product Configurator, order code for "Mounted accessories", option NA

Wiring

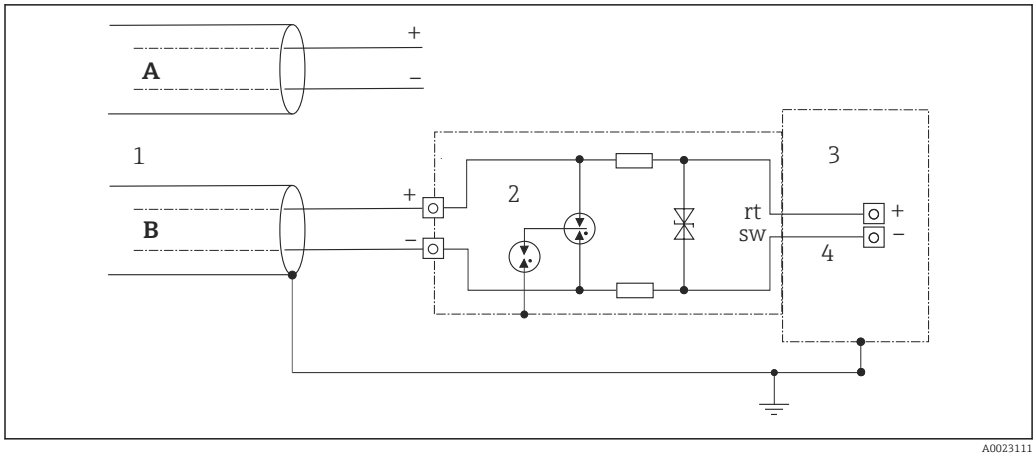

A Without direct shield grounding
B With direct shield grounding
1 Incoming connection cable
2 HAW569-DA2B
3 Unit to be protected
4 Connection cable

Performance characteristics of metallic process membrane

Reference operating conditions

- As per IEC 62828-2
- Ambient temperature T_A = constant, in the range: +21 to +33 °C (+70 to +91 °F)
- Humidity φ= constant, in the range: 5 to 80 % rH
- Atmospheric pressure p_A = constant, in the range: 860 to 1 060 mbar (12.47 to 15.37 psi)
- Position of the measuring cell = constant, in the range:
  FMB50: horizontally ±1°
  FMB51/FMB52/FMB53: vertically ±1°
- Input of LOW SENSOR TRIM and HIGH SENSOR TRIM for lower range value and upper range value
- Zero-point based span
- Material of the process membrane: Alloy C276 (2.4819) and Alloy C276 (2.4819) with coating (AuRh or AuPt)
- Measuring cell material (meter body): Alloy C276 (2.4819), 316L (1.4435)
- Fill fluid: synthetic oil (FDA)/inert oil
- Supply voltage: 24 V DC ±3 V DC
- Load for HART: 250 Ω

Influence of the orientation

- <2.3 mbar (0.0345 psi) if synthetic oil is used (FDA).
- <5 mbar (0.075 psi) if inert oil is used.

A position-dependent zero shift can be corrected → 28.

Calibration position

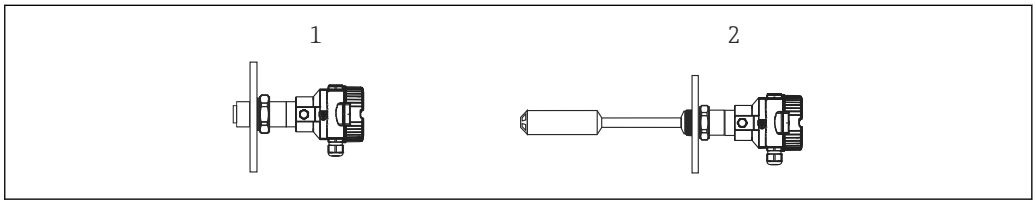

1 FMB50
2 FMB51, FMB52, FMB53

To minimize the effect of the orientation (e.g. in the case of vertical device installation), position offset is preset at the factory.

Resolution

- Current output: 1 µA
- Display: can be set (factory setting: presentation of the maximum accuracy of the transmitter)

Reference accuracy

The reference accuracy comprises the non-linearity according to the limit point method, pressure hysteresis and non-repeatability in accordance with [IEC62828-1/IEC 61298-2].

Measuring cell	Reference accuracy in % of the calibrated span		
	TD	"Standard" option [1]	"Platinum" option [1]
100 mbar (1.5 psi)	▪ TD 1:1 to TD 2:1 ▪ TD > 2:1 to TD 4:1	▪ ±0.2 ▪ ±0.1 x TD	▪ ±0.15 ▪ ±0.075 x TD
400 mbar (6 psi)	▪ TD 1:1 to TD 4:1 ▪ TD > 4:1 to TD 10:1	▪ ±0.2 ▪ ±0.05 x TD	▪ ±0.15 ▪ ±0.0375 x TD
1.2 bar (18 psi)	▪ TD 1:1 to TD 2:1 ▪ TD > 2:1 to TD 12:1	▪ ±0.2 ▪ ±0.1 x TD	▪ ±0.1 ▪ ±0.05 x TD
4 bar (60 psi)	▪ TD 1:1 to TD 4:1 ▪ TD > 4:1 to TD 20:1	▪ ±0.2 ▪ ±0.05 x TD	▪ ±0.1 ▪ ±0.025 x TD
10 bar (150 psi)	▪ TD 1:1 to TD 2.5:1 ▪ TD > 2.5:1 to TD 20:1	▪ ±0.2 ▪ ±0.08 x TD	▪ ±0.1 ▪ ±0.04 x TD

1) Product Configurator, order code for “Reference accuracy”

Thermal change in the zero output and the output span

Version	Measuring cell	−10 to +60 °C (+14 to +140 °F)	+60 to +85 °C (+140 to +185 °F)	Only FMB50: +85 to +100 °C (+185 to +212 °F)
		% of the calibrated measuring span		
FMB50 FMB51/52/53 snap-on	100 mbar (1.5 psi)	< (0.32 + 0.30 x TD)	< (0.34 + 0.40 x TD)	< (0.34 + 0.55 x TD)
FMB51/52/53 welded	100 mbar (1.5 psi)	< (0.32 + 0.50 x TD)	< (0.34 + 0.60 x TD)	-
FMB50/51/52/53	400 mbar (6 psi)	< (0.31 + 0.25 x TD)	< (0.32 + 0.30 x TD)	-
	1.2 bar (18 psi), 4 bar (60 psi), 10 bar (150 psi)	< (0.31 + 0.10 x TD)	< (0.32 + 0.15 x TD)	< (0.33 + 0.20 x TD)

Total performance

The "Total performance" specification comprises the non-linearity including hysteresis, non-reproducibility as well as the thermal change in the zero point.

Total performance in % of the URL				
Version	Measuring cell	−10 to +60 °C (+14 to +140 °F)	+60 to +85 °C (+140 to +185 °F)	Only FMB50: +85 to +100 °C (+185 to +212 °F)
FMB50 FMB51/52/53 snap-on	100 mbar (1.5 psi)	<0.35	<0.45	<0.6
FMB51/52/53 welded	100 mbar (1.5 psi)	<0.8	<1	-
FMB50/51/52/53	400 mbar (6 psi)	<0.35	<0.45	<0.6
	1.2 bar (18 psi), 4 bar (60 psi), 10 bar (150 psi)	<0.15	<0.2	<0.25

Long-term stability

Measuring cell	Long-term stability [%]
100 mbar (1.5 psi)	▪ <0.18 of the upper range limit (URL) / year ▪ <0.45 of the upper range limit (URL) / 5 years
400 mbar (6 psi), 1.2 bar (18 psi)	▪ <0.1 of the upper range limit (URL) / year ▪ <0.25 of the upper range limit (URL) / 5 years
4 bar (60 psi), 10 bar (150 psi)	▪ <0.05 of the upper range limit (URL) / year ▪ <0.125 of the upper range limit (URL) / 5 years

Total error

The total error comprises the long-term stability and the total performance:

Measuring cell	% of the URL/year (in the permitted temperature range)
100 mbar (1.5 psi)	▪ Snap-on: ±0.63 ▪ Welded:: ±1.0
400 mbar (6 psi),	±0.61
1.2 bar (18 psi)	±0.27
4 bar (60 psi), 10 bar (150 psi)	±0.25

Warm-up time

- 4 to 20 mA HART:
  - FMB50 = ≤ 5 s
  - FMB51/FMB52/FMB53 = ≤ 8 s
- IO-Link: <1 s
- PROFIBUS PA: ≤ 8 s
- FOUNDATION Fieldbus: ≤ 20 s (≤ 45 s after a TOTAL reset)

Installation

General installation instructions

The position-dependent zero point shift can be corrected:
- directly at the device via operating keys on the electronic insert
- directly at the device via operating keys on the display
- via digital communication if the cover is not open .

Endress+Hauser offers a mounting bracket for installing the device on pipes or walls.

FMB50

Level measurement

- Always install the device below the lowest measuring point.
- Do not install the device at the following positions:
  - in the filling curtain
  - in the tank outflow
  - or at a point in the tank that can be affected by pressure pulses from the agitator
- The calibration and functional test can be carried out more easily if you mount the device downstream of a shutoff device.
- Deltapilot M must be included in the insulation for media that can harden when cold.

Pressure measurement in gases

Mount Deltapilot M with shutoff device above the tapping point so that any condensate can flow into the process.

Pressure measurement in steams

Use a siphon if measuring pressure in steams.

The siphon reduces the temperature to almost the ambient temperature.

Pressure measurement in liquids

Mount Deltapilot M with the shutoff device below or at the same level as the tapping point.

FMB51/FMB52/FMB53

- When mounting rod and cable versions, make sure that the probe head is located at a point as free as possible from flow. To protect the probe from impact resulting from lateral movement, mount the probe in a guide tube (preferably made of plastic) or secure it with a clamping fixture.
- In the case of devices for hazardous areas, comply strictly with the safety instructions when the housing cover is open.
- The length of the extension cable or the probe rod is based on the planned level zero point. The height of the protective cap must be taken into consideration when designing the layout of the measuring point. The level zero point (E) corresponds to the position of the process membrane. Level zero point = E; top of the probe = L.

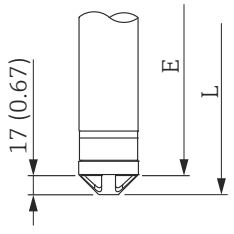

Unit mm (in)

Suspension clamp (required for FMB53)
Material: → 🖹 57
Ordering information:
Order number: 52010869
Product Configurator, order code for "Accessory enclosed", option "PO".

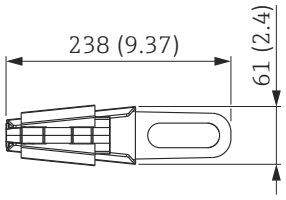

Unit mm (in)

Additional installation instructions

PE cable length > 300 m (984 ft)

Two suspension clamps must be used for PE cables longer than 300 m (984 ft).

Cable length tolerances

- FMB52
  - Cable length < 5 m (16 ft): up to −35 mm (−1.38 in)
  - Cable length 5 to 10 m (16 to 33 ft): up to −75 mm (−2.95 in)
  - Cable length 10 to 100 m (33 to 328 ft): up to −100 mm (−3.94 in)
- FMB53
  - Cable length < 5 m (16 ft): up to ±17.5 mm (0.69 in)
  - Cable length 5 to 10 m (16 to 33 ft): up to ±37.5 mm (1.48 in)
  - Cable length 10 to 100 m (33 to 328 ft): up to ±50 mm (1.97 in)

Rod length tolerances

FMB51: Rod length < 4 000 mm (157 in): up to −4 mm (−0.16 in)

Wall and pipe mounting, transmitter (optional)

Endress+Hauser offers the following mounting bracket for installing the device on pipes or walls:

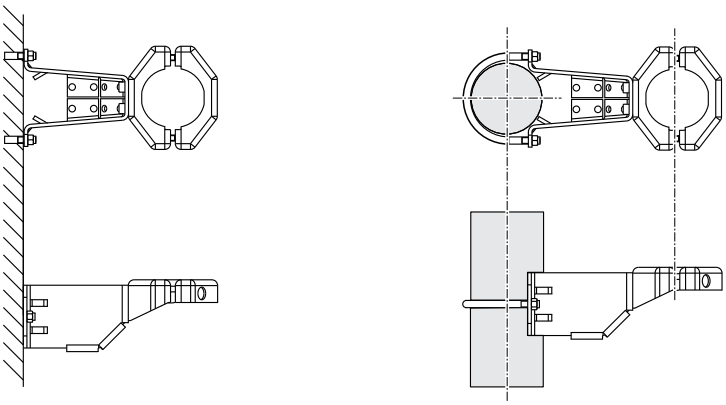

Ordering information:
- included in the delivery for the FMB50/51/52 with a separate housing (available for order via feature "Separate housing") and for the FMB53
- available for order as a separate accessory (Part No.: 71102216).

Further details→ 🖹 51.

"Separate housing" version

With the "separate housing" version, you are able to mount the housing with the electronics insert at a distance from the measuring point. This allows for trouble-free measurement:
- Under particularly difficult measuring conditions (at installation locations that are cramped or difficult to access)
- If rapid cleaning of the measuring point is required and
- If the measuring point is exposed to vibrations.

You can choose between different cable versions:
- PE: 2 m (6.6 ft), 5 m (16 ft) and 10 m (33 ft)
- FEP: 5 m (16 ft).

Ordering information:
- Product Configurator, order code for "Separate housing" or
- Product Configurator, order code for "Accessory enclosed" ordering feature, option PA

Dimensions → 🖹 51

In the case of the "separate housing" version, the measuring cell is delivered with the process connection and cable ready mounted. The housing and a mounting bracket are enclosed as separate units. The cable is provided with a socket at both ends. These sockets are simply connected to the housing and the measuring cell.

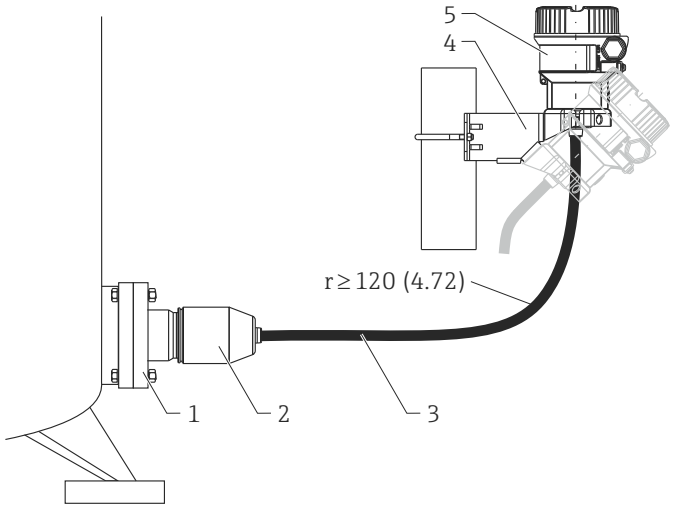

1 Process connection with measuring cell - see the following section for the degrees of protection
2 Process connection adapter (weight: 0.93 kg (2.05 lb))
3 Cable (weight: 0.05 kg/meter (0.11 lb)), both ends are fitted with a socket
4 Mounting bracket provided, suitable for pipe and wall mounting (for pipes from 1 1/4" up to 2" diameter)
5 Housing with electronic insert - degrees of protection → 🖹 32

Engineering unit mm (in)

Degree of protection for the process connection and measuring cell with the use of
- FEP cable:
  - IP 69 [2)]
  - IP 66 NEMA 4/6P
  - IP 68 (1.83 mH_2O for 24 h) NEMA 4/6P
- PE cable:
  - IP 66 NEMA 4/6P
  - IP 68 (1.83 mH_2O for 24 h) NEMA 4/6P

Technical data of the PE and FEP cable:
- Minimum bending radius: 120 mm (4.72 in)
- Cable extraction force: max. 450 N (101.16 lbf)
- Resistance to UV light

2) Designation of the IP protection class according to DIN EN 60529. Previous designation "IP69K" according to DIN 40050 Part 9 is no longer valid (standard withdrawn on November 1, 2012). The tests required by both standards are identical.

Use in hazardous area:
- Intrinsically safe installations (Ex ia/IS)
- FM/CSA IS: for Div.1 installation only

Oxygen applications

Oxygen and other gases can react explosively to oils, grease and plastics, such that, among other things, the following precautions must be taken:
- All components of the system, such as measuring instruments, must be cleaned in accordance with the BAM (DIN 19247) requirements.
- Depending on the materials used, a certain maximum temperature and a maximum pressure must not be exceeded for oxygen applications.
  The maximum temperature T_{max} for oxygen applications is 60 °C (140 °F).

The devices that are suitable for gaseous oxygen applications are indicated by p_{max} in the following table.

Order code for devices [1], cleaned for oxygen applications	p_{max} for oxygen applications
FMB50 [2]	▪ Depends on the lowest-rated element, with regard to pressure, of the selected components: overpressure limit of the measuring cell, process connection (1.5 x PN) [3] ▪ Depends on the fill fluid [4]
FMB51 [2]	▪ Depends on the lowest-rated element, with regard to pressure, of the selected components: overpressure limit of the measuring cell or the process connection (1.5 x PN) [3] ▪ Depends on fill fluid [4] ▪ Depends on seal material

1) Device only, not accessory or enclosed accessory
2) Product Configurator, order code for "Service", option "HB"
3) → 🖹 10, "Measuring range" section and → 🖹 37, "Mechanical construction" section
4) Oxygen applications possible with FKM seal and inert oil.

PWIS cleaning

Special cleaning of the transmitter to remove paint-wetting substances, for use in paint shops, for instance.

Ordering information:

Ordering information: Product Configurator, "Service" ordering feature, option HC

The stability of the materials used must be checked before using them in the medium.

The protective cap of the process isolating diaphragm must be removed if necessary (FMB51/ FMB52/ FMB53).

Applications with hydrogen

A **gold-coated** metal process membrane offers universal protection against hydrogen diffusion, both in gas applications and in applications with water-based solutions.

Applications with hydrogen in aqueous solutions

A **gold/rhodium-coated** metallic process membrane (AU/Rh) offers effective protection against hydrogen diffusion.

Special measuring cells for acids, alkalis or sea water (not FMB50)

For acids, alkalis or sea water, Endress+Hauser offers process membranes with a gold/platinum coating.

With temperature exposure (up to 85 °C (185 °F)) there is an additional zero point deviation of 1.1 mbar (0.0165 psi).

Ordering information:

Product Configurator, order code for "Membrane material", option N

Environment

Ambient temperature range

Device

- Without LCD display: −40 to +85 °C (−40 to +185 °F) (−25 to +85 °C (−13 to +185 °F) under static conditions with IO-Link)
- Without LCD with IO-Link **with** current output: +70 °C (+158 °F)
- Without LCD with IO-Link **without** current output: +80 °C (+176 °F)
- With LCD display: −20 to +70 °C (−4 to +158 °F)
  Extended temperature operation range (−40 to +85 °C (−40 to +185 °F)) with limitations in optical properties, such as display speed and contrast, for example
- With separate housing (not for diaphragm seals): −20 to +60 °C (−4 to +140 °F)
  (Installation without insulation)

Included, optional accessories

M12 plug-in jack, 90° angle and 5 meter cable: −25 to +70 °C (−13 to +158 °F)

Ambient temperature limits

Version	FMB50	FMB51	FMB52	FMB53
Without LCD display	−40 to +85 °C (−40 to +185 °F)		With PE cable: −40 to +70 °C (−40 to +158 °F) With FEP cable: −40 to +80 °C (−40 to +176 °F)	
With LCD display [1]	−20 to +70 °C (−4 to +158 °F)			
With M12 plug , elbowed	−25 to +85 °C (−13 to +185 °F)		With PE cable: −25 to +70 °C (−13 to +158 °F) With FEP cable: −25 to +80 °C (−13 to +176 °F)	
With separate housing (PE and FEP cable)	−20 to +60 °C (−4 to +140 °F)			

1) Extended temperature application range (−40 to +85 °C (−40 to +185 °F)) with restrictions in optical properties such as display speed and contrast

Storage temperature range

Version	FMB50	FMB51	FMB52	FMB53
Without LCD display	−40 to +90 °C (−40 to +194 °F)		With PE cable: −40 to +70 °C (−40 to +158 °F) With FEP cable: −40 to +80 °C (−40 to +176 °F)	
With LCD display [1]	−40 to +85 °C (−40 to +185 °F)			
With M12 plug, elbowed	−25 to +70 °C (−13 to +158 °F)		With PE cable: −25 to +70 °C (−13 to +158 °F) With FEP cable: −25 to +70 °C (−13 to +158 °F)	
With separate housing and FEP cable	−20 to +60 °C (−4 to +140 °F)			

1) Extended temperature application range (−40 to +85 °C (−40 to +185 °F)) with restrictions in optical properties such as display speed and contrast

Climate class

Class 4K4H (air temperature: −20 to +55 °C (−4 to +131 °F), relative humidity: 4 to 100%) satisfied as per DIN EN 60721-3-4 (condensation possible)

Degree of protection

Depending on the used electrical connection → 🖹 20
F31 housing: IP 68 (1,83 mH2O for 24 h)
Ordering information:
Product Configurator, "Electrical connection" ordering feature

Vibration resistance

Device/accessory	Test standard	Vibration resistance
FMB50, FMB52, FMB53	GL VI-7-2 ▪ Part 7: Guidelines for the Performance of Type Approvals ▪ Chapter 2: Test Requirements for Electrical / Electronic Equipment and Systems	Guaranteed for: 5 to 25 Hz: ±1.6 mm (0.06 in); 25 to 100 Hz: 4 g in all 3 axes
FMB50, FMB52, FMB53 with mounting bracket	IEC 62828-1 / IEC 61298-3 IEC 60068-2-6	Guaranteed for: 10 to 60 Hz: ±0.15 mm (0.01 in); 60 to 500 Hz: 2 g in all 3 axes
FMB51	IEC 62828-1 / IEC 61298-3 IEC 60068-2-6	Guaranteed for: 10 to 60 Hz: ±0.075 mm (0.003 in) 60 to 150 Hz 1g in all 3 axes

Electromagnetic compatibility

- Electromagnetic compatibility as per all the relevant requirements of the EN 61326 series and NAMUR Recommendation EMC (NE21).
- Max. deviation during EMC-tests : < 0.5 % of the span
- All tests were performed with full measurement range (TD 1:1).

Further details can be found in the manufacturer declaration.

Process

Process temperature range

FMB50	FMB51	FMB52	FMB53
−10 to +100 °C (+14 to +212 °F) 135 °C (275 °F) for 30 min. maximum	−10 to +85 °C (+14 to +185 °F)	With PE cable: −10 to +70 °C (+14 to +158 °F) With FEP cable: −10 to +80 °C (+14 to +176 °F)	
		Min. process temperature when using the KALREZ seal: −3 °C (+27 °F)	

Lateral load FMB51 (static)

≤30 Nm (22.13 lbf ft)

Pressure specifications

The maximum pressure for the device depends on the lowest-rated element with regard to pressure.

Components are: process connection, optional mounting parts, or accessories.

WARNING

Incorrect design or use of the device may cause injury due to bursting parts!

- Only operate the device within the specified limits for the components!
- MWP (maximum working pressure): The maximum working pressure is specified on the nameplate. This value refers to a reference temperature of +20 °C (+68 °F) and may be present at the device for an unlimited time. Observe the temperature dependency of the maximum working pressure. For flanges, refer to the following standards for the permitted pressure values at higher temperatures: EN 1092-1 (with regard to their stability/temperature property, the materials 1.4435 and 1.4404 are grouped together under EN 1092-1; the chemical composition of the two materials can be identical.), ASME B 16.5a, JIS B 2220 (the latest version of the standard applies in each case). MWP data that deviate from this is provided in the relevant sections of the Technical Information.
- The overpressure limit is the maximum pressure that a device may be subjected to during a test. The overpressure limit exceeds the maximum working pressure by a certain factor. This value refers to a reference temperature of +20 °C (+68 °F).
- The Pressure Equipment Directive (2014/68/EU) uses the abbreviation "PS". The abbreviation "PS" corresponds to the MWP (maximum working pressure) of the device.
- The Pressure Equipment Directive (2014/68/EU) uses the abbreviation "PT". The abbreviation "PT" corresponds to the OPL (Overpressure Limit) of the device.
- In the case of measuring cell range and process connection combinations where the overpressure limit of the process connection is less than the nominal value of the measuring cell, the device is set at the factory, at the very maximum, to the OPL value of the process connection. If the entire measuring cell range must be used, select a process connection with a higher OPL value (1.5 x PN; MWP = PN).
- Oxygen applications: In oxygen applications, the values for "p_{max} and T_{max} for oxygen applications may not be exceeded.

Mechanical construction

Device height

The device height is calculated from

- the height of the housing
- the height of the relevant process connection.

The individual heights of the components are listed in the following sections. To calculate the device height simply add up the individual heights of the components. If necessary, the installation clearance (the space used to install the device) must also be taken into account. You can use the following table for this:

Section	Page	Height
Height of housing	→ 35	
Process connections	→ 37	
Installation clearance	-	
Device height		

F31 housing, aluminum

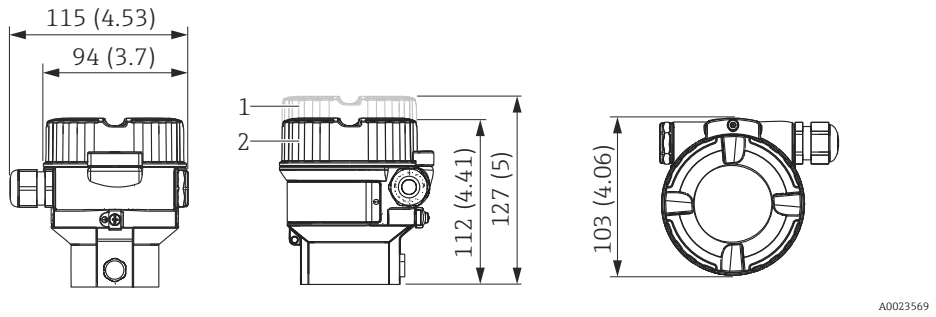

1 Cover with viewing window
2 Cover without viewing window

Engineering unit mm (in). Front view, left-hand side view, top view

Material	Weight kg (lbs)		Option [1]
	With display	Without display	
Aluminium [2]	1.1 (2.43)	1.0 (2.21)	I
Aluminum with glass viewing window [2]			J

1) Product Configurator, "Housing" ordering feature
2) Degree of protection dependent on cable entry used → 32

F15 housing, stainless steel (hygienic)

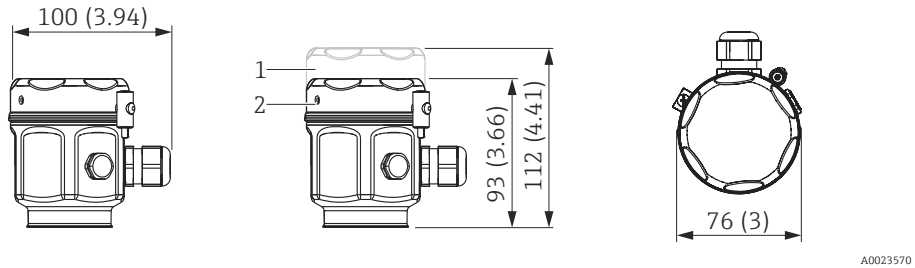

1 Cover with viewing window
2 Cover without viewing window

Engineering unit mm (in). Front view, left-hand side view, top view
Thread depth of cable gland 10 mm (0.39 in) max.

Material	Weight kg (lbs)		Option [1]
	With display	Without display	
Stainless steel [2]	1.1 (2.43)	1.0 (2.21)	Q
Stainless steel with glass viewing window [2]			R
Stainless steel with plastic viewing window [2]			S

1) Product Configurator, "Housing" ordering feature
2) Degree of protection depends on the cable entry used → 🖹 32

Diameter of process membrane

35.8 mm (1.41 in)

Explanation of terms

- DN or NPS or A = alphanumeric designation of the flange size
- PN or Class or K = alphanumeric pressure rating of a component

Process connections FMB50, FMB51, FMB52 **ISO 228 G and NPT threaded connection**

A

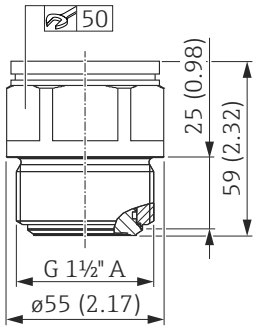

B

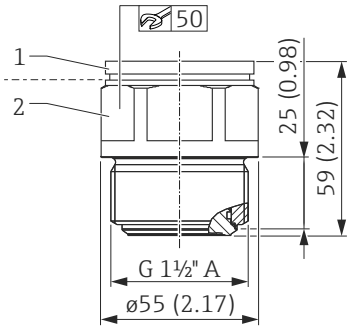

C

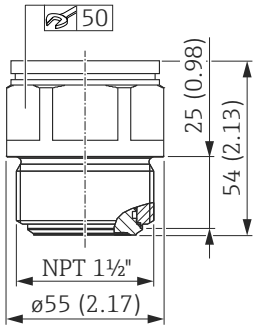

Unit mm (in)

Item	Designation	Material	Weight	Option [1]
			kg (lb)	
A	ISO 228 G 1 ½" A thread	AISI 316L (1.4435)	0.8 (1.76)	GGJ
B	ISO 228 G 1 ½" A thread	▪ 1: Top section AISI 316L (1.4435) ▪ 2: Bottom section Alloy C276 (2.4819)	0.8 (1.76)	GGC
C	ANSI 1 ½" MNPT thread	AISI 316L (1.4435)	0.8 (1.76)	RGJ

1) Product Configurator, order code for "Process connection"

Process connections FMB50, FMB51, FMB52

EN flanges, connection dimensions in accordance with EN 1092-1

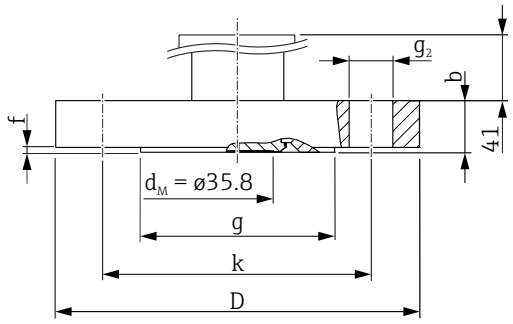

D *Diameter of flange*
b *Thickness*
g *Raised face*
f *Height of raised face*
k *Pitch diameter*
g_2 *Diameter of hole*

Unit mm

Flange [1] [2]							Boltholes			Weight	Option [3]
DN	PN	Form	D	b	g	f	Quantity	g_2	k		
			[mm]	[mm]	[mm]	[mm]		[mm]	[mm]	[kg (lb)]	
DN 40	PN 10-40	B1	150	18	88	2	4	18	110	3.05 (6.72)	CEJ
DN 50	PN 10-40	B1	165	20	102	2	4	18	125	3.75 (8.27)	CFJ
DN 80	PN 10-40	B1	200	24	138	2	8	18	160	5.55 (12.24)	CGJ
DN 100	PN 10-16	B1	220	20	158	2	8	18	180	6.75 (14.88)	CHJ

1) The roughness of the surface in contact with the medium including the raised face of the flange (all standards) is R_a10 to 12.5 µm (394 to 492 µin). Lower surface roughness available on request.
2) Material AISI 316L: Endress+Hauser supplies DIN/EN stainless steel flanges as per AISI 316L (DIN/EN material number 1.4404 or 14435). With regard to their stability-temperature property, the materials 1.4404 and 1.4435 are grouped together under 13EO in EN 1092-1: 2001 Tab. 18. The chemical composition of the two materials can be identical.
3) Product Configurator, order code for "Process connection"

ASME flanges, connection dimensions as per ASME B 16.5, raised face RF

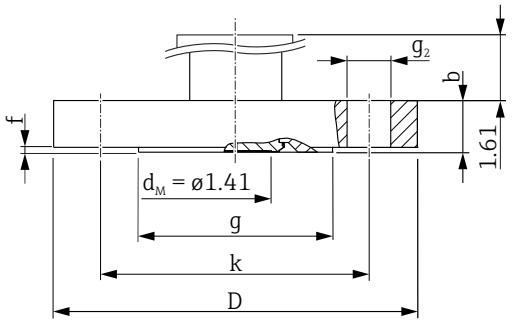

D *Diameter of flange*
b *Thickness*
g *Raised face*
f *Height of raised face*
k *Pitch diameter*
g_2 *Diameter of hole*

Unit mm

Flange [1] [2]						Boltholes			Weight	Option [3]
NPS	Class	D	b	g	f	Quantity	g_2	k		
[in]	[lb./sq in]	[in]	[in]	[in]	[in]		[in]	[in]	[kg (lb)]	
1 ½	150	5	0.69	2.88	0.06	4	0.62	3.88	2.55 (5.62)	AEJ (not FMB51/52)
2	150	6	0.75	3.62	0.06	4	0.75	4.75	3.45 (7.61)	AFJ
3	150	7.5	0.94	5	0.06	4	0.75	6	6.15 (13.56)	AGJ
4	150	9	0.94	6.19	0.06	8	0.75	7.5	8.25 (18.19)	AHJ

1) The roughness of the surface in contact with the medium including the raised face of the flange (all standards) is R_a3.2 to 6.3 µm (125 to 250 µin). Lower surface roughness available on request.
2) Material AISI 316/316L: Combination of AISI 316 for required pressure resistance and AISI 316L for required chemical resistance (dual rated).
3) Product Configurator, "Process connection" ordering feature

JIS flanges, connection dimensions in accordance with JIS B 2220 BL, raised face RF

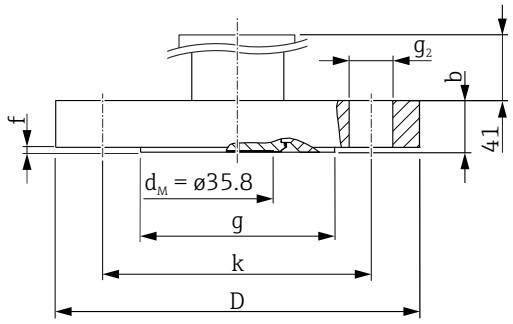

D Diameter of flange
b Thickness
g Raised face
f Height of raised face
k Pitch diameter
g_2 Diameter of hole

Unit mm

Flange [1] [2]						Boltholes			Weight	Option [3]
A	K	D	b	g	f	Quantity	g_2	k		
		[mm]	[mm]	[mm]	[mm]		[mm]	[mm]	[kg (lb)]	
40 A	10 K	140	16	81	2	4	19	105	2.55 (5.62)	KEJ
50 A	10 K	155	16	96	2	4	19	120	2.95 (6.50)	KFJ
80 A	10 K	185	18	126	2	8	19	150	4.25 (9.37)	KGJ
100 A	10 K	210	18	151	2	8	19	175	5.35 (11.79)	KHJ

1) The roughness of the surface in contact with the medium including the raised face of the flange (all standards) is R_a3.2 to 6.3 µm (125 to 250 µin). Lower surface roughness available on request.
2) Material AISI 316L (1.4435)
3) Product Configurator, order code for "Process connection"

Process connections FMB50 Hygienic connections

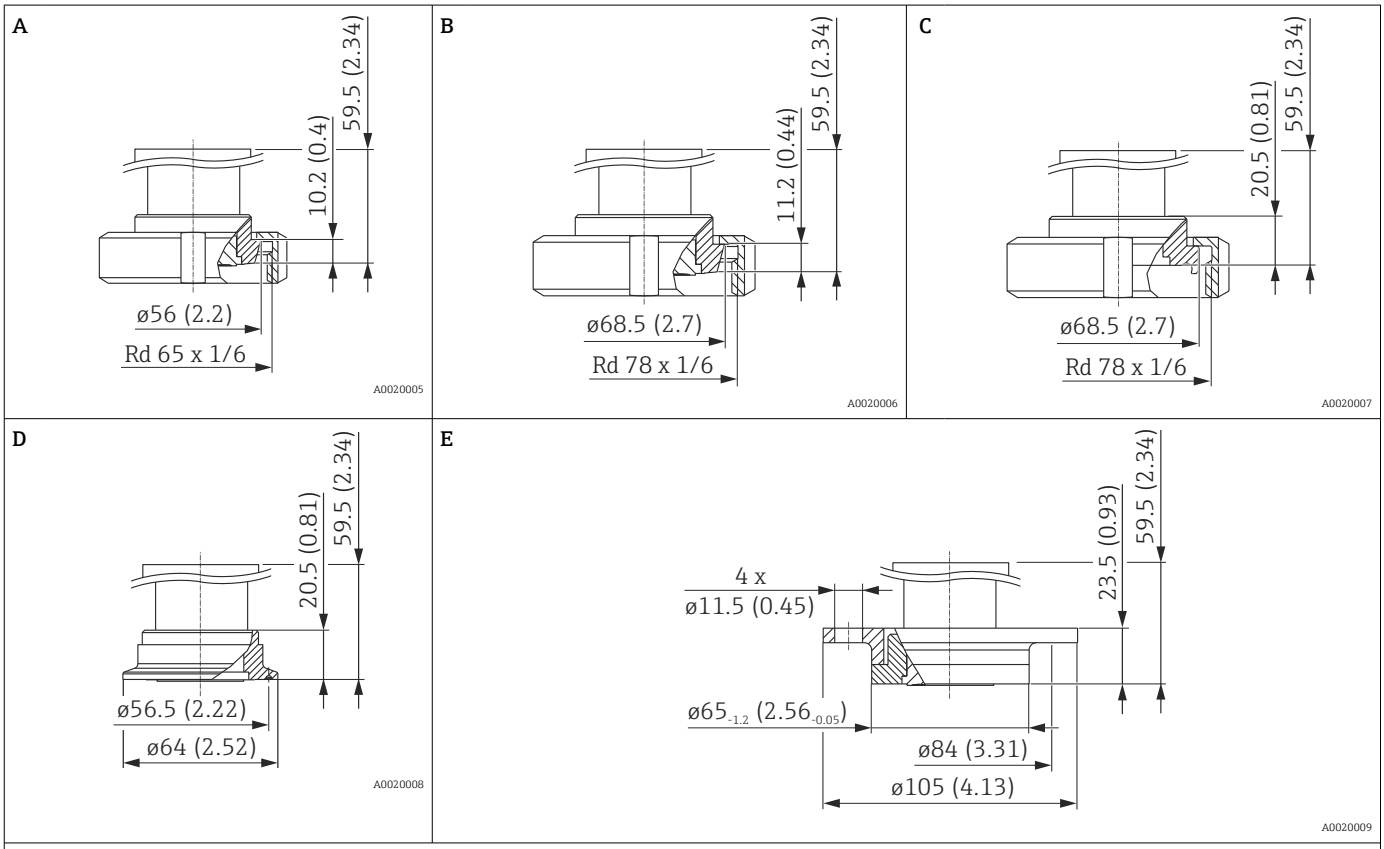

Unit mm (in)

Item [1]	Designation	PN	Material	Weight	Option [2]
				kg (lb)	
A	DIN 11851 DN 40	PN 25	AISI 316L (1.4435)	0.7 (1.54)	MZJ [3]
B	DIN 11851 DN 50	PN 25		0.9 (1.98)	MRJ [3]
C	DIN 11864-1 A DN 50 DIN 11866-A pipe, slotted nut, 316L	PN 16		1 (2.21)	NDJ [3]
D	Tri-Clamp ISO 2852 DN 40 – DN 51 (2"), DIN 32676 DN 50	-		0.7 (1.54)	TDJ
E	DRD DN 50 (65 mm), slip-on flange AISI 304 (1.4301)	PN 25		1.1 (1.98)	TIJ

1) Roughness of the surface in contact with the medium is R_a <0.76 µm (30 µin) as standard. Lower surface roughness available on request.
2) Product Configurator, order code for "Process connection"
3) Endress+Hauser supplies these slotted nuts in stainless steel AISI 304 (DIN/EN material number 1.4301) or in AISI 304L (DIN/EN material number 1.4307).

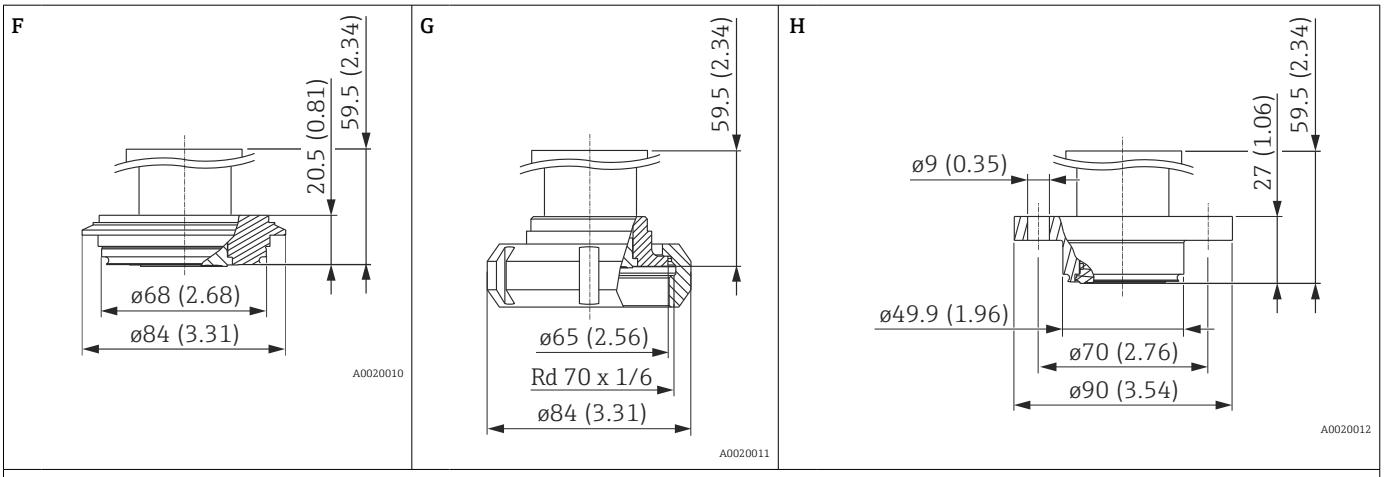

Unit mm (in)

Item [1]	Designation	PN	Material	Weight	Option [2]
				kg (lb)	
F	Varivent type N for 40 – 162 pipes	PN 40	AISI 316L (1.4435)		TRJ
G	SMS 2"	PN 25		1 (2.21)	TXJ [3]
H	NEUMO, D50	PN 16		0.7 (1.54)	S4J

1) Roughness of the surface in contact with the medium is R_a <0.76 µm (30 µin) as standard. Lower surface roughness available on request.
2) Product Configurator, order code for "Process connection"
3) Endress+Hauser supplies these slotted nuts in stainless steel AISI 304 (DIN/EN material number 1.4301) or in AISI 304L (DIN/EN material number 1.4307).

Universal process adapter

A

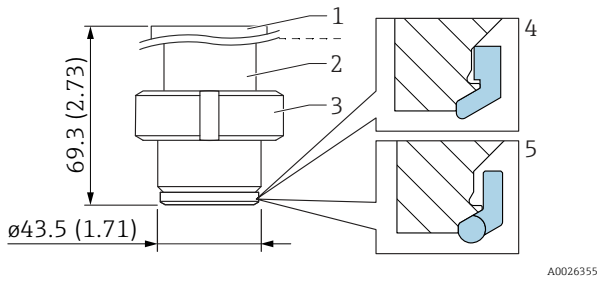

B

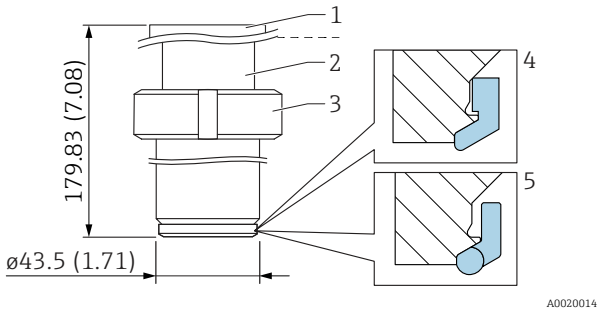

1 Top section: AISI 316L (1.4404)
2 Bottom section: AISI 316L (1.4435)
3 Slotted nut: AISI 304 (1.4301) or AISI 304L (1.4307)
4 Form seal: silicone or EPDM
5 EPDM O-ring with support ring AISI 316L (1.4404)

Unit mm (in)

- Roughness of the surface in contact with the medium is R_a <0.76 µm (30 µin) as standard. Surface finish R_a <0.38 µm (15 µin) electropolished (wetted), ordering information: Product Configurator, order code for "Service", option "HK"
- Silicone form seal:
  FDA 21CFR177.2600/USP Class VI, order number: 52023572
- EPDM form seal:
  FDA (177.2600), USP Class VI; 5 pcs, order number: 71100719
- EPDM O-ring with AISI 316L (1.4404) support ring:
  FDA (177.2600), USP Class VI; 1 pc., order number: 71431380

Item	Designation	PN	Weight	Option [1]
		bar (psi)	kg (lb)	
A	Universal process adapter Form seal made of silicone (4)	10 (145)	0.8 (1.76)	UPJ
	Universal process adapter EPDM form seal (4)			URJ
	Universal process adapter EPDM O-ring with support ring (5) [2]			UNJ
B	Universal process adapter 6 inch extension, form seal made of silicone (4)		1.7 (3.75)	UQJ
	Universal process adapter 6 inch extension, EPDM O-ring with support ring (5) [2]			UOJ

1) Product Configurator, order code for "Process connection"
2) With EHEDG approval.

Anderson process adapter

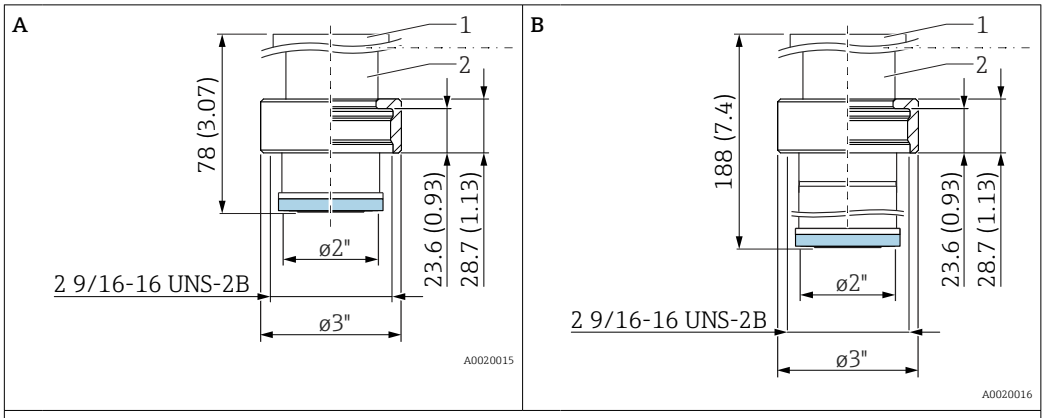

Unit mm (in)

Item [1]	Designation	PN	Material	Weight	Option [2]
		bar (psi)		kg (lb)	
A	Anderson short process adapter 2-3/16", 316L, incl. silicone form seal FDA 21CFR177.2600	3.5 (50)	▪ 1: Top section AISI 316L (1.4404) ▪ 2: Bottom section AISI 316L (1.4435) ▪ Slotted nut AISI 316L (1.4404)	1.5 (3.31)	USJ
B	Anderson long process adapter 6-1/2", 316L, incl. silicone form seal FDA 21CFR177.2600			2.9 (6.39)	UTJ

1) Roughness of the surface in contact with the medium is R_a <0.76 µm (30 µin) as standard. Lower surface roughness available on request.
2) Product Configurator, order code for "Process connection"

Process connections FMB51 (rod version)

Threaded connection ISO 228 and NPT

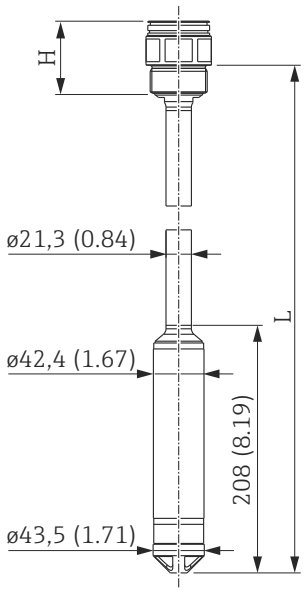

H For dimensions of process connections → 🖹 37
L Probe length L = 0.4 to 4 m (1.3 to 13 ft) - see Product Configurator, order code for "Probe connection"

Engineering unit mm (in)

Process connection incl. measuring cell	Weight
Housing weight	→ 🖹 35
Process connection weight	→ 🖹 37
Pipe incl. cable	0.77 kg/m (1.70 lbs/3.3 ft)
Threaded connection incl. measuring cell tube and measuring cell	1.65 kg (3.64 lb)
Flange connection incl. measuring cell tube and measuring cell, without a flange	-
Total weight of device	

EN/DIN, ANSI and JIS flanges

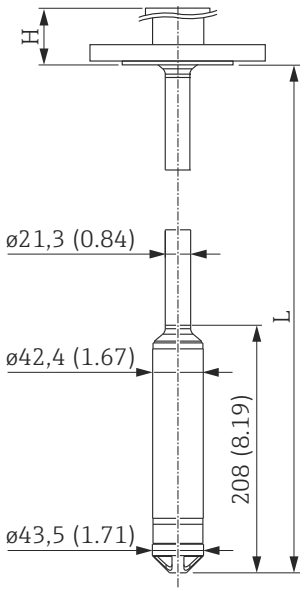

H For dimensions of process connections
L Probe length L = 0.4 to 4 m (1.3 to 13 ft) - see Product Configurator, order code for "Probe connection"

Engineering unit mm (in)

Process connection incl. measuring cell	Weight
Housing weight	→ 🖹 35
Process connection weight	→ 🖹 37
Pipe incl. cable	0.77 kg/m (1.70 lbs/3.3 ft)
Threaded connection incl. measuring cell tube and measuring cell	-
Flange connection incl. measuring cell tube and measuring cell, without a flange	1.30 kg (2.87 lb)
Total weight of device	

Process connections FMB52 (cable version)

Threaded connection ISO 228 and NPT

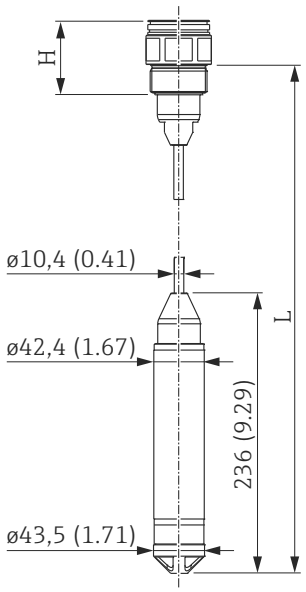

H For dimensions of process connections → 🖹 37
L Probe length L = 500 to 300 000 mm (20 to 11 810 in) - see Product Configurator, order code for "Probe connection"

Engineering unit mm (in)

Process connection incl. measuring cell	Weight
Housing weight	→ 🖹 35
Process connection weight	→ 🖹 37
PE cable	0.13 kg/m (0.28 lbs/3.3 ft)
FEP cable	0.18 kg/m (0.40 lbs/3.3 ft)
Threaded connection incl. measuring cell tube and measuring cell	1.65 kg (3.64 lb)
Flange connection incl. measuring cell tube and measuring cell, without a flange	-
Total weight of device	

EN/DIN, ANSI and JIS flanges

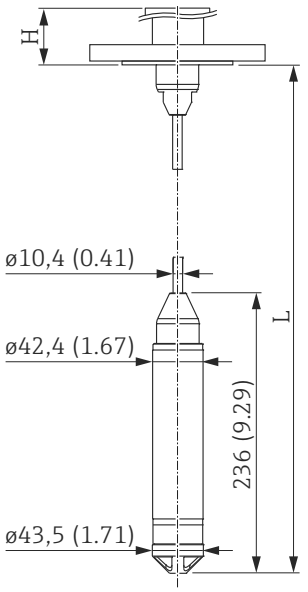

H For dimensions of process connections
L Probe length L = 500 to 300 000 mm (20 to 11 810 in) - see Product Configurator, order code for "Probe connection"

Engineering unit mm (in)

Process connection incl. measuring cell	Weight
Housing weight	→ 35
Process connection weight	→ 37
PE cable	0.13 kg/m (0.28 lbs/3.3 ft)
FEP cable	0.18 kg/m (0.40 lbs/3.3 ft)
Flange connection incl. measuring cell tube and measuring cell, without a flange	1.30 kg (2.87 lb)
Total weight of device	

Dimensions of FMB53 with F31 housing, suspension clamp and mounting bracket

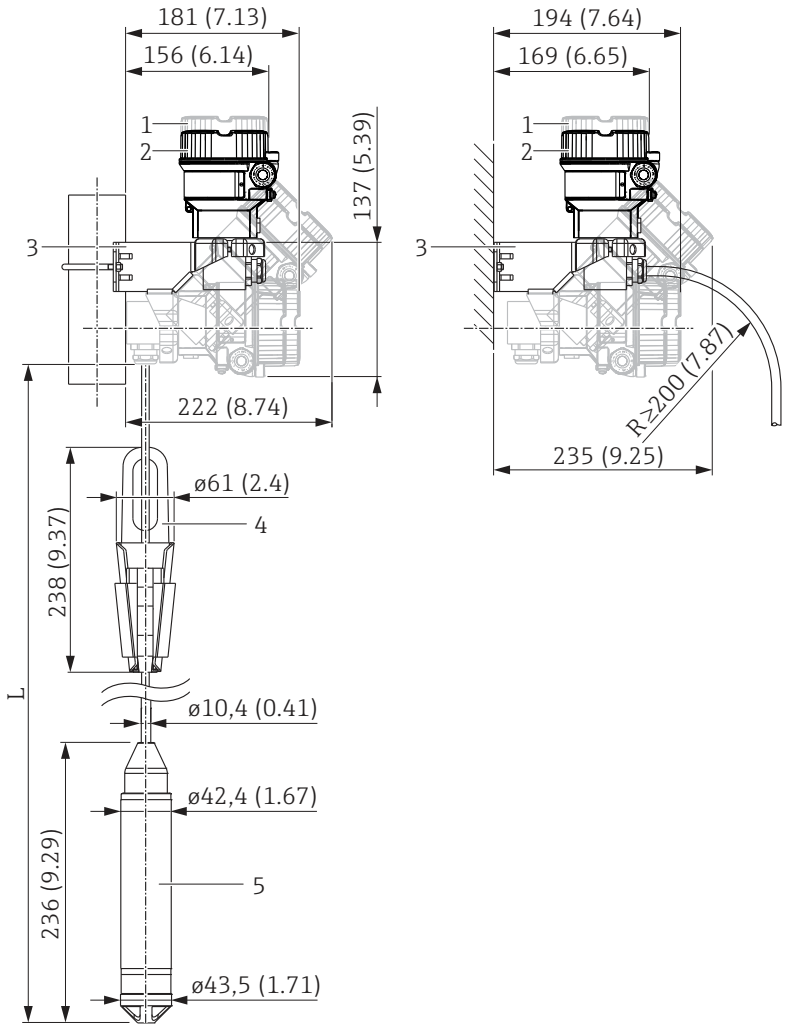

1 Dimensions for housing covers with a viewing window.
2 Housing covers without a viewing window are approx. 15 mm (0.59 in) lower.
3 Mounting bracket for pipe and wall mounting (for pipes from 1 ¼" up to 2" diameter)
4 Suspension clamp
5 Measuring cell tube
L Probe length L = 500 to 300 000 mm (20 to 11 810 in) - see Product Configurator, order code for "Probe connection"

FMB53 with suspension clamp and mounting bracket (mounting bracket without marine approval)
Unit mm (in)

Process connection incl. measuring cell	Weight
Housing weight	→ 🖹 35
PE cable (cable length > 120 m (394 ft) = Delivery on cable reel)	0.13 kg/m (0.28 lbs/3.3 ft)
FEP cable (cable length > 120 m (394 ft) = Delivery on cable reel)	0.18 kg/m (0.40 lbs/3.3 ft)
Mounting bracket	0.2 kg (0.44 lb)
Pipe bend incl. cable entry	0.65 kg (1.43 lb)
Suspension clamp	0.4 kg (0.88 lb)
Measuring cell tube incl. measuring cell	1.0 kg (2.21 lb)
Total weight of device	

Dimensions of FMB53 with F15 housing, suspension clamp and mounting bracket

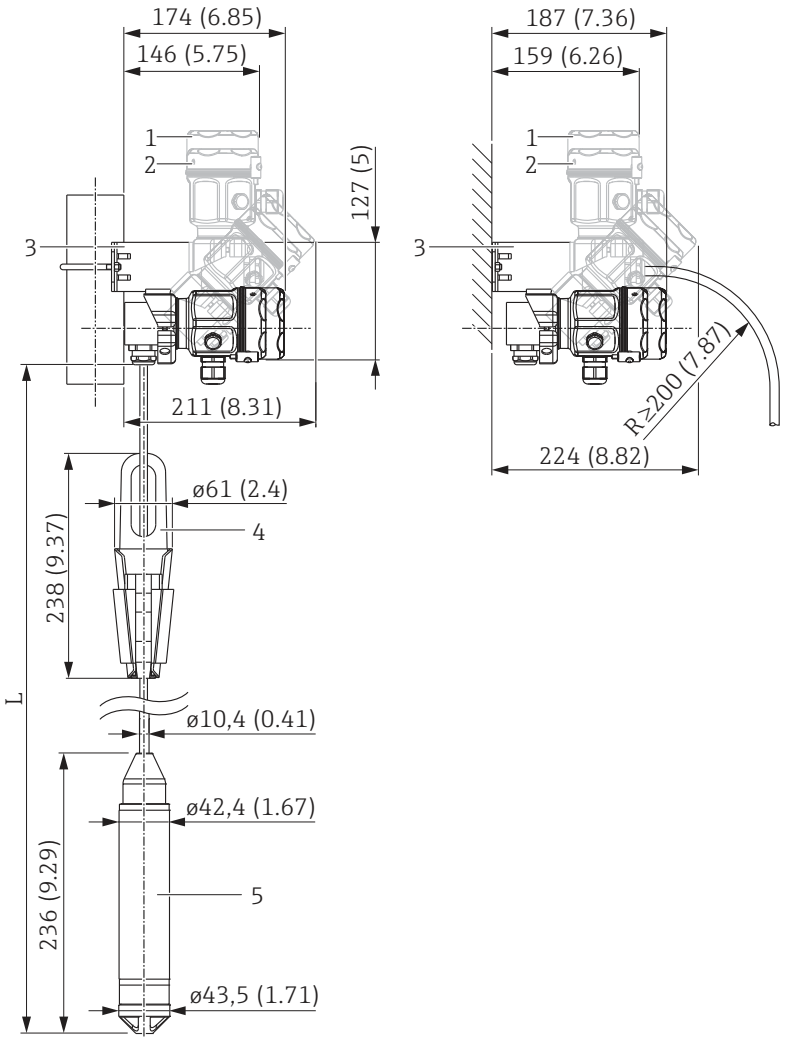

1 Dimensions for housing covers with a viewing window.
2 Housing covers without a viewing window are approx. 15 mm (0.59 in) lower.
3 Mounting bracket for pipe and wall mounting (for pipes from 1 ¼" up to 2" diameter)
4 Suspension clamp
5 Measuring cell tube
L Probe length L = 500 to 300 000 mm (20 to 11 810 in) - see Product Configurator, order code for "Probe connection"

FMB53 with suspension clamp and mounting bracket (mounting bracket without marine approval)
Engineering unit mm (in)

Process connection incl. measuring cell	Weight
Housing weight	→ 🖹 36
PE cable (cable length > 120 m (394 ft) = Delivery on cable reel)	0.13 kg/m (0.28 lbs/3.3 ft)
FEP cable (cable length > 120 m (394 ft) = Delivery on cable reel)	0.18 kg/m (0.40 lbs/3.3 ft)
Mounting bracket	0.2 kg (0.44 lb)
Pipe bend incl. cable entry	0.65 kg (1.43 lb)
Suspension clamp	0.4 kg (0.88 lb)
Measuring cell tube incl. measuring cell	1.0 kg (2.21 lb)
Total weight of device	

Wall and pipe mounting with mounting bracket

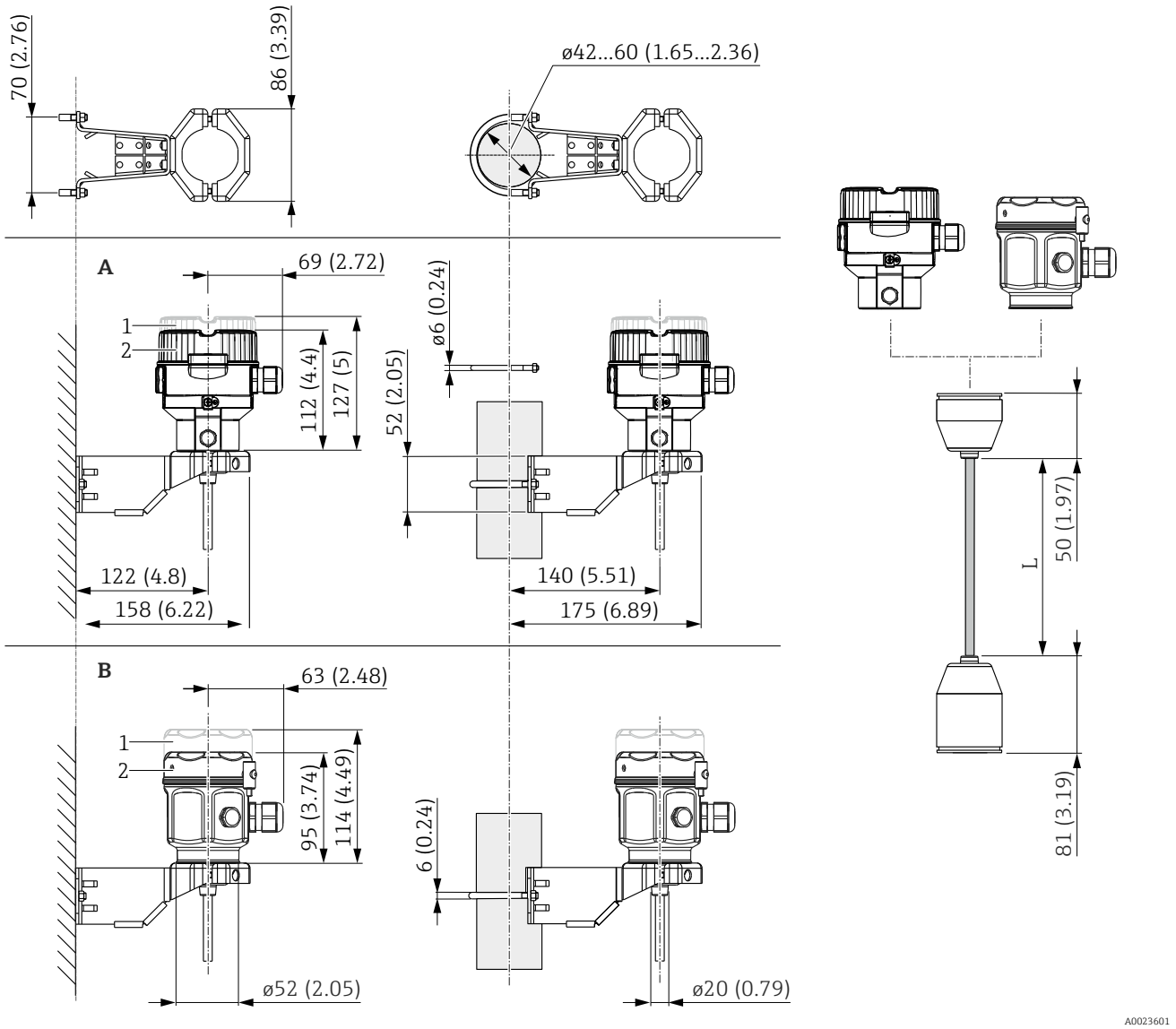

1 Housing cover with viewing window
2 Housing cover without viewing window
L PE: 2 m (6.6 ft), 5 m (16 ft) and 10 m (33 ft), FEP: 5 m (16 ft).
L1 FMB50 = 91 mm (3.58 in); FMB51 and FMB52 = 81 mm (3.19 in)

Engineering unit mm (in)

Item	Designation	Weight (kg (lb))		Option [1]
		Housing (F31 or F15)	Mounting bracket	
A	Dimensions with F31 housing	→ 35	0.5 (1.10)	U
B	Dimensions with F15 housing			

1) Product Configurator, "Separate housing" ordering feature

Also available for order as a separate accessory: Part number 71102216

FMB50: Reduction in installation height

If the separate housing is used, the mounting height of the process connection is reduced compared to the dimensions of the standard version.

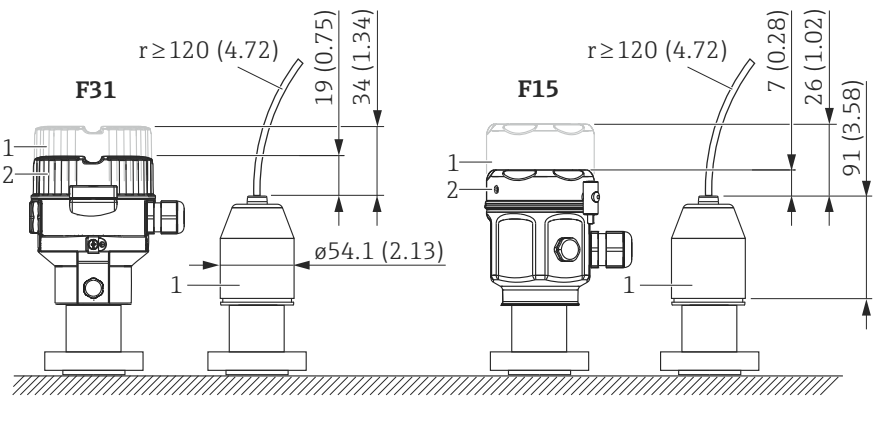

1 Process connection adapter

Engineering unit mm (in)

FMB51, FMB52: Reduction in installation height

If the separate housing is used, the mounting height of the process connection is reduced compared to the dimensions of the standard version.

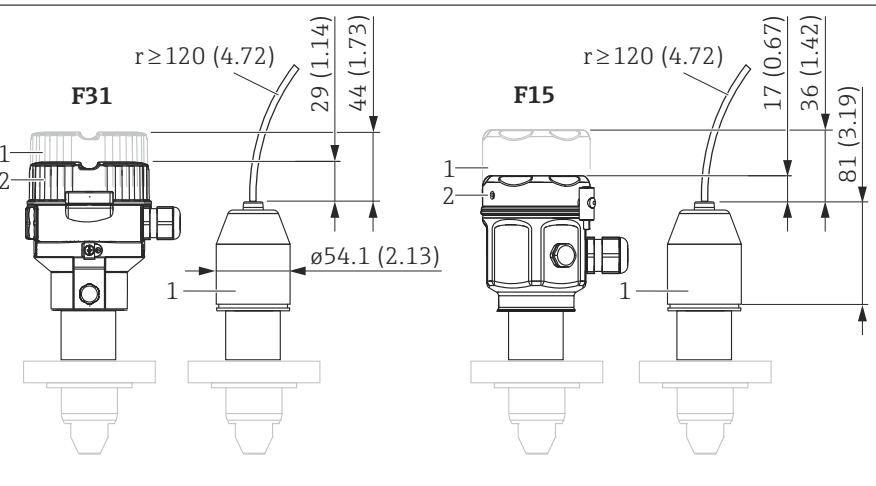

1 Process connection adapter

Engineering unit mm (in)

Example for a "Separate housing version"

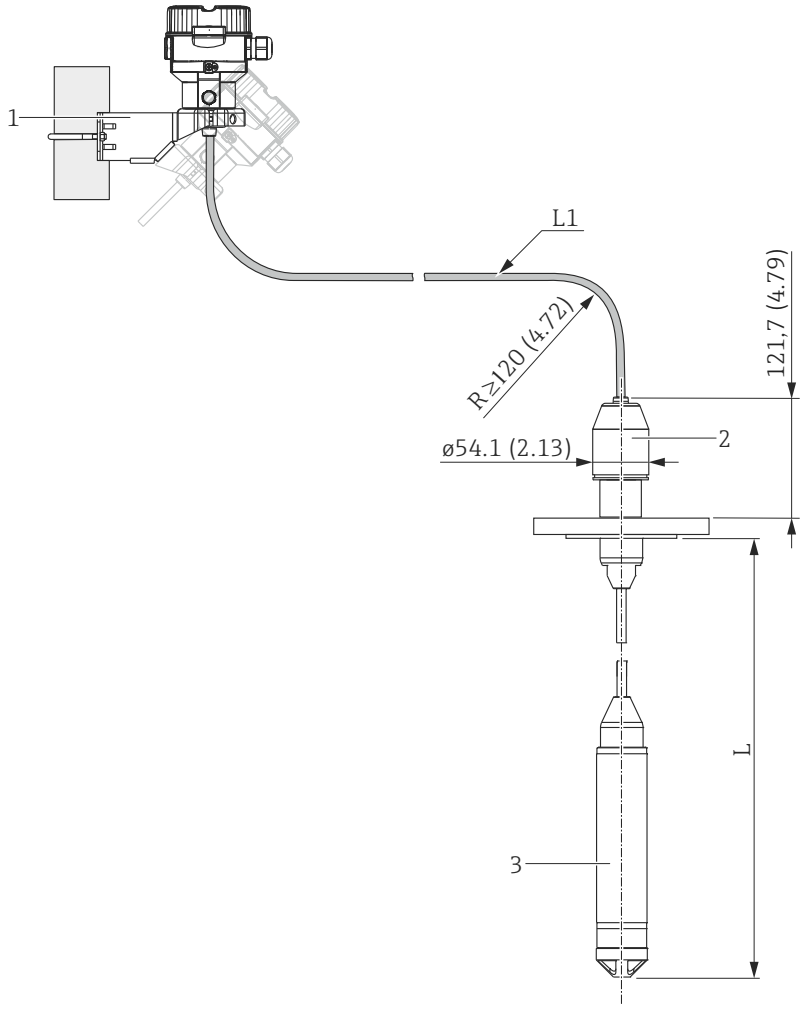

1 Mounting bracket for pipe and wall mounting (for pipes from 1 ¼" up to 2" diameter)
2 Process connection adapter
3 Measuring cell tube
L1 PE: 2 m (6.6 ft), 5 m (16 ft) and 10 m (33 ft); FEP: 5 m (16 ft)
L Probe length = 500 to 300 000 mm (20 to 11 810 in)

Connecting cable with process connection adapter and mounting bracket, depicted here with a FMB52
Engineering unit mm (in)

Process connection incl. measuring cell	Weight
Separate housing for FMB50	Weight of housing → 🖹 35 + 0.5 kg (1.10 lb)
Separate housing for FMB51 and FMB52	Weight of housing → 🖹 35 + 0.65 kg (1.43 lb)
Process connection adapter	0.4 kg (0.88 lb)
Mounting bracket	0.2 kg (0.44 lb)
Pipe bend incl. cable entry	0.65 kg (1.43 lb)
PE cable 2 m (6.6 ft)	0.16 kg (0.35 lb)
PE cable 5 m (16 ft)	0.32 kg (0.71 lb)
Total weight of device	

Ordering information for FMB50, FMB51, FMB52: Product Configurator, order code for "Separate housing".

Materials not in contact with process

F31 housing

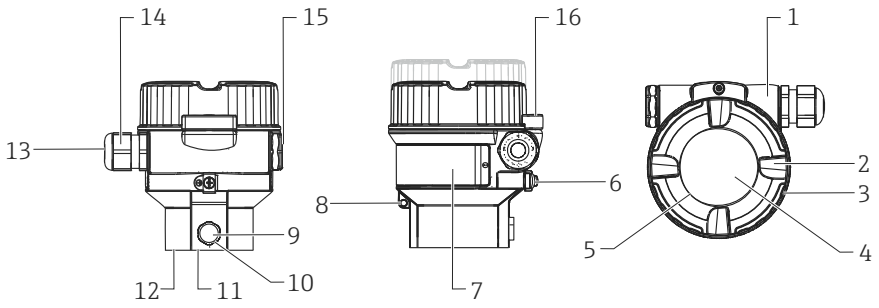

Front view, left-hand side view, top view

Item number	Component	Material
1	F31 housing, RAL 5012 (blue)	Polyester powder coating on aluminum as per EN1706 AC43400 (reduced copper content ≤ 0.1 % to prevent corrosion)
2	Cover, RAL 7035 (gray)	Polyester powder coating on aluminum as per EN1706 AC43400 (reduced copper content ≤ 0.1 % to prevent corrosion)
3	Cover seal	HNBR
4	Sight glass	Mineral glass
5	Sight glass seal	Silicone (VMQ)
6	External ground terminal	AISI 304 (1.4301)
7	Nameplates	Plastic film
8	Fastening for wired-on tag plate	AISI 304 (1.4301)/AISI 316 (1.4401)
9	Pressure compensation filter	AISI 316L (1.4404) and PBT-FR
10	Pressure compensation filter, O-ring	VMQ or EPDM
11	Sealing ring	EPDM
12	Snap ring	PC Plastic
13	Seal of cable gland and plug	EPDM/NBR
14	Cable gland	Polyamide PA, for dust ignition-proof: CuZn nickel-plated
15	Plug	PBT-GF30 FR
		for dust ignition-proof, Ex d, FM XP and CSA XP: AISI 316L (1.4435)
16	Cover clamp	AISI 316L (1.4435) clamp, A4 screw

F15 housing

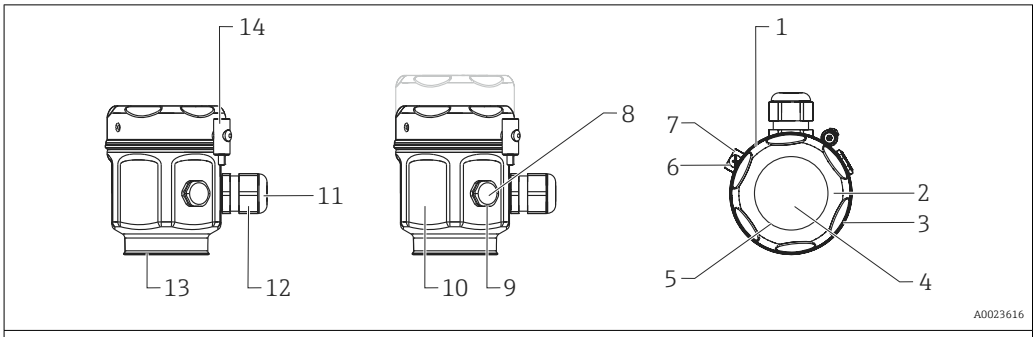

Front view, left-hand side view, top view

Item number	Component	Material
1	F15 housing	AISI 316L (1.4404)
2	Cover	
3	Cover seal	Silicone with PTFE coating
4	Sight glass for non-hazardous area, ATEX Ex ia, NEPSI Zone 0/1 Ex ia, IECEx Zone 0/1 Ex ia, FM NI, FM IS, CSA IS	Polycarbonate (PC)
4	Sight glass for ATEX 1/2 D, ATEX 1/3 D, ATEX 1 GD, ATEX 1/2 GD, ATEX 3 G, FM DIP, CSA dust ignition-proof	Mineral glass
5	Sight glass seal	Silicone (VMQ)
6	External ground terminal	AISI 304 (1.4301)
7	Fastening for wired-on tag plate	AISI 304 (1.4301)/AISI 316 (1.4401)
8	Pressure compensation filter	AISI 316L (1.4404) and PBT-FR
9	Pressure compensation filter, O-ring	VMQ or EPDM
10	Nameplates	Lasered on
11	Cable gland	Polyamide PA, for dust ignition-proof: CuZn nickel-plated
12	Seal of cable gland and plug	NBR/Silicone/EPDM
13	Sealing ring	EPDM
14	Screw	A4-50

Connecting parts

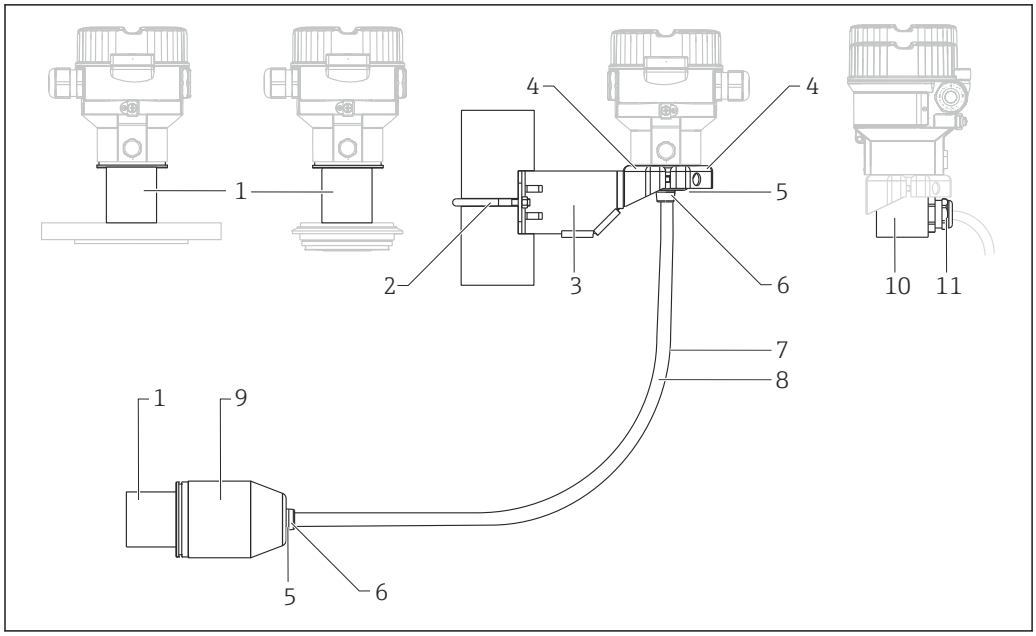

A0023617

Item number	Component	Material
1	Connection between the housing and process connection	AISI 316L (1.4404)
2	Mounting bracket	Bracket AISI 316L (1.4404)
3		Screw and nuts A4-70
4		Half-shells: AISI 316L (1.4404)
5	Seal for cable from separate housing	FKM, EPDM
6	▪ Gland for cable from separate housing: ▪ Screws:	▪ AISI 316L (1.4404) ▪ A2
7	PE cable for separate housing	Abrasion-resistant cable with Dynema strain-relief members; shielded with aluminum-coated film; insulated with polyethylene (PE-LD), black; copper wires, twisted, UV-resistant
8	FEP cable for separate housing	Abrasion-resistant cable; shielded with galvanized steel wire netting; insulated with fluorinated ethylene propylene (FEP), black; copper wires, twisted, UV-resistant
9	Process connection adapter for separate housing	AISI 316L (1.4404)
10	Housing adapter	FMB50, FMB51, FMB52: AISI 316L (1.4404) FMB53: AISI 304 (1.4301)
11	Cable gland: Sealing insert: O-ring:	CuZn nickel-plated TPE-V NBR

Fill fluid

Designation	Option [1]
Inert oil	2
Synthetic oil polyalphaolefin FDA 21 CFR 178.3620, NSF H1	3

1) Product Configurator, order code for "Fill fluid"

Materials in contact with process

NOTICE

- Device components in contact with the process are listed in the "Mechanical construction" → 35 and "Ordering information" → 70 sections.

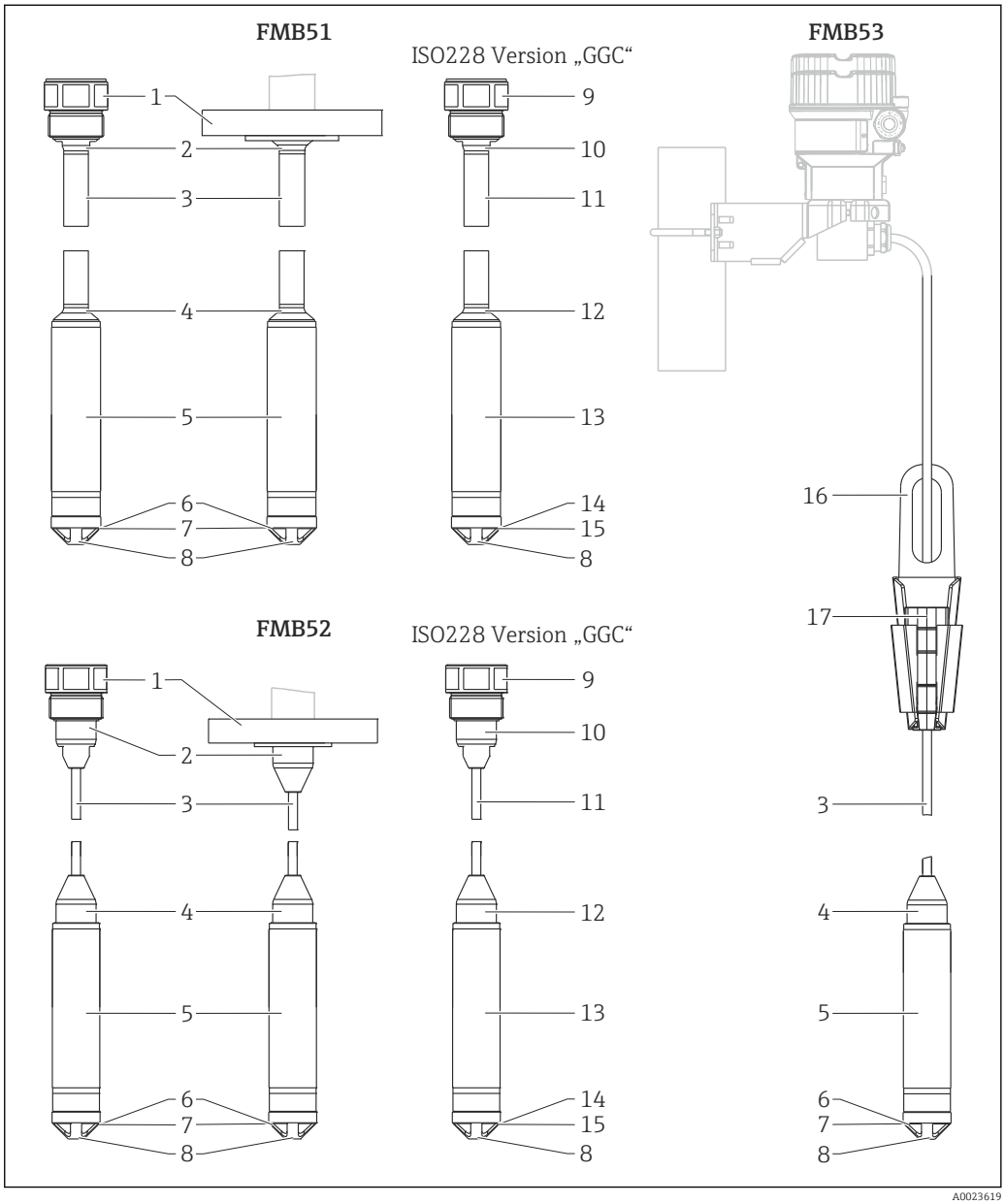

A0023619

Item number	Component	Material
1	Process connection	→ 37
2	Socket	AISI 316L (1.4404)
3	Rod	AISI 316L (1.4404)

Item number	Component	Material
	PE cable	Abrasion-proof cable; shielded using galvanized steel wire netting and aluminum-coated film; insulated with polyethylene (PE-LD), black/blue; copper wires, twisted, UV-resistant
	PE cable (Usage in drinking water)	Abrasion-proof cable; shielded using galvanized steel wire netting and aluminum-coated film; insulated with polyethylene (PE-LD), black; copper wires, twisted, UV-resistant
3	FEP cable	Abrasion-proof cable; shielded using galvanized steel wire netting and aluminum-coated film; insulated with fluorinated ethylene propylene (FEP), black; copper wires, twisted, UV-resistant
4	Socket	AISI 316L (1.4404)
5	Probe tube	AISI 316L (1.4404)
6	Process membrane and meter body	→ 🖹 58
7	Seals	→ 🖹 59
8	Protective cap	POM
9	Process connection	Alloy C276 (2.4819)
10	Socket	Alloy C4 (2.4610)
11	Rod	Alloy C4 (2.4610)
12	Socket	Alloy C4 (2.4610)
13	Probe tube	Alloy C22 (2.4602)
14	Process membrane and meter body	→ 🖹 58
15	Seals	→ 🖹 59
16	Suspension clamp	AISI 316L (1.4404)
17	Clamping jaw	PA-GF

DIN/EN flanges

Endress+Hauser supplies DIN/EN flanges made of stainless steel AISI 316L as per material numbers 1.4435 or 1.4404. With regard to their stability-temperature property, the materials 1.4435 and 1.4404 are grouped together under 13EO in EN 1092-1 Tab. 18. The chemical composition of the two materials can be identical.

Process membrane

Process membrane	Coating	Meter body	FMB50	FMB51	FMB52	Option [1]
Alloy C276 (2.4819)	-	316L (1.4435) oder Alloy C276 (2.4819) [2]	✔	✔	✔	B
Alloy C276 (2.4819)	Gold-rhodium	Alloy C276 (2.4819)	✔	✔	✔	L
Alloy C276 (2.4819)	Gold-platinum	Alloy C276 (2.4819)	–	✔	✔	N

1) Product Configurator, order code for "Membrane material"
2) The material of the meter body corresponds to the material of the process connection.

Process membrane	Coating	Meter body	FMB53	Option [1]
Alloy C276 (2.4819)	-	316L (1.4435)	✔	B
Alloy C276 (2.4819)	Gold-rhodium	Alloy C276 (2.4819)	✔	L
Alloy C276 (2.4819)	Gold-platinum	Alloy C276 (2.4819)	✔	N

1) Product Configurator, order code for "Membrane material"

Seals

Designation	Option [1]
FKM	A [2]
EPDM	J [2]
Kalrez 6375	L [2]
None, welded cell	U

1) Product Configurator, order code for "Seal"
2) Not FMB50

TSE Certificate of Suitability (Transmissible Spongiform Encephalopathy)

The following applies to all device components in contact with the process:

- They do not contain any materials derived from animals.
- No additives or operating materials derived from animals are used in production or processing.

Operability

Operating concept

Operator-oriented menu structure for user-specific tasks

- Commissioning
- Operation
- Diagnosis
- Expert level

Quick and safe commissioning

Guided menus for applications

Reliable operation

- Local operation possible in several languages
- Standardized operation at the device and in the operating tools
- Parameters can be locked/unlocked using the device's write protection switch (not IO-Link), using the device software or via remote control

Efficient diagnostic behavior increases measurement availability

- Remedial measures are integrated in plain text
- Diverse simulation options

Local operation

Local display (optional)

A 4-line liquid crystal display (LCD) is used for display and operation. The local display shows measured values, dialog text as well as fault and notice messages in plain text, thereby supporting the user in every stage of operation. The liquid crystal display of the device can be turned in 90° stages. Depending on the installation position of the device, this makes it easy to operate the device and read the measured values.

Functions:

- 8-digit measured value display, including algebraic sign and decimal point, in relation to the set pressure range.
  - Bar graph for 4 to 20 mA HART as current display
  - Bar graph for IO-Link as current display
  - Bar graph for PROFIBUS PA as graphic display of the standardized value of the AI Block
  - Bar graph for FOUNDATION Fieldbus as graphic display of the transducer output
- Simple and complete menu guidance as parameters are split into several levels and groups
- Each parameter is given a 3-digit ID number for easy navigation.
- Option for configuring the display according to individual requirements and preferences, such as language, alternating display, display of other measured values such as measuring cell temperature, contrast setting
- Comprehensive diagnostic functions (fault and warning message, maximum/minimum indicators, etc.)

Overview

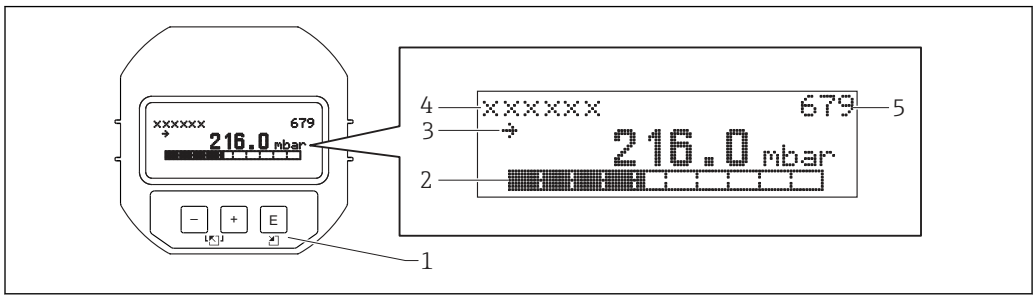

A0016498

1 Operating keys
2 Bar graph
3 Symbol
4 Header
5 Parameter identification number

Ordering information: Product Configurator, order code for "Output, Operation"

Function	Operation via display			
	HART	IO-Link	PROFIBUS PA	FOUNDATION Fieldbus
Position adjustment (zero point correction)	✔	✔	✔	✔
Setting lower range value and upper range value - reference pressure present at the device	✔	✔	✔	✔
Device reset	✔	✔	✔	✔
Locking and unlocking parameters relevant to the measured value	✔	✔	✔	✔
Switching damping on and off	✔	✔	✔	✔

Operating keys and elements located inside on the electronic insert

Function	Operation with operating keys and elements on the electronic insert			
	HART	IO-Link	PROFIBUS PA	FOUNDATION Fieldbus
Position adjustment (zero point correction)	✔	✔	✔	✔
Setting lower range value and upper range value - reference pressure present at the device	✔	✔	–	–
Device reset	✔	✔	✔	✔
Locking and unlocking parameters relevant to the measured value	✔	–	✔	✔
Value acceptance indicated by the green LED	✔	✔	✔	✔
Switching damping on and off	✔	–	✔	✔

Ordering information:

Product Configurator, "Output, Operation" ordering feature

HART

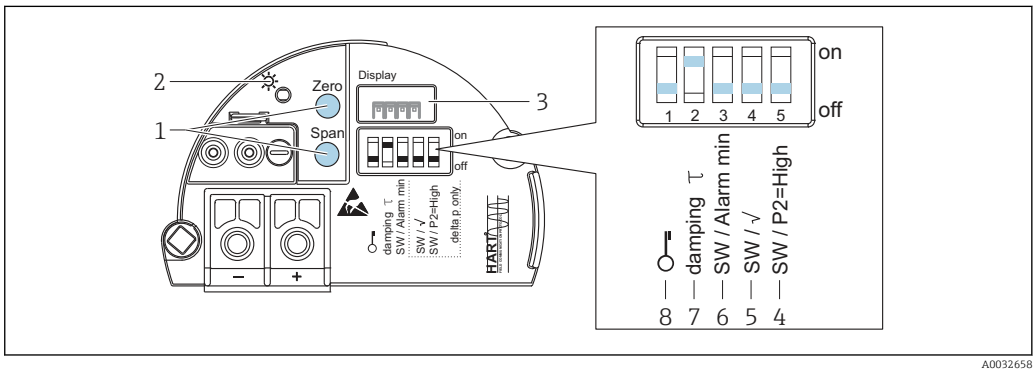

1 Operating keys for lower range value (zero) and upper range value (span)
2 Green LED to indicate successful operation
3 Slot for optional local display
4 DIP switch only for Deltabar M
5 DIP switch only for Deltabar M
6 DIP switch for alarm current SW / Alarm Min (3.6 mA)
7 DIP switch for switching damping on/off
8 DIP switch for locking/unlocking parameters relevant to the measured value

IO-Link

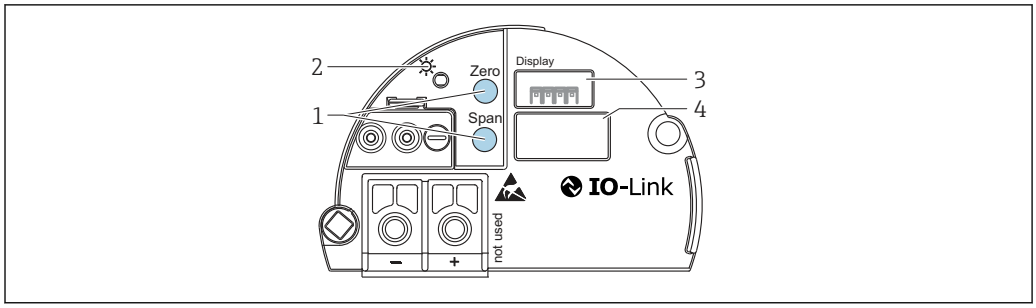

A0045576

1 *Operating keys for lower range value (zero) and upper range value (span)*
2 *Green LED to indicate successful operation*
3 *Slot for optional local display*
4 *Slot for M12 plug*

PROFIBUS PA

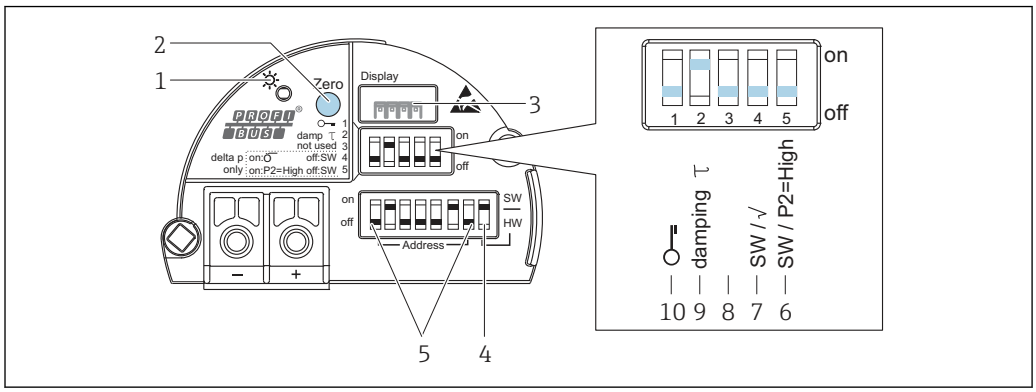

A0032659

1 *Green LED to indicate successful operation*
2 *Operating key for position zero adjustment (Zero) or reset*
3 *Slot for optional local display*
4 *DIP-switch for bus address SW / HW*
5 *DIP-switch for hardware address*
6 *DIP switch only for Deltabar M*
7 *DIP switch only for Deltabar M*
8 *Not used*
9 *DIP switch for switching damping on/off*
10 *DIP switch for locking/unlocking parameters relevant to the measured value*

FOUNDATION Fieldbus

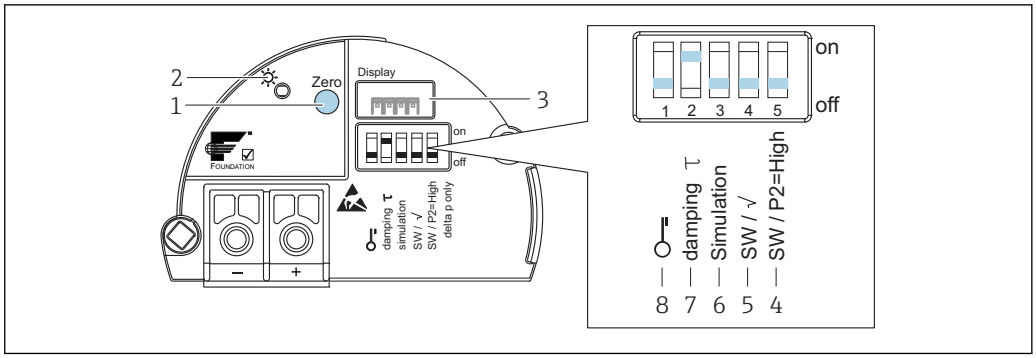

1 Operating key for position zero adjustment (Zero) or reset
2 Green LED to indicate successful operation
3 Slot for optional local display
4 DIP switch only for Deltabar M
5 DIP switch only for Deltabar M
6 DIP-switch for simulation mode
7 DIP switch for switching damping on/off
8 DIP switch for locking/unlocking parameters relevant to the measured value

Operating languages

You can also choose another language in addition to the standard language "English":

Designation	Option [1]
English	AA
German	AB
French	AC
Spanish	AD
Italian	AE
Dutch	AF
Chinese	AK
Japanese	AL

1) Product Configurator "Additional Operation Language" ordering feature

Remote operation

Depending on the position of the write protection switch on the device, all software parameters are accessible.

Hardware and software for remote operation	HART	IO-Link	PROFIBUS PA	FOUNDATION Fieldbus
FieldCare → 🖹 63	✔ [1]	✔ [2]	✔ [3]	✔
FieldXpert SFX100 → 🖹 64	✔	–	–	✔
NI-FBUS Configurator → 🖹 64	–	–	–	✔
Field Xpert SMT70, SMT77→ 🖹 64	✔ [1]	✔ [2]	–	✔

1) Commubox FXA195 required
2) SFP20 required
3) Profiboard or Proficard required

FieldCare

FieldCare is an Endress+Hauser asset management tool based on FDT technology. With FieldCare, you can configure all Endress+Hauser devices as well as devices from other manufacturers that support the FDT standard.

FieldCare supports the following functions:
- Configuration of transmitters in offline and online mode
- Loading and saving of device data (upload/download)
- Documentation of measuring point

Connection options:
- HART via Commubox FXA195 and the USB port of a computer
- IO-Link with FieldPort SFP20 and the USB port of a computer and IO-Link IODD Interpreter DTM
- PROFIBUS PA via segment coupler and PROFIBUS interface card

For further information, please contact your local Endress+Hauser Sales Center.

Field Xpert SFX100

Field Xpert is an industrial PDA with integrated 3.5" touchscreen from Endress+Hauser based on Windows Mobile. It offers wireless communication via the optional VIATOR Bluetooth modem from Endress+Hauser. Field Xpert also works as a stand-alone device for asset management applications. For details, refer to BA00060S/04/EN.

Field Xpert SMT70, SMT77

The Field Xpert SMT70 tablet PC for device configuration enables mobile plant asset management in hazardous (Ex Zone 2) and non-hazardous areas. It is suitable for commissioning and maintenance staff. It manages Endress+Hauser and third-party field instruments with a digital communication interface and documents the progress of the work. The SMT70 is designed as a complete solution. It comes with a pre-installed driver library and is an easy-to-use, touch-enabled tool for managing field devices throughout their entire life cycle.

The Field Xpert SMT77 for device configuration enables mobile plant asset management in areas categorized as Ex Zone 1. It is suitable for commissioning and maintenance staff for easy management of field instruments with a digital communication interface. The touch-enabled tablet PC is designed as a complete solution. It comes with comprehensive pre-installed driver libraries and offers users a modern software user interface to manage field instruments throughout the entire life cycle.

Required tool for IO-Link: "IO-Link IODD Interpreter DTM" on www.endress.com

FieldPort SFP20

The FieldPort SFP20 is a USB interface for the configuration of Endress+Hauser IO-Link devices, and also of devices from other vendors. Combined with the IO-Link CommDTM and the IODD Interpreter, the FieldPort SFP20 complies with the FDT/DTM standards.

Commubox FXA195

For intrinsically safe HART communication with FieldCare via the USB port. For details refer to TI00404F/00/EN.

Profiboard

For connecting a PC to PROFIBUS.

Proficard

For connecting a laptop to PROFIBUS.

FF configuration program

FF configuration program, such as NI-FBUS Configurator, to
- connect devices with "FOUNDATION Fieldbus signal" into an FF-network
- set FF-specific parameters

Remote operation via NI-FBUS Configurator:

The NI-FBUS Configurator is an easy-to-use graphical environment for creating linkages, loops, and a schedule based on the FOUNDATION Fieldbus concept.

You can use the NI-FBUS Configurator to configure a fieldbus network as follows:
- Set block and device tags
- Set device addresses
- Create and edit function block control strategies (function block applications)
- Configure measuring cell-specific parameters

- Create and edit schedules
- Read and write to control systems and control loops
- Invoke methods specified in the manufacturer-specific DD (e.g. basic device settings)
- Display DD menus (e.g. tab for calibration data)
- Download a configuration
- Verify a configuration and compare it to a saved configuration
- Monitor a downloaded configuration
- Replace a virtual device with a real device
- Save and print a configuration

System integration

The device can be given a tag name (max. 8 alphanumeric characters).

Designation	Option [1]
Measuring point (TAG), see additional spec.	Z1
Bus address, see additional spec.	Z2

1) Product Configurator, order code for "Marking"

IO-Link Smart Sensor Profile 2nd Edition

Supports
- Identification
- Diagnosis
- Digital Measuring Sensor (as per SSP 4.3.3)

IO-Link (optional)

Operating concept for devices with IO-Link

- Operator-oriented menu structure for user-specific tasks
- Fast and safe commissioning

Efficient diagnostic behavior increases measurement availability

- Remedial measures
- Simulation options

IO-Link information

IO-Link is a point-to-point connection for communication between the measuring device and an IO-Link master. The measuring device features an IO-Link communication interface type 2 (pin 4) with a second IO function on pin 2. This requires an IO-Link-compatible assembly (IO-Link master) for operation. The IO-Link communication interface enables direct access to the process and diagnostic data. It also provides the option of configuring the measuring device while in operation.

Characteristics of the IO-Link interface:
- IO-Link specification: Version 1.1
- IO-Link Smart Sensor Profile 2nd Edition
- Speed: COM2; 38.4 kBaud
- Minimum cycle time: 10 ms
- Process data width: 14 Byte
- IO-Link data storage: Yes
- Block configuration: Yes
- Device operational: The measuring device is operational 5 seconds after the supply voltage is applied

IO-Link download

http://www.endress.com/download
- Select "Device Driver" from the search options shown
- For "Type", select "IO Device Description (IODD)"
  Select IO-Link (IODD)
  IODD for Deltapilot FMB50
- Under the product root, select the desired device and follow any further instructions.

https://ioddfinder.io-link.com/
Search by
- Manufacturer
- Article number
- Product type

Device Search (IO-Link)

The Device Search parameter is used to uniquely identify the device during installation.

Certificates and approvals

Current certificates and approvals for the product are available at www.endress.com on the relevant product page:

1. Select the product using the filters and search field.
2. Open the product page.
3. Select **Downloads**.

CE mark

The device meets the legal requirements of the relevant EC directives. Endress+Hauser confirms that the device has been successfully tested by applying the CE mark.

RoHS

The measuring system complies with the substance restrictions of the Restriction on Hazardous Substances Directive 2011/65/EU (RoHS 2).

RCM marking

The supplied product or measuring system meets the ACMA (Australian Communications and Media Authority) requirements for network integrity, interoperability, performance characteristics as well as health and safety regulations. Here, especially the regulatory arrangements for electromagnetic compatibility are met. The products bear the RCM marking on the nameplate.

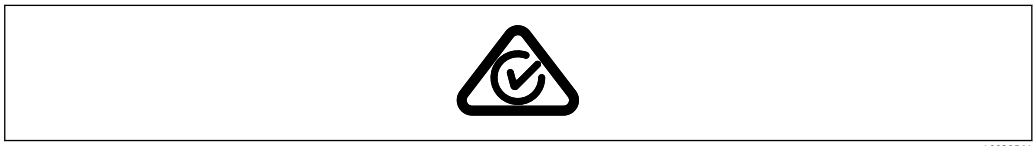

A0029561

Ex approvals

- ATEX
- IECEx
- FM
- CSA
- NEPSI
- Combinations of different approvals also

All explosion protection data are given in separate documentation which is available upon request. The Ex documentation is supplied as standard with all Ex devices .

EAC conformity

The measuring system meets the legal requirements of the applicable EAC guidelines. These are listed in the corresponding EAC Declaration of Conformity along with the standards applied.

The manufacturer confirms successful testing of the device by affixing to it the EAC mark.

Suitable for hygiene applications

For information on installation and approvals, see documentation SD02503F "Hygiene approvals".

For information on 3-A and EHEDG-tested adapters, see documentation TI00426F "Weld-in adapter, process adapter and flanges".

Certificate of current Good Manufacturing Practices (cGMP)

Product Configurator, order code for "Test, Certificate" option "JG"

- The certificate is only available in English
- Materials of construction of product wetted parts
- TSE compliance
- Polishing and surface finish
- Material/ compound compliance table (USP Class VI, FDA conformity)

Certificate of Compliance ASME BPE 2012 (only FMB50)

Ordering information:

Product Configurator, "Additional approval" ordering feature, option "LW"

Functional safety SIL

The Deltapilot M with 4 to 20 mA output signal has been developed to assessed and certified by TÜV NORD CERT as per IEC 61508 Edition 2.0 and IEC 61511. These devices can be used to monitor the process level and pressure up to SIL 2. For a detailed description of the safety functions with Deltapilot M, settings and functional safety data, see the "Functional safety manual - Deltapilot M" SD00347P.

Ordering information:

Product Configurator, "Additional approval" ordering feature, option "LA"

CRN approval

Some device versions have CRN approval. A CRN-approved process connection with a CSA approval must be ordered for a CRN-approved device. These devices are fitted with a separate plate bearing the registration number 0F14101.5.

Ordering information:

Product Configurator, “Process connection” ordering feature and

Product Configurator, "Approval" ordering feature

AD2000

The pressure retaining material 316L (1.4435/1.4404) corresponds to AD2000 - W2/W10.

Pressure Equipment Directive 2014/68/EU (PED)

Pressure equipment with allowable pressure ≤ 200 bar (2 900 psi)

Pressure equipment (with a maximum allowable pressure PS ≤ 200 bar (2 900 psi)) can be classified as pressure accessories in accordance with Pressure Equipment Directive 2014/68/EU. If the maximum allowable pressure is ≤ 200 bar (2 900 psi) and the pressurized volume of the pressure equipment is ≤ 0.1 l, the pressure equipment is subject to the Pressure Equipment Directive (cf. Pressure Equipment Directive 2014/68/EU, Article 4, point 3). The Pressure Equipment Directive only requires that the pressure equipment shall be designed and manufactured in accordance with the "sound engineering practice of a Member State".

Reasons:

- Pressure Equipment Directive (PED) 2014/68/EU Article 4, point 3
- Pressure Equipment Directive 2014/68/EU, Commission´s Working Group "Pressure", Guideline A-05 + A-06

Note:

A partial examination shall be performed for pressure instruments that are part of safety equipment for the protection of a pipe or vessel from exceeding allowable limits (safety accessory in accordance with Pressure Equipment Directive 2014/68/EU, Article 2, point 4).

Classification of process sealing between electrical systems and (flammable or combustible) process fluids in accordance with ANSI/ ISA 12.27.01

Endress+Hauser instruments are designed according to ANSI/ISA 12.27.01 either as single seal or dual seal devices with annunciation, allowing the user to waive the use and save the cost of installing external secondary process seals in the conduit as required by the process sealing sections of ANSI/ NFPA 70 (NEC) and CSA 22.1 (CEC). These instruments comply with the North-American installation practice and provide a very safe and cost-saving installation for pressurized applications with hazardous fluids.

Further information can be found in the control drawings of the relevant devices.

Inspection certificate

Designation	FMB50	FMB51	FMB52	FMB53	Option [1]
3.1 Material documentation, wetted metal parts, EN10204-3.1 inspection certificate	✔	✔	✔	✔	JA [2]
Declaration of Conformity NACE MR0175, wetted metal parts	✔	✔	✔	✔	JB [2]
Declaration of Conformity NACE MR0103, wetted metal parts	✔	✔	✔	✔	JE [2]
Conformity to AD2000, wetted metallic parts, excepting process membrane	✔	—	—	—	JF
Surface finish measurement ISO4287/Ra, wetted metal parts, inspection certificate	✔	—	—	—	KB
Helium leak test, internal procedure, inspection certificate	✔	✔	✔	✔	KD
Pressure test, internal procedure, inspection certificate	✔	✔	✔	—	KE

Designation	FMB50	FMB51	FMB52	FMB53	Option [1]
3.1 Material certificate+delta ferrite measurement, internal procedure, wetted metallic parts, EN10204-3.1 inspection certificate	✔	—	—	—	KF
3.1 Material certificate+PMI test (XRF), internal procedure, wetted metallic parts, EN10204-3.1 inspection certificate	✔	✔	✔	✔	KG

1) Product Configurator, order code for "Test, Certificate"
2) The selection of this feature for coated process membranes/process connections refers to the metallic base material.

Ordering information

Detailed ordering information is available as follows:
- In the Product Configurator on the Endress+Hauser website:www.endress.com → Click "Corporate" → Select your country → Click "Products" → Select the product using the filters and search field → Open product page → The "Configure" button to the right of the product image opens the Product Configurator.
- From your Endress+Hauser Sales Center:www.addresses.endress.com

Product Configurator - the tool for individual product configuration
- Up-to-the-minute configuration data
- Depending on the device: direct input of information specific to the measuring point, such as measuring range or operating language
- Automatic verification of exclusion criteria
- Automatic generation of the order code with its breakdown in PDF or Excel output format
- Ability to order directly in the Endress+Hauser Online Shop

Special device versions

Endress+Hauser offers special device versions as **T**echnical **S**pecial **P**roducts (TSP).

For further information please contact your local Endress+Hauser Sales Center.

Scope of delivery

- Device
- Optional accessories
- Brief Operating Instruction
- Calibration certificates
- Optional certificates

Measuring point (TAG)

Order code for	895: Marking
Option	Z1: Tagging (TAG), see additional spec.
Location of measuring point identification	To be selected in the additional specification: ▪ Tie-on label, stainless steel ▪ Adhesive paper label ▪ Label provided ▪ RFID TAG ▪ RFID TAG + tie-on label, stainless steel ▪ RFID TAG + adhesive paper label ▪ RFID TAG + label provided
Definition of measuring point identification	To be specified in additional specification: 3 lines each with a maximum of 18 characters The measuring point designation appears on the selected label and/or the RFID TAG.
Identification on electronic nameplate (ENP)	32 characters
Identification on display module	10 characters

Configuration data sheet

IO-Link: The following data can only be selected for cyclic data and not for acyclic data.

Pressure

If the option "J" was selected for the order code for "Calibration; Unit" in the Product Configurator, the following configuration data sheet must be completed and included with the order.

Pressure unit			
❑ mbar	❑ mmH_2O	❑ mmHg	❑ Pa
❑ bar	❑ mH_2O	❑ kgf/cm^2	❑ kPa
❑ psi	❑ ftH_2O		❑ MPa
	❑ inH_2O		

Calibration range / output		
Lower range value (LRV):	_____	[Pressure unit]
Upper range value (URV):	_____	[Pressure unit]

Display	
1st Value Display [1]	2nd Value Display [1]
❑ Main value	❑ None (Default) ❑ Main Value [%] ❑ Pressure ❑ Current [mA] (HART only) ❑ Temperature

1) (Depending on measuring cell and communication version)

Damping		
Damping:	_____	sec (Default 2 sec)

Smallest calibratable span (preset at factory) → 🖹 10

Level

If the option "K" was selected for the order code for "Calibration; Unit" in the Product Configurator, the following configuration data sheet must be completed and included with the order.

Pressure unit

❑ mbar	❑ mmH_2O	❑ mmHg	❑ Pa
❑ bar	❑ mH_2O	❑ kgf/cm^2	❑ kPa
❑ psi	❑ ftH_2O		❑ MPa
	❑ inH_2O		

Output unit (scaled unit)

Mass	Lengths	Volume	Volume	Percent
❑ kg	❑ m	❑ l	❑ gal	❑ %
❑ t	❑ dm	❑ hl	❑ Igal	
❑ lb	❑ cm	❑ m^3		
	❑ mm	❑ ft^3		
	❑ ft	❑ in^3		
	❑ inch			

Empty pressure [a]: Low pressure value (empty) _____ [Pressure engineering unit]

Empty calibration [a]: Low level value (empty) _____ [Scaled unit]

Full pressure [b]: High pressure value (full) _____ [Pressure engineering unit]

Full calibration [b]: High level value (full) _____ [Scaled unit]

Example

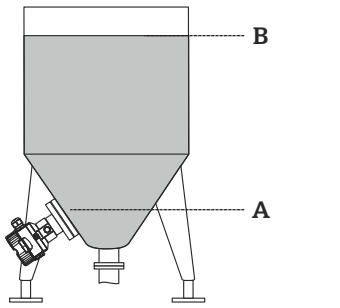

A 0 mbar / 0m
B 300 mbar (4.5 psi) / 3 m (9.8 ft)

Display

1st Value Display [1)]

❑ Main value

2nd Value Display

❑ None (Default)
❑ Main Value [%]
❑ Pressure
❑ Current [mA] (HART only)
❑ Temperature

1) (Depending on measuring cell and communication version)

Damping

Damping: _____ sec (Default 2 sec)

Supplementary documentation

For an overview of the scope of the associated Technical Documentation, refer to the following:
- *Device Viewer* (www.endress.com/deviceviewer): Enter the serial number from the nameplate
- *Endress+Hauser Operations App*: Enter the serial number from the nameplate or scan the 2D matrix code (QR code) on the nameplate

Standard documentation

- Technical Information: planning guide
  The document contains all the technical data on the device and provides an overview of the accessories and other products that can be ordered for the device
- Brief Operating Instructions: takes you quickly to the 1st measured value
  The Brief Operating Instructions contain all the essential information from incoming acceptance to initial commissioning
- Operating Instructions: reference manual
  The Operating Instructions contain all the information that is required in the various phases of the life cycle of the device: from product identification, incoming acceptance and storage, to mounting, connection, operation and commissioning through to troubleshooting, maintenance and disposal

Supplementary device-dependent documentation

Additional documents are supplied depending on the device version ordered: Always comply strictly with the instructions in the supplementary documentation. The supplementary documentation is an integral part of the device documentation.

Field of Activities

Pressure measurement, powerful instruments for process pressure, differential pressure, level and flow:

FA00004P/00/EN

Safety instructions

See Download area of the website.

Special Documentation

Document SD01553P

Mechanical accessories for pressure measuring devices

The documentation provides an overview of available manifolds, oval flange adapters, pressure gauge valves, shutoff valves, siphons, condensate pots, cable shortening kits, test adapters, flushing rings, block-and-bleed valves and protective roofs.

Accessories

Weld-in adapter, Process adapter and Flanges

See technical information TI00426F/00.

Mounting bracket for wall and pipe mounting

→ 🖹 29

Suspension clamp (FMB53 only)

→ 🖹 29

Extension cable shortening kit (FMB53 only)

See Product Configurator, "Accessory enclosed" ordering feature, option "PW" or can be ordered as a separate accessory (part no. 71125862).

For details refer to SD00553P/00/A2.

M12 connector

→ 🖹 21

Adapter Uni for FMB50

For dimensions and technical data, see Technical Information TI00426F.

Designation	FMB50	FMB51	FMB52	FMB53	Option [1]
Weld-in adapter G1-1/2, 316L	✔	✔	✔	-	QJ
Weld-in tool adapter Uni D65/D85, Brass	✔	-	-	-	Q1
Weld-in adapter Uni D85, 316L	✔	-	-	-	Q2
Weld-in adapter Uni D85, 316L, 3.1 EN10204-3.1 material, inspection certificate	✔	-	-	-	Q3
Weld-in adapter Uni 6" D85, 316L	✔	-	-	-	Q5
Weld-in adapter Uni 6" D85, 316L, 3.1 EN10204-3.1 material, inspection certificate	✔	-	-	-	Q6
Welding jig adapter Uni 6" D85, brass	✔	-	-	-	Q7
Weld-in adapter G1-1/2, 316L, 3.1 EN10204-3.1 material, inspection certificate	✔	✔	✔	-	QK
Weld-in tool adapter G1-1/2, Brass	✔	✔	✔	-	QL
Weld-in flange DRD DN50 65mm, 316L	✔	-	-	-	QP
Weld-in fl. DRD DN50 65mm, 316L 3.1 EN10204-3.1 material, inspection certificate	✔	-	-	-	QR
Weld-in tool flange DRD DN50 65mm, Brass	✔	-	-	-	QS
Weld-in adapter Uni D65, 316L	✔	-	-	-	QT
Weld-in adapter Uni D65, 316L, 3.1 EN10204-3.1 material, inspection certificate	✔	-	-	-	QU
Adapter Uni > DIN11851 DN40, 316L, 3.1, slotted-nut, EN10204-3.1 material, inspection certificate	✔	-	-	-	R1
Adapter Uni > DIN11851 DN50, 316L, 3.1, slotted-nut, EN10204-3.1 material, inspection certificate	✔	-	-	-	R2
Adapter Uni > DRD DN50 65mm, 316L, 3.1 EN10204-3.1 material, inspection certificate	✔	-	-	-	R3
Adapter Uni > Clamp 2", 316L, 3.1 EN10204-3.1 material, inspection certificate	✔	-	-	-	R4
Adapter Uni > Clamp 3", 316L, 3.1 EN10204-3.1 material, inspection certificate	✔	-	-	-	R5
Adapter Uni > Varivent, 316L, 3.1 EN10204-3.1 material, inspection certificate	✔	-	-	-	R6
Adapter Uni > DIN11851 DN40, 316L, slotted-nut	✔	-	-	-	RA

Designation	FMB50	FMB51	FMB52	FMB53	Option [1]
Adapter Uni > DIN11851 DN50, 316L, slotted-nut	✔	-	-	-	RB
Adapter Uni > DRD DN50 65mm, 316L	✔	-	-	-	RC
Adapter Uni > Clamp 2", 316L	✔	-	-	-	RD
Adapter Uni > Clamp 3", 316L	✔	-	-	-	RE
Adapter Uni > Varivent N, 316L	✔	-	-	-	RF

1) Product Configurator, "Enclosed accessories" section

Service-specific accessories

Accessories	Description
DeviceCare SFE100	Configuration tool for HART, PROFIBUS and FOUNDATION Fieldbus field devices Technical Information TI01134S DeviceCare is available for download at www.software-products.endress.com. You need to register in the Endress+Hauser software portal to download the application.
FieldCare SFE500	FDT-based plant asset management tool FieldCare can configure all smart field units in your plant and helps you manage them. By using the status information, FieldCare is also a simple but effective way of checking the status and condition of the field devices. Technical Information TI00028S
FieldPort SFP20	**Mobile configuration tool for all IO-Link devices:** ▪ Pre-installed device and CommDTMs in FieldCare ▪ Pre-installed device and CommDTMs in FieldXpert ▪ M12 connection for IO-Link field devices
Field Xpert SMT70, SMT77	The Field Xpert SMT70 tablet PC for device configuration enables mobile plant asset management in hazardous (Ex Zone 2) and non-hazardous areas. It is suitable for commissioning and maintenance staff. It manages Endress+Hauser and third-party field instruments with a digital communication interface and documents the progress of the work. The SMT70 is designed as a complete solution. It comes with a pre-installed driver library and is an easy-to-use, touch-enabled tool for managing field devices throughout their entire life cycle. The Field Xpert SMT77 for device configuration enables mobile plant asset management in areas categorized as Ex Zone 1. It is suitable for commissioning and maintenance staff for easy management of field instruments with a digital communication interface. The touch-enabled tablet PC is designed as a complete solution. It comes with comprehensive pre-installed driver libraries and offers users a modern software user interface to manage field instruments throughout the entire life cycle.

Registered trademarks

- KALREZ®
  Registered label of E.I. Du Pont de Nemours & Co., Wilmington, USA
- TRI-CLAMP®
  Registered label of Ladish & Co., Inc., Kenosha, USA
- HART®
  Registered trademark of the FieldComm Group, Austin, USA
- IO-Link
  Registered trademark of the IO-Link Community.
- PROFIBUS PA®
  Trademark of the PROFIBUS User Organization, Karlsruhe, Germany
- FOUNDATION™ Fieldbus
  Registered trademark of the FieldComm Group, Austin, USA
- GORE-TEX® trademark of W.L. Gore & Associates, Inc., USA



www.addresses.endress.com

Endress+Hauser

People for Process Automation