BA00191R/09/EN/16.23-00
71625410
2023-01-31

Valid as of version
03.01.zz (device version)

Operating Instructions
iTEMP TMT142B

Temperature transmitter
with HART® protocol



Endress+Hauser
People for Process Automation

Table of contents

1 About this document 4
1.1 Document function 4
1.2 Safety Instructions (XA) 4
1.3 Used symbols 4
1.4 Tool symbols 6
1.5 Documentation 6
1.6 Registered trademarks 7

2 Safety instructions 8
2.1 Requirements for personnel 8
2.2 Designated use 8
2.3 Workplace safety 8
2.4 Operational safety 8
2.5 Device-specific IT security 9

3 Incoming acceptance and product identification 10
3.1 Incoming acceptance 10
3.2 Product identification 10
3.3 Certificates and approvals 11
3.4 Storage and transport 11

4 Mounting 12
4.1 Mounting requirements 12
4.2 Mounting the transmitter 12
4.3 Display mounting 14
4.4 Post-installation check 14

5 Electrical connection 15
5.1 Connecting requirements 15
5.2 Connecting the sensor 16
5.3 Connecting the measuring device 16
5.4 Special connection instructions 18
5.5 Ensuring the degree of protection 20
5.6 Post-connection check 20

6 Operation options 21
6.1 Overview of operation options 21
6.2 Structure and function of the operating menu 24
6.3 Access to the operating menu via the operating tool 26
6.4 Access to the operating menu via the SmartBlue App 29

7 System integration 31
7.1 Overview of device description files 31
7.2 Measured variables via HART protocol 31
7.3 Supported HART® commands 31

8 Commissioning 34
8.1 Post-installation check 34
8.2 Switching on the transmitter 34
8.3 Configuring the measuring device 34

9 Diagnostics and troubleshooting . . . 37
9.1 General troubleshooting 37
9.2 Diagnostic information on local display 39
9.3 Diagnostic information via communication interface 39
9.4 Diagnostic list 39
9.5 Event logbook 39
9.6 Overview of diagnostic events 40
9.7 Firmware history 41

10 Maintenance and cleaning 42

11 Repair 42
11.1 General information 42
11.2 Spare parts 42
11.3 Return 44
11.4 Disposal 44

12 Accessories 44
12.1 Device-specific accessories 44
12.2 Communication-specific accessories 45
12.3 Service-specific accessories 45
12.4 System products 46

13 Technical data 47
13.1 Input 47
13.2 Output 48
13.3 Power supply 49
13.4 Performance characteristics 50
13.5 Environment 57
13.6 Mechanical construction 58
13.7 Certificates and approvals 59
13.8 Supplementary documentation 60

14 Operating menu and parameter description 61
14.1 Menu: Diagnostics 65
14.2 Menu: Application 73
14.3 Menu: System 83

Index 98

1 About this document

1.1 Document function

These Operating Instructions contain all the information required in the various life cycle phases of the device: from product identification, incoming acceptance and storage, to installation, connection, operation and commissioning, through to troubleshooting, maintenance and disposal.

1.2 Safety Instructions (XA)

When using in hazardous areas, compliance with national regulations is mandatory. Separate Ex-specific documentation is provided for measuring systems that are used in hazardous areas. This documentation is an integral part of these Operating Instructions. The installation specifications, connection data and safety instructions it contains must be strictly observed! Make sure that you use the right Ex-specific documentation for the right device with approval for use in hazardous areas! The number of the specific Ex documentation (XA...) is provided on the nameplate. If the two numbers (on the Ex documentation and the nameplate) are identical, then you may use this Ex-specific documentation.

1.3 Used symbols

1.3.1 Safety symbols

⚠ DANGER
This symbol alerts you to a dangerous situation. Failure to avoid this situation will result in serious or fatal injury.

⚠ WARNING
This symbol alerts you to a dangerous situation. Failure to avoid this situation can result in serious or fatal injury.

⚠ CAUTION
This symbol alerts you to a dangerous situation. Failure to avoid this situation can result in minor or medium injury.

NOTICE
This symbol contains information on procedures and other facts which do not result in personal injury.

1.3.2 Electrical symbols

Symbol	Meaning
⎓	Direct current
~	Alternating current
⎓ ~	Direct current and alternating current

Symbol	Meaning
	Ground connection A grounded terminal which, as far as the operator is concerned, is grounded via a grounding system.
	Potential equalization connection (PE: protective earth) Ground terminals that must be connected to ground prior to establishing any other connections. The ground terminals are located on the interior and exterior of the device: ▪ Interior ground terminal: potential equalization is connected to the supply network. ▪ Exterior ground terminal: device is connected to the plant grounding system.

1.3.3 Symbols for certain types of information

Symbol	Meaning
	Permitted Procedures, processes or actions that are permitted.
	Preferred Procedures, processes or actions that are preferred.
	Forbidden Procedures, processes or actions that are forbidden.
	Tip Indicates additional information.
	Reference to documentation
	Reference to page
	Reference to graphic
	Notice or individual step to be observed
1., 2., 3...	Series of steps
	Result of a step
	Help in the event of a problem
	Visual inspection

1.3.4 Symbols in graphics

Symbol	Meaning	Symbol	Meaning
1, 2, 3,...	Item numbers	1., 2., 3...	Series of steps
A, B, C, ...	Views	A-A, B-B, C-C, ...	Sections
EX	Hazardous area	EX	Safe area (non-hazardous area)

1.4 Tool symbols

Symbol	Meaning
 A0011220	Flat blade screwdriver
 A0011219	Phillips head screwdriver
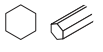 A0011221	Allen key
 A0011222	Open-ended wrench

1.5 Documentation

For an overview of the scope of the associated Technical Documentation, refer to the following:

- *Device Viewer* (www.endress.com/deviceviewer): Enter the serial number from the nameplate
- *Endress+Hauser Operations app*: Enter serial number from nameplate or scan matrix code on nameplate.

1.5.1 Document function

The following documentation may be available depending on the version ordered:

Document type	Purpose and content of the document
Technical Information (TI)	**Planning aid for your device** The document contains all the technical data on the device and provides an overview of the accessories and other products that can be ordered for the device.
Brief Operating Instructions (KA)	**Guide that takes you quickly to the 1st measured value** The Brief Operating Instructions contain all the essential information from incoming acceptance to initial commissioning.
Operating Instructions (BA)	**Your reference document** The Operating Instructions contain all the information that is required in the various phases of the life cycle of the device: from product identification, incoming acceptance and storage, to mounting, connection, operation and commissioning through to troubleshooting, maintenance and disposal.
Description of Device Parameters (GP)	**Reference for your parameters** The document provides a detailed explanation of each individual parameter. The description is aimed at those who work with the device over the entire life cycle and perform specific configurations.
Safety Instructions (XA)	Depending on the approval, safety instructions for electrical equipment in hazardous areas are also supplied with the device. The Safety Instructions are an integral part of the Operating Instructions. Information on the Safety Instructions (XA) relevant to the device is provided on the nameplate.
Supplementary device-dependent documentation (SD/FY)	Always comply strictly with the instructions in the relevant supplementary documentation. The supplementary documentation is an integral part of the device documentation.

1.6 Registered trademarks

HART®
Registered trademark of the FieldComm Group, Austin, Texas, USA

Bluetooth®
The *Bluetooth*® word mark and logos are registered trademarks owned by the Bluetooth SIG, Inc. and any use of such marks by Endress+Hauser is under license. Other trademarks and trade names are those of their respective owners.

2 Safety instructions

2.1 Requirements for personnel

The personnel for installation, commissioning, diagnostics and maintenance must fulfill the following requirements:
- Trained, qualified specialists must have a relevant qualification for this specific function and task.
- Personnel must be authorized by the plant owner/operator.
- Be familiar with federal/national regulations.
- Before starting work: personnel must read and understand the instructions in the manual and supplementary documentation as well as the certificates (depending on the application).
- Personnel must follow instructions and comply with general policies.

The operating personnel must fulfill the following requirements:
- Personnel are instructed and authorized according to the requirements of the task by the facility's owner-operator.
- Personnel follow the instructions in this manual.

2.2 Designated use

The device is a universal and user-configurable temperature transmitter with one sensor input for a resistance thermometer (RTD), thermocouples (TC), resistance and voltage transmitters. The device is designed for installation in the field.

If the device is used in a manner not specified by the manufacturer, the protection provided by the device may be impaired.

The manufacturer is not liable for damage caused by improper or non-designated use.

2.3 Workplace safety

When working on and with the device:
- Wear the required personal protective equipment as per national regulations.

2.4 Operational safety

- Operate the device only if it is in proper technical condition, free from errors and faults.
- The operator is responsible for interference-free operation of the device.

Hazardous area

To eliminate a danger for persons or for the facility when the device is used in the hazardous area (e.g. explosion protection or safety equipment):
- Based on the technical data on the nameplate, check whether the ordered device is permitted for the intended use in the hazardous area. The nameplate can be found on the side of the transmitter housing.
- Observe the specifications in the separate supplementary documentation that is an integral part of this manual.

Electromagnetic compatibility

The measuring system complies with the general safety requirements and EMC requirements as per the IEC/EN 61326 series and NAMUR recommendation NE 21.

NOTICE
- The device may only be powered by a power unit with an energy-limited circuit in accordance with UL/EN/IEC 61010-1, Section 9.4 and the requirements of Table 18.

2.5 Device-specific IT security

The device offers a range of specific functions to support protective measures on the operator's side. These functions can be configured by the user and guarantee greater in-operation safety if used correctly. An overview of the most important functions is provided in the following section.

Function/interface	Factory setting	Recommendation
Write protection via hardware DIP switch → 🖹 22	Not enabled	On an individual basis following risk assessment
User management in the device → 🖹 24 For detailed information, see the Operating Instructions for the device	Maintenance	Assign a customized access code during commissioning
Software locking via access code with the Bluetooth® App→ 🖹 29	User name: admin Initial password: serial number of the device	Assign a customized access code during commissioning
Set the Bluetooth® interface via hardware DIP switch → 🖹 22	Bluetooth® interface active	On an individual basis following risk assessment
Set Bluetooth® communication via device configuration → 🖹 89 For detailed information, see the Operating Instructions for the device	Bluetooth® interface active	On an individual basis following risk assessment

3 Incoming acceptance and product identification

3.1 Incoming acceptance

Proceed as follows on receipt of the device:

1. Check whether the packaging is intact.
2. If damage is discovered:
   Report all damage immediately to the manufacturer.
3. Do not install damaged components, as the manufacturer cannot otherwise guarantee the material resistance or compliance with the original safety requirements, and can also not be held responsible for the consequences that may result.
4. Compare the scope of delivery against the contents of your order.
5. Remove all the packaging material used for transportation.
6. Do the data on the nameplate match the ordering information on the delivery note?
7. Are the technical documentation and all other necessary documents provided, e.g. certificates?

If one of the conditions is not satisfied, contact your Sales Center.

3.2 Product identification

The following options are available for identification of the device:
- Nameplate specifications
- Enter the serial number from the nameplate in the *Device Viewer* (www.endress.com/deviceviewer): all the information about the device and an overview of the Technical Documentation supplied with the device are displayed.
- Enter the serial number on the nameplate into the *Endress+Hauser Operations App* or scan the 2-D matrix code (QR code) on the nameplate with the *Endress+Hauser Operations App*: all the information about the device and the technical documentation pertaining to the device is displayed.

3.2.1 Nameplate

The right device?

The nameplate provides you with the following information on the device:
- Manufacturer identification, device designation
- Order code
- Extended order code
- Serial number
- Tag name (TAG)
- Technical values: supply voltage, current consumption, ambient temperature, communication-specific data (optional)
- Degree of protection
- Approvals with symbols

▶ Compare the information on the nameplate with the order.

3.2.2 Name and address of manufacturer

Name of manufacturer:	Endress+Hauser Wetzer GmbH + Co. KG
Address of manufacturer:	Obere Wank 1, D-87484 Nesselwang or www.endress.com

3.3 Certificates and approvals

For certificates and approvals valid for the device: see the data on the nameplate

Approval-related data and documents: www.endress.com/deviceviewer → (enter the serial number)

3.3.1 HART® protocol certification

The temperature transmitter is registered by the HART® Field Comm Group. The device meets the requirements of the HART® Communication Protocol Specifications, Revision 7.

3.4 Storage and transport

Storage temperature
- Without display: −50 to +100 °C (−58 to +212 °F)
- With display: −40 to +80 °C (−40 to +176 °F)
- With overvoltage protection module: −40 to +85 °C (−40 to +185 °F)

Maximum relative humidity: < 95 % as per IEC 60068-2-30

Pack the device for storage and transportation in such a way that it is reliably protected against impact and external influences. The original packaging offers the best protection.

Avoid the following environmental influences during storage:
- Direct sunlight
- Proximity to hot objects
- Mechanical vibration
- Aggressive media

4 Mounting

4.1 Mounting requirements

4.1.1 Dimensions

Dimensions of the device see technical data.→ 58

4.1.2 Mounting location

Detailed information about the conditions (such as the ambient temperature, degree of protection, climate class etc.) that must be present at the installation point so that the device can be mounted correctly is provided in the technical data section. → 57

When using in hazardous areas, the limit values of the certificates and approvals must be observed, please see Ex certificates.

4.2 Mounting the transmitter

4.2.1 Direct sensor mounting

If the sensor is stable, the device can be fitted directly on the sensor. If the sensor is to be mounted at a right angle to the cable gland, swap the dummy plug and cable gland.

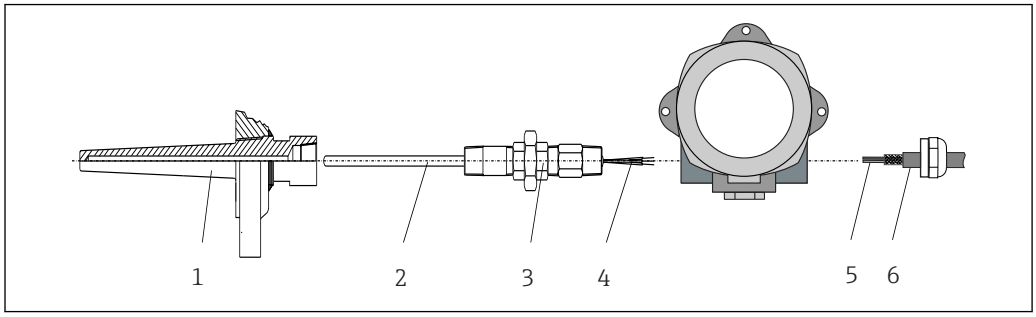

1 Direct field transmitter mounting on sensor

1 Thermowell
2 Insert
3 Neck tube nipple and adapter
4 Sensor cables
5 Fieldbus cables
6 Fieldbus shielded cable

1. Mount the thermowell and screw down (1).
2. Screw the insert with the neck tube nipple and adapter into the transmitter (2). Seal the nipple and adapter thread with silicone tape.
3. Guide the sensor cables (4) through the cable gland of the fieldbus transmitter housing into the connection compartment.
4. Fit the field transmitter with the insert on the thermowell (1).
5. Mount the fieldbus shielded cable or fieldbus connector (6) on the opposite cable gland.
6. Guide the fieldbus cables (5) through the cable gland of the fieldbus transmitter housing into the connection compartment.

7. Screw the cable gland tight as described in the *Ensuring the degree of protection* section. The cable gland must meet explosion protection requirements. → 20

4.2.2 Remote mounting

NOTICE

Do not over tighten the mounting screws of the 2" pipe mounting bracket in order to prevent any damage.

- Maximum torque = 6 Nm (4.43 lbf ft)

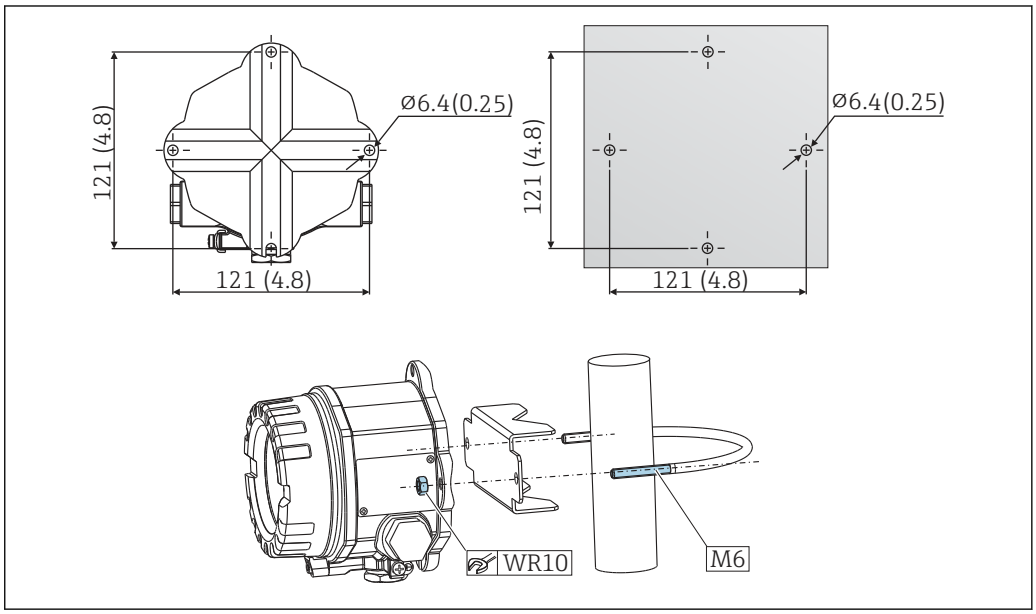

2 *Mounting of the field transmitter via direct wall mounting or with a 2" pipe mounting bracket (316L, available as an accessory). Dimensions in mm (in)*

4.3 Display mounting

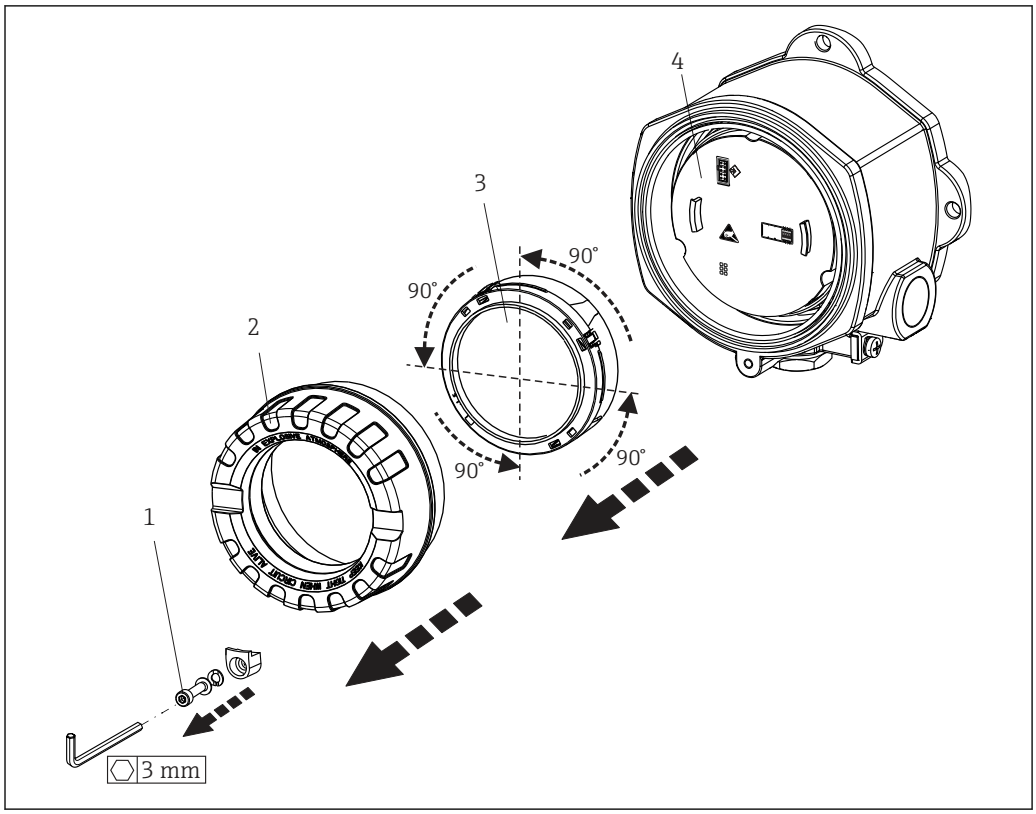

3 4 display installation positions, attachable in 90° stages

1 Cover clamp
2 Housing cover with O-ring
3 Display with fitting kit and twist protection
4 Electronics module

1. Remove the cover clamp (1).
2. Unscrew the housing cover together with the O-ring (2).
3. Remove the display with twist protection (3) from the electronics module (4). Fit the display with the fitting kit in the desired position in 90° stages and plug it into the correct slot on the electronics module.
4. Clean the thread in the housing cover and housing base and lubricate if necessary. (Recommended lubricant: Klüber Syntheso Glep 1)
5. Then screw the housing cover together with the O-ring.
6. Fit the cover clamp (1) back on.

4.4 Post-installation check

After installing the device, carry out the following checks:

Device condition and specifications	Notes
Is the device undamaged (visual inspection)?	-
Do the ambient conditions match the device specification (e.g. ambient temperature, measuring range, etc.)?	→ 47

5 Electrical connection

5.1 Connecting requirements

⚠ CAUTION

The electronics could be destroyed

- Switch off the power supply before installing or connecting the device. Failure to observe this may result in the destruction of parts of the electronics.
- When connecting Ex-certified devices, please take special note of the instructions and connection schematics in the Ex-specific supplement to these Operating Instructions. Contact the supplier if you have any questions.
- Do not occupy the display connection. An incorrect connection can destroy the electronics.

NOTICE

Do not over tighten the screw terminals, as this could damage the transmitter.

- Maximum torque = 1 Nm (¾ lbf ft).

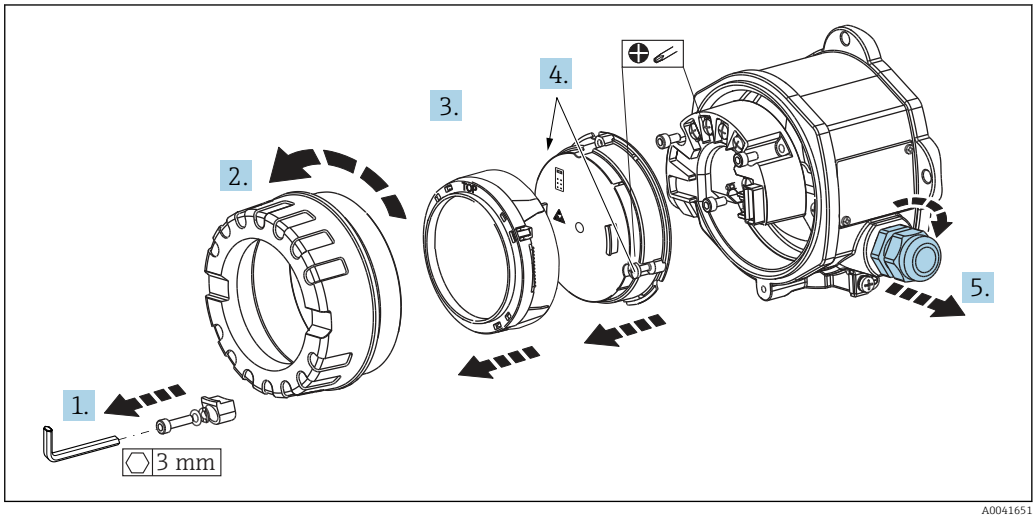

A0041651

General procedure for terminal connection:

1. Loosen the cover clamp.
2. Unscrew the housing cover together with the O-ring.
3. Remove the display module from the electronics unit.
4. Loosen the two fixing screws on the electronics unit and then remove the unit from the housing.
5. Open the side cable glands of the device.
6. Feed the corresponding connecting cables through the openings of the cable gland.
7. Wire the sensor cables and fieldbus/power supply as specified in the 'Connecting the sensor' and 'Connecting the measuring device' sections.

On completion of the wiring, screw the screw terminals tight. Tighten the cable glands again and reassemble the device by following the reverse order of steps. Refer to the information provided in the 'Ensuring the degree of protection' section. Clean the thread in the housing cover and housing base and lubricate if necessary. (Recommended lubricant: Klüber Syntheso Glep 1). Screw the housing cover tight again, fit the cover clamp and fasten.

In order to avoid connection errors always follow the instructions in the post-connection check section before commissioning the device!

5.2 Connecting the sensor

NOTICE

- ESD - Electrostatic discharge. Protect the terminals from electrostatic discharge. Failure to observe this may result in the destruction or malfunction of parts of the electronics.

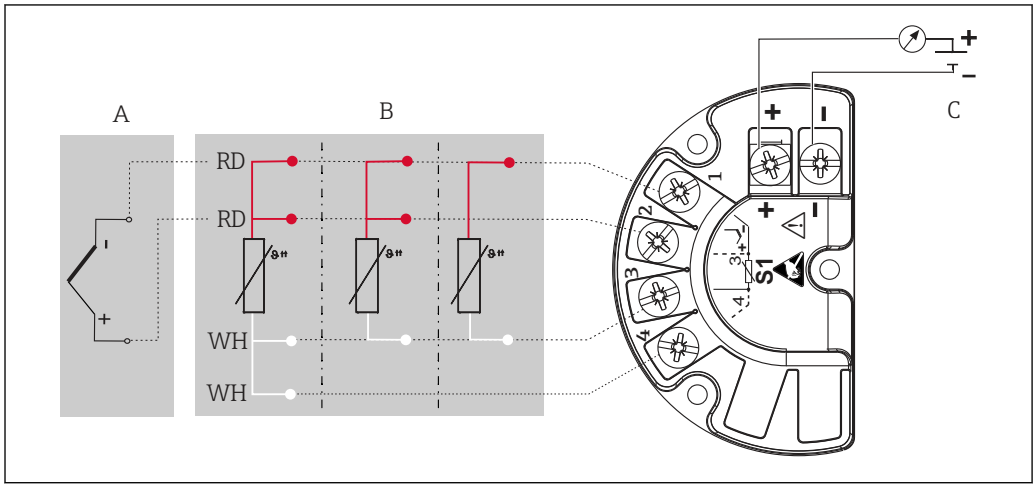

A0052568

4 *Terminal assignment of the field transmitter*

A Sensor input, thermocouple (TC) and mV
B Sensor input, RTD and Ω, 4-, 3- and 2-wire
C Bus terminator and power supply

In the event of a thermocouple (TC) measurement, an RTD Pt100 2-wire sensor can be connected to measure the reference junction temperature. This is connected to terminals 1 and 3. The reference junction used is selected in the menu: **Application → Sensor → Reference junction**

5.3 Connecting the measuring device

5.3.1 Cable glands or entries

CAUTION

Risk of damage

- If the device has not been grounded as a result of the housing being installed, we recommended grounding it via one of the ground screws. Observe the grounding concept of the plant! Keep the cable shield between the stripped fieldbus cable and the ground terminal as short as possible! Connection of the functional grounding may be needed for functional purposes. Compliance with the electrical codes of individual countries is mandatory.
- If the shielding of the fieldbus cable is grounded at more than one point in systems that do not have additional potential equalization, mains frequency equalizing currents can occur that damage the cable or the shielding. In such cases the shielding of the fieldbus cable is to be grounded on one side only, i.e. it must not be connected to the ground terminal of the housing. The shield that is not connected should be insulated!

Cable specification

- A normal device cable suffices if only the analog signal is used.
- A shielded cable is recommended for HART® communication. Observe grounding concept of the plant.
- The terminals for the fieldbus connection have integrated polarity protection.
- Cable cross-section: max. 2.5 mm²

Follow the general procedure. → 15

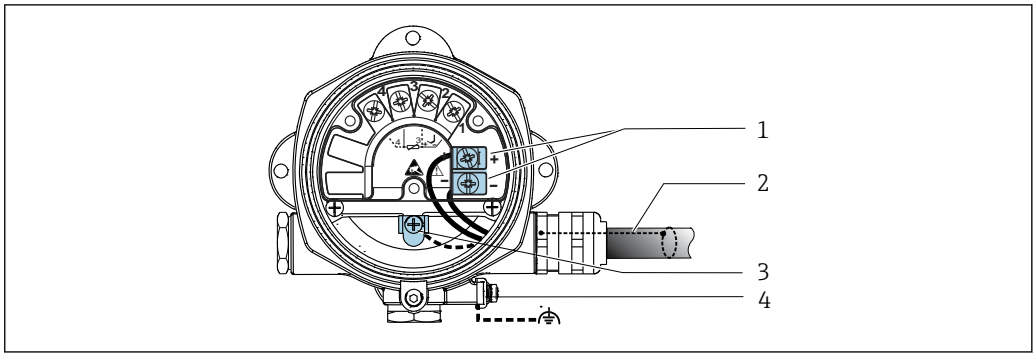

5 *Connecting the device to the fieldbus cable*

1 *Fieldbus terminals - fieldbus communication and power supply*
2 *Shielded fieldbus cable*
3 *Ground terminals, internal*
4 *Ground terminal, external*

5.3.2 Connecting the HART® communication resistor

If the HART® communication resistor is not integrated into the power supply unit, it is necessary to incorporate a communication resistor of 250 Ω into the 2-wire cable. For the connection, also refer to the documentation published by the HART® FieldComm Group, particularly HCF LIT 20: “HART, a technical summary”.

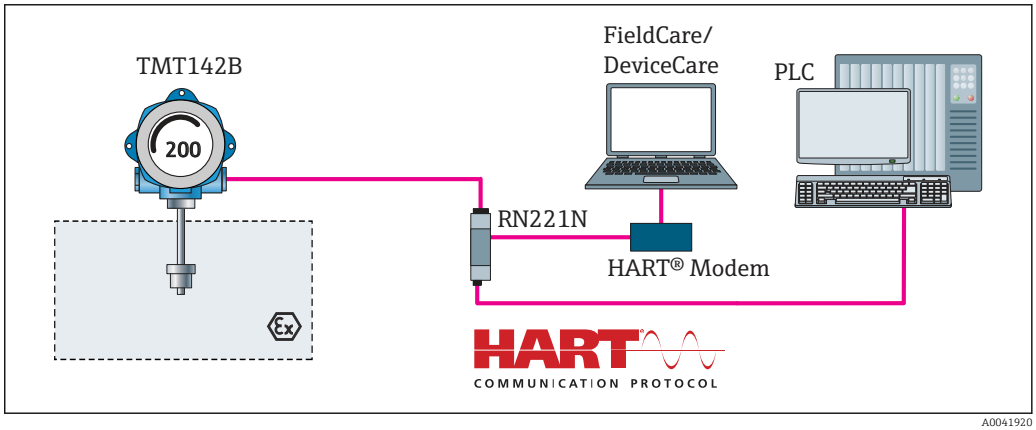

6 *HART® connection with Endress+Hauser power supply unit, including integrated communication resistor*

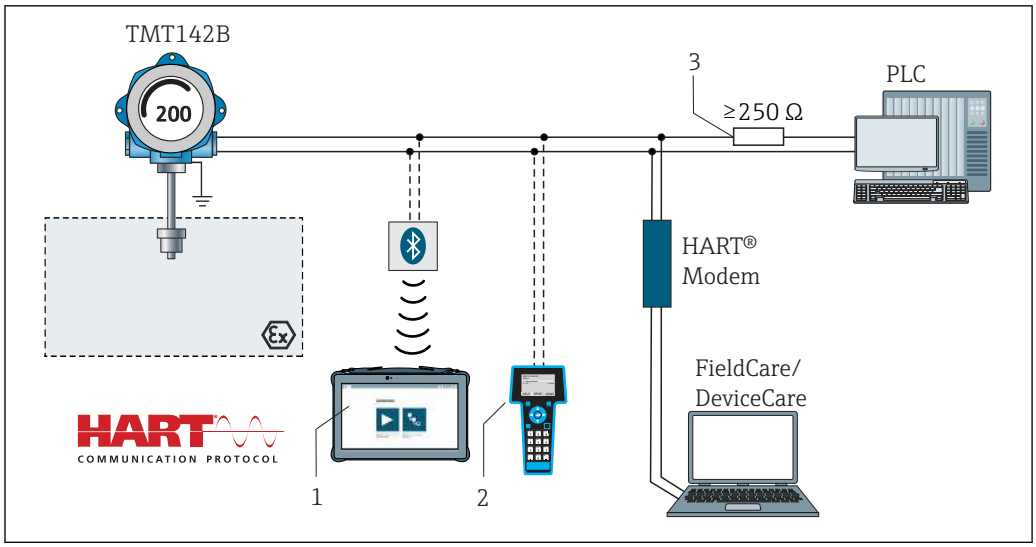

7 *HART® connection with other power supply units that do not have a built-in HART® communication resistor*

1 *Configuration via Field Xpert SMT70*
2 *HART® handheld communicator*
3 *HART® communication resistor*

5.3.3 Shielding and grounding

The specifications of the FieldComm Group must be observed during installation.

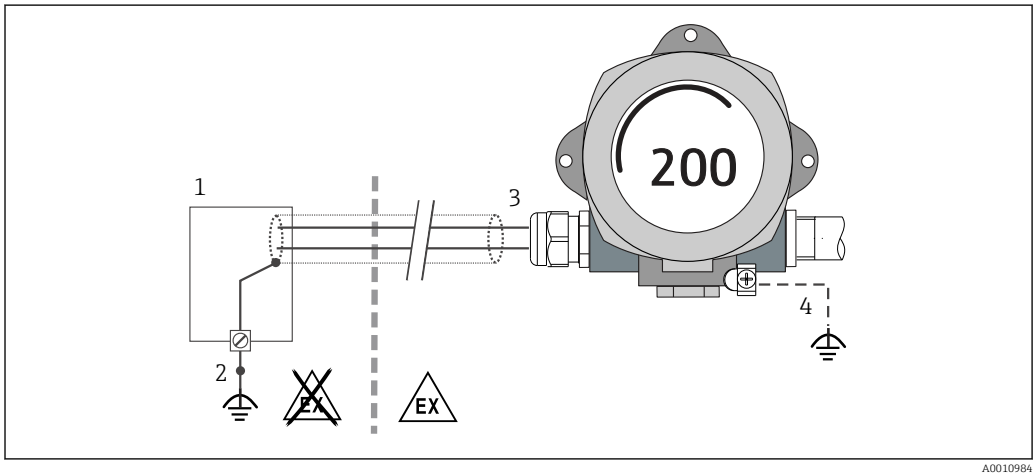

8 *Shielding and grounding the signal cable at one end with HART® communication*

1 *Supply unit*
2 *Grounding point for HART® communication cable shield*
3 *Grounding of the cable shield at one end*
4 *Optional grounding of the field device, isolated from cable shielding*

5.4 Special connection instructions

If the device is fitted with an overvoltage protection module, the bus is connected and the power is supplied via the screw terminals on the overvoltage protection module.

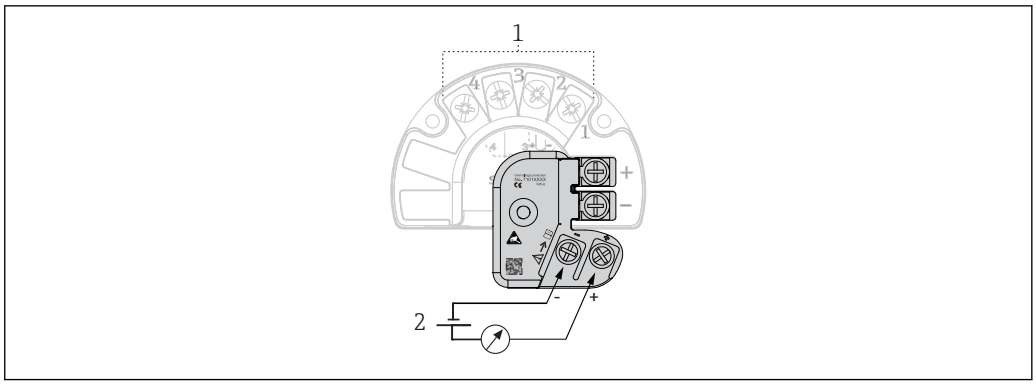

9 *Electrical connection of overvoltage protection*

1 Sensor connection
2 Bus terminator and power supply

Overvoltage protection function test

NOTICE

To perform the function test on the overvoltage protection module correctly:

- ▶ Remove the overvoltage protection module before performing the test.
- ▶ To do so, release screws (1) and (2) with a screwdriver and release securing screw (3) with an Allen key.
- ▶ The overvoltage protection module can be lifted off easily.
- ▶ Perform the function test as shown in the following graphic.

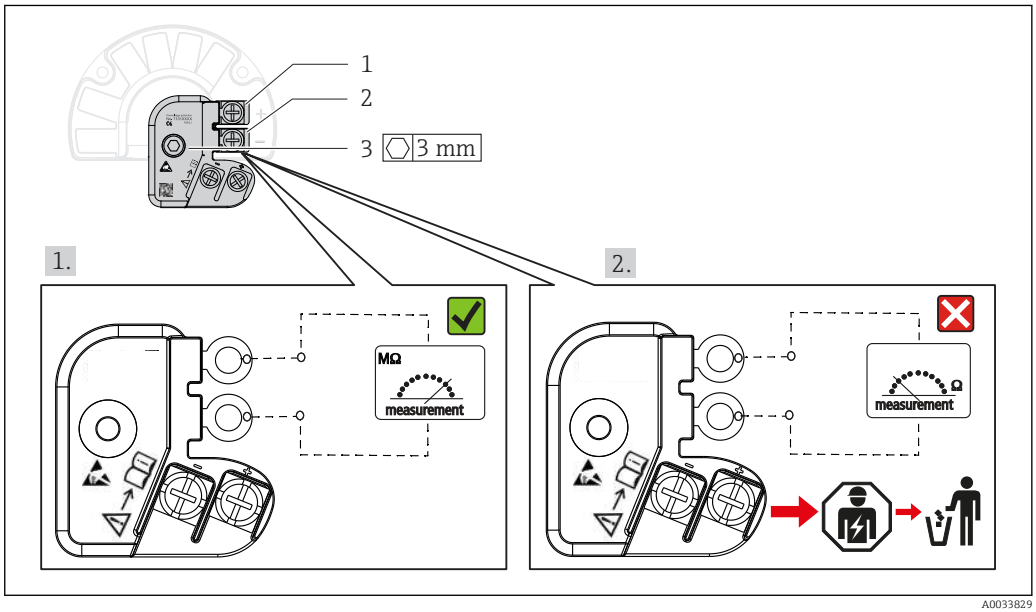

10 *Overvoltage protection function test*

Ohmmeter in high-impedance range = overvoltage protection working ☑.

Ohmmeter in low-impedance range = overvoltage protection defective ☒. Inform the manufacturer's service department. Then dispose of the defective overvoltage protection module as electronic waste. For information on device disposal, see the 'Repair' section.

5.5 Ensuring the degree of protection

The device meets the requirements for IP67 protection. Compliance with the following points is mandatory following installation in the field or servicing in order to ensure that IP67 protection is maintained:

- The housing seals must be clean and undamaged when inserted into the sealing groove. The seals must be dried, cleaned or replaced if necessary.
- The connecting cables used must have the specified external diameter (e.g. M20x1.5, cable diameter 8 to 12 mm).
- Firmly tighten the cable gland. → 11, 20
- The cables must loop down before they enter the cable glands ("water trap"). This means that any moisture that may form cannot enter the gland. Install the device in such a way that the cable glands are not facing upwards. → 11, 20
- Replace unused cable glands with dummy plugs.
- Do not remove the grommet from the cable gland.

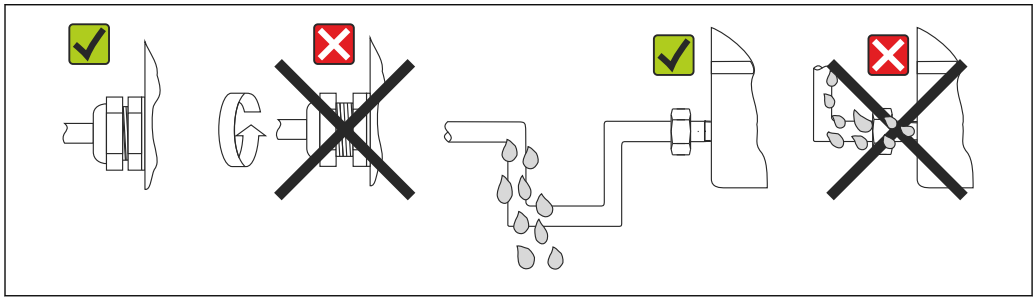

A0024523

11 *Connection tips to retain IP67 protection*

5.6 Post-connection check

Device condition and specifications	Notes
Is the device or cable undamaged (visual check)?	--
Electrical connection	**Notes**
Does the supply voltage match the information on the nameplate?	U = 11 to 36 V_{DC}
Do the cables have adequate strain relief?	Visual inspection
Are the power supply and signal cables connected correctly?	→ 15
Are all the screw terminals sufficiently tightened?	
Are all cable entries mounted, tightened and leak-tight?	
Housing cover installed and firmly tightened?	

6 Operation options

6.1 Overview of operation options

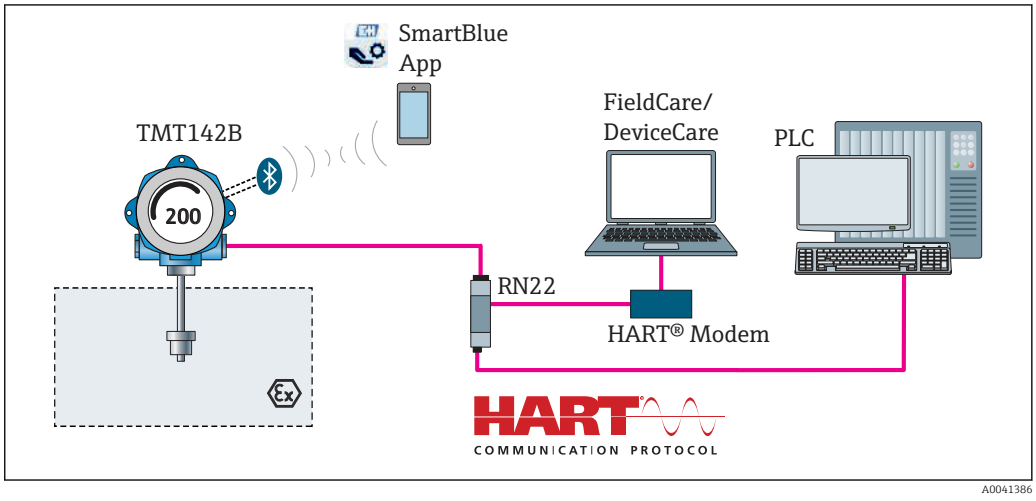

12 *Operation options for the transmitter via HART® and Bluetooth® communication*

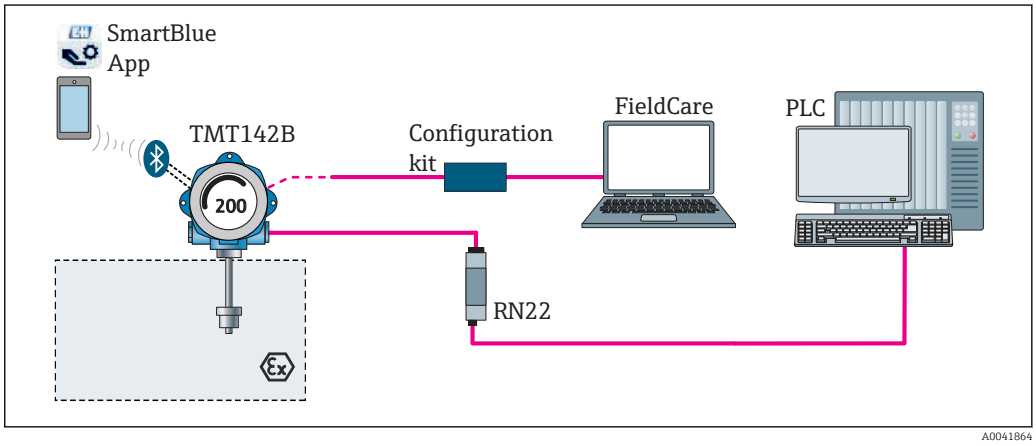

13 *Operation options for the transmitter via the CDI interface*

The optional Bluetooth® interface of the transmitter is only active if the CDI interface is not used for device configuration. See also the following graphic for setting the DIP switch. → 23

6.1.1 Measured value display and operating elements

Display elements

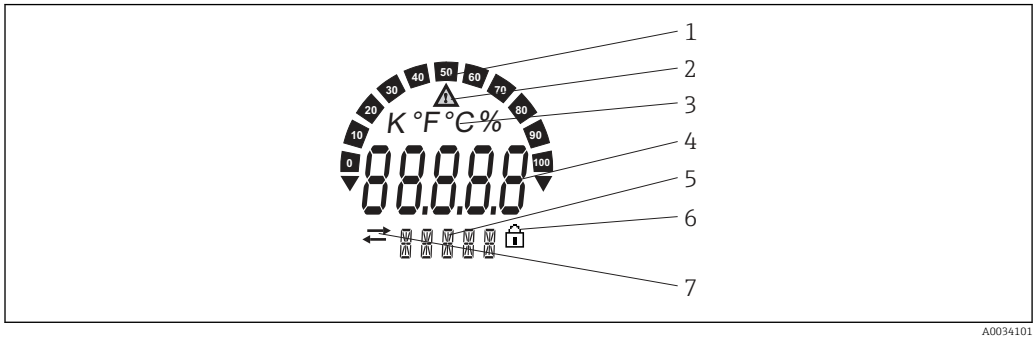

14 *LC display of the field transmitter (illuminated, attachable in 90° stages)*

Item No.	Function	Description
1	Bar graph display	In increments of 10% with indicators for underranging and overranging.
2	'Caution' symbol	This is displayed when an error or warning occurs.
3	Unit display K, °F, °C or %	Unit display for the internal measured value displayed.
4	Measured value display, digit height 20.5 mm	Displays the current measured value. In the event of an error or warning, the corresponding diagnostics information is displayed. → 39 Displays the current measured value. In the event of an error or warning, the corresponding diagnostics information is displayed. Please refer to the relevant Operating Instructions for the device for more information.
5	Status and information display	Indicates which value is currently shown on the display. Text can be entered for every value. In the event of an error or a warning, the sensor input that triggered the error/warning is also displayed where applicable, e.g. **SENS1**
6	'Configuration locked' symbol	The 'configuration locked' symbol appears when configuration is locked via the hardware or software
7	'Communication' symbol	The communication symbol appears when HART® communication is active.

Local operation

Hardware write protection and the Bluetooth® function can be activated via DIP switches on the electronics module. When write protection is active, parameters cannot be modified. A lock symbol on the display indicates that write protection is on. Write protection prevents any write access to the parameters. When the Bluetooth® function is enabled, the device is ready to communicate with the SmartBlue App via Bluetooth®.

The Bluetooth® function can also be disabled via device configuration. If the Bluetooth® function is disabled via the DIP switch, it cannot be enabled via device configuration. The DIP switch has a higher priority.

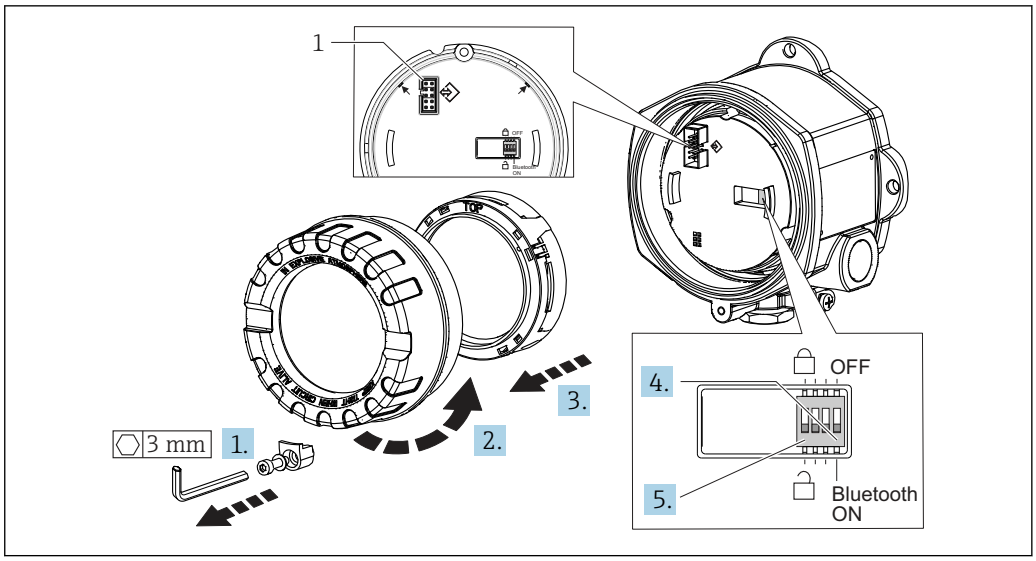

1 CDI interface

Procedure for setting the DIP switch:

1. Remove the cover clamp.
2. Unscrew the housing cover together with the O-ring.
3. If necessary, remove the display with the fitting kit from the electronics module.
4. Configure the Bluetooth® function accordingly using the DIP switch. In general, the following applies: switch to ON = function enabled, switch to OFF = function disabled.
5. Configure the hardware write protection accordingly using the DIP switch. In general, the following applies: switch set to closed lock symbol = function enabled, switch set to open lock symbol = function disabled.

Once the hardware setting has been made, re-assemble the housing cover in the reverse order.

6.2 Structure and function of the operating menu

6.2.1 Structure of the operating menu

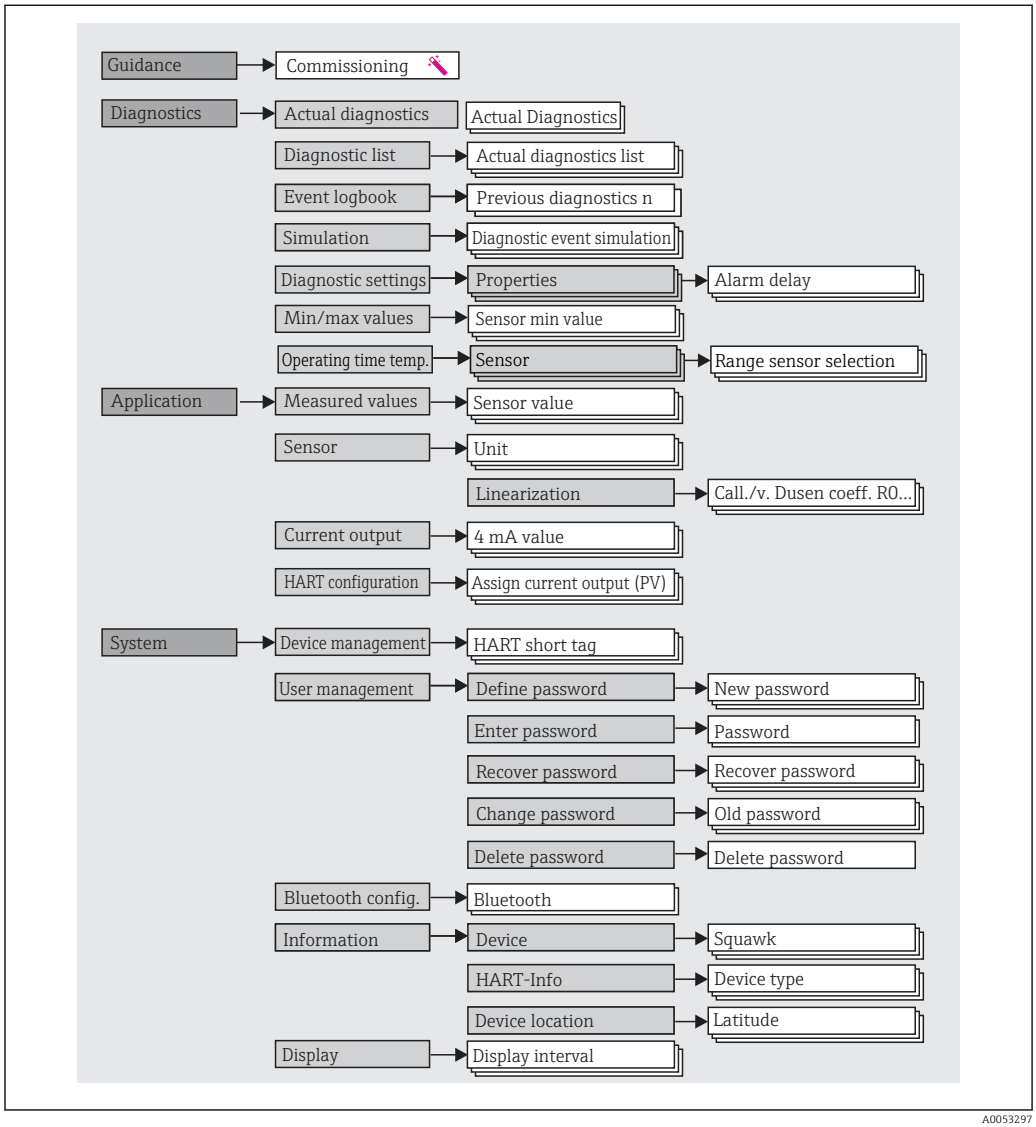

User roles

Endress+Hauser's role-based access concept consists of two hierarchical levels for the user and presents the various user roles with defined read/write authorizations.

- **Operator**
  The plant operator can only change settings that do not affect the application - and particularly the measuring path - and simple, application-specific functions that are used during operation. The operator is able to read all the parameters, however.
- **Maintenance**
  The **Maintenance** user role refers to configuration situations: commissioning and process adaptations as well as troubleshooting. It allows the user to configure and modify all available parameters. In contrast to the **Operator** user role, in the Maintenance role the user has read and write access to all the parameters.
- **Changing the user role**
  A user role - and therefore existing read and write authorization - is changed by selecting the desired user role (already preselected depending on the operating tool) and entering the correct password when subsequently prompted. When a user logs out, system access always returns to the lowest level in the hierarchy. A user is logged out either by actively selecting the logout function when operating the device or is logged out automatically if the device is not operated for a period of over 600 seconds. Irrespective of this, actions that are already in progress (e.g. active upload/download, data logging, etc.) continue to be executed in the background.
- **As-delivered state**
  The **Operator** user role is not enabled when the device is delivered from the factory, i.e. the **Maintenance** role is the lowest level in the hierarchy ex-works. This state makes it possible to commission the device and make other process adaptations without having to enter a password. Afterwards, a password can be assigned for the **Maintenance** user role to protect this configuration. The **Operator** user role is not visible when the device is delivered from the factory.
- **Password**
  The **Maintenance** user role can assign a password in order to restrict access to device functions. This activates the **Operator** user role, which is now the lowest hierarchy level where the user is not asked to enter a password. The password can only be changed or disabled in the **Maintenance** user role. A password can be defined at different points in the operation of the device:

In the menu: Guidance → Commissioning wizard: as part of guided device operation

In the menu: System → User management

Submenus

Menu	Typical tasks	Content/meaning
"Diagnostics"	Troubleshooting: ▪ Diagnosing and eliminating process errors. ▪ Error diagnostics in difficult cases. ▪ Interpretation of device error messages and correcting associated errors.	Contains all parameters for detecting and analyzing errors: ▪ **Diagnostic list** Contains up to 3 error messages currently pending ▪ **Event logbook** Contains the last 10 error messages ▪ **"Simulation" submenu** Used to simulate measured values, output values or diagnostic messages ▪ **"Diagnostic settings" submenu** Contains all the parameters for configuring error events ▪ **"Min/max values" submenu** Contains the minimum/maximum indicator and the reset option ▪ **Operating time temperature range** Contains the lengths of time the sensor was operated in the predefined temperature ranges
"Application"	Commissioning: ▪ Configuration of the measurement. ▪ Configuration of data processing (scaling, linearization, etc.). ▪ Configuration of the analog measured value output. Tasks during operation: Reading measured values.	Contains all of the parameters for commissioning: ▪ **"Measured values" submenu** Contains all the current measured values ▪ **"Sensor" submenu** Contains all the parameters for configuring the measurement ▪ **"Output" submenu** Contains all the parameters for configuring the analog current output ▪ **"HART configuration" submenu** Contains the settings and the most important parameters for HART communication
"System"	Tasks that require detailed knowledge of the system administration of the device: ▪ Optimum adaptation of the measurement for system integration. ▪ Detailed configuration of the communication interface. ▪ User and access administration, password control ▪ Information concerning device identification, HART information, and display configuration	Contains all the higher-level device parameters that are assigned for system, device and user management, including Bluetooth configuration. ▪ **"Device management" submenu** Contains parameters for general device management ▪ **"Bluetooth configuration" submenu (option)** Contains the function for enabling/disabling the Bluetooth® interface ▪ **"Device and user management" submenus** Parameters for access authorization, password assignment, etc. ▪ **"Information" submenu** Contains all the parameters for the unique identification of the device ▪ **"Display" submenu** Configuration of the display

6.3 Access to the operating menu via the operating tool

6.3.1 DeviceCare

Function range

DeviceCare is a free configuration tool for Endress+Hauser devices. It supports devices with the following protocols, provided a suitable device driver (DTM) is installed: HART, PROFIBUS, FOUNDATION Fieldbus, Ethernet/IP, Modbus, CDI, ISS, IPC and PCP. The target group comprises customers without a digital network in plants and workshops as well as Endress+Hauser service technicians. The devices can be connected directly via a modem (point-to-point) or a bus system. DeviceCare is fast, easy and intuitive to use. It can run on a PC, laptop or tablet with a Windows operating system.

Source for device description files

See information → 31

6.3.2 FieldCare

Function range

FDT/DTM-based plant asset management tool from Endress+Hauser. It can configure all smart field units in a system and helps you manage them. By using the status information, it is also a simple but effective way of checking their status and condition. Access is via the HART® protocol, CDI (= Endress+Hauser Common Data Interface). It also supports devices with the following protocols, provided a suitable device driver (DTM) is installed: PROFIBUS, FOUNDATION Fieldbus.

Typical functions:
- Parameter configuration of transmitters
- Loading and saving of device data (upload/download)
- Documentation of the measuring point
- Visualization of the measured value memory (line recorder) and event logbook

For details, see Operating Instructions BA027S/04/xx and BA059AS/04/xx

Source for device description files

See information→ 31

Connecting the device

Example: HART® modem Commubox FXA195 (USB)

1. Make sure that the DTM library is updated for all the connected devices (e.g. FXA19x, TMTxy).
2. Start FieldCare and create a project.
3. Go to View --> Network: right-click **Host PC** Add device...
   ↳ The **add device** window opens.
4. Select the **HART Communication** option from the list and press **OK** to confirm.
5. Double-click **HART communication** DTM instance.
   ↳ Check whether the correct modem is connected to the serial interface connection and press **OK** to confirm.
6. Right-click **HART communication** and select the **Add device...** option in the context menu that opens.
7. Select the desired device from the list and press **OK** to confirm.
   ↳ The device now appears in the network list.
8. Right-click the device and select the **Connect** option in the context menu.
   ↳ The CommDTM is displayed in green.
9. Double-click the device in the network to establish the online connection to the device.
   ↳ The online configuration is available.

If transferring the device parameters following an offline configuration, the password for **Maintenance** - if assigned - must first be entered in the "User management" menu.

User interface

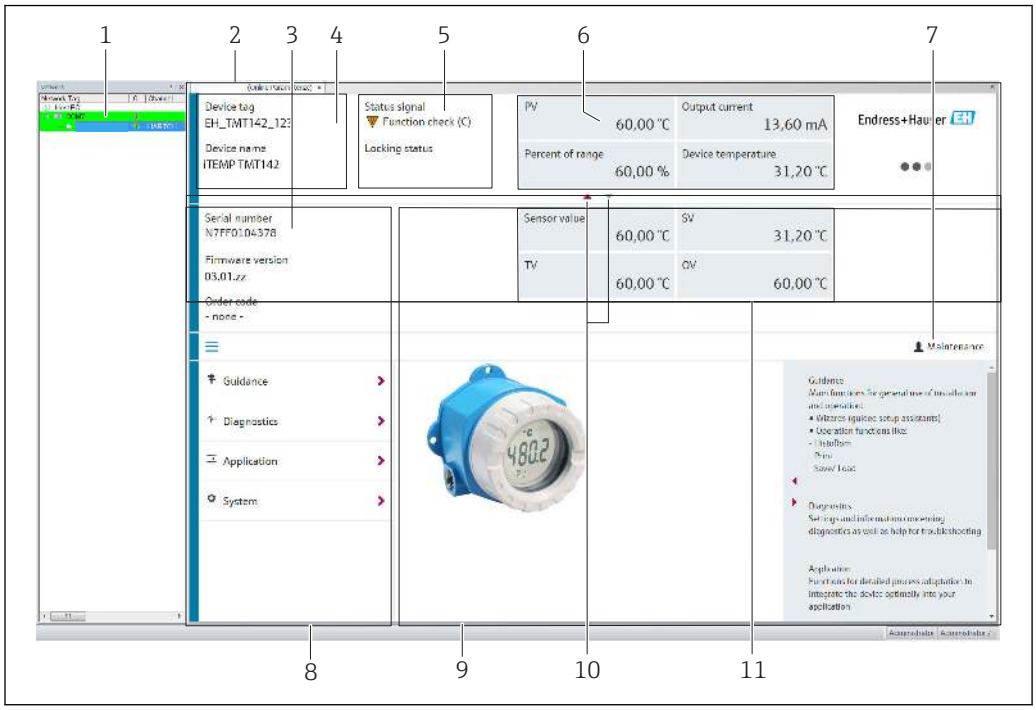

15 FieldCare user interface with device information

1 *Network view*
2 *Header*
3 *Extended header*
4 *Device tag and device name*
5 *Status signal*
6 *Measured values with device and measured value status information, simple presentation, e.g. PV, output current, % span, device temperature*
7 *Current user role (with direct link to user management)*
8 *Navigation area with operating menu structure*
9 *Work area and help section that can be shown/hidden*
10 *Navigation arrow to show/hide the extended header*
11 *Extended display of device and measured value information, e.g. sensor value, SV (TV, QV)*

6.3.3 Field Xpert

Function range

Field Xpert for mobile plant asset management is available as both a tablet PC and an industrial PDA with an integrated touch screen for the commissioning and maintenance of field devices in hazardous and non-hazardous areas. It enables the efficient configuration of FOUNDATION fieldbus, HART and WirelessHART devices. Communication is wireless via Bluetooth® or WiFi interfaces.

Source for device description files

See information → 31.

6.3.4 AMS Device Manager

Function range

Program from Emerson Process Management for operating and configuring measuring devices via the HART® protocol.

Source for device description files

See information→ 31.

6.3.5 SIMATIC PDM

Function range

SIMATIC PDM is a standardized, manufacturer-independent program from Siemens for the operation, configuration, maintenance and diagnosis of intelligent field devices via the HART® protocol.

Source for device description files

See information → 31.

6.3.6 Field Communicator 375/475

Function range

Industrial handheld terminal from Emerson Process Management for remote configuration and measured value display via the HART ® protocol.

Source for device description files

See information → 31.

6.4 Access to the operating menu via the SmartBlue App

Bluetooth® wireless technology

Signal transmission via Bluetooth® wireless technology uses a cryptographic technique tested by the Fraunhofer Institute
The device is not visible via Bluetooth® wireless technology without the SmartBlue App, DeviceCare or FieldXpert SMT70
Only one point-to-point connection is established between a measuring device and a smartphone or tablet
The Bluetooth® wireless technology interface can be disabled via SmartBlue, FieldCare and DeviceCare or a hardware DIP switch

Prerequisite:
- The device has the optional Bluetooth® interface: order code "Communication; output signal; operation", option P: "HART; 4-20 mA; HART/Bluetooth (app) configuration"
- A smartphone or tablet with the SmartBlue App installed.

Supported functions
- Device selection in Live List and access to the device (login)
- Configuration of the device
- Access to measured values, device status and diagnostic information

The SmartBlue App is available for free download for Android devices (Google Playstore) and iOS devices (iTunes Apple Shop) : *Endress+Hauser SmartBlue*

Directly to the app with the QR code:



A0037924

Download the SmartBlue App:

1. Install and start the SmartBlue App.
   ↳ A Live List shows all the devices available.
2. Select the device from the Live List.
   ↳ The Login dialog box opens.

Logging in:

3. Enter the user name: **admin**
4. Enter the initial password: serial number of the device.
5. Confirm your entry.
   ↳ The device information opens.

After a successful connection, the device display starts flashing for 60 seconds. This is for device identification. This function is used for easy identification of the device when onsite in the field.

Navigate through the various items of information about the device: swipe the screen to the side.

- The minimum ranges under reference operating conditions are:
  - 25 m (82 ft) for housing version with display window
  - 10 m (33 ft) for housing version without display window
- Incorrect operation by unauthorized persons is prevented by means of encrypted communication and password encryption.
- The Bluetooth® wireless technology interface can be deactivated.

7 System integration

7.1 Overview of device description files

Version data for the device

Firmware version	03.01.z	▪ On the title page of the Operating Instructions ▪ On the nameplate ▪ **Firmware version** parameter Diagnostics → Device info → Firmware version
Manufacturer ID	0x11	**Manufacturer ID** parameter Diagnostics → Device info → Manufacturer ID
Device type ID	0x11D1	**Device type** parameter Diagnostics → Device info → Device type
HART protocol revision	7	---
Device revision	3	▪ On the transmitter nameplate ▪ **Device revision** parameter Diagnostics → Device info → Device revision

The suitable device driver software (DD/DTM) for the individual operating tools can be acquired from a variety of sources:
- www.endress.com--> Downloads --> Device drivers (select type and product root)
- www.endress.com --> Products: Individual product page, e.g. TMTxy --> Downloads --> Device drivers: Electronic Data Description (EDD) or Device Type Manager (DTM).

Endress+Hauser supports all common operating tools from a variety of manufacturers (e.g. Emerson Process Management, ABB, Siemens, Yokogawa, Honeywell and many others). The Endress+Hauser FieldCare and DeviceCare operating tools are also available for download (www.software-products.endress.com).

7.2 Measured variables via HART protocol

The following measured values are assigned to the device variables at the factory:

Device variable	Measured value
Primary device variable (PV)	Sensor 1
Secondary device variable (SV)	Device temperature
Tertiary device variable (TV)	Sensor 1
Quaternary device variable (QV)	Sensor 1

7.3 Supported HART® commands

The HART® protocol enables the transfer of measuring data and device data between the HART® master and the field device for configuration and diagnostics purposes. HART® masters such as the handheld terminal or PC-based operating programs (e.g. FieldCare) need device description files (DD, DTM) which are used to access all the information in a HART® device. This information is transmitted exclusively via "commands".

There are three different types of command
- Universal commands:
  All HART® devices support and use universal commands. These are associated with the following functionalities for example:
  - Recognition of HART® devices
  - Reading digital measured values
- Common practice commands:
  Common practice commands offer functions which are supported and can be executed by many but not all field devices.
- Device-specific commands:
  These commands allow access to device-specific functions which are not HART® standard. Such commands access individual field device information, among other things.

Command No.	Designation
Universal commands	
0, Cmd0	Read unique identifier
1, Cmd001	Read primary variable
2, Cmd002	Read loop current and percent of range
3, Cmd003	Read dynamic variables and loop current
6, Cmd006	Write polling address
7, Cmd007	Read loop configuration
8, Cmd008	Read dynamic variable classifications
9, Cmd009	Read device variables with status
11, Cmd011	Read unique identifier associated with TAG
12, Cmd012	Read message
13, Cmd013	Read TAG, descriptor, date
14, Cmd014	Read primary variable transducer information
15, Cmd015	Read device information
16, Cmd016	Read final assembly number
17, Cmd017	Write message
18, Cmd018	Write TAG, descriptor, date
19, Cmd019	Write final assembly number
20, Cmd020	Read long TAG (32-byte TAG)
21, Cmd021	Read unique identifier associated with long TAG
22, Cmd022	Write long TAG (32-byte TAG)
38, Cmd038	Reset configuration changed flag
48, Cmd048	Read additional device status
Common practice commands	
33, Cmd033	Read device variables
34, Cmd034	Write primary variable damping value
35, Cmd035	Write primary variable range values
40, Cmd040	Enter/Exit fixed current mode
42, Cmd042	Perform device reset
44, Cmd044	Write primary variable units
45, Cmd045	Trim loop current zero
46, Cmd046	Trim loop current gain

Command No.	Designation
50, Cmd050	Read dynamic variable assignments
54, Cmd054	Read device variable information
59, Cmd059	Write number of response preambles
72, Cmd072	Squawk
95, Cmd095	Read device communication statistics
100, Cmd100	Write primary variable alarm code
516, Cmd516	Read device location
517, Cmd517	Write device location
518, Cmd518	Read location description
519, Cmd519	Write location description
520, Cmd520	Read process unit tag
521, Cmd521	Write process unit tag
523, Cmd523	Read condensed status mapping array
524, Cmd524	Write condensed status mapping array
525, Cmd525	Reset condensed status mapping array
526, Cmd526	Write simulation mode
527, Cmd527	Simulate status bit

8 Commissioning

8.1 Post-installation check

All the final checks must be performed before the measuring point is put into operation:
- Checklist for "Post-mounting check"→ 14
- Checklist for "Post-connection check"→ 20

8.2 Switching on the transmitter

Once you have completed the post-connection checks, switch on the supply voltage. The transmitter performs a number of internal test functions after power-up. During this process, the following sequence of messages appears on the display:

Display
All segments active
▼
All segments off
▼
Display version
▼
Device name (scrolling text), device revision, firmware version, hardware version, bus address
▼
Measured value or current status message If the switch-on procedure is not successful, the relevant diagnostic event, depending on the cause, is displayed. For a detailed list of diagnostic events and the corresponding troubleshooting instructions, see the "Diagnostics and troubleshooting" section.

The device works after approx. 7 seconds. Normal measuring mode commences as soon as the switch-on procedure is completed. Measured values and status values appear on the display.

8.3 Configuring the measuring device

8.3.1 Enabling configuration

If the device is locked and the parameter settings cannot be changed, it must first be enabled via the hardware or software lock. The device is write-protected if the lock symbol is shown on the display.

To unlock the device
- either switch the write protection switch on the electronics module to the "ON" (open lock symbol) position (hardware write protection), or
- deactivate the software write protection via the operating tool. See the description for the **'User management'** submenu. → 85

When hardware write protection is active (write protection switch set to the position with the closed lock symbol), write protection cannot be disabled via the operating tool. Hardware write protection must always be disabled before software write protection can be enabled or disabled via the operating tool.

8.3.2 Wizards

The starting point for device wizards is in the **Guidance** menu. Wizards not only query individual parameters but also guide the user through the configuration and/or verification of entire sets of parameters with step-by-step instructions, including questions, that are comprehensible for the user. The "Start" button can be disabled for wizards that require specific access authorization (lock symbol appears on the screen).

The following five operating elements are supported for navigation in the wizards:

- **Start**
  Only on the initial page: start the wizard and go to the first section
- **Next**
  Go to the next page of the wizard. Is not enabled until parameters are entered or confirmed.
- **Back**
  Return to the previous page
- **Cancel**
  If Cancel is selected, the status before the wizard was started is restored
- **Finish**
  Closes the wizard and possibility of making additional parameter settings on the device. Only enabled on the final page.

8.3.3 Commissioning wizard

Commissioning is the first step required in order to use a device for a specific application. The Commissioning wizard contains an introductory page (with the "Start" operating element) and a short description of the content. The wizard consists of several sections in which the user is guided step-by-step through the commissioning of the device.

"Device management" is the first section that appears when the user runs the wizard, and contains the following parameters. Its main purpose is to provide information about the device:

Navigation **Guidance → Commissioning → Start**

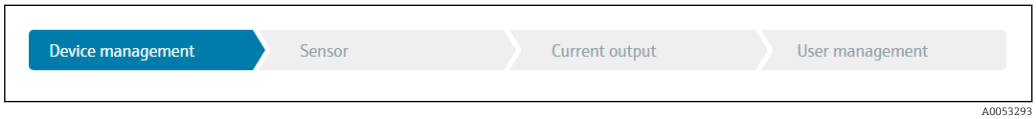

A0053293

Device TAG
Device name
Serial number
Extended order code (n) [1)]

1) n = placeholder for 1, 2, 3

The second section, "Sensor", takes the user through all the relevant settings for the sensor. The number of parameters displayed depends on the corresponding settings. The following parameters can be configured:

Navigation **Guidance → Commissioning → Sensor**

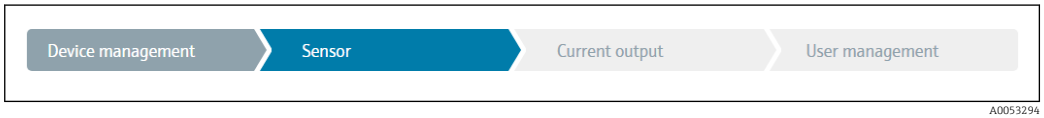

A0053294

Unit
Sensor type
Connection type
2-wire compensation

Reference junction
RJ preset value

In the third section, the settings are made for the analog output and the output's alarm response. The following parameters can be configured:

Navigation **Guidance → Commissioning → Current output**

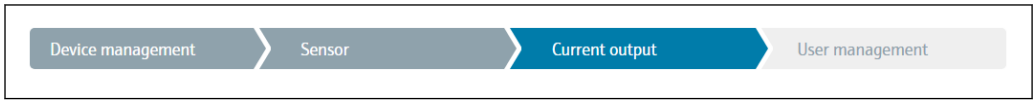

A0053295

4 mA value
20 mA value
Failure mode
Failure current

In the final section, a password can be defined for the "Maintenance" user role. This is strongly recommended to protect the device against unauthorized access. The following steps describe how to configure a password for the "Maintenance" role for the first time.

Navigation **Guidance → Commissioning → User management**

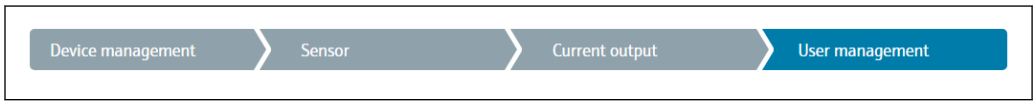

A0053296

Access status
New password
Confirm new password

1. The **Maintenance** role appears in the "Access status" picklist. The **Maintenance** user role must first be selected when operating the device with the SmartBlue App.
   ↳ Afterwards, the **New password** and **Confirm new password** input boxes appear.
2. Enter a user-defined password that meets the password rules indicated in the online help.
3. Enter the password again in the **Confirm new password** input box.

Once the password has been entered successfully, parameter changes, particularly those that are needed for commissioning, process adaptation/optimization and troubleshooting, can only be implemented in the **Maintenance** user role and if the password is entered successfully.

9 Diagnostics and troubleshooting

9.1 General troubleshooting

Always start troubleshooting with the checklists below if faults occur after startup or during operation. The checklists take you directly (via various queries) to the cause of the problem and the appropriate remedial measures.

In the event of a serious fault, the device might have to be returned to the manufacturer for repair. Refer to the "Return" section before the device is returned to the manufacturer. → 44

General errors

Error	Possible cause	Remedy
Device is not responding.	Supply voltage does not match the voltage specified on the nameplate.	Check the voltage at the transmitter directly using a voltmeter and correct.
	Connecting cables are not in contact with the terminals.	Check the contacting of the cables and terminals and correct if necessary.
	Electronics unit is defective.	Replace the device.
Output current < 3.6 mA	Signal line is not wired correctly.	Check wiring.
	Electronics unit is defective.	Replace the device.
HART communication is not working.	Missing or incorrectly installed communication resistor.	Install the communication resistor (250 Ω) correctly.
	Commubox is connected incorrectly.	Connect Commubox correctly.
	Commubox is not set to "HART".	Set Commubox selector switch to "HART".

Check display (local display)	
Display is blank - no connection to the HART host system.	1. Check the supply voltage → terminals + and - 2. Measuring electronics defective → order spare part, → 42
Display is blank - however, connection has been established to the HART host system.	1. Check whether the display module fitting kit is correctly seated on the electronics module → 14 2. Display module defective → order spare part, → 42 3. Measuring electronics defective → order spare part, → 42

Local error messages on the display
→ 39

Faulty connection to the fieldbus host system		
Error	**Possible cause**	**Remedy**
HART communication is not working.	Missing or incorrectly installed communication resistor.	Install the communication resistor (250 Ω) correctly.
	Commubox is connected incorrectly.	Connect Commubox correctly.

Error messages in the configuration software
→ 📄 39

Application errors without status messages for RTD sensor connection

Error	Possible cause	Remedy
Measured value is incorrect/ inaccurate	Incorrect sensor orientation.	Install the sensor correctly.
	Heat conducted by sensor.	Observe the installed length of the sensor.
	Device programming is incorrect (number of wires).	Change the **Connection type** device function.
	Device programming is incorrect (scaling).	Change scaling.
	Incorrect RTD configured.	Change the **Sensor type** device function.
	Sensor connection.	Check that the sensor is connected correctly.
	The cable resistance of the sensor (2-wire) was not compensated.	Compensate the cable resistance.
	Offset incorrectly set.	Check offset.
Failure current (≤ 3.6 mA or ≥ 21 mA)	Faulty sensor.	Check the sensor.
	RTD connected incorrectly.	Connect the connecting cables correctly (terminal diagram).
	Device programming is incorrect (e.g. number of wires).	Change the **Connection type** device function.
	Incorrect programming.	Incorrect sensor type set in the **Sensor type** device function. Set the correct sensor type.

Application errors without status messages for TC sensor connection

Error	Possible cause	Remedy
Measured value is incorrect/ inaccurate	Incorrect sensor orientation.	Install the sensor correctly.
	Heat conducted by sensor.	Observe the installed length of the sensor.
	Device programming is incorrect (scaling).	Change scaling.
	Incorrect thermocouple type (TC) configured.	Change the **Sensor type** device function.
	Incorrect reference junction set.	Set the correct reference junction .
	Interference via the thermocouple wire welded in the thermowell (interference voltage coupling).	Use a sensor where the thermocouple wire is not welded.
	Offset incorrectly set.	Check offset.
Failure current (≤ 3.6 mA or ≥ 21 mA)	Faulty sensor.	Check the sensor.
	Sensor is connected incorrectly.	Connect the connecting cables correctly (terminal diagram).
	Incorrect programming.	Incorrect sensor type set in the **Sensor type** device function. Set the correct sensor type.

9.2 Diagnostic information on local display

- If a valid measured value is not available, the display alternates between "- - -- -" and the status signal plus the diagnostics number and the '⚠'symbol.
- If a valid measured value is present, the display alternates between the status signal plus the diagnostics number (7-segment display) and the primary measured value (PV) with the '⚠' symbol.

9.3 Diagnostic information via communication interface

NOTICE

Status signals and diagnostic behavior can be configured manually for certain diagnostic events. If a diagnostic event occurs, however, it is not guaranteed that the measured values are valid for the event and comply with the process for the status signals S and M and the diagnostic behavior: 'Warning' and Disabled'.

► Reset the status signal assignment to the factory setting.

Status signals

Letter/ symbol [1]	Event category	Meaning
F	Operating error	An operating error has occurred.
C	Service mode	The device is in service mode (e.g. during a simulation).
S	Out of specification	The device is being operated outside its technical specifications (e.g. during startup or cleaning processes).
M	Maintenance required	Maintenance is required.
N -	Not categorized	

1) As per NAMUR NE107

Diagnostic behavior

Alarm	Measurement is interrupted. The signal outputs adopt the defined alarm condition. A diagnostic message is generated.
Warning	The device continues to measure. A diagnostic message is generated.
Disabled	The diagnosis is completely disabled even if the device is not recording a measured value.

9.4 Diagnostic list

If several diagnostic events are pending at the same time, only the diagnostic message with the highest priority is displayed. Additional pending diagnostic messages are shown in the **Diagnostic list** submenu . The status signal dictates the priority in which the diagnostic messages are displayed. The following order of priority applies: F, C, S, M. If two or more diagnostic events with the same status signal are active simultaneously, the numerical order of the event number dictates the order of priority in which the events are displayed, e.g.: F042 appears before F044 and before S044.

9.5 Event logbook

Previous diagnostic messages are displayed in the **Event logbook** submenu. → 66

9.6 Overview of diagnostic events

Each diagnostic event is assigned a certain event behavior at the factory. The user can change this assignment for certain diagnostic events.

Example:

		Settings		Device behavior			
Configuration examples	**Diagnostic number**	**Status signal**	**Diagnostic behavior from the factory**	**Status signal (output via HART® communication)**	**Current output**	**PV,status**	**Display**
1. Default setting	047	S	Warning	S	Measured value	Measured value, UNCERTAIN	S047
2. Manual setting: status signal S changed to F	047	F	Warning	F	Measured value	Measured value, UNCERTAIN	F047
3. Manual setting: **Warning** diagnostic behavior changed to **Alarm**	047	S	Alarm	S	Configured failure current	Measured value, BAD	S047
4. Manual setting: **Warning** changed to **Disabled**	047	S [1]	Disabled	- [2]	Last valid measured value [3]	Last valid measured value, GOOD	S047

1) Setting is not relevant.
2) Status signal is not displayed.
3) The failure current is output if no valid measured value is available.

Diagnostic number	**Short text**	**Corrective measure**	**Status signal from the factory**	☑ **Customizable** [1] / ☒ **Not customizable**	**Diagnostic behavior from the factory**	☑ **Customizable** [2] / ☒ **Not customizable**
Diagnostics for the sensor						
041	Sensor interrupted	1. Check electrical wiring. 2. Replace sensor. 3. Check connection type.	F	☑	Alarm	☑
042	Sensor corroded	1. Check sensor. 2. Replace sensor.	M	☑	Warning	☑
043	Short-circuit	1. Check electrical connection. 2. Check sensor. 3. Replace sensor or cable.	F	☑	Alarm	☑
047	Sensor limit reached, sensor n	1. Check sensor. 2. Check process conditions.	S	☑	Warning	☑
145	Compensation reference point	1. Check terminal temperature. 2. Check external reference point.	F	☑	Alarm	☑
Diagnostics for the electronics						
201	Electronics faulty	1. Restart device. 2. Replace electronics.	F	☒	Alarm	☒
221	Reference sensor defective	Replace device.	M	☑	Alarm	☒
Diagnostics for the configuration						
401	Factory reset active	Factory reset active, please wait.	C	☒	Warning	☒

Diagnostic number	Short text	Corrective measure	Status signal from the factory	☑ Customizable [1] / ☒ Not customizable	Diagnostic behavior from the factory	☑ Customizable [2] / ☒ Not customizable
402	Initialization is active	Initialization active, please wait.	C	☒	Warning	☒
410	Data transfer failed	1. Check connection. 2. Retry data transfer.	F	☒	Alarm	☒
411	Upload/download active	Upload/download active, please wait.	C	☒	Warning	☒
435	Linearization incorrect	Check linearization.	F	☒	Alarm	☒
485	Simulation of the process variable is active	Deactivate simulation.	C	☒	Warning	☒
491	Current output simulation	Deactivate simulation.	C	☑	Warning	☑
495	Diagnostic event simulation active	Deactivate simulation.	C	☑	Warning	☑
531	Factory calibration missing	1. Contact service. 2. Replace device.	F	☒	Alarm	☒
537	Configuration	1. Check device configuration 2. Upload and download new configuration. (In case of current output: check configuration of analog output.)	F	☒	Alarm	☒
582	Sensor diagnostics TC deactivated	Switch on diagnostics for thermocouple measurement	C	☒	Warning	☒
Diagnostics for the process						
801	Supply voltage too low [3]	Increase supply voltage.	S	☑	Alarm	☒
825	Operating temperature	1. Check ambient temperature. 2. Check process temperature.	S	☑	Warning	☑
844	Process value out of specification	1. Check process value. 2. Check application. Check sensor. 3. Check scaling of analog output	S	☑	Warning	☑

1) Can be set to F, C, S, M, N
2) Can be set to 'Alarm', 'Warning' and 'Disabled'
3) With this diagnostic event, the device always outputs a "low" alarm status (output current ≤ 3.6 mA).

9.7 Firmware history

Revision history

The firmware version (FW) on the nameplate and in the Operating Instructions indicates the device release: XX.YY.ZZ (example 01.02.01).

XX	Change to main version. No longer compatible. The device and Operating Instructions change.
YY	Change to functions and operation. Compatible. The Operating Instructions change.
ZZ	Fixes and internal changes. No changes to the Operating Instructions.

Date	Firmware version	Changes	Documentation
05/2020	03.01.zz	Original firmware	BA00191R/09/en/13.20

10 Maintenance and cleaning

No special maintenance work is required for the device.

A clean, dry cloth can be used to clean the device.

11 Repair

11.1 General information

Due to its design, the device cannot be repaired.

11.2 Spare parts

Spare parts currently available for the device can be found online at: http://www.products.endress.com/spareparts_consumables. Always quote the serial number of the device when ordering spare parts!

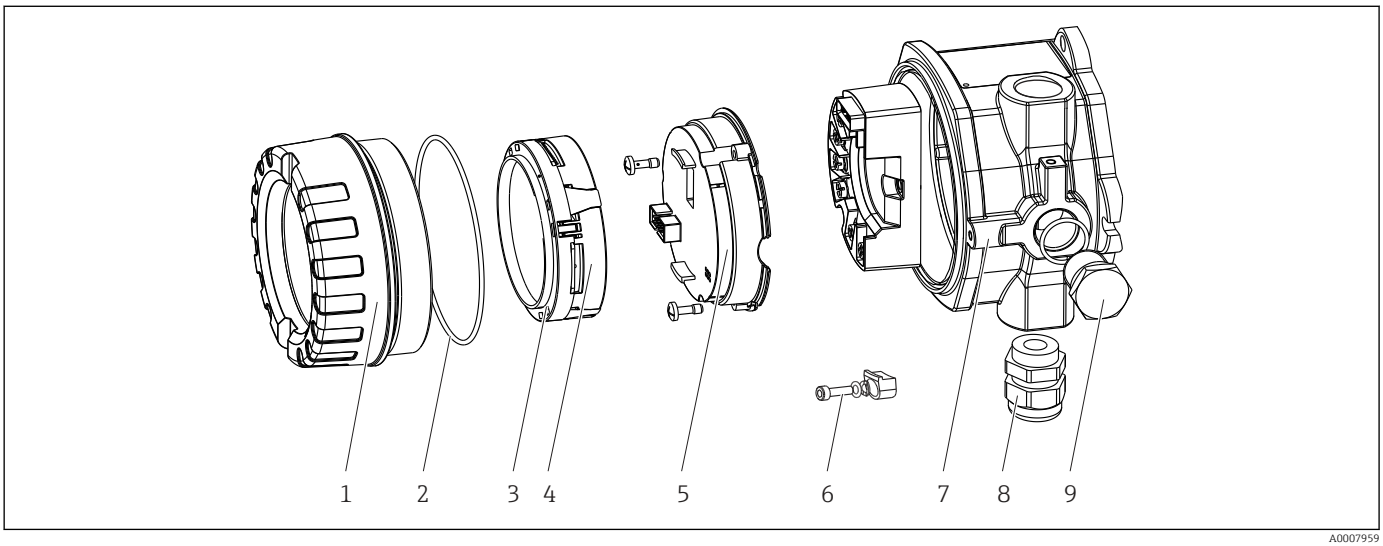

16 Field transmitter spare parts

Item No. 7	Housing			
	Certificate:			
	A	Non-hazardous area + Ex ia / IS		
	B	ATEX Ex d / XP		
		Material:		
		C	Aluminum, HART7	
		D	Stainless steel 316L, HART7	
			Cable entry:	
			1	3 x NPT ½" female thread + terminal block + 1 dummy plug

Item No. 7	Housing				
			2		3 x M20x1.5 female thread + terminal block + 1 dummy plug
			4		2x G ½" female thread + terminal block + 1 dummy plug
			5		M20x1.5 + M24x1.5 + terminal block + 1 dummy plug
			6		2x M20x1.5 female thread + terminal block + 1 dummy plug
				Version:	
				A	Standard
TMT142G-				**A**	**← order code**

Item No. 5	Electronics					
	Certificate:					
	A	Non-hazardous area, Ex d/XP				
	B	Ex ia / IS, intrinsic safety				
		Sensor input; communication; operation				
		B	1x; HART7, FW03.01.z, DevRev03; HART configuration			
		C	1x; HART7, FW03.01.z, DevRev03; HART/Bluetooth (app) configuration			
			Configuration			
			A	50 Hz mains filter		
				Service		
				I6	Configured as per original order (quote serial number)	
TMT142E-			**A**		**← order code**	

Item No.	Order code	Spare parts
3, 4	TMT142X-D1	Display HART7 + fitting kit + twist protection
3, 4	TMT142X-DC	Display fitting kit + twist protection
1	TMT142X-HA	Housing cover, blind, 316L Ex d, FM XP, CSA XP + seal
1	TMT142X-HB	Housing cover, blind, 316L + seal
1	TMT142X-HC	Housing cover cpl. for display, 316L, Ex d, FM XP, CSA XP + seal
1	TMT142X-HD	Housing cover cpl. for display, 316L + seal
1	TMT142X-HH	Housing cover, blind, aluminum Ex d, FM XP, + seal, CSA approval, only as cover of connection compartment
1	TMT142X-HI	Housing cover, blind, aluminum + seal
1	TMT142X-HK	Housing cover cpl. for display, aluminum Ex d + seal
1	TMT142X-HL	Housing cover cpl. for display, aluminum + seal
2	71439499	O-ring 88x3 HNBR 70° Shore PTFE coating
	71158816	O-ring 88x3 EPDM70 PTFE anti-friction coating
3	71310423	Display fitting kit, field housing (3 pcs), pack = 3 pieces
6	51004948	Cover clamp spare part set: screw, disk, spring washer
8	51004949	Cable gland M20x1.5
8	51006845	Cable gland NPT ½" D4-8.5, IP68
9	51004489	Plug (dummy) M20x1.5 Ex-d / XP
9	51004490	Plug (dummy) NPT ½", 1.0718
9	51004916	Plug (dummy) G ½", Ex-d / XP
9	51006888	Plug (dummy) NPT ½" V4A
-	51007995	Stainless steel mounting bracket for pipes 1.5" to 3", 316L

Item No.	Order code	Spare parts
-	51004387	Adapter for cable entry, NPT ½" / M20x1.5
-	51004915	Adapter M20x1.5 male/ M24x1.5 female VA
-	SERVICE-	Service
-	XPRFID-	RFID TAG as spare part only for devices with option L, RFID TAG identification Replaces RFID TAG consisting of: RFID TAG, fixing wire, crimping sleeve

11.3 Return

The requirements for safe device return can vary depending on the device type and national legislation.

1. Refer to the web page for information:
   http://www.endress.com/support/return-material
   ↳ Select the region.
2. Return the device if repairs or a factory calibration are required, or if the wrong device was ordered or delivered.

11.4 Disposal



If required by the Directive 2012/19/EU on waste electrical and electronic equipment (WEEE), the product is marked with the depicted symbol in order to minimize the disposal of WEEE as unsorted municipal waste. Do not dispose of products bearing this marking as unsorted municipal waste. Instead, return them to the manufacturer for disposal under the applicable conditions.

12 Accessories

Various accessories, which can be ordered with the device or subsequently from Endress +Hauser, are available for the device. Detailed information on the order code in question is available from your local Endress+Hauser sales center or on the product page of the Endress+Hauser website: www.endress.com.

Always quote the serial number of the device when ordering accessories!

12.1 Device-specific accessories

Accessories	Description
Dummy plug	▪ M20x1.5 Ex-d ▪ G ½" Ex-d ▪ ½" NPT
Cable glands	▪ M20x1.5 ▪ NPT ½" D4-8.5, IP68
Adapter for cable gland	M20x1.5 male/M24x1.5 female
Pipe mounting bracket	For 2" pipe 316L
Overvoltage protection	The module protects the electronics from overvoltage.

12.2 Communication-specific accessories

Accessories	Description
Commubox FXA195 HART	For intrinsically safe HART® communication with FieldCare via the USB interface. For details, see Technical Information TI404F.
Commubox FXA291	Connects Endress+Hauser field devices with a CDI interface (= Endress+Hauser Common Data Interface) and the USB port of a computer or laptop. For details, see Technical Information TI405C.
WirelessHART adapter	Is used for the wireless connection of field devices. The WirelessHART® adapter can be easily integrated into field devices and existing infrastructures, offers data protection and transmission safety and can be operated in parallel with other wireless networks. For details, see Operating Instructions BA061S
Field Xpert SMT70	Universal, high-performance tablet PC for device configuration The tablet PC enables mobile plant asset management in hazardous and non-hazardous areas. It is suitable for commissioning and maintenance staff to manage field instruments with a digital communication interface and to record progress. This tablet PC is designed as a comprehensive, all-in-one solution. With a pre-installed driver library, it is an easy-to-use, touch-sensitive tool which can be used to manage field instruments throughout their entire life cycle. For details, see Technical Information TI01342S.

12.3 Service-specific accessories

Accessories	Description
Applicator	Software for selecting and sizing Endress+Hauser measuring devices: ▪ Calculation of all the necessary data for identifying the optimum measuring device: e.g. pressure loss, accuracy or process connections. ▪ Graphic illustration of the calculation results Administration, documentation and access to all project-related data and parameters over the entire life cycle of a project. Applicator is available: Via the Internet: https://portal.endress.com/webapp/applicator

Accessories	Description
Configurator	Product Configurator - the tool for individual product configuration ▪ Up-to-the-minute configuration data ▪ Depending on the device: direct input of information specific to the measuring point, such as the measuring range or operating language ▪ Automatic verification of exclusion criteria ▪ Automatic creation of the order code and its breakdown in PDF or Excel output format ▪ Ability to order directly in the Endress+Hauser Online Shop The Product Configurator is available on the Endress+Hauser website: www.endress.com-> Select your country -> Click "Products" -> Select the product using the filters and search field -> Open product page -> The "Configure" button to the right of the product image opens the Product Configurator.

DeviceCare SFE100	Configuration tool for devices via fieldbus protocols and Endress+Hauser service protocols. DeviceCare is the tool developed by Endress+Hauser for the configuration of Endress+Hauser devices. All smart devices in a plant can be configured via a point-to-point or point-to-bus connection. The user-friendly menus enable transparent and intuitive access to the field devices. For details, see Operating Instructions BA00027S

FieldCare SFE500	FDT-based plant asset management tool from Endress+Hauser. It can configure all smart field units in your system and helps you manage them. By using the status information, it is also a simple but effective way of checking their status and condition. For details, see Operating Instructions BA00027S and BA00065S

12.4 System products

Accessories	Description
RN22	Single- or two-channel active barrier for safe separation of 0/4 to 20 mA standard signal circuits with bidirectional HART® transmission. In the signal duplicator option, the input signal is transmitted to two galvanically isolated outputs. The device has one active and one passive current input; the outputs can be operated actively or passively. The RN22 requires a supply voltage of 24 V_{DC}. For details, see Technical Information TI01515K.
RN42	Single-channel active barrier for safe separation of 0/4 to 20 mA standard signal circuits with bidirectional HART® transmission. The device has one active and one passive current input; the outputs can be operated actively or passively. The RN42 can be powered with a wide range voltage of 24 to 230 $V_{AC/DC}$. For details, see Technical Information TI01584K.
RIA15	Process indicator, digital loop-powered display for 4 to 20 mA circuit, panel mounting, with optional HART® communication. Displays 4 to 20 mA or up to 4 HART® process variables For details, see Technical Information TI01043K.
Graphic Data Manager Memograph M	The Advanced Data Manager Memograph M is a flexible and powerful system for organizing process values. Optional HART® input cards are available, each with 4 inputs (4/8/12/16/20), with highly accurate process values from the HART® devices directly connected for the purpose of calculation and data logging. The measured process values are clearly presented on the display and logged safely, monitored for limit values and analyzed. Via common communication protocols, the measured and calculated values can be easily communicated to higher-level systems or individual plant modules can be interconnected. For details, see Technical Information TI01180R.

13 Technical data

13.1 Input

Measured variable: Temperature (temperature-linear transmission behavior), resistance and voltage.

Resistance thermometer (RTD) as per standard	Designation	α	Measuring range limits	Min. span
IEC 60751:2008	Pt100 (1) Pt200 (2) Pt500 (3) Pt1000 (4)	0.003851	−200 to +850 °C (−328 to +1 562 °F) −200 to +850 °C (−328 to +1 562 °F) −200 to +500 °C (−328 to +932 °F) −200 to +250 °C (−328 to +482 °F)	10 K (18 °F)
JIS C1604:1984	Pt100 (5)	0.003916	−200 to +510 °C (−328 to +950 °F)	10 K (18 °F)
DIN 43760 IPTS-68	Ni100 (6) Ni120 (7)	0.006180	−60 to +250 °C (−76 to +482 °F) −60 to +250 °C (−76 to +482 °F)	10 K (18 °F)
GOST 6651-94	Pt50 (8) Pt100 (9)	0.003910	−185 to +1 100 °C (−301 to +2 012 °F) −200 to +850 °C (−328 to +1 562 °F)	10 K (18 °F)
OIML R84: 2003, GOST 6651-2009	Cu50 (10) Cu100 (11)	0.004280	−180 to +200 °C (−292 to +392 °F) −180 to +200 °C (−292 to +392 °F)	10 K (18 °F)
	Ni100 (12) Ni120 (13)	0.006170	−60 to +180 °C (−76 to +356 °F) −60 to +180 °C (−76 to +356 °F)	10 K (18 °F)
OIML R84: 2003, GOST 6651-94	Cu50 (14)	0.004260	−50 to +200 °C (−58 to +392 °F)	10 K (18 °F)
-	Pt100 (Callendar van Dusen) Nickel polynomial Copper polynomial	-	The measuring range limits are specified by entering the limit values that depend on the coefficients A to C and R0.	10 K (18 °F)
	▪ Connection type: 2-wire, 3-wire or 4-wire connection, sensor current: ≤ 0.3 mA ▪ With 2-wire circuit, compensation of wire resistance possible (0 to 30 Ω) ▪ With 3-wire and 4-wire connection, sensor wire resistance up to max. 50 Ω per wire			
Resistance transmitter	Resistance Ω		10 to 400 Ω 10 to 2 000 Ω	10 Ω 10 Ω

Thermocouples as per standard	Designation	Measuring range limits		Min. span
IEC 60584, Part 1 ASTM E230-3	Type A (W5Re-W20Re) (30) Type B (PtRh30-PtRh6) (31) Type E (NiCr-CuNi) (34) Type J (Fe-CuNi) (35) Type K (NiCr-Ni) (36) Type N (NiCrSi-NiSi) (37) Type R (PtRh13-Pt) (38) Type S (PtRh10-Pt) (39) Type T (Cu-CuNi) (40)	0 to +2 500 °C (+32 to +4 532 °F) +40 to +1 820 °C (+104 to +3 308 °F) −250 to +1 000 °C (−482 to +1 832 °F) −210 to +1 200 °C (−346 to +2 192 °F) −270 to +1 372 °C (−454 to +2 501 °F) −270 to +1 300 °C (−454 to +2 372 °F) −50 to +1 768 °C (−58 to +3 214 °F) −50 to +1 768 °C (−58 to +3 214 °F) −200 to +400 °C (−328 to +752 °F)	Recommended temperature range: 0 to +2 500 °C (+32 to +4 532 °F) +500 to +1 820 °C (+932 to +3 308 °F) −150 to +1 000 °C (−238 to +1 832 °F) −150 to +1 200 °C (−238 to +2 192 °F) −150 to +1 200 °C (−238 to +2 192 °F) −150 to +1 300 °C (−238 to +2 372 °F) +50 to +1 768 °C (+122 to +3 214 °F) +50 to +1 768 °C (+122 to +3 214 °F) −150 to +400 °C (−238 to +752 °F)	50 K (90 °F) 50 K (90 °F) 50 K (90 °F) 50 K (90 °F) 50 K (90 °F) 50 K (90 °F) 50 K (90 °F) 50 K (90 °F) 50 K (90 °F)
IEC 60584, Part 1 ASTM E230-3 ASTM E988-96	Type C (W5Re-W26Re) (32)	0 to +2 315 °C (+32 to +4 199 °F)	0 to +2 000 °C (+32 to +3 632 °F)	50 K (90 °F)
ASTM E988-96	Type D (W3Re-W25Re) (33)	0 to +2 315 °C (+32 to +4 199 °F)	0 to +2 000 °C (+32 to +3 632 °F)	50 K (90 °F)
DIN 43710	Type L (Fe-CuNi) (41) Type U (Cu-CuNi) (42)	−200 to +900 °C (−328 to +1 652 °F) −200 to +600 °C (−328 to +1 112 °F)	−150 to +900 °C (−238 to +1 652 °F) −150 to +600 °C (−238 to +1 112 °F)	50 K (90 °F)
GOST R8.585-2001	Type L (NiCr-CuNi) (43)	−200 to +800 °C (−328 to +1 472 °F)	−200 to +800 °C (+328 to +1 472 °F)	50 K (90 °F)

Thermocouples as per standard	Designation	Measuring range limits	Min. span
	▪ Reference junction: internal, with preset value −40 to +85 °C (−40 to +185 °F) or with external sensor ▪ Maximum sensor wire resistance 10 kΩ (If the sensor wire resistance is greater than 10 kΩ, an error message is output in accordance with NAMUR NE89.)		
Voltage transmitter (mV)	Millivolt transmitter (mV)	−20 to 100 mV	5 mV

13.2 Output

Output signal

Analog output	4 to 20 mA, 20 to 4 mA (can be inverted)
Signal encoding	FSK ±0.5 mA via current signal
Data transmission rate	1200 baud
Galvanic isolation	U = 2 kV AC for 1 minute (input/output)

Failure information

Failure information as per NAMUR NE43:

Failure information is created if the measuring information is missing or not valid. A complete list of all the errors occurring in the measuring system is created.	
Underranging	Linear decrease from 4.0 to 3.8 mA
Overranging	Linear increase from 20.0 to 20.5 mA
Failure e.g. sensor failure; sensor short-circuit	≤ 3.6 mA ("low") or ≥ 21 mA ("high"), can be selected The "high" alarm setting can be set between 21.5 mA and 23 mA, thus providing the flexibility needed to meet the requirements of various control systems.

Load

Load $R_{b\,max.} = (U_{b\,max.} - 11\ V) / 0.023\ A$ (current output).

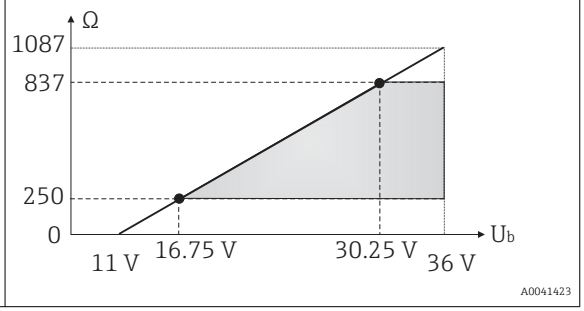

Linearization/transmission behavior

Temperature-linear, resistance-linear, voltage-linear

Network frequency filter

50/60 Hz

Filter

1st order digital filter: 0 to 120 s

Protocol-specific data

Manufacturer ID	17 (0x11)
Device type ID	0x11D1
HART® specification	7
Device address in multi-drop mode	Software setting addresses 0 to 63

Device description files (DTM, DD)	Information and files under: www.endress.com www.fieldcommgroup.org
HART load	min. 250 Ω
HART device variables	**Measured value for primary value (PV)** Sensor (measured value) **Measured values for SV, TV, QV (secondary, tertiary and quaternary variable)** ▪ SV: device temperature ▪ TV: sensor (measured value) ▪ QV: sensor (measured value)
Supported functions	▪ Squawk ▪ Condensed status

Wireless HART data

Minimum starting voltage	11 V_{DC}
Start-up current	3.58 mA
Start-up time until HART communication is possible	2 s
Start-up time until measured value is available	7 s
Minimum operating voltage	11 V_{DC}
Multidrop current	4.0 mA

Write protection for device parameters
- Hardware: write protection via DIP switch
- Software: user role-based concept (password assignment)

Switch-on delay
- ≤ 2 s until the start of HART® communication.
- ≤ 7 s until the first valid measured value signal is present at the current output.

While switch-on delay: I_a ≤ 3.8 mA.

13.3 Power supply

Supply voltage

Values for non-hazardous areas, protected against polarity reversal:
U = 11 to 36 V_{DC} (standard)

Values for hazardous areas, see Ex documentation → 60

Current consumption

Current consumption	3.6 to 23 mA
Minimum current consumption	≤ 3.5 mA, Multidrop mode 4 mA
Current limit	≤ 23 mA

Terminals

2.5 mm^2 (12 AWG) plus ferrule

Overvoltage protection

The surge arrester can be ordered as an optional extra. The module protects the electronics from damage from overvoltage. Overvoltage occurring in signal cables (e.g. 4 to 20 mA,

communication lines (fieldbus systems) and power supply is diverted to ground. The functionality of the transmitter is not affected as no problematic voltage drop occurs.

Connection data:

Maximum continuous voltage (rated voltage)	U_C = 36 V_{DC}
Nominal current	I = 0.5 A at $T_{amb.}$ = 80 °C (176 °F)
Surge current resistance ▪ Lightning surge current D1 (10/350 µs) ▪ Nominal discharge current C1/C2 (8/20 µs)	 ▪ I_{imp} = 1 kA (per wire) ▪ I_n = 5 kA (per wire) I_n = 10 kA (total)
Series resistance per wire	1.8 Ω, tolerance ±5 %

13.4 Performance characteristics

Response time

Resistance thermometer (RTD) and resistance transmitter (Ω measurement)	≤ 1 s
Thermocouples (TC) and voltage transmitters (mV)	≤ 1 s
Reference temperature	≤ 1 s

When recording step responses, it must be taken into account that the times of the internal reference measuring point are added to the specified times where applicable.

Reference operating conditions

- Calibration temperature: +25 °C ±3 K (77 °F ±5.4 °F)
- Supply voltage: 24 V DC
- 4-wire circuit for resistance adjustment

Maximum measured error

In accordance with DIN EN 60770 and the reference conditions specified above. The measured error data correspond to ±2 σ (Gaussian distribution). The data include non-linearities and repeatability.

ME = Measured error

MV = Measured value

LRV = Lower range value of relevant sensor

Typical

Standard	Designation	Measuring range	Typical measured error (±)	
Resistance thermometer (RTD) as per standard			Digital value [1]	Value at current output
IEC 60751:2008	Pt100 (1)	0 to +200 °C (32 to +392 °F)	0.08 °C (0.14 °F)	0.1 °C (0.18 °F)
IEC 60751:2008	Pt1000 (4)		0.14 °C (0.25 °F)	0.15 °C (0.27 °F)
GOST 6651-94	Pt100 (9)		0.08 °C (0.14 °F)	0.1 °C (0.18 °F)
Thermocouples (TC) as per standard			Digital value [1]	Value at current output
IEC 60584, Part 1	Type K (NiCr-Ni) (36)	0 to +800 °C (32 to +1 472 °F)	0.41 °C (0.74 °F)	0.47 °C (0.85 °F)
IEC 60584, Part 1	Type S (PtRh10-Pt) (39)		1.83 °C (3.29 °F)	1.84 °C (3.31 °F)
GOST R8.585-2001	Type L (NiCr-CuNi) (43)		2.45 °C (4.41 °F)	2.46 °C (4.43 °F)

1) Measured value transmitted via HART®.

Measured error for resistance thermometers (RTD) and resistance transmitters

Standard	Designation	Measuring range	Measured error (±)	
			Digital [1]	D/A [2]
			Based on measured value [3]	
IEC 60751:2008	Pt100 (1)	−200 to +850 °C (−328 to +1 562 °F)	ME = ± (0.06 °C (0.11 °F) + 0.006% * (MV - LRV))	0.03 % (≙ 4.8 µA)
	Pt200 (2)		ME = ± (0.13 °C (0.234 °F) + 0.011% * (MV - LRV))	
	Pt500 (3)	−200 to +510 °C (−328 to +950 °F)	ME = ± (0.19 °C (0.342 °F) + 0.008% * (MV - LRV))	
	Pt1000 (4)	−200 to +500 °C (−328 to +932 °F)	ME = ± (0.11 °C (0.198 °F) + 0.007% * (MV - LRV))	
JIS C1604:1984	Pt100 (5)	−200 to +510 °C (−328 to +950 °F)	ME = ± (0.11 °C (0.198 °F) + 0.006% * (MV - LRV))	
GOST 6651-94	Pt50 (8)	−185 to +1 100 °C (−301 to +2 012 °F)	ME = ± (0.15 °C (0.27 °F) + 0.008% * (MV - LRV))	
	Pt100 (9)	−200 to +850 °C (−328 to +1 562 °F)	ME = ± (0.06 °C (0.11 °F) + 0.006% * (MV - LRV))	0.03 % (≙ 4.8 µA)
DIN 43760 IPTS-68	Ni100 (6)	−60 to +250 °C (−76 to +482 °F)	ME = ± (0.11 °C (0.198 °F) - 0.004% * (MV- LRV))	
	Ni120 (7)			
OIML R84: 2003 / GOST 6651-2009	Cu50 (10)	−180 to +200 °C (−292 to +392 °F)	ME = ± (0.13 °C (0.234 °F) + 0.006% * (MV - LRV))	
	Cu100 (11)	−180 to +200 °C (−292 to +392 °F)	ME = ± (0.14 °C (0.252 °F) + 0.003% * (MV - LRV))	
	Ni100 (12)	−60 to +180 °C (−76 to +356 °F)	ME = ± (0.16 °C (0.288 °F) - 0.004% * (MV- LRV))	
	Ni120 (13)		ME = ± (0.11 °C (0.198 °F) - 0.004% * (MV- LRV))	
OIML R84: 2003, GOST 6651-94	Cu50 (14)	−50 to +200 °C (−58 to +392 °F)	ME = ± (0.14 °C (0.252 °F) + 0.004% * (MV - LRV))	
Resistance transmitter	Resistance Ω	10 to 400 Ω	ME = ± 37 mΩ + 0.0032 % * MV	0.03 % (≙ 4.8 µA)
		10 to 2 000 Ω	ME = ± 180 mΩ + 0.006 % * MV	

1) Measured value transmitted via HART®.
2) Percentages based on the configured span of the analog output signal.
3) Deviations from maximum measured error possible due to rounding.

Measured error for thermocouples (TC) and voltage transmitters

Standard	Designation	Measuring range	Measured error (±)	
			Digital [1]	D/A [2]
			Based on measured value [3]	
IEC 60584-1 / ASTM E230-3	Type A (30)	0 to +2 500 °C (+32 to +4 532 °F)	ME = ± (1.0 °C (1.8 °F) + 0.026% * (MV - LRV))	0.03 % (≙ 4.8 µA)
	Type B (31)	+500 to +1 820 °C (+932 to +3 308 °F)	ME = ± (3.0 °C (5.4 °F) - 0.09% * (MV - LRV))	
IEC 60584-1 / ASTM E230-3 ASTM E988-96	Type C (32)	0 to +2 000 °C (+32 to +3 632 °F)	ME = ± (0.9 °C (1.62 °F) + 0.0055% * (MV - LRV))	
ASTM E988-96	Type D (33)		ME = ± (1.1 °C (1.98 °F) - 0.016% * (MV - LRV))	
IEC 60584-1 / ASTM E230-3	Type E (34)	−150 to +1 000 °C (−238 to +1 832 °F)	ME = ± (0.4 °C (0.72 °F) - 0.012% * (MV - LRV))	
	Type J (35)	−150 to +1 200 °C (−238 to +2 192 °F)	ME = ± (0.5 °C (0.9 °F) - 0.01% * (MV - LRV))	
	Type K (36)			
	Type N (37)	−150 to +1 300 °C (−238 to +2 372 °F)	ME = ± (0.7 °C (1.26 °F) - 0.025% * (MV - LRV))	0.03 % (≙ 4.8 µA)
	Type R (38)	+50 to +1 768 °C (+122 to +3 214 °F)	ME = ± (1.6 °C (2.88 °F) - 0.04% * (MV - LRV))	
	Type S (39)		ME = ± (1.6 °C (2.88 °F) - 0.03% * (MV - LRV))	

Standard	Designation	Measuring range	Measured error (±)	
			Digital [1]	D/A [2]
DIN 43710	Type T (40)	−150 to +400 °C (−238 to +752 °F)	ME = ± (0.5 °C (0.9 °F) - 0.05% * (MV - LRV))	
	Type L (41)	−150 to +900 °C (−238 to +1652 °F)	ME = ± (0.5 °C (0.9 °F) - 0.016% * (MV - LRV))	
	Type U (42)	−150 to +600 °C (−238 to +1112 °F)	ME = ± (0.5 °C (0.9 °F) - 0.025% * (MV - LRV))	
GOST R8.585-2001	Type L (43)	−200 to +800 °C (−328 to +1472 °F)	ME = ± (2.3 °C (4.14 °F) - 0.015% * (MV - LRV))	
Voltage transmitter (mV)		−20 to +100 mV	ME = ± 10.0 µV	4.8 µA

1) Measured value transmitted via HART®.
2) Percentages based on the configured span of the analog output signal.
3) Deviations from maximum measured error possible due to rounding.

Total measured error of transmitter at current output = √(Measured error digital² + Measured error D/A²)

Sample calculation with Pt100, measuring range 0 to +200 °C (+32 to +392 °F), ambient temperature +25 °C (+77 °F), supply voltage 24 V:

Measured error digital = 0.09 °C + 0.006% x (200 °C - (-200 °C)):	0.08 °C (0.14 °F)
Measured error D/A = 0.03 % x 200 °C (360 °F)	0.06 °C (0.11 °F)
Measured error digital value (HART):	0.08 °C (0.14 °F)
Measured error analog value (current output): √(Measured error digital² + Measured error D/A²)	0.1 °C (0.18 °F)

Sample calculation with Pt100, measuring range 0 to +200 °C (+32 to +392 °F), ambient temperature +35 °C (+95 °F), supply voltage 30 V:

Measured error digital = 0.04 °C + 0.006% x (200 °C - (-200 °C)):	0.08 °C (0.14 °F)
Measured error D/A = 0.03 % x 200 °C (360 °F)	0.06 °C (0.11 °F)
Influence of ambient temperature (digital) = (35 - 25) x (0.0013 % x 200 °C - (-200 °C)), min. 0.003 °C	0.05 °C (0.09 °F)
Influence of ambient temperature (D/A) = (35 - 25) x (0.03% x 200 °C)	0.06 °C (0.11 °F)
Influence of supply voltage (digital) = (30 - 24) x (0.0007% x 200 °C - (-200 °C)), min. 0.005 °C	0.02 °C (0.04 °F)
Influence of supply voltage (D/A) = (30 - 24) x (0.03% x 200 °C)	0.04 °C (0.72 °F)
Measured error digital value (HART): √[(Measured error digital² + Influence of ambient temperature (digital)² + Influence of supply voltage (digital)²]	**0.10 °C (0.14 °F)**
Measured error analog value (current output): √[(Measured error digital² + Measured error D/A² + Influence of ambient temperature (digital)² + Influence of ambient temperature (D/A)² + Influence of supply voltage (digital)² + Influence of supply voltage (D/A)²]	**0.13 °C (0.23 °F)**

The measured error data correspond to 2 σ (Gaussian distribution)

Physical input measuring range of sensors	
10 to 400 Ω	Cu50, Cu100, polynomial RTD, Pt50, Pt100, Ni100, Ni120

10 to 2 000 Ω	Pt200, Pt500
–20 to 100 mV	Thermocouples type: A, B, C, D, E, J, K, L, N, R, S, T, U

Sensor adjustment

Sensor-transmitter-matching

RTD sensors are one of the most linear temperature measuring elements. Nevertheless, the output must be linearized. To significantly improve temperature measurement accuracy, the device allows the use of two methods:

- Callendar-Van Dusen coefficients (Pt100 resistance thermometer)
  The Callendar-Van Dusen equation is described as:
  $R_T = R_0[1+AT+BT^2+C(T-100)T^3]$

  The coefficients A, B and C are used to match the sensor (platinum) and transmitter in order to improve the accuracy of the measuring system. The coefficients for a standard sensor are specified in IEC 751. If no standard sensor is available or if greater accuracy is required, the coefficients for each sensor can be determined specifically with the aid of sensor calibration.

- Linearization for copper/nickel resistance thermometers (RTD)
  The polynomial equation for copper/nickel is as follows:
  $R_T = R_0(1+AT+BT^2)$

  The coefficients A and B are used for the linearization of nickel or copper resistance thermometers (RTD). The exact values of the coefficients derive from the calibration data and are specific to each sensor. The sensor-specific coefficients are then sent to the transmitter.

Sensor-transmitter-matching using one of the methods explained above significantly improves the temperature measurement accuracy of the entire system. This is because the transmitter uses the specific data pertaining to the connected sensor to calculate the measured temperature, instead of using the standardized sensor curve data.

1-point adjustment (offset)

Shifts the sensor value

Current output adjustment

Correction of the 4 and/or 20 mA current output value.

Operating influences

The measured error data correspond to 2 σ (Gaussian distribution).

Influence of ambient temperature and supply voltage on operation for resistance thermometers (RTD) and resistance transmitters

Designation	Standard	Ambient temperature: Influence (±) per 1 °C (1.8 °F) change			Supply voltage: Influence (±) per 1 V change		
		Digital [1]		D/A [2]	Digital [1]		D/A [2]
		Maximum	Based on measured value		Maximum	Based on measured value	
Pt100 (1)	IEC 60751:2008	≤ 0.013 °C (0.023 °F)	0.0013% * (MV - LRV), at least 0.003 °C (0.005 °F)	0.003 %	≤ 0.007 °C (0.013 °F)	0.0007% * (MV - LRV), at least 0.003 °C (0.005 °F)	0.003 %
Pt200 (2)		≤ 0.017 °C (0.031 °F)	-		≤ 0.009 °C (0.016 °F)	-	
Pt500 (3)		≤ 0.008 °C (0.014 °F)	0.0013% * (MV - LRV), at least 0.006 °C (0.011 °F)		≤ 0.004 °C (0.007 °F)	0.0007% * (MV - LRV), at least 0.006 °C (0.011 °F)	
Pt1000 (4)		≤ 0.005 °C (0.009 °F)	-		≤ 0.003 °C (0.005 °F)	-	

Designation	Standard	Ambient temperature: Influence (±) per 1 °C (1.8 °F) change			Supply voltage: Influence (±) per 1 V change		
		Digital [1]		D/A [2]	Digital [1]		D/A [2]
Pt100 (5)	JIS C1604:1984	≤ 0.009 °C (0.016 °F)	0.0013% * (MV - LRV), at least 0.003 °C (0.005 °F)		≤ 0.004 °C (0.007 °F)	0.0007% * (MV - LRV), at least 0.003 °C (0.005 °F)	
Pt50 (8)	GOST 6651-94	≤ 0.017 °C (0.031 °F)	0.0015% * (MV - LRV), at least 0.01 °C (0.018 °F)		≤ 0.009 °C (0.016 °F)	0.0007% * (MV - LRV), at least 0.01 °C (0.018 °F)	
Pt100 (9)		≤ 0.013 °C (0.023 °F)	0.0013% * (MV - LRV), at least 0.003 °C (0.005 °F)		≤ 0.007 °C (0.013 °F)	0.0007% * (MV - LRV), at least 0.003 °C (0.005 °F)	
Ni100 (6)	DIN 43760 IPTS-68	≤ 0.003 °C (0.005 °F)	-	0.003 %	≤ 0.001 °C (0.002 °F)	-	0.003 %
Ni120 (7)			-			-	
Cu50 (10)	OIML R84: 2003 / GOST 6651-2009	≤ 0.005 °C (0.009 °F)	-		≤ 0.002 °C (0.004 °F)	-	
Cu100 (11)		≤ 0.004 °C (0.007 °F)	-			-	
Ni100 (12)		≤ 0.003 °C (0.005 °F)	-		≤ 0.001 °C (0.002 °F)	-	
Ni120 (13)			-			-	
Cu50 (14)	OIML R84: 2003 / GOST 6651-94	≤ 0.005 °C (0.009 °F)	-		≤ 0.002 °C (0.004 °F)	-	
Resistance transmitter (Ω)							
10 to 400 Ω		≤ 4 mΩ	0.001% * MV, at least 1 mΩ	0.003 %	≤ 2 mΩ	0.0005% * MV, at least 1 mΩ	0.003 %
10 to 2 000 Ω		≤ 20 mΩ	0.001% * MV, at least 10 mΩ		≤ 10 mΩ	0.0005% * MV, at least 5 mΩ	

1) Measured value transmitted via HART®.
2) Percentages based on the configured span of the analog output signal

Influence of ambient temperature and supply voltage on operation for thermocouples (TC) and voltage transmitters

Designation	Standard	Ambient temperature: Influence (±) per 1 °C (1.8 °F) change			Supply voltage: Influence (±) per 1 V change		
		Digital [1]		D/A [2]	Digital		D/A [2]
		Maximum	Based on measured value		Maximum	Based on measured value	
Type A (30)	IEC 60584-1/ ASTM E230-3	≤ 0.07 °C (0.126 °F)	0.003% * (MV - LRV), at least 0.01 °C (0.018 °F)	0.003 %	≤ 0.03 °C (0.054 °F)	0.0012% * (MV - LRV), at least 0.013 °C (0.023 °F)	0.003 %
Type B (31)		≤ 0.04 °C (0.072 °F)	-		≤ 0.02 °C (0.036 °F)	-	
Type C (32)	IEC 60584-1 / ASTM E230-3 ASTM E988-96	≤ 0.04 °C (0.072 °F)	0.0021% * (MV - LRV), at least 0.01 °C (0.018 °F)		≤ 0.02 °C (0.036 °F)	0.0012% * (MV - LRV), at least 0.013 °C (0.023 °F)	
Type D (33)	ASTM E988-96	≤ 0.04 °C (0.072 °F)	0.0019% * (MV - LRV), at least 0.01 °C (0.018 °F)		≤ 0.02 °C (0.036 °F)	0.0011% * (MV - LRV), at least 0.0 °C (0.0 °F)	
Type E (34)	IEC 60584-1 / ASTM E230-3	≤ 0.02 °C (0.036 °F)	0.0014% * (MV - LRV), at least 0.0 °C (0.0 °F)		≤ 0.01 °C (0.018 °F)	0.0008% * (MV - LRV), at least 0.0 °C (0.0 °F)	
Type J (35)			0.0014% * (MV - LRV), at least 0.0 °C (0.0 °F)			0.0008% * MV, at least 0.0 °C (0.0 °F)	
Type K (36)		≤ 0.02 °C (0.036 °F)	0.0015% * (MV - LRV), at least 0.0 °C (0.0 °F)		≤ 0.01 °C (0.018 °F)	0.0009% * (MV - LRV), at least 0.0 °C (0.0 °F)	
Type N (37)			0.0014% * (MV - LRV), at least 0.010 °C (0.018 °F)	0.003 %		0.0008% * MV, at least 0.0 °C (0.0 °F)	0.003 %

Designation	Standard	Ambient temperature: Influence (±) per 1 °C (1.8 °F) change			Supply voltage: Influence (±) per 1 V change		
		Digital [1]		D/A [2]	Digital		D/A [2]
Type R (38)		≤ 0.03 °C (0.054 °F)	-		≤ 0.02 °C (0.036 °F)	-	
Type S (39)			-			-	
Type T (40)		≤ 0.01 °C (0.018 °F)	-		0.0 °C (0.0 °F)	-	
Type L (41)	DIN 43710		-		≤ 0.01 °C (0.018 °F)	-	
Type U (42)	DIN 43710		-		0.0 °C (0.0 °F)	-	
Type L (43)	GOST R8.585-2001		-		≤ 0.01 °C (0.018 °F)	-	
Voltage transmitter (mV)				0.003 %			0.003 %
−20 to 100 mV	-	≤ 1.5 µV	0.0015% * MV		≤ 0.8 µV	0.0008% * MV	

1) Measured value transmitted via HART®.
2) Percentages based on the configured span of the analog output signal

MV = Measured value

LRV = Lower range value of relevant sensor

Total measured error of transmitter at current output = √(Measured error digital² + Measured error D/A²)

Long-term drift, resistance thermometers (RTD) and resistance transmitters

Designation	Standard	Long-term drift (±) [1]				
		after 1 month	after 6 months	after 1 year	after 3 years	after 5 years
		Based on measured value				
Pt100 (1)	IEC 60751:2008	≤ 0.039% * (MV - LRV) or 0.01 °C (0.02 °F)	≤ 0.061% * (MV - LRV) or 0.02 °C (0.04 °F)	≤ 0.007% * (MV - LRV) or 0.02 °C (0.04 °F)	≤ 0.0093% * (MV - LRV) or 0.03 °C (0.05 °F)	≤ 0.0102% * (MV - LRV) or 0.03 °C (0.05 °F)
Pt200 (2)		0.05 °C (0.09 °F)	0.08 °C (0.14 °F)	0.09 °C (0.17 °F)	0.12 °C (0.27 °F)	0.13 °C (0.24 °F)
Pt500 (3)		≤ 0.048% * (MV - LRV) or 0.01 °C (0.02 °F)	≤ 0.0075% * (MV - LRV) or 0.02 °C (0.04 °F)	≤ 0.086% * (MV - LRV) or 0.03 °C (0.06 °F)	≤ 0.011% * (MV - LRV) or 0.03 °C (0.05 °F)	≤ 0.0124% * (MV - LRV) or 0.04 °C (0.07 °F)
Pt1000 (4)			≤ 0.0077% * (MV - LRV) or 0.02 °C (0.04 °F)	≤ 0.0088% * (MV - LRV) or 0.02 °C (0.04 °F)	≤ 0.0114% * (MV - LRV) or 0.03 °C (0.05 °F)	≤ 0.013% * (MV - LRV) or 0.03 °C (0.05 °F)
Pt100 (5)	JIS C1604:1984	≤ 0.039% * (MV - LRV) or 0.01 °C (0.02 °F)	≤ 0.0061% * (MV - LRV) or 0.02 °C (0.04 °F)	≤ 0.007% * (MV - LRV) or 0.02 °C (0.04 °F)	≤ 0.0093% * (MV - LRV) or 0.03 °C (0.05 °F)	≤ 0.0102% * (MV - LRV) or 0.03 °C (0.05 °F)
Pt50 (8)	GOST 6651-94	≤ 0.042% * (MV - LRV) or 0.02 °C (0.04 °F)	≤ 0.0068% * (MV - LRV) or 0.04 °C (0.07 °F)	≤ 0.0076% * (MV - LRV) or 0.04 °C (0.08 °F)	≤ 0.01% * (MV - LRV) or 0.06 °C (0.11 °F)	≤ 0.011% * (MV - LRV) or 0.07 °C (0.12 °F)
Pt100 (9)		≤ 0.039% * (MV - LRV) or 0.011 °C (0.012 °F)	≤ 0.0061% * (MV - LRV) or 0.02 °C (0.04 °F)	≤ 0.007% * (MV - LRV) or 0.02 °C (0.04 °F)	≤ 0.0093% * (MV - LRV) or 0.03 °C (0.05 °F)	≤ 0.0102% * (MV - LRV) or 0.03 °C (0.05 °F)
Ni100 (6)	DIN 43760 IPTS-68	0.01 °C (0.02 °F)	0.01 °C (0.02 °F)	0.02 °C (0.04 °F)	0.02 °C (0.04 °F)	0.02 °C (0.04 °F)
Ni120 (7)						
Cu50 (10)	OIML R84: 2003 / GOST 6651-2009	0.02 °C (0.04 °F)	0.03 °C (0.05 °F)	0.04 °C (0.07 °F)	0.05 °C (0.09 °F)	0.05 °C (0.09 °F)
Cu100 (11)		0.01 °C (0.02 °F)	0.02 °C (0.04 °F)	0.02 °C (0.04 °F)	0.03 °C (0.05 °F)	0.04 °C (0.07 °F)

Designation	Standard	Long-term drift (±) [1]				
Ni100 (12)			0.01 °C (0.02 °F)	0.02 °C (0.04 °F)	0.02 °C (0.04 °F)	0.02 °C (0.04 °F)
Ni120 (13)						
Cu50 (14)	OIML R84: 2003 / GOST 6651-94	0.02 °C (0.04 °F)	0.03 °C (0.05 °F)	0.04 °C (0.07 °F)	0.05 °C (0.09 °F)	0.05 °C (0.09 °F)
Resistance transmitter						
10 to 400 Ω		≤ 0.003% * MV or 4 mΩ	≤ 0.0048% * MV or 6 mΩ	≤ 0.0055% * MV or 7 mΩ	≤ 0.0073% * MV or 10 mΩ	≤ 0.008% * (MV - LRV) or 11 mΩ
10 to 2 000 Ω		≤ 0.0038% * MV or 25 mΩ	≤ 0.006% * MV or 40 mΩ	≤ 0.007% * (MV - LRV) or 47 mΩ	≤ 0.009% * (MV - LRV) or 60 mΩ	≤ 0.0067% * (MV - LRV) or 67 mΩ

1) The larger value is valid

Long-term drift, thermocouples (TC) and voltage transmitters

Designation	Standard	Long-term drift (±) [1]				
		after 1 month	after 6 months	after 1 year	after 3 years	after 5 years
		Based on measured value				
Type A (30)	IEC 60584-1 / ASTM E230-3	≤ 0.021% * (MV - LRV) or 0.34 °C (0.61 °F)	≤ 0.037% * (MV - LRV) or 0.59 °C (1.06 °F)	≤ 0.044% * (MV - LRV) or 0.70 °C (1.26 °F)	≤ 0.058% * (MV - LRV) or 0.93 °C (1.67 °F)	≤ 0.063% * (MV - LRV) or 1.01 °C (1.82 °F)
Type B (31)		0.80 °C (1.44 °F)	1.40 °C (2.52 °F)	1.66 °C (2.99 °F)	2.19 °C (3.94 °F)	2.39 °C (4.30 °F)
Type C (32)	IEC 60584-1 / ASTM E230-3 ASTM E988-96	0.34 °C (0.61 °F)	0.58 °C (1.04 °F)	0.70 °C (1.26 °F)	0.92 °C (1.66 °F)	1.00 °C (1.80 °F)
Type D (33)	ASTM E988-96	0.42 °C (0.76 °F)	0.73 °C (1.31 °F)	0.87 °C (1.57 °F)	1.15 °C (2.07 °F)	1.26 °C (2.27 °F)
Type E (34)	IEC 60584-1 / ASTM E230-3	0.13 °C (0.23 °F)	0.22 °C (0.40 °F)	0.26 °C (0.47 °F)	0.34 °C (0.61 °F)	0.37 °C (0.67 °F)
Type J (35)		0.15 °C (0.27 °F)	0.26 °C (0.47 °F)	0.31 °C (0.56 °F)	0.41 °C (0.74 °F)	0.44 °C (0.79 °F)
Type K (36)		0.17 °C (0.31 °F)	0.30 °C (0.54 °F)	0.36 °C (0.65 °F)	0.47 °C (0.85 °F)	0.51 °C (0.92 °F)
Type N (37)		0.25 °C (0.45 °F)	0.44 °C (0.79 °F)	0.52 °C (0.94 °F)	0.69 °C (1.24 °F)	0.75 °C (1.35 °F)
Type R (38)		0.62 °C (1.12 °F)	1.08 °C (1.94 °F)	1.28 °C (2.30 °F)	1.69 °C (3.04 °F)	1.85 °C (3.33 °F)
Type S (39)				1.29 °C (2.32 °F)	1.70 °C (3.06 °F)	
Type T (40)		0.18 °C (0.32 °F)	0.32 °C (0.58 °F)	0.38 °C (0.68 °F)	0.50 °C (0.90 °F)	0.54 °C (0.97 °F)
Type L (41)	DIN 43710	0.12 °C (0.22 °F)	0.21 °C (0.38 °F)	0.25 °C (0.45 °F)	0.33 °C (0.59 °F)	0.36 °C (0.65 °F)
Type U (42)		0.18 °C (0.32 °F)	0.31 °C (0.56 °F)	0.37 °C (0.67 °F)	0.49 °C (0.88 °F)	0.53 °C (0.95 °F)
Type L (43)	GOST R8.585-2001	0.15 °C (0.27 °F)	0.26 °C (0.47 °F)	0.31 °C (0.56 °F)	0.41 °C (0.74 °F)	0.44 °C (0.79 °F)
Voltage transmitter (mV)						
−20 to 100 mV		≤ 0.012% * MV or 4 µV	≤ 0.021% * MV or 7 µV	≤ 0.025% * MV or 8 µV	≤ 0.033% * MV or 11 µV	≤ 0.036% * MV or 12 µV

1) The larger value is valid

Analog output long-term drift

D/A long-term drift [1] (±)				
after 1 month	after 6 months	after 1 year	after 3 years	after 5 years
0.018%	0.026%	0.030%	0.036%	0.038%

1) Percentages based on the configured span of the analog output signal.

Influence of the reference junction

Pt100 DIN IEC 60751 Cl. B (internal reference junction with thermocouples TC)

If an external RTD Pt100 2-wire sensor is used for the reference junction measurement, the measured error caused by the transmitter is < 0.5 °C (0.9 °F). The measured error of the sensor element also needs to be added.

13.5 Environment

Ambient temperature

- −40 to +85 °C (−40 to +185 °F), for hazardous areas see Ex documentation → 60
- Without display: −40 to +85 °C (−40 to +185 °F)
- With display: −40 to +80 °C (−40 to +176 °F)
- With overvoltage protection module: −40 to +85 °C (−40 to +185 °F)

The display may react slowly at temperatures < −20 °C (−4 °F). The readability of the display cannot be guaranteed at temperatures < −30 °C (−22 °F).

Storage temperature

- Without display: −50 to +100 °C (−58 to +212 °F)
- With display: −40 to +80 °C (−40 to +176 °F)
- With overvoltage protection module: −50 to +100 °C (−58 to +212 °F)

Relative humidity

Permitted: 0 to 95 %

Operating altitude

Up to 4 000 m (13 123 ft) above sea level

Climate class

As per IEC 60654-1, Class Dx

Degree of protection

Die-cast aluminum or stainless steel housing: IP66/67, Type 4X

Shock and vibration resistance

Shock resistance according to DIN EN 60068-2-27 and KTA 3505 (Section 5.8.4 shock test): 30g / 18 ms

Vibration resistance according to DIN EN 60068-2-6:
- 2 to 8.6 Hz / 10 mm
- 8.6 to 150 Hz / 3g

The use of L-shaped mounting brackets can cause resonance (see pipe 2" mounting bracket in the 'Accessories' section). Caution: vibrations at the transmitter may not exceed specifications.

Electromagnetic compatibility (EMC)

CE compliance

Electromagnetic compatibility in accordance with all the relevant requirements of the IEC/EN 61326 series and NAMUR Recommendation EMC (NE21). For details, refer to the Declaration of Conformity.

Maximum measured error <1% of measuring range.

Interference immunity as per IEC/EN 61326 series, industrial requirements

Interference emission as per IEC/EN 61326 series, Class B equipment

A shielded cable that is grounded on both sides must be used for sensor cable lengths of 30 m (98.4 ft) and more. The use of shielded sensor cables is generally recommended.

Connection of the functional grounding may be needed for functional purposes. Compliance with the electrical codes of individual countries is mandatory.

Overvoltage category: II

Pollution degree: 2

13.6 Mechanical construction

Design, dimensions: Dimensions in mm (in)

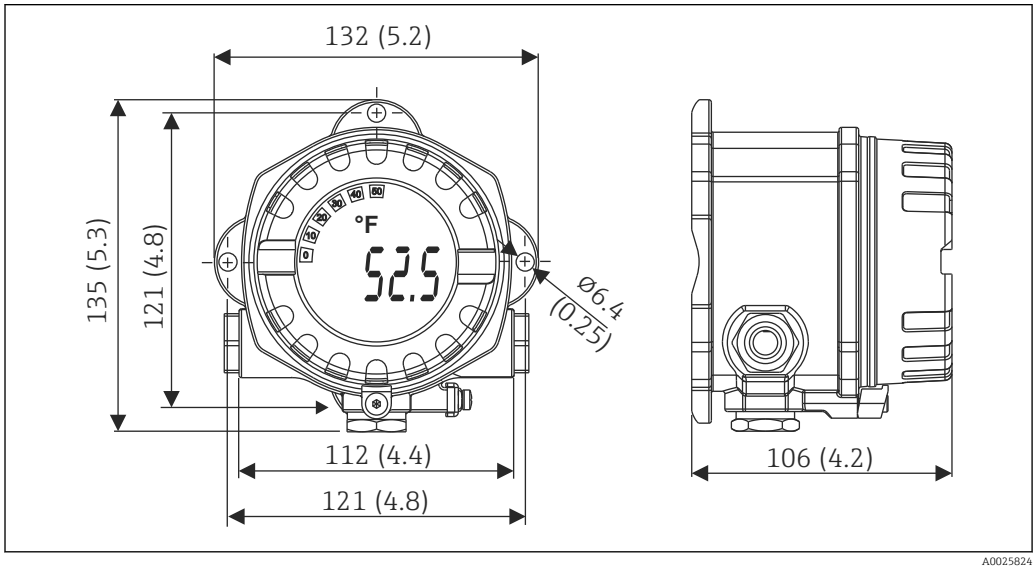

17 *Die-cast aluminum housing for general applications, or optional stainless steel housing (316L)*

- Electronics module and connection compartment
- Display attachable in 90° stages

Weight
- Aluminum housing approx. 1.4 kg (3 lb), with display
- Stainless steel housing approx. 4.2 kg (9.3 lb), with display

Materials

Housing	Sensor terminals	Nameplate
Die-cast aluminum housing AlSi10Mg/ AlSi12 with powder coating on polyester base	Nickel-plated brass0.3 µm gold flashed / cpl., corrosion-free	Aluminum AlMgI, anodized in black
316L		1.4404 (AISI 316L)
O-ring 88x3 HNBR 70° Shore PTFE coating	-	-

Cable entries

Version	Type
Thread	3x thread ½" NPT
	3x thread M20
	3x thread G½"

Connecting cable

Cable specification
- A normal device cable suffices if only the analog signal is used.
- A shielded cable is recommended for HART® communication. Observe grounding concept of the plant.
- The terminals for the fieldbus connection have integrated polarity protection.
- Cable cross-section: max. 2.5 mm²

13.7 Certificates and approvals

CE mark

The product meets the requirements of the harmonized European standards. As such, it complies with the legal specifications of the EC directives. The manufacturer confirms successful testing of the product by affixing to it the CE-mark.

EAC mark

The product meets the legal requirements of the EEU guidelines. The manufacturer confirms the successful testing of the product by affixing the EAC mark.

Ex approvals

More information on the hazardous area versions currently available (ATEX, CSA, etc.) is available from your supplier. Separate Ex documentation contain all the data relevant for explosion protection.

CSA C/US

The product complies with the requirements of "CLASS 2252 06 - Process Control Equipment" and "CLASS 2252 86 - Process Control Equipment - Certified to US Standards".

HART® certification

The temperature transmitter is registered by the FieldComm Group. The device meets the requirements of the HART® Communication Protocol Specifications, Revision 7.

Radio approval

The device has Bluetooth® radio approval in accordance with the Radio Equipment Directive (RED) for Europe and the Federal Communications Commission (FCC) 15.247 for North America.

Europe	
This device meets the requirements of the Telecommunications Directive RED 2014/53/EU:	▪ EN 300 328 ▪ EN 301 489-1 ▪ EN 301 489-17

Canada and United States	
English: This device complies with Part 15 of the FCC Rules and with Industry Canada licenceexempt RSS standard(s). Operation is subject to the following two conditions: ▪ This device may not cause harmful interference, and ▪ This device must accept any interference received, including interference that may cause undesired operation. Changes or modifications made to this equipment not expressly approved by Endress+Hauser may void the user's authorization to operate this equipment. This equipment has been tested and found to comply with the limits for a Class B digital device, pursuant to part 15 of the FCC Rules. These limits are designed to provide reasonable protection against harmful interference in a residential installation. This equipment generates, uses and can radiate radio frequency energy and, if not installed and used in accordance with the instructions, may cause harmful interference to radio communications. However, there is no guarantee that interference will not occur in a particular installation. If this equipment does cause harmful interference to radio or television reception, which can be determined by turning the equipment off and on, the user is encouraged to try to correct the interference by one or more of the following measures: ▪ Reorient or relocate the receiving antenna. ▪ Increase the separation between the equipment and receiver. ▪ Connect the equipment into an outlet on a circuit different from that to which the receiver is connected. ▪ Consult the dealer or an experienced radio/TV technician for help. This equipment complies with FCC and IC radiation exposure limits set forth for an uncontrolled environment. This equipment should be installed and operated with minimum distance 20cm between the radiator and your body.	Français: Le présent appareil est conforme aux CNR d'industrie Canada applicables aux appareils radio exempts de licence. L'exploitation est autorisée aux deux conditions suivantes : ▪ L'appareil ne doit pas produire de brouillage, et ▪ L'utilisateur de l'appareil doit accepter tout brouillage radioélectrique subi, même si le brouillage est susceptible d'en compromettre le fonctionnement. Les changements ou modifications apportées à cet appareil non expressément approuvée par Endress +Hauser peut annuler l'autorisation de l'utilisateur d'opérer cet appareil. Déclaration d'exposition aux radiations: Cet équipement est conforme aux limites d'exposition aux rayonnements IC établies pour un environnement non contrôlé. Cet équipement doit être installé et utilisé avec un minimum de 20 cm de distance entre la source de rayonnement et votre corps.

MTTF

- Without Bluetooth® wireless technology: 152 years
- With Bluetooth® wireless technology: 114 years

According to Siemens SN-29500 at 40 °C (104 °F)

The mean time to failure (MTTF) denotes the theoretically expected time until the device fails during normal operation. The term MTTF is used for non-repairable systems such as temperature transmitters.

13.8 Supplementary documentation

- Supplementary ATEX documentation:
  - ATEX/IECEx: II1G Ex ia IIC T6...T4 Ga: XA01957T
  - II1G Ex ia IIC; II2D Ex ia IIIC: XA01958T
  - ATEX: II3G Ex ic IIC T6 Gc, II3G Ex nA IIC T6 Gc, II3D Ex tc IIIC Dc: XA02090T
- Supplementary documentation CSA:
  XP, DIP, NI: XA01977T/09
  Intrinsic safety: XA01979T/09

14 Operating menu and parameter description

The following tables list all the parameters in the "Guidance, Diagnostics, Application and System" operating menus. The page number refers to where a description of the parameter can be found.

Depending on the parameter configuration, not all submenus and parameters are available in every device. Information on this can be found in the parameter description under "Prerequisite".

This symbol indicates how to navigate to the parameter using operating tools (e.g. FieldCare).

Guidance →	**Commissioning →**	Commissioning wizard Start	→ 35

Guidance →	Create documentation [1]
	Save / restore [1]
	Compare datasets [1]
	Operating time temperature ranges [2] Report creation in event of: Backup & reset, Reset, Parameter report

1) These parameters only appear in FDT/DTM-based operating tools, such as Endress+Hauser's FieldCare and DeviceCare
2) This parameter does not appear in the handheld devices

The information from the menu **Diagnostics → Operating time temperature ranges → Sensor** can be processed with the functions under **Guidance → Operating time temperature ranges**. With the "Backup & reset" option, the parameters are saved in a separate memory with the actual length of time the sensor was operated in the specific temperature range, and the current values in the menu **Diagnostics → Operating time temperature ranges → Sensor** are reset. This function can be used following a sensor replacement, for example. The separate memory always only contains the last saved data record. The "Reset" option irrevocably resets the current values in the menu **Diagnostics → Operating time temperature ranges → Sensor**. If the "Create protocol" option is selected, a report is created with the data records for the current lengths of time and the saved data record. This report is saved in PDF format.

Diagnostics →	**Actual diagnostics →**	Actual diagnostics 1	→ 65
		Last rectified diagnostic	→ 65
		Time stamp	→ 65
		Operating time	→ 65

Diagnostics →	**Diagnostic list →**	Actual diagnostics 1, 2, 3	→ 65
		Actual diag channel 1, 2, 3	→ 66
		Time stamp 1, 2, 3	→ 65

Diagnostics →	**Event logbook →**	Previous diagnostics n	→ 66
		Previous diag n channel	→ 67
		Time stamp n	→ 66

Diagnostics →	**Simulation →**	Diagnostic event simulation	→ 67
		Current output simulation	→ 68
		Value current output	→ 68

		Sensor simulation		→ 68
		Sensor simulation value		→ 68

Diagnostics →	**Diagnostic settings →**	**Properties →**	Alarm delay	→ 69
			Limit corrosion detection	→ 69
			Sensor line resistance	→ 69
			Thermocouple diagnostic	→ 70
		Sensor → **Electronics →** **Process →** **Configuration →**	Diagnostic behavior	→ 70
		Sensor → **Electronics →** **Process →** **Configuration →**	Status signal	→ 70

Diagnostics →	**Min/max values →**	Sensor min value	→ 71
		Sensor max value	→ 71
		Reset sensor min/max values	→ 71
		Device temperature min value	→ 71
		Device temperature max value	→ 72
		Reset device temp. min/max values	→ 72

Diagnostics →	**Operating time temperature ranges →**	**Sensor →**	Range Sensor technology	→ 72
		Electronics →	Range	→ 73

Application →	**Measured values →**	Sensor value	→ 73
		Sensor raw value	→ 73
		Output current	→ 73
		Percent of range	→ 73
		Device temperature	→ 73
		PV	→ 74
		SV	→ 74
		TV	→ 74
		QV	→ 75

Application →	**Sensor →**	Unit	→ 75
		Sensor type	→ 75
		Connection type	→ 75
		2-wire compensation	→ 76
		Reference junction	→ 76
		RJ preset value	→ 76
		Sensor offset	→ 77

Application →	**Sensor →**	**Linearization →**	Call./v. Dusen coeff. R0, A, B, C	→ 77
			Polynomial coeff. R0, A, B	→ 78
			Sensor lower limit	→ 78
			Sensor upper limit	→ 79

Application →	**Current output →**	4mA value	→ 79
		20mA value	→ 79
		Failure mode	→ 79
		Failure current	→ 80
		Current trimming 4 mA	→ 80
		Current trimming 20 mA	→ 81
		Damping	→ 81

Application →	**HART configuration →**	Assign current output (PV)	→ 81
		Assign SV	→ 82
		Assign TV	→ 82
		Assign QV	→ 82
		HART address	→ 82
		No. of preambles	→ 83

System→	**Device management→**	HART short tag	→ 83
		Device tag	→ 83
		Locking status	→ 84
		Device reset	→ 84
		Configuration counter	→ 84
		Configuration changed	→ 85
		Reset configuration changed flag	→ 85

System→	**User management →**	**Define password →**	New password	→ 86
			Confirm new password	→ 86
			Status password entry	→ 86
		Change user role →	Password [1)]	→ 85
			Status password entry	→ 85
		Reset password →	Reset password	→ 87
			Status password entry	→ 86
		Change password →	Old password	→ 85
			New password	→ 86
			Confirm new password	→ 86
			Status password entry	→ 88
		Delete password →	Delete password	→ 88

1) The required user role must first be selected here when operating the device via the SmartBlue App.

System→	**Bluetooth configuration →**	Bluetooth	→ 89
		Bluetooth status	→ 89
		Change Bluetooth password [1)]	→ 89

1) Function is only visible in the SmartBlue App

System →	**Information →**	**Device →**	Squawk	→ 90
			Serial number	→ 90
			Order code	→ 90
			Firmware version	→ 91
			Hardware version	→ 91
			Extended order code (n)	→ 91
			Device name	→ 91
			Manufacturer	→ 92

System →	**Information →**	**HART info →**	Device type	→ 92
			Device revision	→ 92
			HART revision	→ 92
			HART descriptor	→ 93
			HART message	→ 93
			Hardware revision	→ 91
			Software revision	→ 93
			HART date code	→ 93
			Manufacturer ID	→ 94
			Device ID	→ 94

System →	**Information →**	**Device location →**	Latitude	→ 94
			Longitude	→ 95
			Altitude	→ 95
			Location method	→ 95
			Location description	→ 95
			Process unit tag	→ 96

System →	**Display →**	Display interval	→ 96
		Value 1 display	→ 96
		Decimal places 1	→ 97
		Display text 1	→ 97
		Value 2 display	→ 96
		Decimal places 2	→ 97
		Display text 2	→ 97
		Value 3 display	→ 96
		Decimal places 3	→ 97
		Display text 3	→ 97

14.1 Menu: Diagnostics

14.1.1 Submenu: Actual diagnostics

Actual diagnostics 1

Navigation Diagnostics → Actual diagnostics → Actual diagnostics 1

Description Displays the current diagnostic message. If two or more messages occur simultaneously, the messages are shown in order of priority.

Additional information Example for display format:
F041-Sensor interrupted

Last rectified diagnostic

Navigation Diagnostic → Actual diagnostics → Last rectified diagnostic

Description Displays the last rectified diagnostic message

Additional information Example for display format:
F041-Sensor interrupted

Timestamp

Navigation Diagnostics → Actual diagnostics → Time stamp

Description Displays the time stamp of the last rectified diagnostic message in relation to the operating time.

User interface Hours (h)

Operating time

Navigation Diagnostics → Actual diagnostics → Operating time

Description Displays the length of time the device has been in operation.

User interface Hours (h)

14.1.2 Submenu: Diagnostic list

n = Number of diagnostic messages (n = 1 to 3)

Actual diagnostics n

Navigation Diagnostics → Actual diagnostics → Actual diagnostics n

Description Displays the current diagnostic message. If two or more messages occur simultaneously, the messages are sorted by order of priority.

Additional information Example for display format:
F041-Sensor interrupted

Actual diag channel n

Navigation Diagnostics → Actual diagnostics → Actual diag channel n

Description Displays the function module to which the diagnostic message refers.

User interface
- Device
- Sensor
- Device temperature
- Current output
- Sensor RJ

Time stamp n

Navigation Diagnostics → Actual diagnostics → Time stamp n

Description Displays the time stamp of the current diagnostic message in relation to the operating time.

User interface Hours (h)

14.1.3 Submenu: Event logbook

n = Number of diagnostic messages (n = 1 to 10). The last 10 messages are listed in chronological order.

Previous diagnostics n

Navigation Diagnostics → Event logbook → Previous diagnostics n

Description Displays the diagnostic messages that occurred in the past. The last 10 messages are listed in chronological order.

User interface Symbol for event behavior and diagnostic event.

Additional information Example for display format:
F201-Electronics faulty

Previous diag n channel

Navigation Diagnostics → Event logbook → Previous diag n channel

Description Displays the function module to which the diagnostic message refers.

User interface
- Device
- Sensor
- Device temperature
- Current output
- Sensor RJ

Time stamp n

Navigation Diagnostics → Event logbook → Time stamp n

Description Displays the time stamp of the current diagnostic message in relation to the operating time.

User interface Hours (h)

14.1.4 Submenu: Simulation

Diagnostic event simulation

Navigation Diagnostics → Simulation → Diagnostic event simulation

Description Switches diagnostic simulation on and off. The status signal indicates a category "C" diagnostic message ("function check") while the simulation is running.

Options Enter one of the diagnostic events using the dropdown menu → 40. The assigned status signals and diagnostic behaviors are used in the simulation mode. Select 'Off' to quit the simulation.
Example: x043 Short circuit

Factory setting Off

Current output simulation

Navigation Diagnostics → Simulation → Current output simulation

Description Use this function to switch simulation of the current output on and off. The status signal indicates a category "C" diagnostic message ("function check") while the simulation is running.

Options
- Off
- On

Factory setting Off

Value current output

Navigation Diagnostics → Simulation → Value current output

Description Use this function to set a current value for the simulation. In this way, users can verify the correct adjustment of the current output and the correct function of downstream switching units.

User entry 3.58 to 23 mA

Factory setting 3.58 mA

Sensor simulation

Navigation Diagnostics → Simulation → Sensor simulation

Description Use this function to enable the simulation of the process variable. The simulation value of the process variable is defined in the **Sensor simulation value** parameter. The status signal indicates a category "C" diagnostic message ("function check") while the simulation is running.

Options
- Off
- On

Factory setting Off

Sensor simulation value

Navigation Diagnostics → Simulation → Sensor simulation value

Description Use this function to enter a simulation value for the process variable. Subsequent measured value processing and the signal output use this simulation value. In this way, users can verify whether the measuring device has been configured correctly.

User entry $-1.0 \cdot 10^{20}$ to $+1.0 \cdot 10^{20}$ °C

Factory setting 0.00 °C

14.1.5 Submenu: Diagnostic settings

Submenu: Properties

Alarm delay

Navigation Diagnostics → Diagnostic settings → Properties → Alarm delay

Description Use this function to set the delay time during which a diagnostics signal is suppressed before it is output.

User entry 0 to 5 s

Factory setting 2 s

Limit corrosion detection

Navigation Diagnostics → Diagnostic settings → Properties → Limit corrosion detection

Prerequisite A 4-wire RTD or TC must be selected as the sensor type or connection type. → 75

Description Use this function to enter the limit value for corrosion detection. If this value is exceeded, the device behaves as defined in the diagnostic settings.

User entry
- 5 to 250 Ω for 4-wire RTD
- 5 to 10 000 Ω for TC

Factory setting
- 50.0 Ω for 4-wire RTD connection type
- 5 000 Ω for TC sensor type

Sensor line resistance

Navigation Diagnostics → Diagnostic settings → Properties → Sensor line resistance

Prerequisite A 4-wire RTD or TC must be selected as the sensor type or connection type. → 75

Description Displays the highest measured resistance value of the sensor lines.

User interface $-1.0 \cdot 10^{20}$ to $+1.0 \cdot 10^{20}$ Ω

Thermocouple diagnostic

Navigation Diagnostics → Diagnostic settings → Properties → Thermocouple diagnostic

Description Use this function to switch off the "Sensor corrosion" and "Sensor break" diagnostic functions during thermocouple measurement.

This may be necessary in order to connect electronic simulators (e.g. calibrators) during a thermocouple measurement. The accuracy of the transmitter is not influenced by either the activation or deactivation of the thermocouple diagnostics function.

Options
- On
- Off

Factory setting On

Diagnostic behavior

Navigation Diagnostics → Diagnostic settings → Sensor → / Electronics → / Process → / Configuration → Diagnostic behavior

Description Each diagnostic event is assigned a certain diagnostic behavior. The user can change this assignment for certain diagnostic events. → 40

Options
- Alarm
- Warning
- Disabled

Factory setting See the list of diagnostic events → 40

Status signal

Navigation Diagnostics → Diagnostic settings → Sensor → / Electronics → / Process → / Configuration → Status signal

Description Each diagnostic event is assigned a certain status signal at the factory [1]. The user can change this assignment for certain diagnostic events. → 40

1) Digital information available via HART® communication and for the visualization of the diagnostic events on the display

Options
- Failure (F)
- Function check (C)
- Out of specification (S)
- Maintenance required (M)
- No effect (N)

Factory setting See the list of diagnostic events → 40

14.1.6 Submenu: Min/max values

Sensor min value

Navigation Diagnostics → Min/max values → Sensor min value

Description Displays the minimum temperature measured in the past at the sensor input (minimum indicator).

Sensor max value

Navigation Diagnostics → Min/max values → Sensor max value

Description Displays the maximum temperature measured in the past at the sensor input (maximum indicator).

Reset sensor min/max values

Navigation Diagnostics → Min/max values → Reset sensor min/max values

Description Resets the min/max values of the sensor to their default values.

User entry Clicking the **Reset sensor min/max values** button activates the reset function. As a result of this action, the min/max values of the sensor only display the reset, temporary values.

Device temperature min value

Navigation Diagnostics → Min/max values → Device temperature min value

Description Displays the minimum electronics temperature measured in the past (minimum indicator).

Device temperature max value

Navigation Diagnostics → Min/max values → Device temperature max value

Description Displays the maximum electronics temperature measured in the past (maximum indicator).

Reset device temp. min/max values

Navigation Diagnostics → Min/max values → Reset device temp. min/max values

Description Resets the peakhold indicators for the minimum and maximum electronic temperatures measured.

User entry Clicking the **Reset device temperature min/max values** button activates the reset function. As a result of this action, the min/max values for the device temperature only display the reset, temporary values.

14.1.7 Submenu: Operating time temperature ranges

The overview of the times indicates how long the connected sensor has been in operation in the particular temperature range. This can be particularly useful when operating sensors at range limits both with regard to the temperatures and the mechanical load. These values visualize the load on the sensor and can be used to draw long-term conclusions regarding the deterioration/aging or operating life of the sensor.

Sensor

Navigation Diagnostics → Operating time temperature ranges → Sensor

Description

- Displays the current length of time in hours (h) that the sensor has been operated in the pre-defined temperature range.
- Sensor technology
  Use this function to select the sensor technology of the connected sensor:
  - None
  - RTD wire wound
  - RTD thinfilm basic
  - RTD thinfilm standard
  - RTD thinfilm QuickSens
  - RTD thinfilm StrongSens
  - Thermocouple

Additional information

Temperature ranges:
- < −100 °C (−148 °F)
- −100 to −51 °C (−148 to −59 °F)
- −50 to −1 °C (−58 to +31 °F)
- 0 to +49 °C (+32 to +121 °F)
- +50 to +99 °C (+122 to +211 °F)
- +100 to +149 °C (+212 to +301 °F)
- +150 to +199 °C (+302 to +391 °F)
- +200 to +299 °C (+392 to +571 °F)
- +300 to +399 °C (+572 to +751 °F)
- +400 to +499 °C (+752 to +931 °F)
- +500 to +599 °C (+932 to +1 111 °F)
- +600 to +799 °C (+1 112 to +1 471 °F)
- +800 to +999 °C (+1 472 to +1 831 °F)
- +1 000 to +1 249 °C (+1 832 to +2 281 °F)
- +1 250 to +1 499 °C (+2 282 to +2 731 °F)
- +1 500 to +1 749 °C (+2 732 to +3 181 °F)
- +1 750 to +1 999 °C (+3 182 to +3 631 °F)
- ≥+2 000 °C (+3 632 °F)

Electronics

Navigation Diagnostics → Operating time temperature ranges → Electronics

Description

Displays the current length of time in hours (h) that the device has been operated in the pre-defined temperature range:
- < −25 °C (−13 °F)
- −25 to −1 °C (−13 to 31 °F)
- 0 to 39 °C (32 to 103 °F)
- 40 to 64 °C (104 to 148 °F)
- ≥65 °C (149 °F)

14.2 Menu: Application

14.2.1 Submenu: Measured values

Sensor value

Navigation Application → Measured values → Sensor value

Description

Displays the current measured value at the sensor input.

Sensor raw value

Navigation Application → Measured values → Sensor raw value

Description Displays the non-linearized mV/Ohm value at the specific sensor input.

Output current

Navigation Application → Measured values → Output current

Description Displays the calculated output current in mA.

Percent of range

Navigation Application → Measured values → Percent of range

Description Displays the measured value in percentage of the span

Device temperature

Navigation Application → Measured values → Device temperature

Description Displays the current electronics temperature.

PV

Navigation Application → Measured values → PV

Description Displays the primary device variable.

SV

Navigation Application → Measured values → SV

Description Displays the secondary device variable.

TV

Navigation Application → Measured values → TV

Description Displays the tertiary device variable.

QV

Navigation Application → Measured values → QV

Description Displays the quaternary (fourth) device variable.

14.2.2 Submenu: Sensor

Unit

Navigation Application → Sensor → Unit

Description Use this function to select the engineering unit for all the measured values.

Selection
- °C
- °F
- K
- Ω
- mV

Factory setting °C

Additional information Please note: If another unit has been selected instead of the factory setting (°C), all the set temperature values are converted to correspond to the configured temperature unit.
Example: 150 °C is set as the upper range value. Following the selection of °F as the engineering unit, the new (converted) upper range value = 302 °F.

Sensor type

Navigation Application → Sensor → Sensor type

Description Use this function to select the sensor type for the sensor input.

Please observe the terminal assignment when connecting the sensors.

Selection A list of all the possible sensor types is provided in the 'Technical data' section. → 47

Factory setting Pt100 IEC751

Connection type

Navigation Application → Sensor → Connection type

Prerequisite An RTD sensor or a resistance transmitter must be specified as the sensor type.

Description Use this function to select the connection type for the sensor.

Selection 2-wire, 3-wire, 4-wire

Factory setting 4-wire

2-wire compensation

Navigation Application → Sensor → 2-wire compensation

Prerequisite An RTD sensor or a resistance transmitter with a **2-wire** connection type must be specified as the sensor type.

Description Use this function to specify the resistance value for two-wire compensation in RTDs.

User entry 0 to 30 Ω

Factory setting 0 Ω

Reference junction

Navigation Application → Sensor → Reference junction

Prerequisite A thermocouple (TC) sensor must be selected as the sensor type.

Description Use this function to select reference junction measurement for temperature compensation of thermocouples (TC).

If **Preset value** is selected, the compensation value is specified via the **RJ preset value** parameter.

Selection
- Internal measurement: the internal reference junction temperature is used.
- Fixed value: a fixed value is used.
- Measured value of external sensor: The measured value of an RTD Pt100 2-wire sensor which is connected to terminals 1 and 3 is used.

Factory setting Internal measurement

RJ preset value

Navigation Application → Sensor → RJ preset value

Prerequisite The **Preset value** parameter must be set if the **Reference junction** option is selected.

Description Use this function to define the fixed preset value for temperature compensation.

User entry −58 to +360

Factory setting 0,00

Sensor offset

Navigation Application → Sensor → Sensor offset

Description Use this function to set the zero point correction (offset) of the sensor measured value. The value indicated is added to the measured value.

User entry −18.0 to +18.0

Factory setting 0,0

14.2.3 Submenu: Linearization

Call./v. Dusen coeff. R0

Navigation Application → Sensor → Linearization → Call./v. Dusen coeff. R0

Prerequisite The RTD platinum (Callendar/Van Dusen) option is enabled in the **Sensor type** parameter.

Description Use this function to set the R0 Value only for linearization with the Callendar/Van Dusen polynomial.

User entry 10 to 2 000 Ω

Factory setting 100.000 Ω

Call./v. Dusen coeff. A, B and C

Navigation Application → Sensor → Linearization → Call./v. Dusen coeff. A, B and C

Prerequisite The RTD platinum (Callendar/Van Dusen) option is enabled in the **Sensor type** parameter.

Description Use this function to set the coefficients for sensor linearization based on the Callendar/Van Dusen method.

User entry
- A: 3.0e-003 to 4.0e-003
- B: -2.0e-006 to 2.0e-006
- C: -1.0e-009 to 1.0e-009

Factory setting
- A: 3.90830e-003
- B: -5.77500e-007
- C: -4.18300e-012

Polynomial coeff. R0

Navigation Application → Sensor → Linearization → Polynomial coeff. R0

Prerequisite The RTD poly nickel or RTD copper polynomial option is enabled in the **Sensor type** parameter.

Description Use this function to set the R0 Value only for linearization of nickel/copper sensors.

User entry 10 to 2 000 Ω

Factory setting 100.00 Ω

Polynomial coeff. A, B

Navigation Application → Sensor → Linearization → Polynomial coeff. Polynomial coeff. A, B

Prerequisite The RTD poly nickel or RTD copper polynomial option is enabled in the **Sensor type** parameter.

Description Use this function to set the coefficients for sensor linearization of copper/nickel resistance thermometers.

User entry
- Polynomial coeff. A: 4.0e-003 to 6.0e-003
- Polynomial coeff. B: -2.0e-005 to 2.0e-005

Factory setting Polynomial coeff. A = 5.49630e-003

Polynomial coeff. B = 6.75560e-006

Sensor lower limit

Navigation Application → Sensor → Linearization → Sensor lower limit

Prerequisite The RTD platinum, RTD poly nickel or RTD copper polynomial option is enabled in the **Sensor type** parameter.

Description Use this function to set the lower calculation limit for special sensor linearization.

User entry Depends on the **sensor type** selected.

Factory setting Depends on the **sensor type** selected.

Sensor upper limit

Navigation Application → Sensor → Linearization → Sensor upper limit

Prerequisite The RTD platinum, RTD poly nickel or RTD copper polynomial option is enabled in the **Sensor type** parameter.

Description Use this function to set the upper calculation limit for special sensor linearization.

User entry Depends on the **sensor type** selected.

Factory setting Depends on the **sensor type** selected.

14.2.4 Submenu: Current output

4mA value

Navigation Application → Current output → 4mA value

Description Use this function to assign a measured value to the current value 4 mA.

Factory setting 0 °C

20mA value

Navigation Application → Current output → 20mA value

Description Use this function to assign a measured value to the current value 20 mA.

Factory setting 100 °C

Failure mode

Navigation Application → Current output → Failure mode

Description Use this function to select the signal on alarm level of the current output in the event of an error.

Selection
- High alarm
- Low alarm

Factory setting Low alarm

Failure current

Navigation Application → Current output → Failure current

Prerequisite The **High alarm** option is enabled in the "Failure mode" parameter.

Description Use this function to set the value the current output adopts in an alarm condition.

User entry 21.5 to 23 mA

Factory setting 22.5 mA

Adjustment of the analog output (4 and 20 mA current trimming)

Current trimming is used to compensate the analog output (D/A conversion). Here, the output current of the transmitter can be adapted so that it suits the value expected at the higher-level system.

Current trimming does not affect the digital HART® value. This can cause the measured value shown on the locally installed display to differ marginally from the value displayed in the higher-level system.

Procedure

1. Start
↓
2. Install an accurate ammeter (more accurate than the transmitter) in the current loop.
↓
3. Switch on current output simulation and set the simulation value to 4 mA.
↓
4. Measure the loop current with the ammeter and make a note of the value.
↓
5. Set the simulation value to 20 mA.
↓
6. Measure the loop current with the ammeter and make a note of the value.
↓
7. Enter the current values determined as adjustment values in the **Current trimming 4 mA / 20 mA** parameters
↓
8. Deactivate simulation
↓
9. End

Current trimming 4 mA

Navigation Application → Current output → Current trimming 4 mA

Description Use this function to set the correction value for the current output at the start of the measuring range at 4 mA.

User entry 3.85 to 4.15 mA

Factory setting 4 mA

Additional information The trimming only affects the current loop values from 3.8 to 20.5 mA. The failure mode with **Low Alarm** and **High Alarm** current values is not subject to trimming.

Current trimming 20 mA

Navigation Application → Current output → Current trimming 20 mA

Description Use this function to set the correction value for the current output at the end of the measuring range at 20 mA.

User entry 19.85 to 20.15 mA

Factory setting 20.000 mA

Additional information The trimming only affects the current loop values from 3.8 to 20.5 mA. The failure mode with **Low Alarm** and **High Alarm** current values is not subject to trimming.

Damping

Navigation Application → Current output → Damping

Description Use this function to set the time constant for current output damping.

User entry 0 to 120 s

Factory setting 0 s

Additional information The current output responds to fluctuations in the measured value with an exponential delay. The time constant of this delay is defined by this parameter. If a low time constant is entered, the current output responds quickly to the measured value. On the other hand, the response of the current output is delayed significantly if a high time constant is entered.

14.2.5 Submenu: HART configuration

Assign current output (PV)

Navigation Application → HART configuration → Assign current output (PV)

Description Use this function to assign the measured variables to the primary HART® value (PV).

User interface Sensor

Factory setting Sensor (fixed assignment)

Assign SV

Navigation Application → HART configuration → Assign SV

Description Use this function to assign the measured variable to the secondary HART value (SV).

User interface Device temperature (fixed assignment)

Factory setting Device temperature (fixed assignment)

Assign TV

Navigation Application → HART configuration → Assign TV

Description Use this function to assign the measured variable to the tertiary HART value (TV).

User interface Sensor (fixed assignment)

Factory setting Sensor (fixed assignment)

Assign QV

Navigation Application → HART configuration → Assign QV

Description Use this function to assign the measured variable to the quaternary (fourth) HART value (QV).

User interface Sensor (fixed assignment)

Factory setting Sensor (fixed assignment)

HART address

Navigation Application → HART configuration → HART address

Description Use this function to define the HART address of the device.

It is not possible to write to the parameter. The HART address can be set in FDT/DTM-based operating tools, via the CommDTM. [1)]

1) It cannot be set via the Configuration app, however.

Factory setting 0

Additional information The measured value can only be transmitted via the current value if the address is set to "0". The current is fixed at 4.0 mA for all other addresses (Multidrop mode).

No. of preambles

Navigation Application → HART configuration → No. of preambles

Description Use this function to define the number of preambles in the HART telegram.

User entry 5 to 20

Factory setting 5

14.3 Menu: System

14.3.1 Submenu: Device management

HART short tag

Navigation System → Device management → HART short tag

Description Use this function to define a short tag for the measuring point.

User entry Up to 8 alphanumeric characters (letters, numbers and certain special characters).

Factory setting TMT142B

Device tag

Navigation System → Device management → Device tag

Description Use this function to enter a unique name for the measuring point so it can be identified quickly within the plant.

User entry Up to 32 alphanumeric characters (letters, numbers and certain special characters).

Factory setting EH_TMT142B_serial number

Locking status

Navigation System → Device management → Locking status

Description Displays the device locking status. When write protection is activated, write access to the parameters is disabled.

User interface Enabled or disabled check box: **Locked by hardware**

Device reset

Navigation System → Device management → Device reset

Description Use this function to reset the device configuration - either entirely or in part - to a defined state.

Options

- **Not active**
  No action is executed and the user exits the parameter.
- **To factory defaults**
  All the parameters are reset to the factory setting.
- **To delivery settings**
  All parameters are reset to the order configuration. The order configuration can differ from the factory setting if customer-specific parameter values were defined when the device was ordered.
- **Restart device**
  The device is restarted but the device configuration remains unchanged.

Factory setting Not active

Configuration counter

Navigation System → Device management → Configuration counter

Description Displays the counter reading for changes to device parameters.

Static parameters, whose values change during optimization or configuration, cause this parameter to increment by 1. This supports parameter version management. If several parameters change, e.g. as a result of loading parameters from FieldCare etc. to the device, the counter can show a higher value. The counter cannot be reset and is also not reset to the default value when the device is reset. If the counter value exceeds 65535, it starts again at 1.

Configuration changed

Navigation System → Device management → Configuration changed

Description Displays whether the configuration of the device has been changed by a master (primary or secondary).

Reset configuration changed flag

Navigation System → Device management → Reset configuration changed flag

Description The **Configuration changed** information is reset by a master (primary or secondary).

14.3.2 Submenu: User management

Define password → Maintenance	New password
	Confirm new password
	Status password entry
Change user role → Operator	Password [1]
	Status password entry
Reset password → Operator	Reset password
	Status password entry
Change password → Maintenance	Old password
	New password
	Confirm new password
	Status password entry
Delete password → Maintenance	Old password Delete password

1) The required user role must first be selected here when operating the device via the SmartBlue app.

Navigation in the submenu is supported by the following operating elements:
- **Back**
  Return to the previous page
- **Cancel**
  If Cancel is selected, the status before the submenu was started is restored

Define password

Navigation System → User management → Define password

Description Use this function to start password definition

User entry Activate the button

New password

Navigation System → User management → Define password → New password

Description Use this function to enter a password for the **Maintenance** user role to gain access to the relevant functions.

Additional information If the factory setting is not changed, the device is set to the **Maintenance** user role. This means that the device's configuration data are not write-protected and can be edited at all times.
Once a password has been defined, devices can be switched to the **Maintenance** user role if the correct password is entered in the **Password** parameter. A new password becomes valid once it has been verified after being entered in the **Confirm new password** parameter.

The password must contain a minimum of 4 and a maximum of 16 characters and can consist of both letters and numbers. Leading and trailing spaces not used as part of the password. If you lose your password, please contact the Endress+Hauser sales organization.

User entry ..... (enter the password)

Confirm new password

Navigation System → User management → Define password → Confirm new password

Description Use this function to confirm the new password that has been defined.

Additional information A new password becomes valid once it has been verified after being entered in the **Confirm new password** parameter.

The password must contain a minimum of 4 and a maximum of 16 characters and can consist of both letters and numbers. Leading and trailing spaces not used as part of the password. If you lose your password, please contact the Endress+Hauser sales organization.

User entry ..... (enter the password)

Status password entry

Navigation System → User management → Define password → Status password entry

Description Displays the status of the password verification.
- Password accepted
- Wrong password
- Password rules violated
- Permission denied
- Incorrect input sequence
- Invalid user role
- Confirm PW mismatch
- Reset password accepted

Enter password

Navigation System → User management → Enter password

Prerequisite The **Operator** user role must be active.

Description Use this function to enter a password for the selected user role to gain access to the functions of this role.

User entry Enter the defined password.

Status password entry

Navigation System → User management → Enter password → Status password entry

Description → 87

Reset password

Navigation System → User management → Reset password

Prerequisite The **Operator** user role must be active.

Description Use this function to enter the reset code to reset the current password.

CAUTION

Current password is lost.
- Only use the reset code if you have lost the current password. Contact the Endress +Hauser Sales Center.

User entry Activate the text box and enter the reset code.

Status password entry

Navigation System → User management → Reset password → Status password entry

Description → 87

Logout

Navigation System → User management → Logout

Prerequisite The **Maintenance** user role must be active.

Description The **Maintenance** user role is exited and the system switches to the **Operator** user role.

User entry Activate the button.

Change password

Navigation System → User management → Change password

Prerequisite The **Maintenance** user role must be active.

Description
- Old password:
  Use this function to enter the current password to then be able to make changes to the existing password.
- New password: → 85
- Confirm new password: → 85

User entry
1. ..... (enter the old password)
2. ..... (enter the new password)
3. ..... (confirm the new password)

Status password entry

Navigation System → User management → Change password → Status password entry

Description → 87

Delete password

Navigation System → User management → Delete password

Prerequisite The **Maintenance** user role must be active.

Description Use this function to enter the current password in order to delete the existing password. The **Define password** button then appears.

User entry
1. Activate the **Delete password** button.
2. ..... (enter the existing password)

14.3.3 Submenu: Bluetooth configuration

Bluetooth

Navigation System → Bluetooth configuration → Bluetooth

Description Use this function to enable or disable the Bluetooth® function.
- Off: The Bluetooth® interface is disabled immediately.
- On: The Bluetooth® interface is enabled and a connection to the device can be established.

The Bluetooth® interface is only available if the CDI interface is not used.

Options
- Off
- On

Factory setting On

Bluetooth status

Navigation System → Bluetooth configuration → Bluetooth status

Description Displays whether the Bluetooth® function is available. Bluetooth® communication is only possible if the CDI interface is not used.

User interface Three states can be displayed:
- Disabled by software
- Disabled by hardware
- Blocked by CDI

Change Bluetooth password [1)]

1) Function is only visible in the SmartBlue app

Navigation System → Bluetooth configuration → Change Bluetooth password

Description Use this function to change the Bluetooth® password. This function is visible in the SmartBlue app only.

Prerequisite The Bluetooth® interface is enabled (ON) and a connection to the device is established.

User entry Enter:
- User name
- Current password
- New password
- Confirm new password

Press OK to confirm your entries.

14.3.4 Submenu: Information

Submenu: Device

Squawk

Navigation System → Information → Device → Squawk

Description This function can be used locally to facilitate the identification of the device in the field. Once the Squawk function has been activated, all the segments flash on the display.

Options
- **Squawk once**: Display of device flashes for 60 seconds and then returns to normal operation.
- **Squawk on**: Display of device flashes continuously.
- **Squawk off**: Squawk is switched off and the display returns to normal operation.

User entry Activate the relevant button

Serial number

Navigation System → Information → Device → Serial number

Description Displays the serial number of the device. It can also be found on the nameplate.

Uses of the serial number
- To identify the measuring device quickly, e.g. when contacting Endress+Hauser.
- To obtain specific information on the measuring device using the Device Viewer: www.endress.com/deviceviewer

User interface Max. 11-digit character string comprising letters and numbers.

Order code

Navigation System → Information → Device → Order code

Description Displays the order code of the device. It can also be found on the nameplate. The order code is generated from the extended order code, which defines all the device features of the product structure. In contrast, the device features cannot be read directly from the order code.

Uses of the order code
- To order an identical spare device.
- To identify the device quickly and easily, e.g. when contacting Endress+Hauser.

Firmware version

Navigation System → Information → Device → Firmware version

Description Displays the device firmware version that is installed.

User interface Max. 6-digit character string in the format xx.yy.zz

Hardware version

Navigation System → Information → Device → Hardware version

Description Displays the hardware version of the device.

User interface Max. 6-digit character string in the format uu.vv.ww

Extended order code (n)

n = Number of parts of the extended order code (n = 1 to 3)

Navigation System → Information → Device → Extended order code n

Description Displays the first, second and/or third part of the extended order code. On account of length restrictions, the extended order code is split into a maximum of 3 parameters. The extended order code indicates the version of all the features of the product structure for the device and thus uniquely identifies the device. It can also be found on the nameplate.

Uses of the extended order code
- To order an identical spare device.
- To check the ordered device features using the delivery note.

Device name

Navigation System → Information → Device → Device name

Description Displays the device name. It can also be found on the nameplate.

Manufacturer

Navigation System → Information → Device → Manufacturer

Description Displays the name of the manufacturer.

Submenu: HART info

Device type

Navigation System → Information → HART info → Device type

Description Displays the device type with which the device is registered with the FieldComm Group. The device type is specified by the manufacturer. It is needed to assign the appropriate device description file (DD) to the device.

User interface 4-digit hexadecimal number

Factory setting 0x11D1

Device revision

Navigation System → Information → HART info → Device revision

Description Displays the device revision with which the device is registered with the FieldComm Group. It is needed to assign the appropriate device description file (DD) to the device.

User interface Revision in hexadecimal format

Factory setting 0x03

HART revision

Navigation System → Information → HART info → HART revision

Description Displays the HART revision of the device.

Factory setting 0x07

HART descriptor

Navigation System → Information → HART info → HART descriptor

Description Use this function to define a description for the measuring point.

User entry Up to 16 alphanumeric characters (uppercase letters, numbers and special characters)

Factory setting 16 x '?'

HART message

Navigation System → Information → HART info → HART message

Description Use this function to define a HART message which is sent via the HART protocol when requested by the master.

User entry Up to 32 alphanumeric characters (uppercase letters, numbers and special characters)

Factory setting 32 x '?'

Hardware revision

Navigation System → Information → HART info → Hardware revision

Description Displays the hardware revision of the device. The hardware revision is also transmitted in command 0.

Software revision

Navigation System → Information → HART info → Software revision

Description Displays the software revision of the device. The software revision is also transmitted in command 0.

HART date code

Navigation System → Information → HART info → HART date code

Description Use this function to define date information for individual use.

User entry Date in the format year-month-day (YYYY-MM-DD)

Factory setting 2010-01-01 [1)]

1) Also 01.01.2010 depending on the operating tool

Manufacturer ID

Navigation System → Information → HART info → Manufacturer ID

Description Displays the manufacturer ID under which the device is registered with the FieldComm Group.

User interface 4-digit hexadecimal number

Factory setting 0x0011

Device ID

Navigation System → Information → HART info → Device ID

Description A unique HART identifier is saved in the device ID and used by the control systems to identify the device. The device ID is also transmitted in command 0. The device ID is determined unambiguously from the serial number of the device.

User interface ID generated for specific serial number

Submenu: Device location

Latitude

Navigation System → Information → Device location → Latitude

Description Use this function to enter the latitude coordinates that describe the device location.

User entry −90.000 to +90.000 °

Factory setting 0°

Longitude

Navigation System → Information → Device location → Longitude

Description Use this function to enter the longitude coordinates that describe the device location.

User entry −180.000 to +180.000 °

Factory setting 0°

Altitude

Navigation System → Information → Device location → Altitude

Description Use this function to enter the altitude data that describe the device location.

User entry $-1.0 \cdot 10^{+20}$ to $+1.0 \cdot 10^{+20}$ m

Factory setting 0 m

Location method

Navigation System → Information → Device location → Location method

Description Use this function to select the data format for specifying the geographic location. The codes for specifying the location are based on the US National Marine Electronics Association (NMEA) Standard NMEA 0183.

Options
- No fix
- GPS or Standard Positioning Service (SPS) fix
- Differential PGS fix
- Precise positioning service (PPS)
- Real Time Kinetic (RTK) fixed solution
- Real Time Kinetic (RTK) float solution
- Estimated dead reckoning
- Manual input mode
- Simulation mode

Factory setting Manual input mode

Location description

Navigation System → Information → Device location → Location description

Description Use this function to enter a description of the location so that the device can be located in the plant.

User entry Up to 32 alphanumeric characters (letters, numbers and special characters)

Factory setting 32 x '?'

Process unit tag

Navigation System → Information → Device location → Process unit tag

Description Use this function to enter the process unit in which the device is installed.

User entry Up to 32 alphanumeric characters (letters, numbers and special characters)

Factory setting 32 x '?'

14.3.5 Submenu: Display

Display interval

Navigation System → Display → Display interval

Description Use this function to set the length of time the measured values are displayed if the values alternate on the local display. This type of change is only generated automatically if several measured values are specified.

The **Value 1 display - Value 3 display** parameters are used to specify which measured values are shown on the local display.

User entry 4 to 20 s

Factory setting 4 s

Value 1 display (Value 2 or 3 display)

Navigation System → Display → Value 1 display (Value 2 or 3 display)

Description Use this function to select one of the measured values shown on the local display.

Options
- Process value
- Device temperature
- Output current
- Percent of range
- Off [1)]

1) Not for Value 1 display

Factory setting
- Value 1 display: process value
- Value 2 and 3 display: off

Decimal places 1 (decimal places 2 or 3)

Navigation System → Display → Format display → Decimal places 1 (Decimal places 2 or 3)

Prerequisite A measured value is defined in the parameter **Value 1 display** (Value 2 or 3 display).

Description Use this function to select the number of decimal places for the display value. This setting does not affect the accuracy of the device for measuring or calculating the value.

If **Automatic** is selected, the maximum possible number of decimal places is always shown on the display.

Options
- x
- x.x
- x.xx
- x.xxx
- x.xxxx
- Automatic

Factory setting Automatic

Display text 1 (2 or 3)

Navigation System → Display → Display text 1 (2 or 3)

Description Display text for this channel that appears on the screen in the 14-segment display.

User entry Enter the display text: the maximum text length is 8 characters.

Factory setting
- Display text 1: PV
- Display text 2 or 3: ----- (no text)

Index

0 ... 9

2-wire compensation (parameter) 76
4mA value (parameter) 79
20mA value (parameter) 79

A

Accessories
  Communication-specific 45
  Device-specific 44
  Service-specific 45
  System products 46
Actual diag channel n 66
Actual diagnostics (submenu) 65
Actual diagnostics 1 65
Actual diagnostics n 66
Alarm delay (parameter) 69
Altitude (parameter) 95
Assign current output (PV) (parameter) 81
Assign QV (parameter) 82
Assign SV (parameter) 82
Assign TV (parameter) 82

B

Bluetooth (parameter) 89
Bluetooth configuration (submenu) 89
Bluetooth status 89

C

Cable specification 16
Call./v. Dusen coeff. A, B and C (parameter) 77
Call./v. Dusen coeff. R0 (parameter) 77
CE mark 59
Change Bluetooth password (parameter) 89
Change password (parameter) 88
Configuration changed (parameter) 85
Configuration counter (parameter) 84
Confirm new password (parameter) 86
Connection type (parameter) 75
Current output (submenu) 79
Current output simulation (parameter) 68
Current trimming 4 mA (parameter) 80
Current trimming 20 mA (parameter) 81

D

Damping (parameter) 81
Decimal point (parameter) 97
Define password (parameter) 85
Delete password (parameter) 88
Device (submenu) 90
Device ID 94
Device location (submenu) 94
Device management (submenu) 83
Device name 91
Device reset (parameter) 84
Device revision 92
Device tag (parameter) 83
Device temperature 74
Device temperature max value (parameter) 72
Device temperature min value (parameter) 71
Device type 92
Diagnostic behavior (parameter) 70
Diagnostic event simulation (parameter) 67
Diagnostic events
  Diagnostic behavior 39
  Overview 40
  Status signals 39
Diagnostic list (submenu) 66
Diagnostic settings (submenu) 69
Display (submenu) 96
Display interval (parameter) 96
Display text (parameter) 97
Disposal 44
Document
  Function 4
Document function 4

E

Electronics 73
Enter password (parameter) 87
Event logbook (submenu) 66

F

Failure current (parameter) 80
Failure mode (parameter) 79
FieldCare
  Function range 27
  User interface 28
Final check
  Mounting 34
  Wiring 34
Firmware version 91

H

Hardware revision 93
Hardware version 91
HART address (parameter) 82
HART configuration (submenu) 81
HART date code (parameter) 93
HART descriptor (parameter) 93
HART info (submenu) 92
HART message (parameter) 93
HART revision 92
HART short tag (parameter) 83
HART® protocol
  Device variables 31

I

Information (submenu) 90

K

Kabelspezifikation 59

L

Last rectified diagnostic 65

Latitude (parameter) 94
Limit corrosion detection (parameter) 69
Linearization (submenu) 77
Location description (parameter) 95
Location method (parameter) 95
Locking status 84
Logout (parameter) 88
Longitude (parameter) 94

M
Manufacturer (parameter) 92
Manufacturer ID (parameter) 94
Measured values (submenu) 73
Min/max values (submenu) 71
Mounting location
  Field housing 12

N
New password (parameter) 86
No. of preambles (parameter) 83

O
Operating time 65
Operating time temperature ranges (submenu) 72
Operation options
  Onsite operation 21
  Operating tool 21
  Overview 21
  SmartBlue App 29
Order code 91
Order code (parameter) 90
Output current 74

P
Percent of range 74
Polynomial coeff. A, B (parameter) 78
Polynomial coeff. R0 (parameter) 78
Previous diag n channel 67
Previous diagnostics 66
Process unit tag (parameter) 96
Properties (submenu) 69
PV 74

Q
QV 75

R
Reference junction (parameter) 76
Reset configuration Changed flag (parameter) 85
Reset device temp. min/max values (parameter) 72
Reset password (parameter) 87
Reset sensor min/max values (parameter) 71
Return 44
RJ preset value (parameter) 76

S
Sensor (parameter) 72
Sensor (submenu) 75
Sensor line resistance (parameter) 69
Sensor lower limit (parameter) 78
Sensor max value (parameter) 71
Sensor min value (parameter) 71
Sensor offset (parameter) 77
Sensor raw value 73
Sensor simulation (parameter) 68
Sensor simulation value (parameter) 68
Sensor type (parameter) 75
Sensor upper limit (parameter) 79
Sensor value 73
Serial number 90
Simulation (submenu) 67
Software revision 93
Squawk (Assistant) 90
Status password entry (parameter) 86, 87, 88
Status signal (parameter) 70
Structure of operating menu 24
SV 74
System (menu) 65, 73, 83
System products 46

T
Thermocouple diagnostic (parameter) 70
Time stamp n 66, 67
Timestamp 65
Troubleshooting
  Application error with RTD sensor connection 38
  Application error with TC sensor connection 38
  General errors 37
TV 74

U
Unit (parameter) 75
User management (submenu) 85

V
Value current output (parameter) 68
Value display (parameter) 96
Version data for the device 31

W
Workplace safety 8



www.addresses.endress.com

Endress+Hauser

People for Process Automation