DATA SHEET

T 8317 EN

Type 3371 Pneumatic Actuator

Application

Pneumatic linear actuators for mounting on Series V2001 Valves

Actuator area	**120 and 350 cm²**
Rated travel	**15 and 30 mm**



Fig. 1: *Type 3371 Actuator with 120 cm² actuator area mounted on a Type 3321 Globe Valve*



Fig. 2: *Type 3371 Actuator with 350 cm² actuator area mounted on a Type 3321 Globe Valve*

The Type 3371 Pneumatic Actuators are used for mounting on Series V2001 Valves:

- Type 3321 Globe Valve
- Type 3323 Three-way Valve
- Type 3531 Globe Valve for Heat Transfer Oil
- Type 3535 Three-way Valve for Heat Transfer Oil

The actuators mainly consist of two diaphragm cases, a diaphragm and internal springs. The actuator is connected to the valve bonnet using a yoke.

The diaphragm casing of the Type 3371 Actuator is available made of the following materials depending on the actuator size:

- 120 cm²: Diaphragm cases made of die-cast aluminum
- 350 cm²: Diaphragm cases made of sheet steel

Special features

- Permissible operating temperatures from -35 to +90 °C
- Mounting on valves in nominal sizes DN 15 to 100

Versions

– **Standard version of Type 3371 with 120 cm² actuator area:** Mounted on Type 3321 and Type 3323 Valves (DN 15 to 50) as well as on Type 3531 and Type 3535 Valves (DN 15 to 80)

– **Standard version of Type 3371 with 350 cm² actuator area:** Mounted on Type 3321 Valves (DN 65 to 100) as well as on Type 3323 Valves (DN 65 to 100)

Accessories

– **Type 4744-2 Limit Switch** · With flameproof enclosure II 2G Ex db IIC T6-T5 and degree of protection IP66 · ▶ T 8367

SAMSON AKTIENGESELLSCHAFT
Weismüllerstraße 3 · 60314 Frankfurt am Main, Germany
Phone: +49 69 4009-0 · samson@samsongroup.com · www.samsongroup.com

Edition April 2021

Further versions of Type 3371 with 120 cm² actuator area

– Mounting on Type 3321 and Type 3323 Valves in **DN 65 to 100**

Principle of operation

The signal pressure p_{st} creates the force $F = p_{st} \cdot A$ at the diaphragm surface A, which is opposed by the springs in the actuator. The bench range is determined by the number of actuator springs used and their compression, taking into account the rated travel. The travel H is proportional to the signal pressure p_{st}. The direction of action of the actuator stem depends on how the springs are installed in the actuator and the location of the signal pressure connection.

The stem connector clamps connect the actuator stem with the plug stem of the valve.

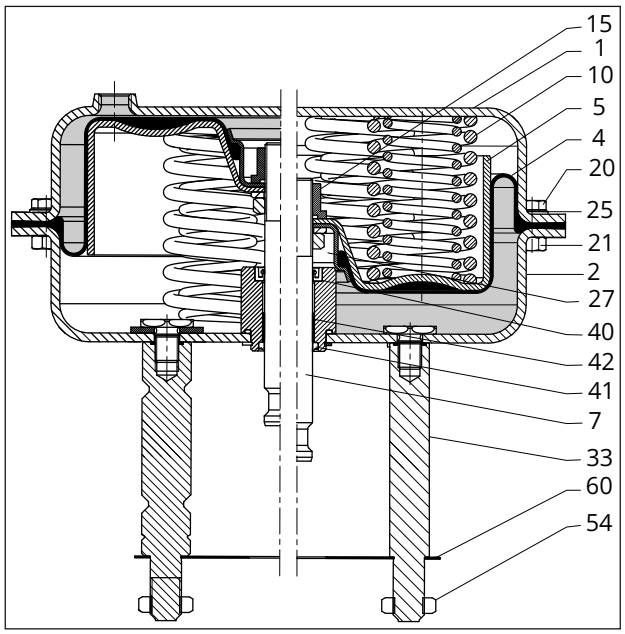

Fig. 3: *Type 3371 Actuator with 350 cm² actuator area*
Left: actuator stem retracts (FE)
Right: actuator stem retracts (FA)

1	Diaphragm case (top)	25	Washer
2	Diaphragm case (bottom)	27	Compressor
4	Diaphragm	33	Stem
5	Diaphragm plate	40	Radial shaft seal
7	Actuator stem	41	Wiper ring
10	Compression spring	42	Dry bearing
15	Collar nut	54	Hex nut (for 33)
20	Hex bolt	60	Plate
21	Hex nut		

Fail-safe action

When the signal pressure is reduced or the air supply fails, the fail-safe position of the control valve depends on whether the springs are installed in the top or bottom diaphragm chamber.

Actuator stem extends:

– When the signal pressure is reduced or the air supply fails, the springs move the actuator stem downward. This causes a mounted globe valve to close. In three-way valves, port **B** is closed when the valve is used for mixing service and port **A** is closed when the valve is used for diverting service.
The valve opens when the signal pressure is increased enough to overcome the force exerted by the springs.

Actuator stem retracts:

– When the signal pressure is reduced or the air supply fails, the springs move the actuator stem upward. This causes a mounted globe valve to open. In three-way valves, port **A** is closed when the valve is used for mixing service and port **B** is closed when the valve is used for diverting service.
The valve closes when the signal pressure is increased enough to overcome the force exerted by the springs.

On/off service

In on/off service, the supply pressure must be limited depending on the bench range or operating range of the actuator.

With “actuator stem retracts” direction of action, the supply pressure must not exceed the upper bench range value by more than 3 bar at the maximum.

Bench range	Fail-safe action	Max. supply pressure
0.4 to 1.4 bar	Actuator stem retracts (FE)	4.4 bar
1.4 to 2.3 bar		5.3 bar
1.5 to 2.1 bar		5.1 bar

With “actuator stem extends” direction of action, the supply pressure must not exceed the upper bench range value by more than 1.5 bar.

Table 1: *Technical data of Type 3371 Pneumatic Actuator*

Actuator area		**120 cm²**				**350 cm²**			
Rated travel	mm	15				15		30	
Fail-safe action		Stem retracts (FE)	Stem retracts (FE)	Stem extends (FA)	Stem extends (FA)	Stem retracts (FE)	Stem extends (FA)	Stem retracts (FE)	Stem extends (FA)
Bench range	bar	0.4 to 1.4	1.4 to 2.3	1.4 to 2.3	2.1 to 3.3	1.5 to 2.1	2.1 to 2.7	1.5 to 2.7	2.2 to 3.8
Supply pressure	bar	Max. 6[1)]							
Ambient temperature range	°C	-35 to +90				-35 to +90			
Approx. weight	kg	3.3				15			

1) Observe supply pressure restriction.

Table 2: *Materials for Type 3371 Pneumatic Actuator*

Actuator area	**120 cm²**	**350 cm²**
Actuator housing	GD-AlSi10Mg	1.0332
Diaphragm	NBR	NBR
Actuator stem	1.4305	1.4401/1.4404

Technical data of Type 4744-2 Limit Switch (see Data Sheet ▶ T 8367)

Table 3: *Bench ranges*

Actuator area in cm²	**Rated travel in mm**	**Travel volume at rated travel in dm³**	**Bench range in bar (signal pressure range at rated travel)**	**Number of springs**	**Additional possible spring compression**	**Fail-safe action: actuator stem extends (FA)**		**Fail-safe action: actuator stem retracts (FE)**				
								Spring force in kN at rated travel and supply pressure of ... bar				
						Spring force at 0 mm travel in kN	**Spring force at rated travel in kN**	**2**	**3**	**4**	**5**	**6**
120	15	1800	0.4 to 1.4	4	–	0.5	1.7	0.7	1.9	3.1	–	–
		1800	1.4 to 2.3	8		1.7	2.8	–	0.8	2	3.2	4.4
		1800	2.1 to 3.3	12		2.5	4.0	–	–	–	–	–
350	15	5250	1.5 to 2.1	8		–	–	–	3.15	6.65	6.65	6.65
		5250	2.1 to 2.7	6		7.35	9.5	–	–	–	–	–
	30	10500	1.5 to 2.7	8		–	–	–	1.05	4.55	8.05	11.55
		10500	2.2 to 3.8	12		7.7	13	–	–	–	–	–

Mounting types

There are two types of mounting depending on the valve/actuator combination: mounting using a crossbeam or rods.

When the actuator is mounted to the valve using a crossbeam (form B, see Fig. 4), the actuator is fastened to the valve bonnet using a central nut.

When the actuator is mounted on rods (form C, see Fig. 5) the actuator is connected to the valve bonnet using rods. In this case, a crossbeam is not required for mounting the actuator. A plate keeps the correct distance between rods on the version with 350 cm² actuator area (form C, see Fig. 6).

Table 4: *Mounting types*

	Actuator area	**120 cm²**	**350 cm²**	
	Travel	**15 mm**	**15 mm**	**30 mm**
Valve type	**Nominal size DN**			
3321	15 to 50	Form B	–	–
3321	65 to 100	Form C	Form C	–
3321	100	–	–	Form C
3323	15 to 50	Form B	–	–
3323	65 to 80	–	Form C	–
3323	100	–	–	Form C
3531	15 to 80	Form B	–	–
3535	15 to 80	Form B	–	–

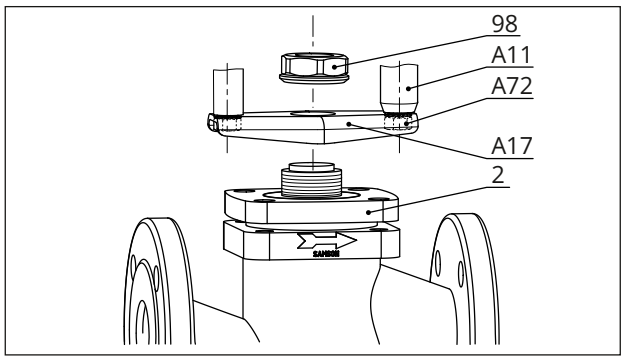

Fig. 4: *Mounting using crossbeam (form B)*

2 Valve bonnet
98 Central nut
A11 Rod
A17 Crossbeam
A72 Rod nut

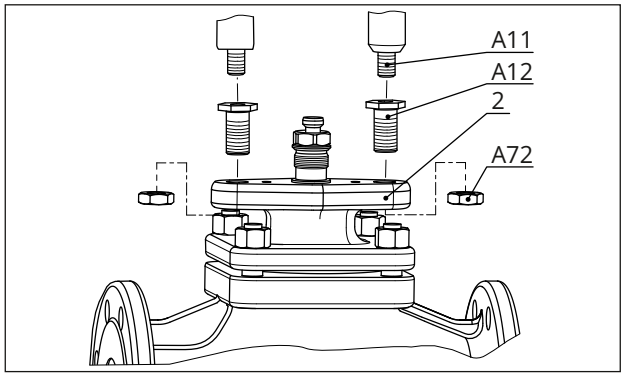

Fig. 5: *Mounting using rods (form C), 120 cm²*

2 Valve bonnet
A11 Rod
A12 Bushing
A72 Rod nut

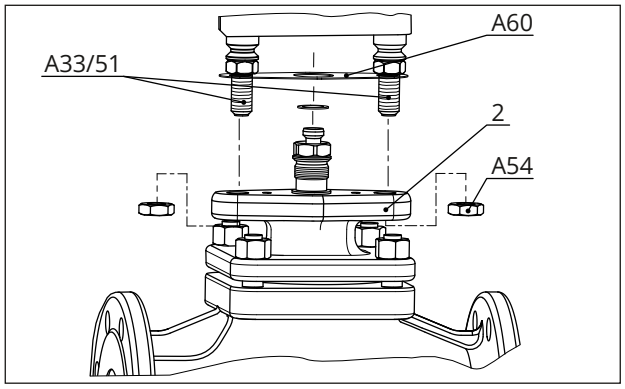

Fig. 6: *Mounting using rods (form C), 350 cm²*

2 Valve bonnet
A33/51 Rod
A54 Rod nut
A60 Plate

Dimensions

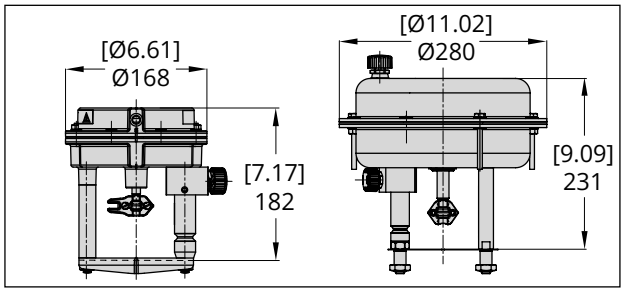

Fig. 7: *Specifications in mm [inch]*
Left: Type 3371/120 cm²
Right:Type 3371/350 cm²

Ordering text

Actuator	Type 3371
Mounting on the valve	Type ...
Actuator area	120 or 350 cm²
Travel	15 or 30 mm
Bench range	See Table 3
Direction of action	Actuator stem extends (FA) Actuator stem retracts (FE)
Valve accessories	e.g. Type 4744-2 Limit Switch