TI01797C/07/EN/01.24-00
71665756
2024-05-01

Technical Information
CAV01

Flow assembly for optical sensors



Application

The flow assembly CAV01 is suitable for bypass measurements of various parameters, such as SAC_{254}, TOCeq, CODeq, BODeq, DOCeq, turbidity, solids, APHA Hazen color, and nitrate in the following applications:

- Drinking water treatment and drinking water network monitoring
- Quality control of all measuring points in drinking water production
- Pipe water monitoring
- Process water treatment and process water monitoring
- Cooling water and condensate monitoring
- Monitoring of municipal and industrial wastewater
- Control of aeration basins

Your benefits

- Longer maintenance intervals: Optimized, automatic compressed air cleaning extends maintenance periods.
- Minimized water loss: Precise measurement with a low sample flow rate
- Robust design: Suitable for process pressures up to 6 bar (87 psi) and temperatures up to 50 °C (122 °F)
- Full compatibility: Works with all path lengths of Memosens Wave CAS80E and Viomax CAS51D
- Easy installation: Features a pre-installed wall holder and fixed sensor alignment
- Quick maintenance: Tool-free removal facilitates fast maintenance.

Endress+Hauser
People for Process Automation

Function and system design

Measuring system

A complete measuring system comprises:
- Sensor, e.g Memosens Wave CAS80E or Viomax CAS51D
- Liquiline CM44x multi-channel transmitter
- Flow assembly CAV01

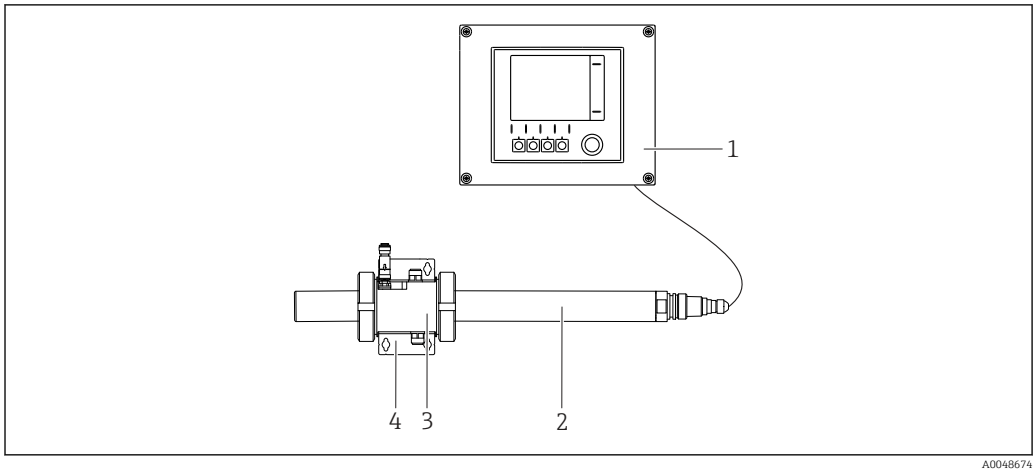

1 Measuring system

1 Transmitter
2 Sensor
3 Flow assembly
4 Holder

Installation

Orientation

Assembly in the bypass

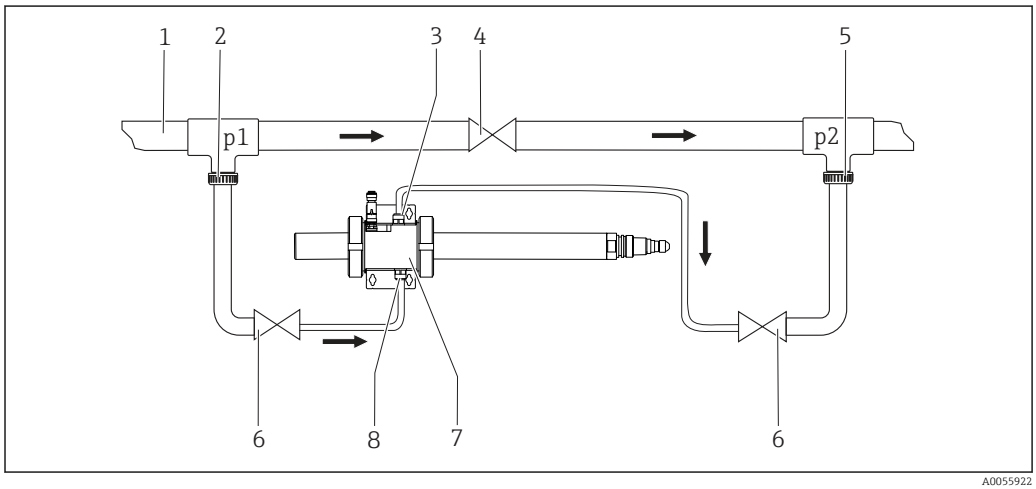

2 Connection diagram using the example of CAS80E, arrow indicates the flow direction

1 Main pipe
2 Medium sampling
3 Medium outlet
4 Adjustment and shut-off valve or orifice plate
5 Medium return
6 Adjustment and shut-off valves
7 Flow assembly
8 Medium inlet
p1 Pressure
p2 Pressure

To achieve flow through the assembly with a bypass, pressure p1 must be higher than pressure p2. No measures to increase pressure are required for branch pipes that branch off from the main pipe (no return medium).

Assembly in open outlet

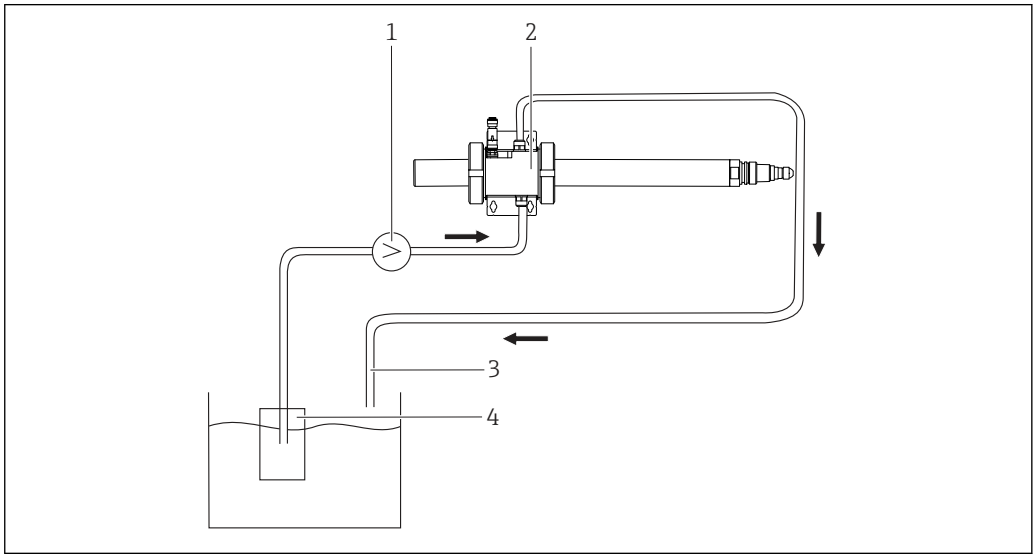

3 Connection diagram with open outlet using the example of CAS80E, arrow indicates the flow direction

1 Pump
2 Flow assembly
3 Open outlet
4 Filter unit

As an alternative to operation in the bypass, it is also possible to direct the sample flow from a filter unit with an open outlet through the assembly.

Environment

Ambient temperature range

0 to 60 °C (32 to 140 °F)

Process

Process temperature range

0 to 50 °C (32 to 122 °F)

Pressure range

- Maximum 6 bar (87 psi) at 20 °C (68 °F)
- Maximum 4 bar (58 psi) at 50 °C (122 °F)

Pressure-temperature ratings

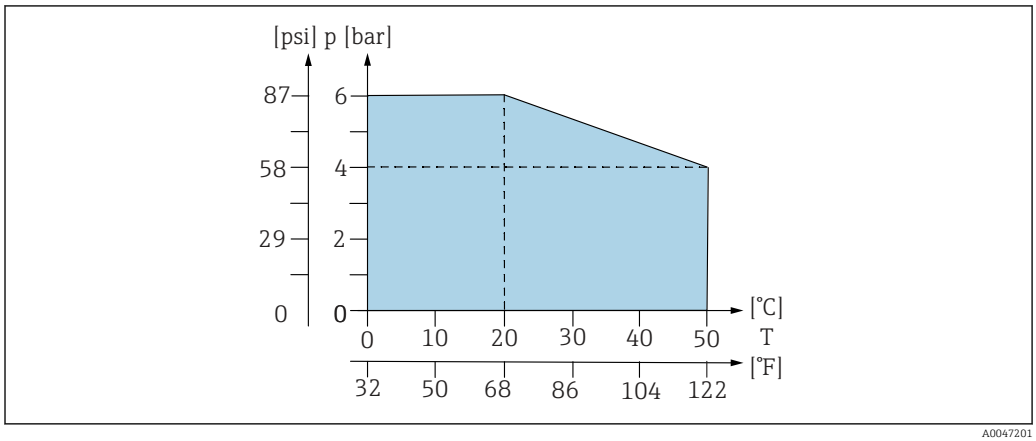

4 *Pressure/temperature ratings*

Flow limit

The flow limit depends on the sensor used and its properties. The data are based on water.

- Minimum 100 ml/h (0.026 gal/h)
- Maximum 10 l/h (2.64 gal/h)

Mechanical construction

Dimensions

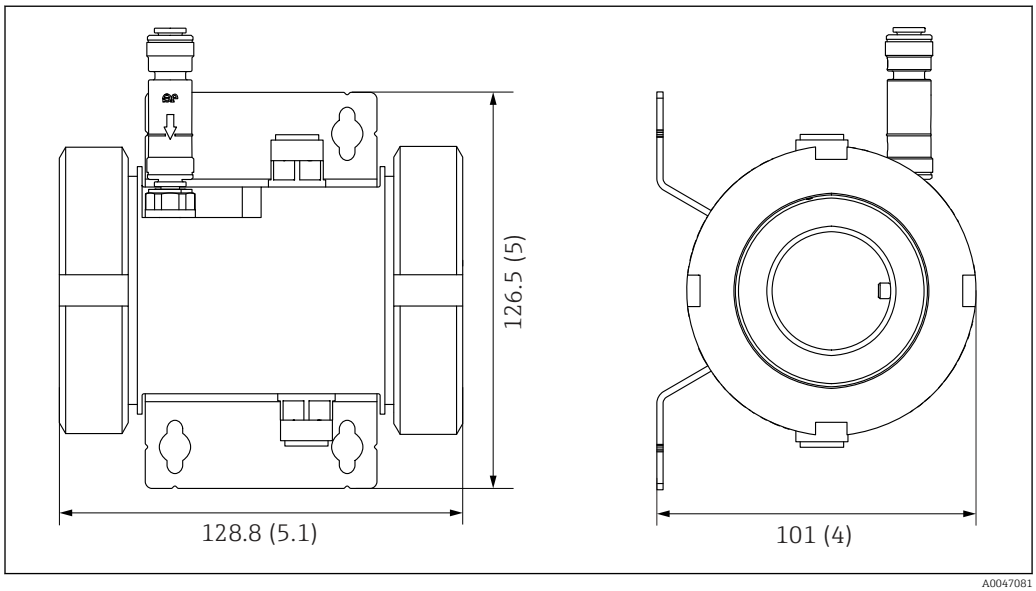

5 *Dimensions. Dimensions: mm (in)*

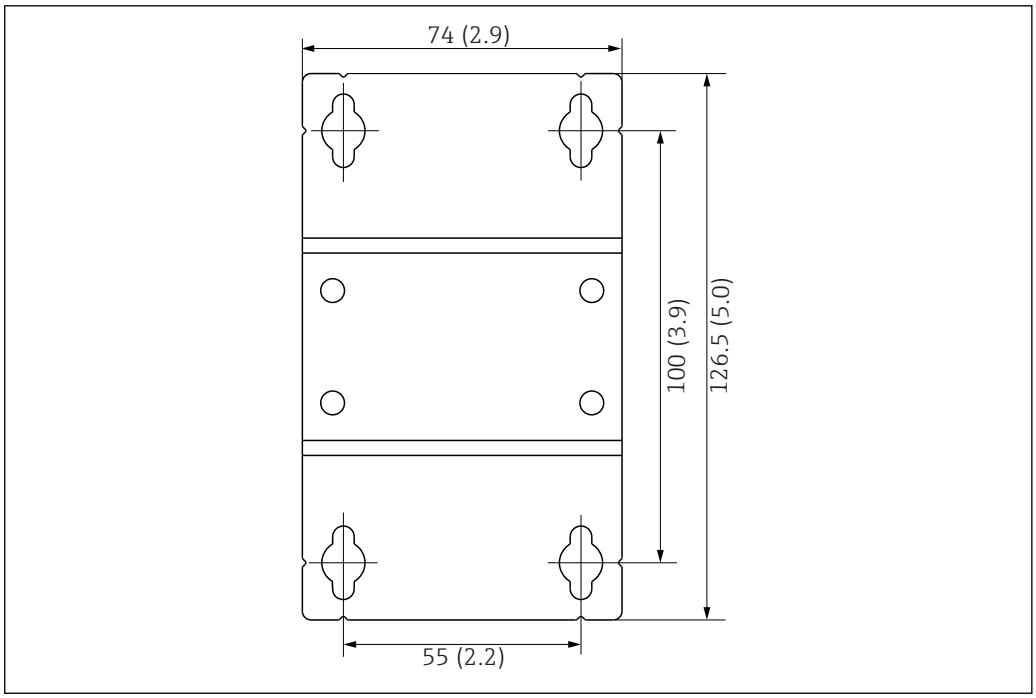

6 *Dimensions of wall holder Dimensions: mm (in)*

Weight	1.48 kg (3.26 lb)
Materials	**Wetted material**
	Housing: POM-C
	O-rings: EPDM
	Other parts: Stainless steel 1.4404, PTFE
Process connections	POM G1/4" DN6/8 (for hoses with outer diameter 8 mm (0.31 in))

Certificates and approvals

Current certificates and approvals for the product are available at www.endress.com on the relevant product page:

1. Select the product using the filters and search field.
2. Open the product page.
3. Select **Downloads**.

Ordering information

Scope of delivery	The scope of delivery comprises: ▪ Device, version as ordered ▪ Process connections POM G1/4" (optional) ▪ Operating instructions
Product page	www.endress.com/cav01
Product Configurator	1. **Configure**: Click this button on the product page.

2. Select **Extended selection**.
   ↳ The Configurator opens in a separate window.
3. Configure the device according to your requirements by selecting the desired option for each feature.
   ↳ In this way, you receive a valid and complete order code for the device.
4. **Accept**: Add the configured product to the shopping cart.

For many products, you also have the option of downloading CAD or 2D drawings of the selected product version.

5. **CAD**: Open this tab.
   ↳ The drawing window is displayed. You have a choice between different views. You can download these in selectable formats.

Accessories

The following are the most important accessories available at the time this documentation was issued.

Listed accessories are technically compatible with the product in the instructions.

1. Application-specific restrictions of the product combination are possible.
   Ensure conformity of the measuring point to the application. This is the responsibility of the operator of the measuring point.
2. Pay attention to the information in the instructions for all products, particularly the technical data.
3. For accessories not listed here, please contact your Service or Sales Center.

Device-specific accessories Process connection: POM G1/4" DN6/8



www.addresses.endress.com

Endress+Hauser

People for Process Automation