TI01769C/07/EN/02.26-00
71753453
2026-01-07

Technical Information
Memosens CCS55E

Digital sensor with Memosens technology for determining free bromine



Application

The Memosens CCS55E bromine sensor measures reliably in:
- seawater applications (e.g. desalination plants) - to ensure reliable disinfection and support efficient dosing
- Process and cooling water - where bromine disinfectants are used due to their reduced corrosion effect
- Food industry - for accurate monitoring of water in fish farming
- Pool water and therapeutic baths - where bromine is used due to the salinity of the water and as an alternative to chlorine

Your benefits

- Safe disinfection in seawater applications: Disinfecting seawater with free chlorine leads to the formation of bromine compounds. Since pure chlorine monitoring therefore causes measurement errors and also underestimates the disinfection performance, a bromine measurement is required.
- High plant availability: The Memosens 2.0 technology enables precalibration of the sensor and therefore fast sensor exchange. This, together with the fast polarization time of the sensor, increases plant availability.
- Efficient process control: The quick response time (T_{90} < 25 s) provides an accurate process view and thus enables a quick response to changes. The sensor is not inactivated in bromine-free media and thus conducts measurements again quickly after the addition of bromine.
- High process reliability: The precise and long-term stable measurement ensures consistent process monitoring and allows for customized disinfectant dosing.
- Broad measuring range for different applications: From trace measurement to bromine concentrations of 200 mg/l.
- Convenient combination with other liquid analysis parameters such as pH, conductivity or oxygen by connecting the sensors to the Liquiline-Messumformer.

Endress+Hauser
People for Process Automation

Table of contents

Function and system design 3
Measuring principle 3
Measuring system 3
Dependability 4

Input 5
Measured variables 5
Measuring range 5
Signal current 5

Power supply 5
Electrical connection 5

Performance characteristics 5
Reference operating conditions 5
Response time 5
Polarization time 6
Measured value resolution 6
Measurement error 6
Repeatability 6
Nominal slope 6
Long-term drift 6
Operating time of the electrolyte 6
Intrinsic consumption 6

Installation 6
Orientation 6
Immersion depth 7
Installation instructions 7

Environment 7
Ambient temperature range 7
Storage temperature range 7
Degree of protection 7

Process 7
Process temperature range 7
Process pressure 7
pH range 8
Conductivity 8
Flow limit 8
Flow 8

Mechanical construction 9
Dimensions 9
Weight 9
Materials 9
Cable specification 9

Certificates and approvals 9

Ordering information 10
Product page 10
Product Configurator 10
Scope of delivery 10

Accessories 10
Service-specific accessories 10
Device-specific accessories 10

Function and system design

Measuring principle

Free bromine is determined via hypobromous acid (HOBr) according to the amperometric measuring principle.

The hypobromous acid (HOBr) contained in the medium diffuses through the sensor membrane and is reduced to bromide ions (Br^-) at the gold working electrode. At the silver counter electrode, silver is oxidized to silver bromide. Electron donation at the gold working electrode and electron acceptance at the silver counter electrode causes a current to flow which is proportional to the concentration of free bromine in the medium at constant conditions.

The concentration of hypobromous acid (HOBr) depends on the pH value. An additional pH measurement should be used to compensate for this dependency.

The transmitter uses the current signal in nA to calculate the measured variable for concentration in mg/l (ppm).

The sensor can also measure organic bromination agents. A new calibration during commissioning is recommended for this.

Operating principle

The sensor consists of:
- Membrane cap (bypass with membrane)
- Sensor shaft with counter electrode with large surface area and a working electrode embedded in plastic

The electrodes are in an electrolyte which is separated from the medium by a membrane. The membrane prevents the electrolyte from leaking and protects against contaminant penetration.

The measuring system is calibrated by means of a colorimetric comparison measurement in accordance with the DPD method for free bromine. The determined reference value is entered into the transmitter, where it is used for adjustment.

Cross-sensitivity

There are cross-sensitivities for: total bromine, free chlorine, total chlorine, chlorine dioxide, ozone, hydrogen peroxide and peracetic acid.

Measuring system

A complete measuring system comprises:
- Disinfection sensor CCS55E (membrane-covered, Ø25 mm (0.98 in)) with appropriate mounting adapter
- Flowfit CYA27 flow assembly
- Measuring cable CYK10, CYK20
- Transmitter, e.g. Liquiline CM44x with firmware 01.13.00 or higher or CM44xR with firmware 01.13.00 or higher
- Optional: extension cable CYK11
- Optional: proximity switch
- Optional: Flexdip CYA112 immersion assembly
- Optional: CPS31E pH sensor

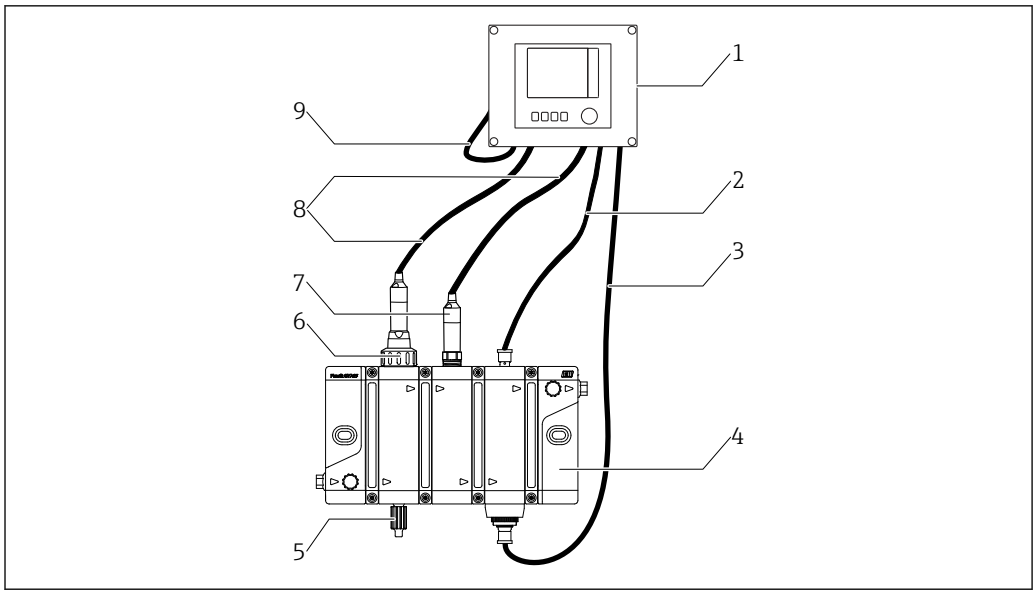

1 *Example of a measuring system*

1 *Transmitter Liquiline CM44x or CM44xR*
2 *Cable for inductive switch*
3 *Cable for status lighting on assembly*
4 *Flow assembly, e.g. Flowfit CYA27*
5 *Sampling valve*
6 *Disinfection sensor Memosens CCS55E (membrane-covered, Ø 25 mm)*
7 *pH sensor Memosens CPS31E*
8 *Measuring cable CYK10*
9 *Power supply cable Liquiline CM44x or CM44xR*

Dependability

Reliability

Memosens MEMOSENS

Memosens makes your measuring point safer and more reliable:
- Non-contact, digital signal transmission enables optimum galvanic isolation
- Dust- and waterproof (IP 68)
- Sensor can be calibrated in a lab, thus increasing the availability of the measuring point in the process
- Predictive maintenance thanks to recording of sensor data, e.g.:
  - Total hours of operation
  - Hours of operation with very high or very low measured values
  - Hours of operation at high temperatures
  - Calibration history

Maintainability

Easy handling

Sensors with Memosens technology have integrated electronics that store calibration data and other information (e.g. total hours of operation or hours of operating under extreme measuring conditions). Once the sensor has been connected, the sensor data are transferred automatically to the transmitter and used to calculate the current measured value. As the calibration data are stored in the sensor, the sensor can be calibrated and adjusted independently of the measuring point. The result:
- Easy calibration in the measuring lab under optimum external conditions increases the quality of the calibration.
- Precalibrated sensors can be replaced quickly and easily, resulting in a noticeable increase in the availability of the measuring point.
- Thanks to the availability of the sensor data, maintenance intervals can be accurately defined and predictive maintenance is possible.
- The sensor history can be documented on external data carriers and evaluation programs.
- Thus, the current application of the sensor can be determined depending on its previous history.

Security

Data security thanks to digital data transmission
Memosens technology digitizes the measured values in the sensor and transmits the data to the transmitter via a non-contact connection that is free from potential interference. The result:
- Automatic error message if sensor fails or connection between sensor and transmitter is interrupted
- Immediate error detection increases measuring point availability

Input

Measured variables	Free bromine (HOBr)	Hypobromous acid (HOBr) [mg/l, µg/l, ppm, ppb]
	Temperature	[°C, °F]
Measuring range	CCS55E-**31AD**	0 to 5 mg/l (ppm) HOBr
	CCS55E-**31BF**	0 to 20 mg/l (ppm) HOBr
	CCS55E-**31CJ**	0 to 200 mg/l (ppm) HOBr
Signal current	CCS55E-**31AD**	56 to 104 nA per 1 mg/l (ppm) HOBr
	CCS55E-**31BF**	14 to 26 nA per 1 mg/l (ppm) HOBr
	CCS55E-**31CJ**	14 to 26 nA per 1 mg/l (ppm) HOBr

Power supply

Electrical connection

is electrically connected to the transmitter is performed via the Memosens data cable CYK10.

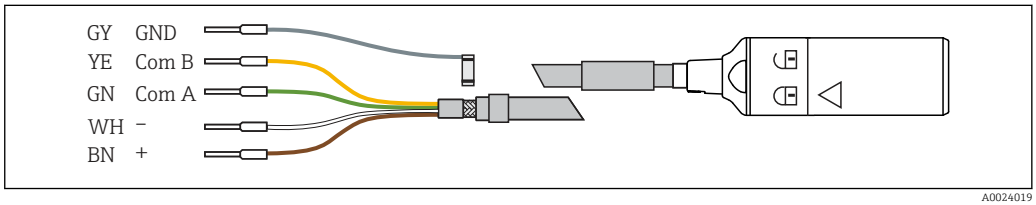

2 *Measuring cable CYK10*

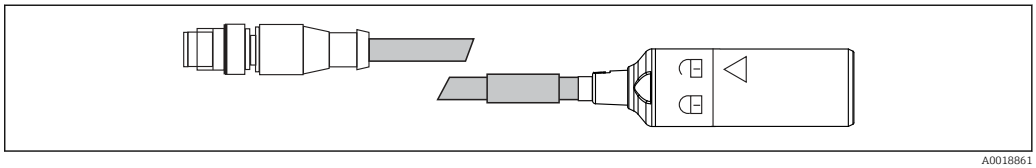

3 *CYK10 with M12 plug, electrical connection*

Performance characteristics

Reference operating conditions	Temperature	20 °C (68 °F)
	pH value	pH 6.5 ±0.2
	Flow	40 to 60 cm/s (15.7 to 23.6 in/s)
	HOBr-free base medium	Mains water
Response time	T_{90} < 20 s (after completing polarization)	

The T_{90} time can be longer under certain conditions. If the sensor is operated or stored in a bromine-free medium for a longer period, the sensor response starts immediately if bromine is present but only reaches the exact concentration value after a delay.

Polarization time

Initial commissioning	45 min
Recommissioning	20 min

Measured value resolution

CCS55E-**31AD**	0.03 µg/l (ppb) ClO_2
CCS55E-**31BF**	0.13 µg/l (ppb) ClO_2
CCS55E-**31CJ**	1.10 µg/l (ppb) ClO_2

At most, the smallest possible measured value resolution under reference conditions is 0.05 % of the measured value above the limit of quantification (LOQ).

Measurement error

±2 % and ±5 µg/l (ppb) of value measured (depending on which value is higher)

	LOD (limit of detection) [1]	LOQ (limit of quantification) [1]
CCS55E-** 31AD**	0.0008 mg/l (ppm)	0.0025 mg/l (ppm)
CCS55E-**31BF**	0.0026 mg/l (ppm)	0.0085 mg/l (ppm)
CCS55E-**31CJ**	0.0061 mg/l (ppm)	0.0203 mg/l (ppm)

1) Based on ISO 15839. The measurement error includes all the uncertainties of the sensor and transmitter (measuring chain). It does not contain all the uncertainties caused by the reference material and adjustments that may have been performed.

Repeatability

CCS55E-**31AD**	0.0017 mg/l (ppm)
CCS55E-**31BF**	0.0087 mg/l (ppm)
CCS55E-**31CJ**	0.0476 mg/l (ppm)

Nominal slope

CCS55E-**31AD**	80 nA per 1 mg/l (ppm) HOBr
CCS55E-**31BF**	20 nA per 1 mg/l (ppm) HOBr
CCS55E-**31CJ**	20 nA per 1 mg/l (ppm) HOBr

Long-term drift

< 1 % per month (mean value, determined while operating at varying concentrations and under reference conditions)

Operating time of the electrolyte

at 10 % of measuring range and 20 °C	2 years
at 50 % of measuring range and 20 °C	1 year
at maximum concentration and 55 °C	60 days

Intrinsic consumption

The intrinsic consumption of bromine at the sensor is negligible.

Installation

Orientation

NOTICE

Do not install upside down!

There is no secured electrolyte film on the work electrode and therefore no sensor function.

- ▶ Install the sensor in an assembly, support or appropriate process connection at an angle of at least 15 ° to the horizontal.
- ▶ Other angles of inclination are not permitted.
- ▶ Follow the instructions for installing the sensor in the Operating Instructions of the assembly used.

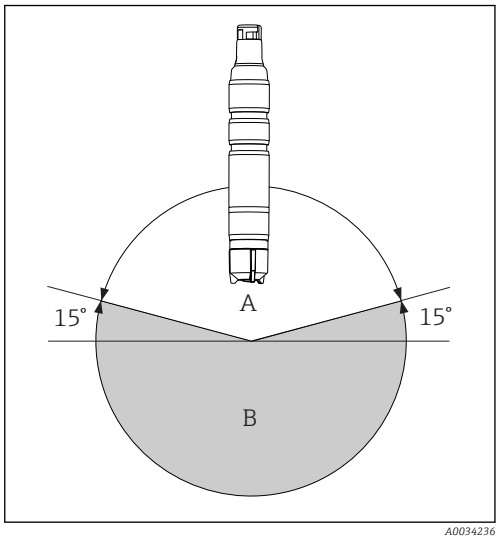

A Permitted orientation
B Incorrect orientation

Immersion depth

At least 50 mm (1.97 in).

This corresponds to the mark (▼) on the sensor.

Installation instructions

Installing the sensor in the Flowfit CYA27 assembly

The sensor can be installed in the Flowfit CYA27 flow assembly. In addition to the installation of the free bromine sensor, this assembly also enables the simultaneous operation of several other sensors and flow monitoring.

Please note the following during installation:
- Guarantee the minimum flow to the sensor 16 cm/s (0.52 ft/s) and the minimum volume flow of the assembly (5 l/h or 30 l/h).
- If the medium is fed back into an overflow basin, pipe or similar, the resulting counterpressure on the sensor may not exceed 1 bar relativ (14.5 psi relativ) (2 bar abs. (29 psi abs.)) and must remain constant.
- Avoid a vacuum at the sensor, e.g. due to medium being returned to the suction side of a pump.
- To avoid buildup, heavily contaminated water should also be filtered.

Environment

Ambient temperature range

−20 to 60 °C (−4 to 140 °F)

Storage temperature range

	Long-term storage up to 2 years (maximum)	Storage up to 48 h (maximum)
With electrolyte	0 to 35 °C (32 to 95 °F) (non-freezing)	35 to 55 °C (95 to 131 °F)
Without electrolyte	−20 to 60 °C (−4 to 140 °F)	

Degree of protection

IP68 (1.8 m (5.91 ft)) water column over 7 days at 20 °C (68 °F)

Process

Process temperature range

0 to 55 °C (32 to 130 °F), non-freezing

Process pressure

The inlet pressure depends on the specific fitting and installation.

The measurement can take place with a free outlet.

The medium pressure directly upstream from the sensor membrane may not exceed 1 bar (14.5 psi) (2 bar abs. (29 psi abs.)).

pH range

Range of effectiveness of free bromine	pH 5 to 10 [1]
Calibration	pH 5 to 9
Measurement	pH 5 to 10

1) At pH < 5 elemental bromine is formed from hypobromous acid and behaves differently to hypobromous acid when passing through the membrane. Furthermore, in the presence of chloride ions (Cl^-), bromine chloride can form, which can also lead to incorrect results.

Conductivity

The sensor can also be used in media with a very low conductivity, such as demineralized water. In this case, attention must be paid to the reduced pH buffer capacity of the medium. This is expressed in a pH value that is difficult to adjust and can affect the pH compensation.

The electrolyte should be replaced more frequently in these applications.

Flow limit

At least 5 l/h (1.3 gal/h), in the Flowfit CYA27 flow assembly (5 l version)

At least 30 l/h (7.9 gal/h), in the Flowfit CYA27 flow assembly (30 l version)

Flow

At least 16 cm/s (0.5 ft/s) , e.g. with Flexdip CYA112 immersion assembly

- In terms of sensor condition and performance, it is essential that the flow velocity limits specified in the following table be observed.

	Flow velocity [cm/s]	Volume flow [l/h]		
		Flowfit CYA27 (5 l version)	Flowfit CYA27 (30 l version)	Flexdip CYA112
Minimum	16	5	30	The sensor is suspended freely in the medium; pay attention to the minimum flow velocity of 16 cm/s during installation.
Maximum	80	30	60	

As the bromine sensor is more sensitive to changes in the flow velocity, it should ideally be installed at the last possible position in the Flowfit CYA27 assembly.

Mechanical construction

Dimensions

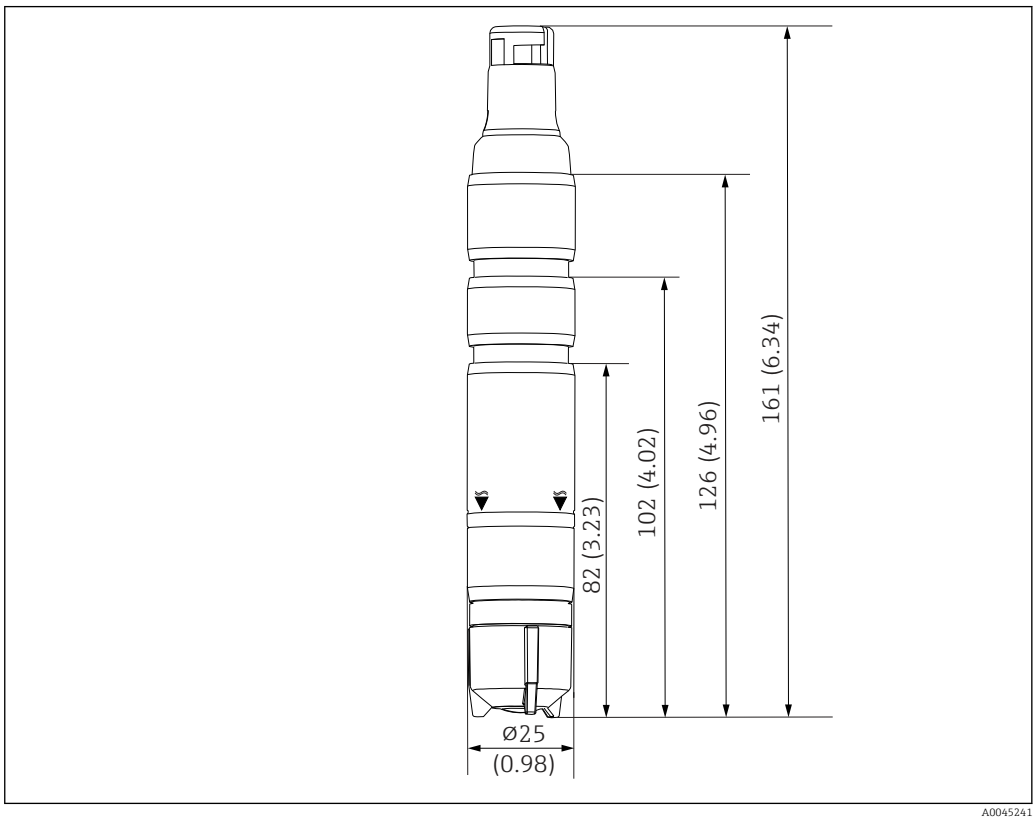

4 *Dimensions in mm (in)*

Weight

Sensor with membrane cap and electrolyte (without protection cap and without adapter)
Approx. 95 g (3.35 oz)

Materials

Sensor shaft	PVC
Membrane	PET
Membrane cap	PVDF
Protective cap	▪ Vessel: PC Makrolon (polycarbonate) ▪ Seal: Kraiburg TPE TM5MED ▪ Cover: PC Makrolon (polycarbonate)
Sealing ring	FKM
Sensor shaft coupling	PPS

Cable specification

max. 100 m (330 ft), incl. Cable extension

Certificates and approvals

Current certificates and approvals for the product are available via the Product Configurator at www.endress.com.

1. Select the product using the filters and search field.
2. Open the product page.

The **Configuration** button opens the Product Configurator.

Ordering information

Product page

www.endress.com/ccs55e

Product Configurator

Detailed ordering information is available from your nearest sales organization www.addresses.endress.com or in the Product Configurator at www.endress.com:

1. Select the product using the filters and search field.
2. Open the product page.
3. Select **Configuration**.

Product Configurator - the tool for individual product configuration
- Up-to-the-minute configuration data
- Depending on the device: direct input of information specific to the measuring point, such as the measuring range or operating language
- Automatic verification of exclusion criteria
- Automatic creation of the order code and its breakdown in PDF or Excel output format
- Ability to order directly in the Endress+Hauser Online Shop

Scope of delivery

The scope of delivery comprises:
- Disinfection sensor (membrane-covered, Ø25 mm) with protective cap (ready for use)
- Bottle with electrolyte (50 ml (1.69 fl oz))
- Replacement membrane cap in protective cap
- Operating instructions
- Manufacturer's certificate

Accessories

The following are the most important accessories available at the time this documentation was issued.

Listed accessories are technically compatible with the product in the instructions.

1. Application-specific restrictions of the product combination are possible.
   Ensure conformity of the measuring point to the application. This is the responsibility of the operator of the measuring point.
2. Pay attention to the information in the instructions for all products, particularly the technical data.
3. For accessories not listed here, please contact your Service or Sales Center.

Service-specific accessories

Maintenance kit CCV05

Order according to product structure

- 2 x membrane caps and 1 x electrolyte 50 ml (1.69 fl oz)
- 1 x electrolyte 50 ml (1.69 fl oz)
- 2 x sealing set

Device-specific accessories

Memosens data cable CYK10
- For digital sensors with Memosens technology
- Product Configurator on the product page: www.endress.com/cyk10

Technical Information TI00118C

Memosens data cable CYK11
- Extension cable for digital sensors with Memosens protocol
- Product Configurator on the product page: www.endress.com/cyk11

Technical Information TI00118C

Memosens laboratory cable CYK20
- For digital sensors with Memosens technology
- Product Configurator on the product page: www.endress.com/cyk20

Flowfit CYA27
- Modular flow assembly for multiparameter measurements
- Product Configurator on the product page: www.endress.com/cya27

Technical Information TI01559C

Flexdip CYA112
- Immersion assembly for water and wastewater
- Modular assembly system for sensors in open basins, channels and tanks
- Material: PVC or stainless steel
- Product Configurator on the product page: www.endress.com/cya112

Technical Information TI00432C

Photometer PF-3
- Compact hand-held photometer for determining the reference measured value
- Color-coded reagent bottles with clear dosing instructions
- Order No.: 71257946

Adapter kit CCS5x(D/E) for CYA27
- Clamping ring
- Thrust collar
- O-ring
- Order No. 71372027

Adapter kit CCS5x(D/E) for CYA112
- Adapter incl. O-rings
- 2 studs for locking in place
- Order No. 71372026

Complete quick fastener kit for CYA112
- Adapter, inner and outer parts incl. O-rings
- Tool for mounting and disassembly
- Order No. 71093377 or mounted accessory of CYA112

COY8

Zero-point gel for oxygen and disinfection sensors
- Disinfectant-free gel for the verification, zero point calibration and adjustment of oxygen and disinfection measuring points
- Product Configurator on the product page: www.endress.com/coy8

Technical Information TI01244C



www.addresses.endress.com

Endress+Hauser

People for Process Automation