ELECTRIC DRIVES
FOR EVERY DEMAND

# VEMoPM

## The Next Generation of High-Efficiency PM Machines



Scan to our electronic catalogue

For decades, VEM has been synonymous with high-performance, reliable electric machines that are used worldwide in a wide variety of industries. The company focuses on the development and manufacture of electric machines of the highest technical standard.

The VEM name has established itself as a mark of reliability and quality, combining high performance, operational safety, and a long service life. Our strength lies in our consistent focus on individual customer requirements: From standard motors and generators to custom-designed special drives, we offer solutions that combine the highest levels of efficiency, cost-effectiveness, and technical precision.

This catalog provides a comprehensive overview of our portfolio of permanently excited synchronous machines.

The solutions presented cover power ranges from 100 W to 100 MW across all relevant voltage levels and are characterized by reliability and flexibility. The availability of various shaft heights, designs, and lengths, as well as a wide range of configuration options, enables application-specific design. Based on this, we work with you to develop the optimal drive solution tailored precisely to your technical and economic requirements.

The new generation of permanent magnet synchronous machines, motors and generators was specifically designed to meet the increasing demands of modern industrial applications. The focus is on maximum energy efficiency, maximum flexibility, and a compact design that enables use in a wide variety of applications. Through the use of state-of-the-art design and manufacturing technologies, the machine series combines high power density with excellent efficiency, thus offering a future-proof drive solution for demanding applications.

A key advantage of permanent magnet synchronous machines lies in their exceptionally high efficiency, particularly in the frequently used partial-load range. PM machines achieve high efficiency even at low loads, since there are no excitation losses in the rotor. This results in lower energy consumption and reduced heat generation compared to conventional electric machines. This contributes to a significant increase in energy efficiency, particularly in applications with frequently changing load conditions or long partial-load phases. The optimized electromagnetic design ensures high performance across the entire operating range.

Thanks to their compact size and low weight, these machines are ideal for applications with limited installation space or high power-density requirements. At the same time, application-optimized pole counts are available, allowing speed, torque, and efficiency to be specifically tailored to the respective operating conditions.

Another key feature of the new machine series is its high flexibility. Different designs, a variety of cooling concepts, and the ability to operate with both the company's own drive systems and customer-specified frequency converters enable easy integration into existing machine and plant designs. Individual customer requirements can be taken into account as early as the development phase and implemented cost-effectively.

This new machine platform provides users with a powerful and adaptable drive system that combines maximum efficiency with state-of-the-art technology. The result is compact, cost-effective, and future-oriented solutions that meet both the increasing demands for energy savings and the growing diversity of industrial applications.

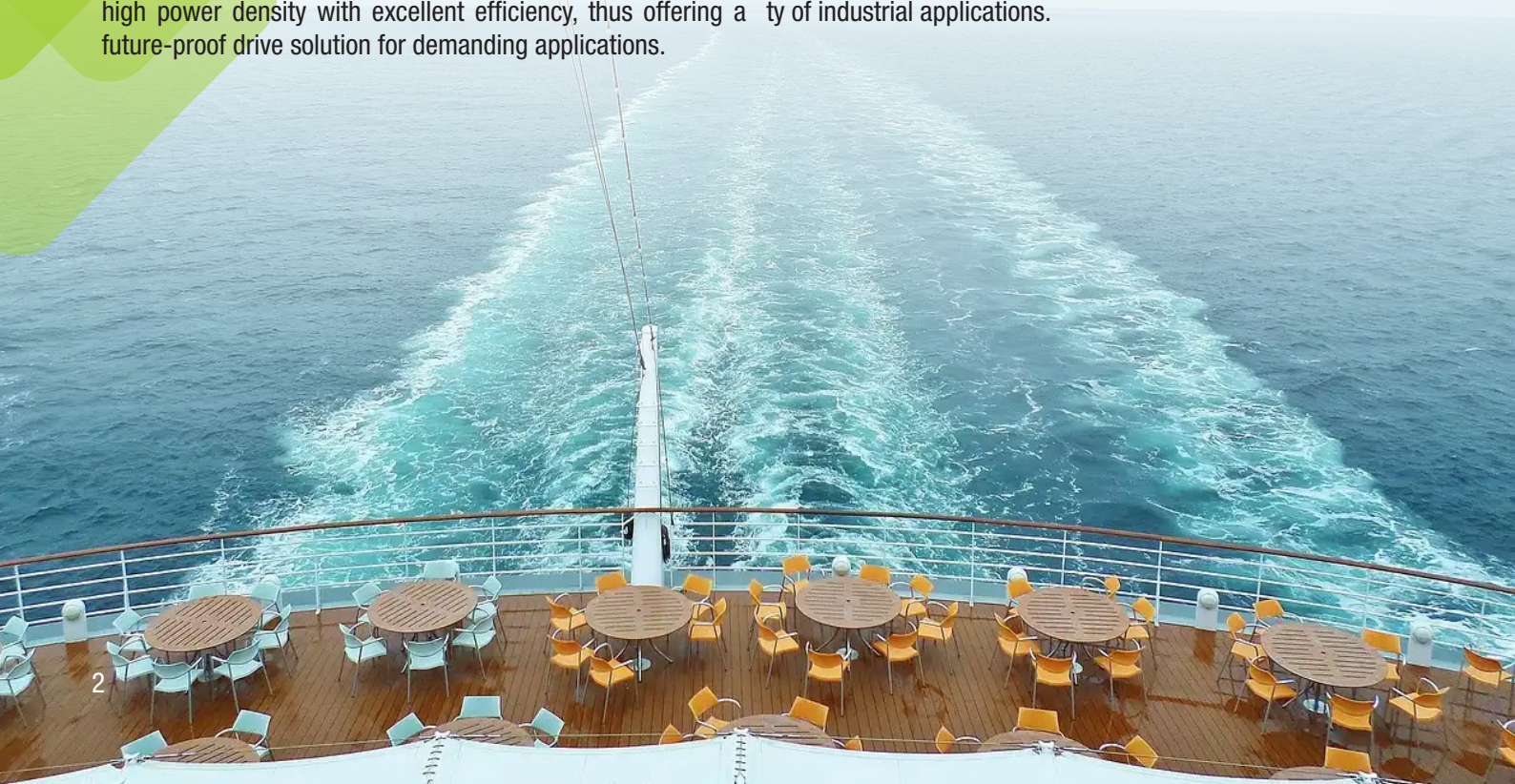

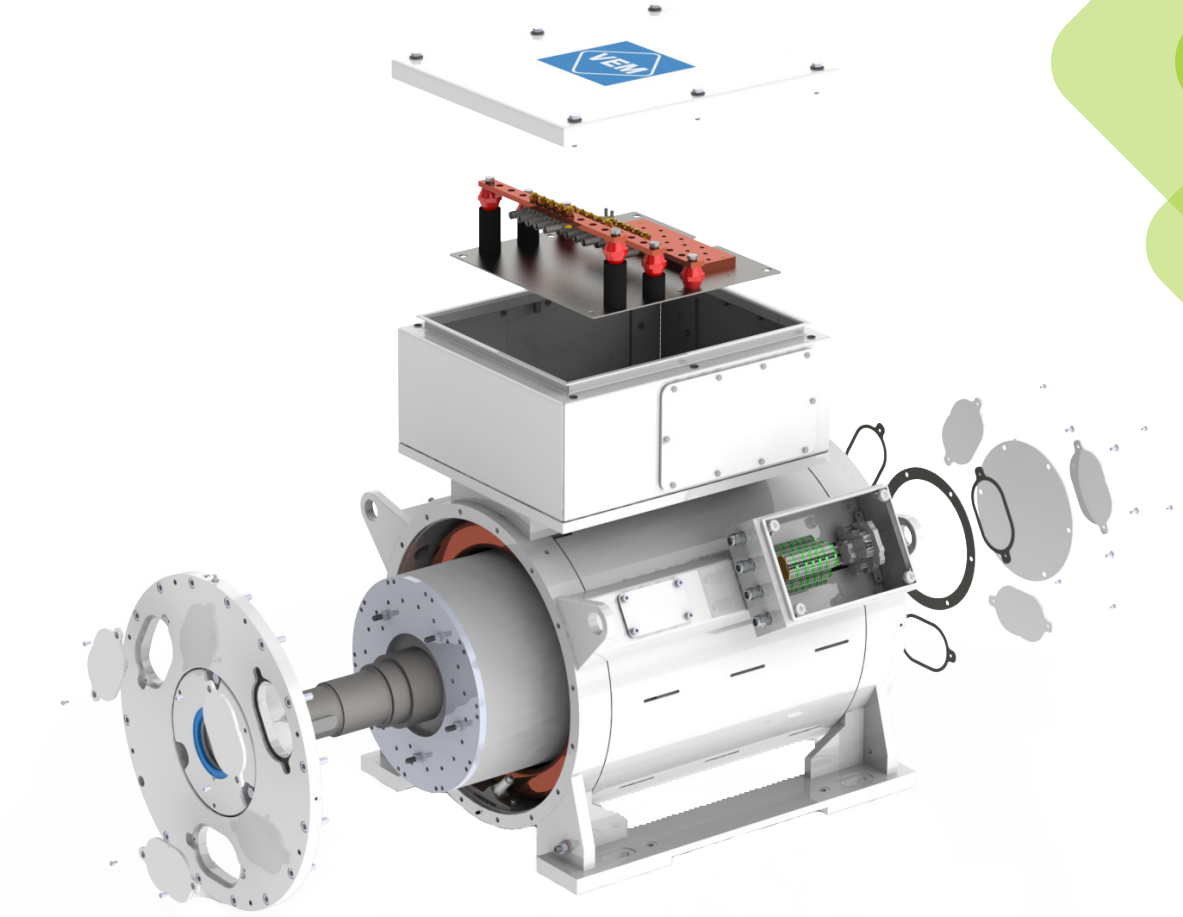

## Table of contents


Advantages 4
Technical applications 4
VEMoPM 5
General technical overview 5
Additional features & options 5
One VEM, Two options 6
Size 180 7
Size 225 8
Size 315 9
Size 450 10
Size 630 11
Size 800 12
All sizes 13
VEM service 14

## Advantages

- High efficiency class **IE5++** Especially efficient in partial load conditions, which reduces energy costs significantly.
- Reliable and compact: Space-saving, durable, and designed for demanding operation conditions.
- Low maintenance: Fewer parts that wear out, resulting in lower maintenance costs.
- Service-friendly: State-of-the-art accessibility of sensors and bearings keep downtime to a minimum.
- Low noise and vibration generation: Smooth operation for increased comfort and reduced impact on the surroundings.
- Individual customization options: Design and execution according to customer-specific requirements.
- Short delivery times: Quick availability for prompt project implementation.

## Technical applications

- Propulsion motors for marine vessels
- Thruster motors
- Generators / Motors for parallel hybrid applications
- Generators for combustion engines
- Motors and integrated motor components for winches, pumps, fans, compressors
- Traction motors for mobile vehicles
- Direct-Drive applications for industrial processes – presses, compressors, conveyors, lifts
- Generators for alternative energies – wind, water, gas and data centers



# VEMoPM

## General technical overview

| Category | Specification |
|---|---|
| **Motor type** | Synchronous permanent magnet machine |
| **Operation Mode** | Motor, Generator, PTI/PTO |
| **Duty Type** | S1 or S9; others on request |
| **Cooling Method** | IC 71 W - Water-glycol liquid cooled (IEC 60034-6; others on request) |
| **Mounting & Flange** | V1, B3, B20, B35; Standard SAE flange for Diesel Generators; others on request |
| **Protection Degree** | IP54 or IP 56 (others on request) |
| **Thermal Ratings** | Insulation Class H (180 °C); Temperature Rise Class F (155 °C) |
| **Ambient Range** | -20 °C ... +55 °C |
| **Marine Certification** | DNV, ABS, BV, LR, RINA (others on request) |
| **Bearings** | Roller bearing; Sleeve bearing on request |
| **Lubrication** | Grease or oil lubrication |

## Additional features and options

- Space heater
- Leakage sensor
- Temperature monitoring
  - 6x PT100 winding sensors
  - 2x PT100 sensors per bearing
  - 2x PT100 sensors water inlet/outlet
- Electrically insulated bearing on NDE
- Resolver or Encoder
- Cable entry direction according to customer request
- Type of cable entry (cable glands or Roxtec seal)
- Dual winding system
- Shaft grounding
- Hollow shaft design
- Brake
- Machine components for integration



# One VEM, Two options

## VEMoPM OEM

- Delivery times - up to 25 weeks
- Application in marine and industry
- Standardized design according following pages
- Voltage up to 1,000V
- Random and form wound winding

## VEMoPM plus

- Special installation conditions
- Specific performance data
- Custom interfaces
- Voltage up to 6,600V
- Form wound winding

## Applications

### VEMoPM plus

- Shaft height: 710
- In use as the main propulsion motor on a multi-purpose vessel of the German Coastguard
- 4,500 kW
- 690 rpm
- 675 V



### VEMoPM plus

- Shaft height: 710
- In use as water-jet propulsion for a high speed ferry
- 2,200 kW
- 480 rpm
- 600 V

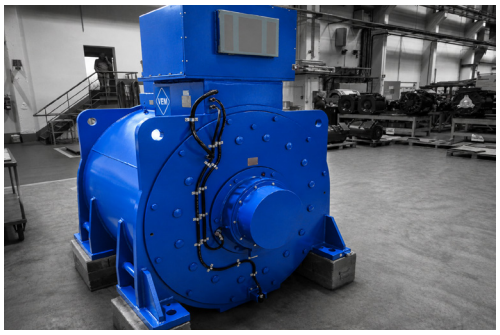

### VEMoPM OEM

- Shaft height: 315
- In use as propulsion motor of a river cruise vessel
- 370 kW
- 1,300 rpm
- 690 V



### VEMoPM OEM

- Shaft height: 450
- In use as propulsion motor for a LNG bunkering vessel
- 1,350 kW
- 880 rpm
- 690 V



# VEMoPM OEM Size 180

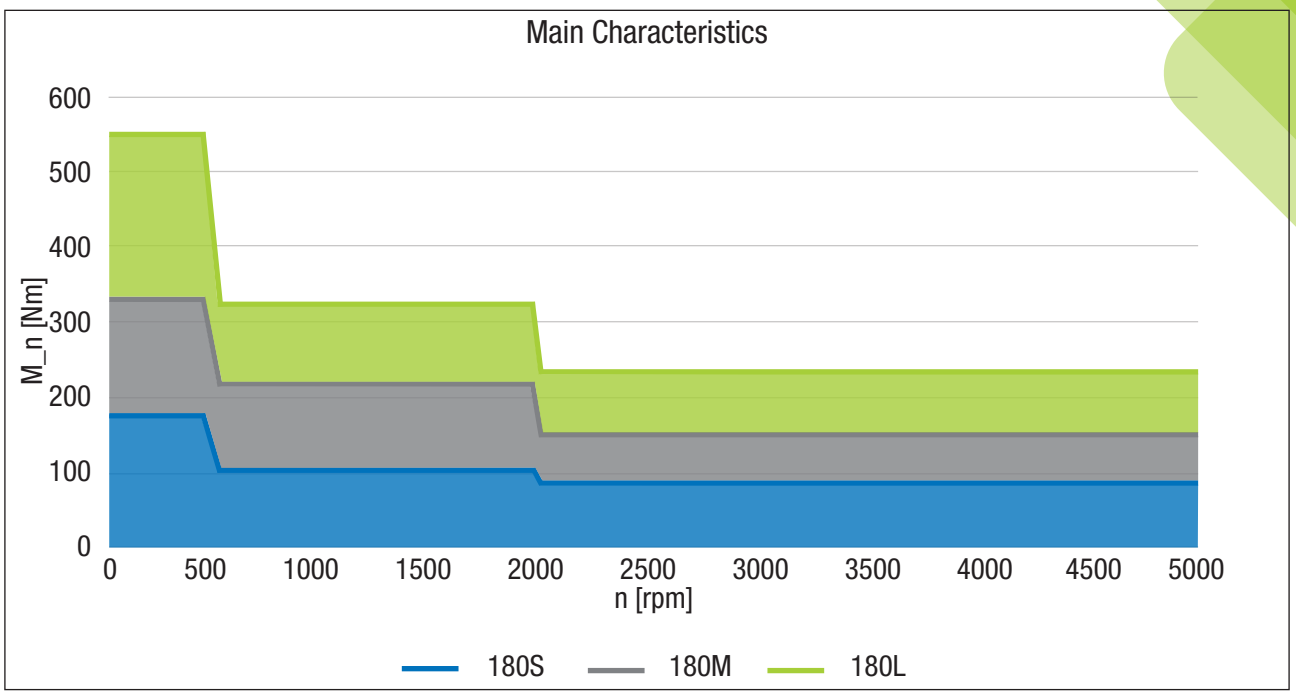


| | | Slow Speed | | | Medium Speed | | | High Speed | | |
|---|---|---|---|---|---|---|---|---|---|---|
| | | 180S | 180M | 180L | 180S | 180M | 180L | 180S | 180M | 180L |
| Number of poles | | 16 | 16 | 16 | 8 | 8 | 8 | 4 | 4 | 4 |
| Rated torque | Nm | 170 | 350 | 530 | 110 | 220 | 330 | 80 | 150 | 230 |
| Speed | rpm | 0 - 500 | 0 - 500 | 0 - 500 | 500 - 2,000 | 500 - 2,000 | 500 - 2,000 | 2,000 - 5,000 | 2,000 - 5,000 | 2,000 - 5,000 |
| Nominal efficiency | | 94% | 94% | 94% | 97% | 97% | 97% | 97.5% | 97.5% | 97.5% |
| Weight | kg | 90 | 150 | 210 | 90 | 150 | 210 | 90 | 150 | 210 |

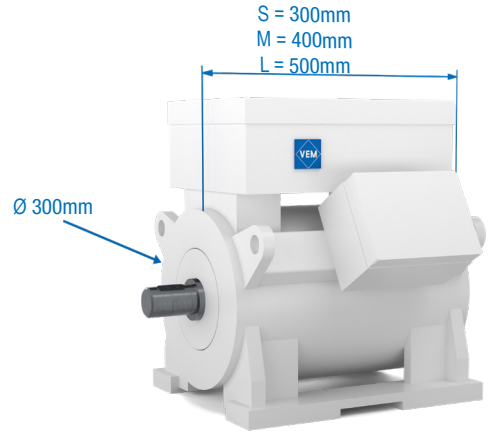


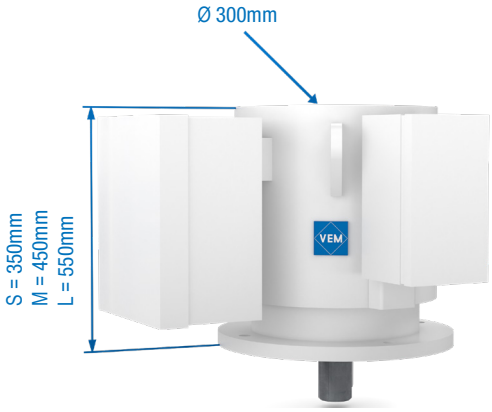


* Other shaft height available on request

## VEMoPM OEM Size 225

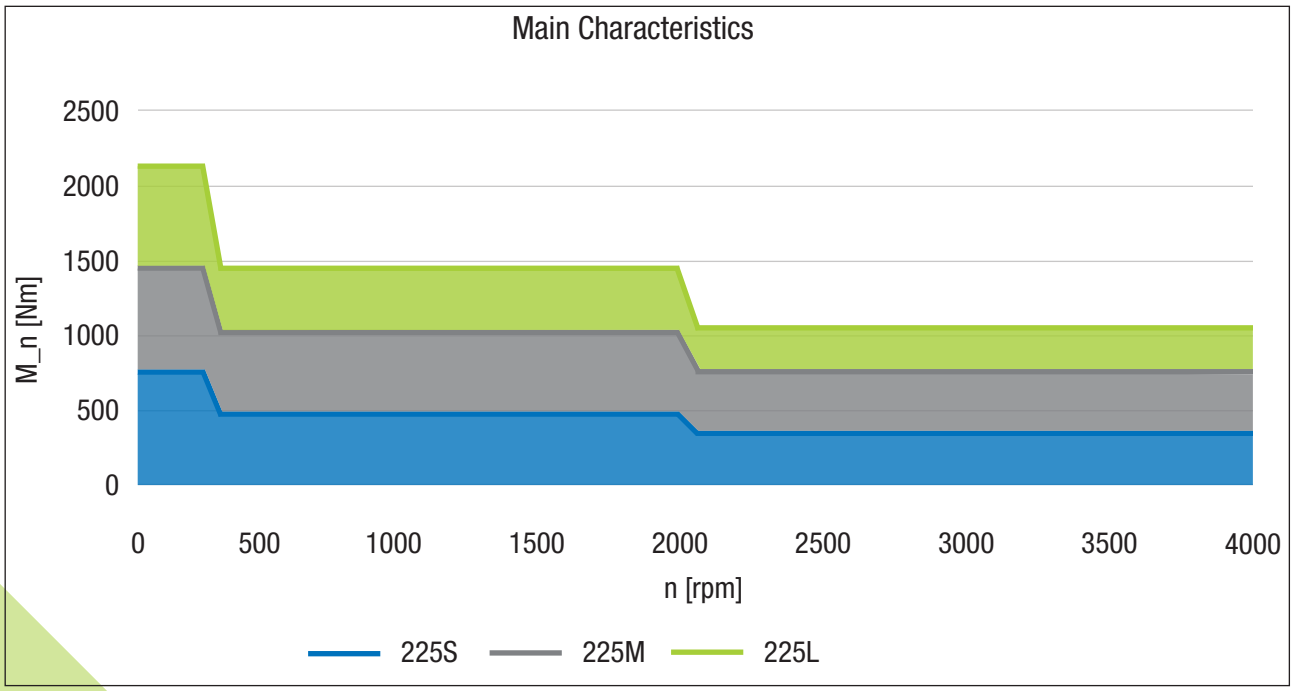


| | | Slow Speed | | | Medium Speed | | | High Speed | | |
|---|---|---|---|---|---|---|---|---|---|---|
| | | 225S | 225M | 225L | 225S | 225M | 225L | 225S | 225M | 225L |
| Number of poles | | 16 | 16 | 16 | 8 | 8 | 8 | 4 | 4 | 4 |
| Rated torque | Nm | 720 | 1,450 | 2,150 | 480 | 1,020 | 1,430 | 360 | 720 | 1,075 |
| Speed | rpm | 0 - 250 | 0 - 250 | 0 - 250 | 250 - 2,000 | 250 - 2,000 | 250 - 2,000 | 2,000 - 4,000 | 2,000 - 4,000 | 2,000 - 4,000 |
| Nominal efficiency | | 94% | 94% | 94% | 97.5% | 97.5% | 97.5% | 98% | 98% | 98% |
| Weight | kg | 250 | 350 | 450 | 250 | 350 | 450 | 250 | 350 | 450 |

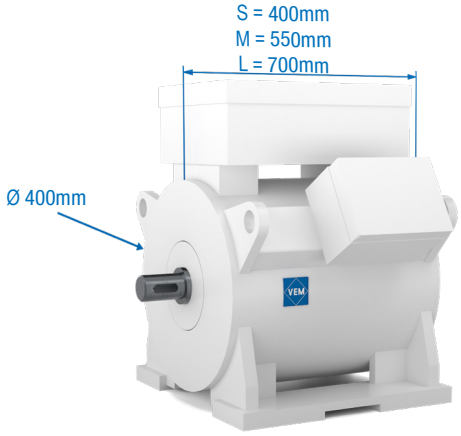


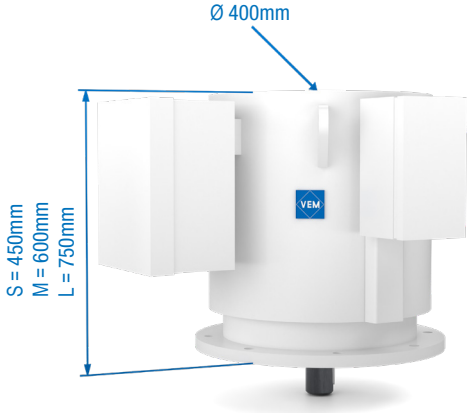


* Other shaft height available on request

## VEMoPM OEM Size 315

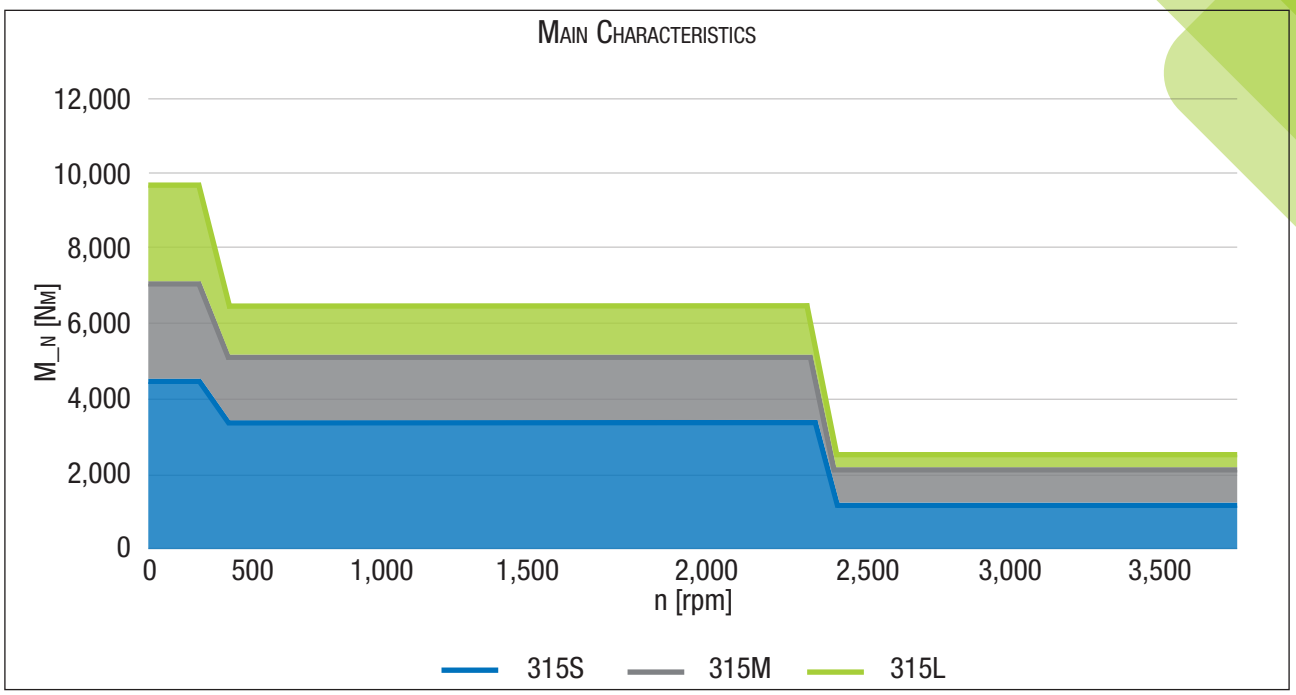


| | | Slow Speed | | | Medium Speed | | | High Speed | | |
|---|---|---|---|---|---|---|---|---|---|---|
| | | 315S | 315M | 315L | 315S | 315M | 315L | 315S | 315M | 315L |
| Number of poles | | 20 | 20 | 20 | 10 | 10 | 10 | 6 | 6 | 6 |
| Rated torque | Nm | 4,755 | 7,070 | 9,550 | 3,380 | 5,170 | 6,800 | 1,360 | 2,180 | 2,730 |
| Speed | rpm | 0 - 250 | 0 - 250 | 0 - 250 | 250 - 2,400 | 250 - 2,400 | 250 - 2,400 | 2,400 - 3,500 | 2,400 - 3,500 | 2,400 - 3,500 |
| Nominal efficiency | | 94% | 94% | 94% | 98% | 98% | 98% | 98% | 98% | 98% |
| Weight | kg | 1,100 | 1,500 | 1,900 | 1,100 | 1,500 | 1,900 | 1,100 | 1,500 | 1,900 |

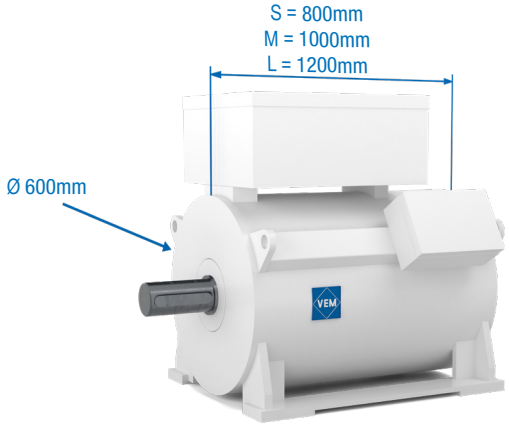


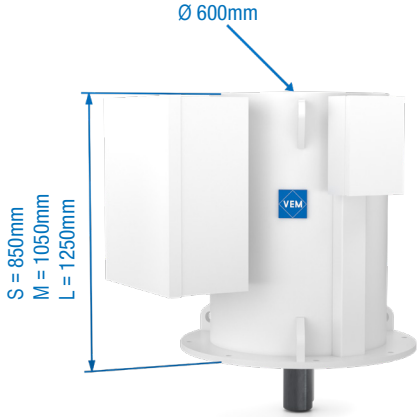


* Other shaft height available on request

## VEMoPM OEM Size 450

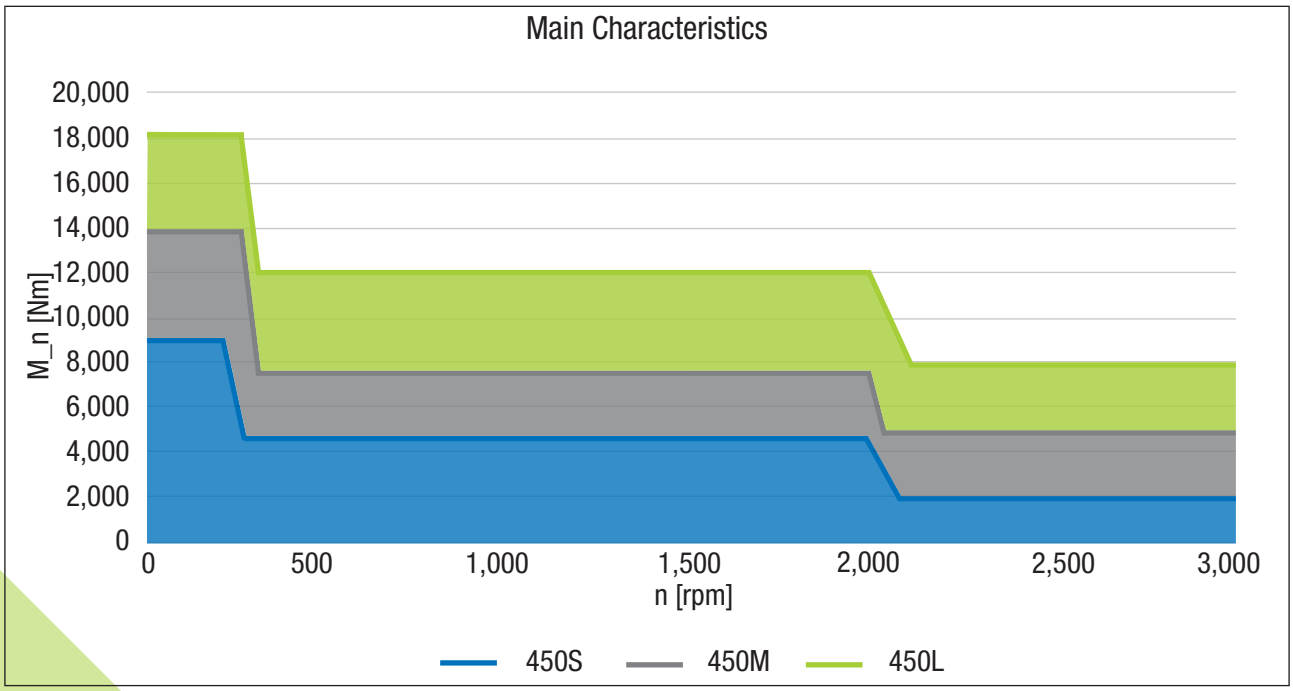


| | | Slow Speed | | | Medium Speed | | | High Speed | | |
|---|---|---|---|---|---|---|---|---|---|---|
| | | 450S | 450M | 450L | 450S | 450M | 450L | 450S | 450M | 450L |
| Number of poles | | 24 | 24 | 24 | 12 | 12 | 12 | 6 | 6 | 6 |
| Rated torque | Nm | 9,170 | 13,750 | 18,340 | 4,775 | 7,160 | 11,940 | 3,180 | 4,775 | 7,960 |
| Speed | rpm | 0 - 200 | 0 - 250 | 0 - 250 | 250 - 2,000 | 250 - 2,000 | 250 - 2,000 | 2,000 - 3,000 | 2,000 - 3,000 | 2,000 - 3,000 |
| Nominal efficiency | | 95% | 95% | 95% | 98.5% | 98.5% | 98.5% | 98.5% | 98.5% | 98.5% |
| Weight | kg | 2,200 | 3,000 | 4,500 | 2,200 | 3,000 | 4,500 | 2,200 | 3,000 | 4,500 |

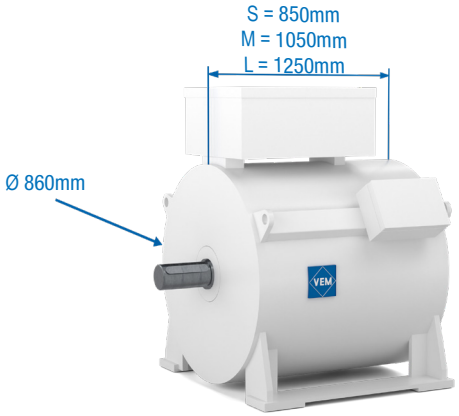


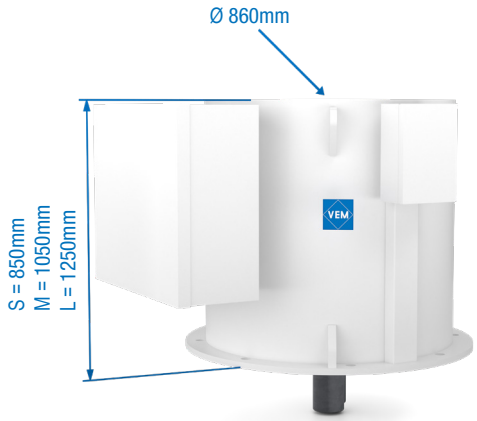




* Other shaft height available on request

## VEMoPM OEM Size 630

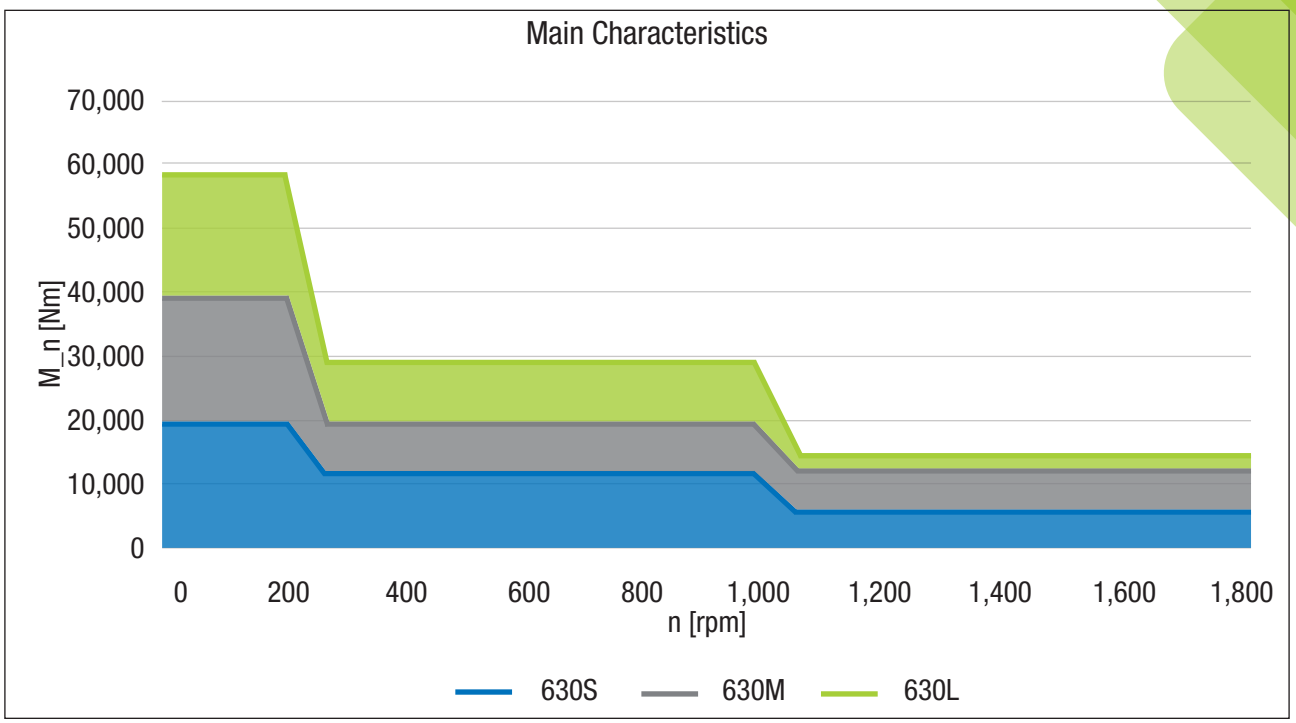


| | | Slow Speed | | | Medium Speed | | | High Speed | | |
|---|---|---|---|---|---|---|---|---|---|---|
| | | 630S | 630M | 630L | 630S | 630M | 630L | 630S | 630M | 630L |
| Number of poles | | 36 | 36 | 36 | 18 | 18 | 18 | 10 | 10 | 10 |
| Rated torque | Nm | 19,100 | 38,200 | 57,300 | 13,370 | 19,100 | 28,650 | 5,300 | 10,600 | 13,260 |
| Speed | rpm | 0 - 200 | 0 - 200 | 0 - 200 | 200 - 1,000 | 200 - 1,000 | 200 - 1,000 | 1,000 - 1,800 | 1,000 - 1,800 | 1,000 - 1,800 |
| Nominal efficiency | | 97% | 97% | 97% | 98.5% | 98.5% | 98.5% | 98.5% | 98.5% | 98.5% |
| Weight | kg | 3,500 | 4,500 | 6,000 | 3,500 | 4,500 | 6,000 | 3,500 | 4,500 | 6,000 |

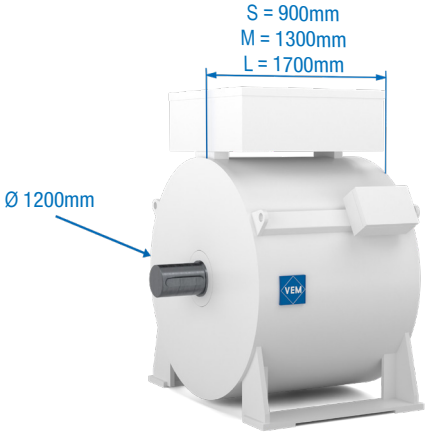


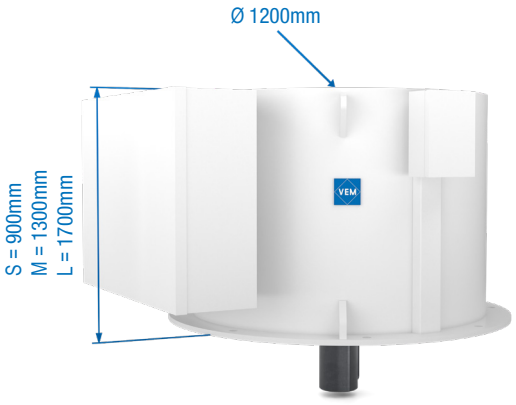


* Other shaft height available on request

## VEMoPM OEM Size 800

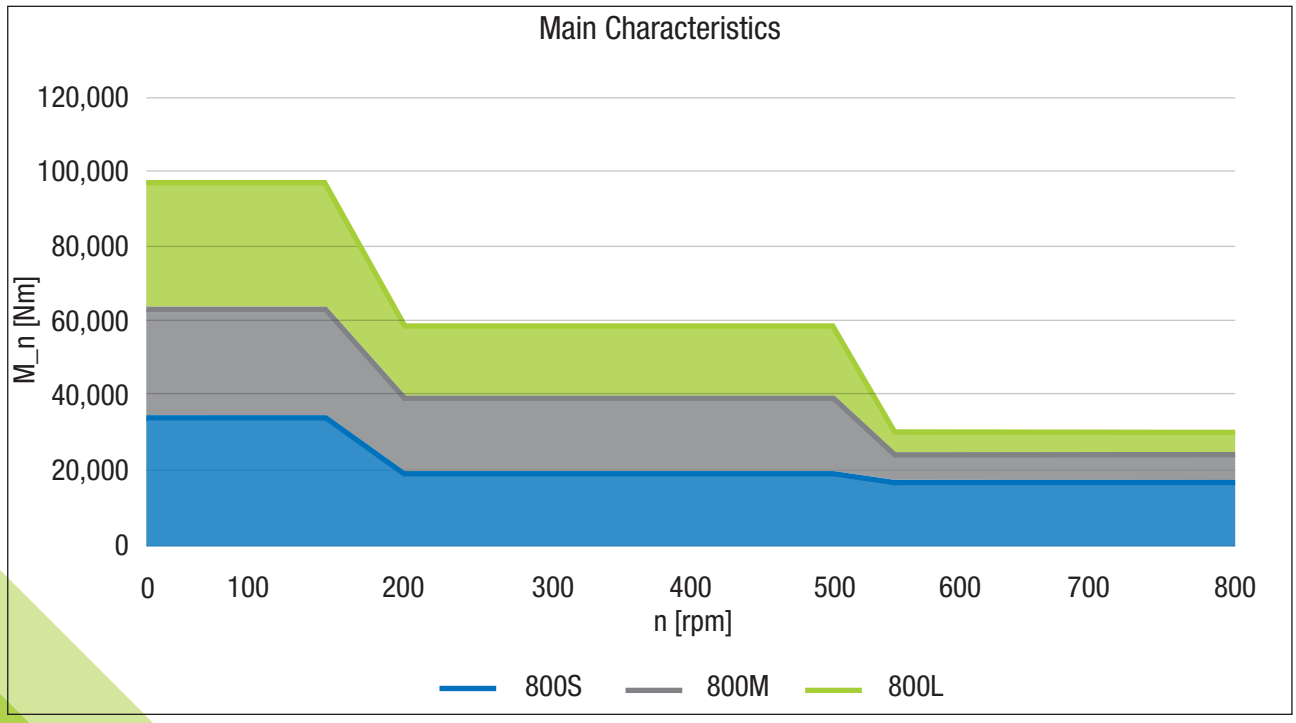


| | | Slow Speed | | | Medium Speed | | | High Speed | | |
|---|---|---|---|---|---|---|---|---|---|---|
| | | 800S | 800M | 800L | 800S | 800M | 800L | 800S | 800M | 800L |
| Number of poles | | 48 | 48 | 48 | 24 | 24 | 24 | 16 | 16 | 16 |
| Rated torque | Nm | 31,830 | 63,670 | 95,500 | 19,100 | 38,200 | 57,300 | 17,900 | 23,875 | 29,840 |
| Speed | rpm | 0 - 150 | 0 - 150 | 0 - 150 | 200 - 500 | 200 - 500 | 200 - 500 | 500 - 800 | 500 - 800 | 500 - 800 |
| Nominal efficiency | | 97% | 97% | 97% | 98% | 98% | 98% | 98% | 98% | 98% |
| Weight | kg | 4,500 | 6,500 | 8,500 | 4,500 | 6,500 | 8,500 | 4,500 | 6,500 | 8,500 |

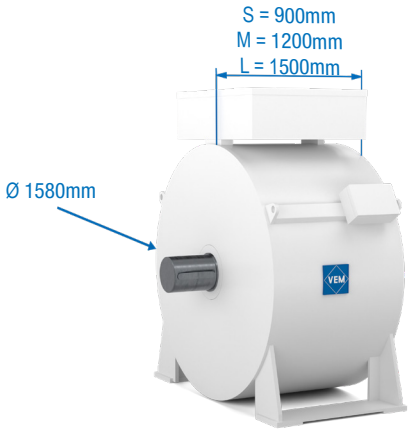


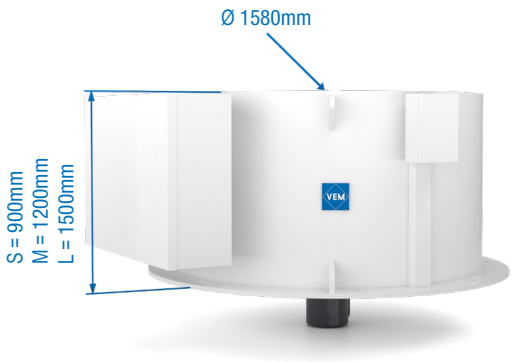




* Other shaft height available on request

## VEMoPM plus / All Sizes

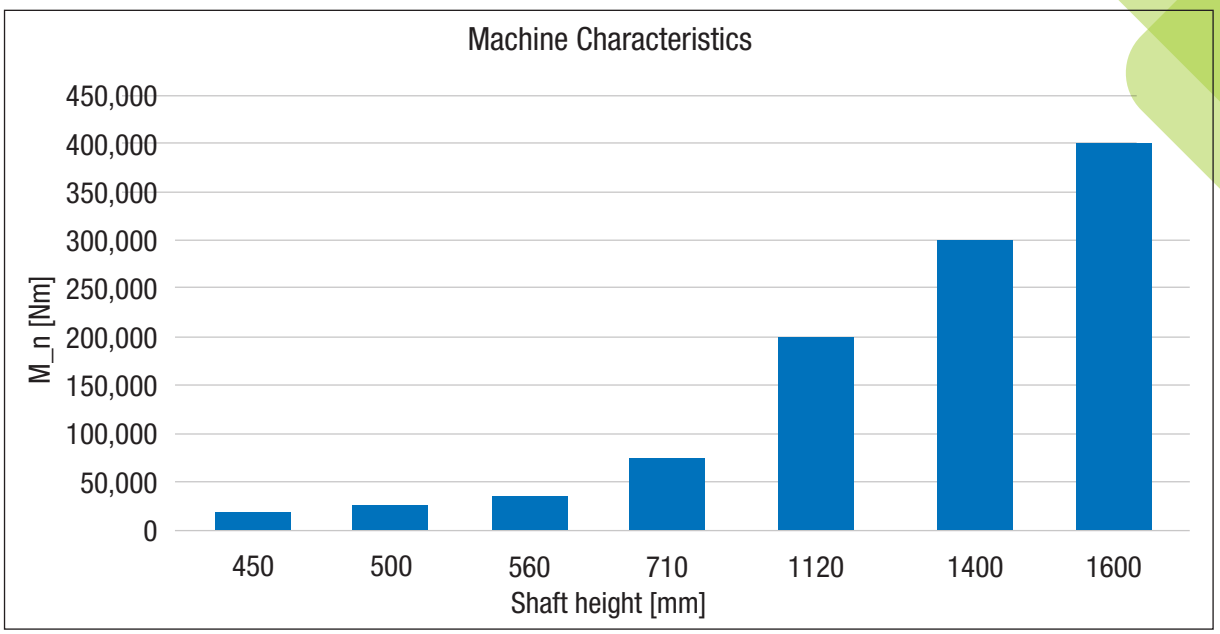


| Shaft height | mm | 450 | 500 | 560 | 710 | 1120 | 1400 | 1600 |
|---|---|---|---|---|---|---|---|---|
| Number of poles | | 6 | 6 | 8 | 12 & 16 | 16 | 16 | 16 |
| Rated torque | Nm | 20,000 | 25,000 | 30,000 | 75,000 | 200,000 | 300,000 | 400,000 |
| Speed | rpm | 0 - 1,800 | 0 - 1,800 | 0 - 1,400 | 0 - 900 | 0 - 220 | 0 - 200 | 0 - 200 |
| Nominal efficiency | | 98% | 98% | 98% | 98% | 97% | 97% | 97% |

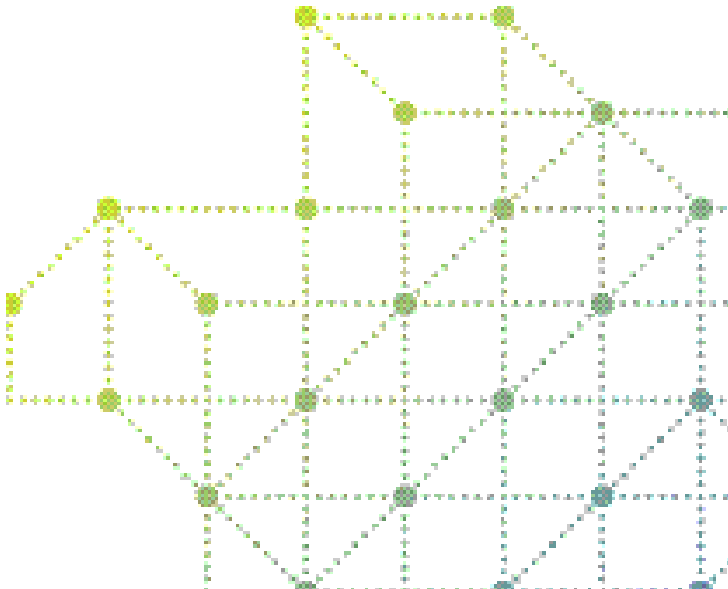

**VEM service**

**Technical services** | **Field services** | **Spare parts supply**




24/7

# Our Service – Good reasons for VEM

With the delivery of your drive system, we support you throughout all phases of your plant's operation with comprehensive service solutions.
We provide tailored services such as maintenance, inspection, repair, condition diagnostics, vibration analysis, and test bench services.
In addition, we offer professional installation, commissioning, training, as well as reliable spare parts supply, including inventory concepts.
In this way, we minimize downtime, increase system availability, and ensure the long-term performance of your drives.

**VEM service**
+49 351 208 3237
service@vem-group.com

# Notes:

VEM – specialist for drive solutions in the following branches:

- Air Separation
- Chemical, Oil & Petrochemicals
- Food & Beverage
- Marine Solutions
- Material Handling
- Metals
- Mining & Minerals
- Power Generation
- Pulp & Paper
- Test Bench
- Public Transportation & Rolling Stock
- Water & Waste Water

There are currently around 300 million electric machines bearing the VEM badge in use around the world. They are found aboard ships, in trains and trams, and in chemical plants and rolling mills. VEM generators produce electricity as hydropower and wind turbines. The VEM product range embraces variable-speed electric drive systems, special motors and special machines for outputs ranging from 0.06 kW to 100 MW/ 300 MVA, as well as a diversity of drive technology and power generation components.

All further applications you will find online:
**www.vem-group.com**

ELECTRIC DRIVES

FOR EVERY DEMAND

## Contacts


### VEMoPM OEM

**Maarten de Beun**

+49 151 121 89 655
maarten.debeun@vem-group.com

### VEMoPM plus

**Michael Handrick**

+49 151 628 45 952
michael.handrick@vem-group.com

**VEM GmbH**
Pirnaer Landstraße 176
01257 Dresden