BA00141D/06/EN/14.24-00
71681201
2024-11-15

valid as of version
V 3.06.00 (Device software)

Operating Instructions
Cubemass DCI
Modbus RS485

Coriolis flowmeter

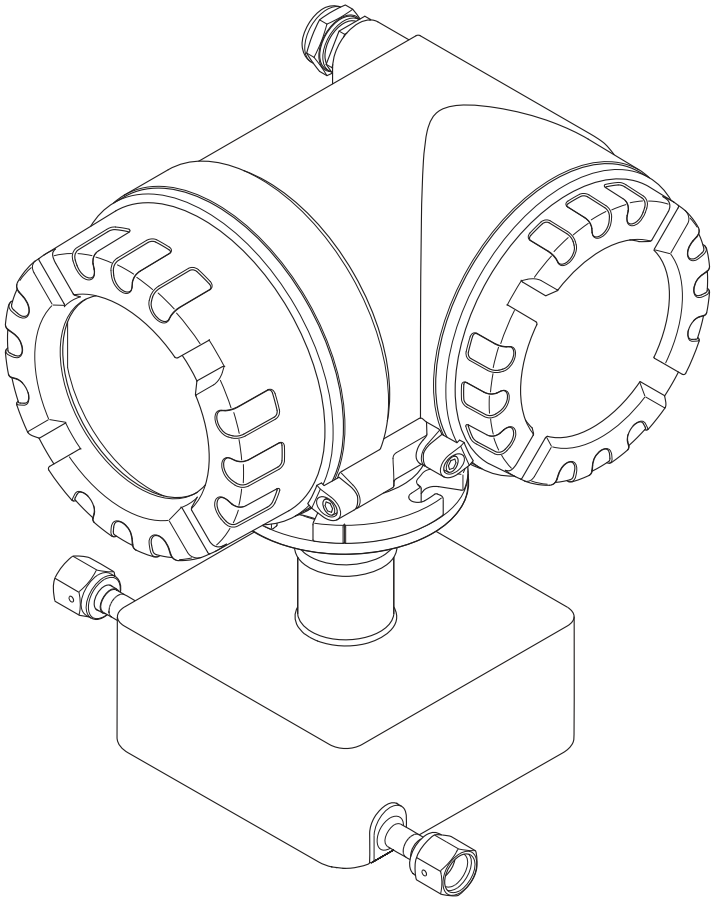

Endress+Hauser
People for Process Automation

Endress+Hauser

People for Process Automation

Table of contents

1 Safety instructions 4
1.1 Designated use 4
1.2 Installation, commissioning and operation 4
1.3 Operational safety 4
1.4 Return 5
1.5 Notes on safety conventions and icons 5
1.6 Symbols on nameplates 5

2 Identification 6
2.1 Device designation 6
2.2 Certificates and approvals 8
2.3 Registered trademarks 9

3 Incoming acceptance, transport and storage 10
3.1 Incoming acceptance 10
3.2 Transport 10
3.3 Storage 10

4 Installation 11
4.1 Installation conditions 11
4.2 Installation instructions 15
4.3 Post-installation check 18

5 Wiring 19
5.1 Modbus RS485 cable specifications 19
5.2 Connecting the remote version 20
5.3 Connecting the measuring unit 21
5.4 Degree of protection 23
5.5 Post-connection check 24

6 Operation 25
6.1 Display and operating elements 25
6.2 Brief guide to the function matrix 28
6.3 Error messages 30
6.4 Modbus RS485 communication 32
6.5 Operating options 42
6.6 Switching hardware write protection on/off . . . 43

7 Commissioning 44
7.1 Function check 44
7.2 Switching on the measuring device 44
7.3 Quick Setup 45
7.4 Configuration 53
7.5 Adjustment 58
7.6 Purge and pressure monitoring connections . . . 61
7.7 Memory (HistoROM) 61

8 Maintenance 62
8.1 External cleaning 62

9 Accessories 63
9.1 Device-specific accessories 63
9.2 Service-specific accessories 63
9.3 System components 64

10 Troubleshooting 65
10.1 Troubleshooting instructions 65
10.2 System error messages 66
10.3 Process error messages 71
10.4 Process errors without messages 72
10.5 Response of outputs to errors 73
10.6 Spare parts 74
10.7 Return 80
10.8 Disposal 80
10.9 Software history 80

11 Technical data 81
11.1 Applications 81
11.2 Function and system design 81
11.3 Input 81
11.4 Output 81
11.5 Power supply 82
11.6 Performance characteristics 83
11.7 Installation 86
11.8 Environment 86
11.9 Process 87
11.10 Mechanical construction 88
11.11 Operability 89
11.12 Certificates and approvals 90
11.13 Accessories/spare parts 90
11.14 Documentation 91

Index 92

1 Safety instructions

1.1 Designated use

The measuring device described in these operating instructions may only be used for measuring the mass flow of liquids and gases. At the same time, the system also measures fluid density and fluid temperature. These parameters are then used to calculate other variables such as volume flow. Fluids with widely differing properties can be measured. Resulting from incorrect use or from use other than that designated the operational safety of the measuring devices can be suspended. The manufacturer accepts no liability for damages being produced from this.

1.2 Installation, commissioning and operation

Note the following points:
- Installation, connection to the electricity supply, commissioning and maintenance of the measuring device must be carried out by trained, qualified specialists authorized to perform such work by the facility's owner-operator. The specialist must have read and understood these Operating Instructions and must follow the instructions they contain.
- The device must be operated by persons authorized and trained by the facility's owner-operator. Strict compliance with the instructions in the Operating Instructions is mandatory.
- Endress+Hauser will be happy to assist in clarifying the corrosion resistance properties of materials wetted by special fluids, including fluids used for cleaning. However, small changes of temperature, concentration or degree of contamination in the process can result in differences in corrosion resistance. Therefore, Endress+Hauser provides no warranty and assumes no liability with regard to corrosion resistance of fluid wetted materials in an application. The user is responsible for choosing suitable fluid wetted materials in the process.
- If welding work is performed on the piping system, do not ground the welding appliance via the measuring device.
- The installer must ensure that the measuring system is correctly wired in accordance with the wiring diagrams. The transmitter must be grounded, except in cases where special protective measures have been taken, e.g. galvanically isolated power supply SELV or PELV! (SELV = Safety Extra Low Voltage; PELV = Protective Extra Low Voltage).
- Invariably, local regulations governing the maintenance and repair of electrical devices apply.

1.3 Operational safety

Note the following points:
- Measuring systems for use in hazardous environments are accompanied by separate "Ex documentation", which is an integral part of these Operating Instructions. Strict compliance with the installation instructions and ratings as stated in this supplementary documentation is mandatory. The symbol on the front of this supplementary Ex documentation indicates the approval and the inspection body (Ⓔx Europe, NEC/CEC[1)], NEPSI).
- The measuring device complies with the general safety requirements in accordance with EN 61010, the EMC requirements of IEC/EN 61326, and NAMUR recommendations NE 21, 43 and 53.
- Depending on the version, the housing of the sensor can be equipped with a rupture disk to prevent the pressure in the sensor housing from increasing in the event of an error. As long as the adhesive label (→ 7) is intact, the rupture disk is also intact.

1) NEC (National Electrical Code) / CEC (Canadian Electrical Code)

- For measuring systems used in SIL 2 applications, the separate manual on functional safety (SD00077D/06) must be observed.
- The manufacturer reserves the right to modify technical data without prior notice. Your Endress+Hauser representative will supply you with current information and any updates to these Operating Instructions.
- Danger - hot surfaces. Hot fluids passing through the measuring tube increase the surface temperature of the sensor housing. Temperatures close to the fluid temperature must be expected. If fluid temperatures are high, take suitable measures to protect against scalding from the hot surfaces.

1.4 Return

- Do not return a measuring device if you are not absolutely certain that all traces of hazardous substances have been removed, e.g. substances which have penetrated crevices or diffused through plastic.
- Costs incurred for waste disposal and injury (burns, etc.) due to inadequate cleaning will be charged to the owner-operator.
- Please note the measures on → 80

1.5 Notes on safety conventions and icons

The devices are designed to meet state-of-the-art safety requirements, have been tested, and left the factory in a condition in which they are safe to operate. The devices comply with the applicable standards and regulations in accordance with EN 61010 "Safety requirements for electrical equipment for measurement, control and laboratory use". They can, however, be a source of danger if used incorrectly or for other than the designated use. Consequently, always pay particular attention to the safety instructions indicated in these Operating Instructions by the following icons:



Warning!
"Warning" indicates an action or procedure which, if not performed correctly, can result in injury or a safety hazard. Comply strictly with the instructions and proceed with care.



Caution!
"Caution" indicates an action or procedure which, if not performed correctly, can result in incorrect operation or destruction of the measuring device. Comply strictly with the instructions.



Note!
"Note" indicates an action or procedure which, if not performed correctly, can have an indirect effect on operation or trigger an unexpected response on the part of the device.

1.6 Symbols on nameplates

The following symbol appears on nameplates (refer to the corresponding documentation):

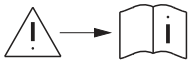

In the case of devices for potentially explosive atmospheres, a documentation code appears, representing supplementary Ex documentation that it is mandatory to read.

2 Identification

The following options are available for identification of the measuring device:
- Nameplate specifications.
- Order code with breakdown of the device features on the delivery note.
- Enter serial numbers from nameplates in *W@M Device Viewer* (www.endress.com/deviceviewer): All information about the measuring device is displayed.

For an overview of the scope of the Technical Documentation provided, refer to the following:
- The chapters "Documentation" → 🖹 91.
- The *W@M Device Viewer*: Enter the serial number from the nameplate (www.endress.com/deviceviewer).

Reorder
The measuring device is reordered using the order code.

Extended order code:
- The device type (product root) and basic specifications (mandatory features) are always listed.
- Of the optional specifications (optional features), only the safety and approval-related specifications are listed (e.g. LA). If other optional specifications are also ordered, these are indicated collectively using the # placeholder symbol (e.g. #LA#).
- If the ordered optional specifications do not include any safety and approval-related specifications, they are indicated by the + placeholder symbol (e.g. 8DF**-AACCCAAD2S1+).

2.1 Device designation

The "Cubemass DCI" flow measuring system consists of the following components:
- Transmitter
- Sensor

Two versions are available:
- Compact version: transmitter and sensor form a single mechanical unit.
- Remote version: transmitter and sensor are installed separately.

2.1.1 Nameplate of the transmitter

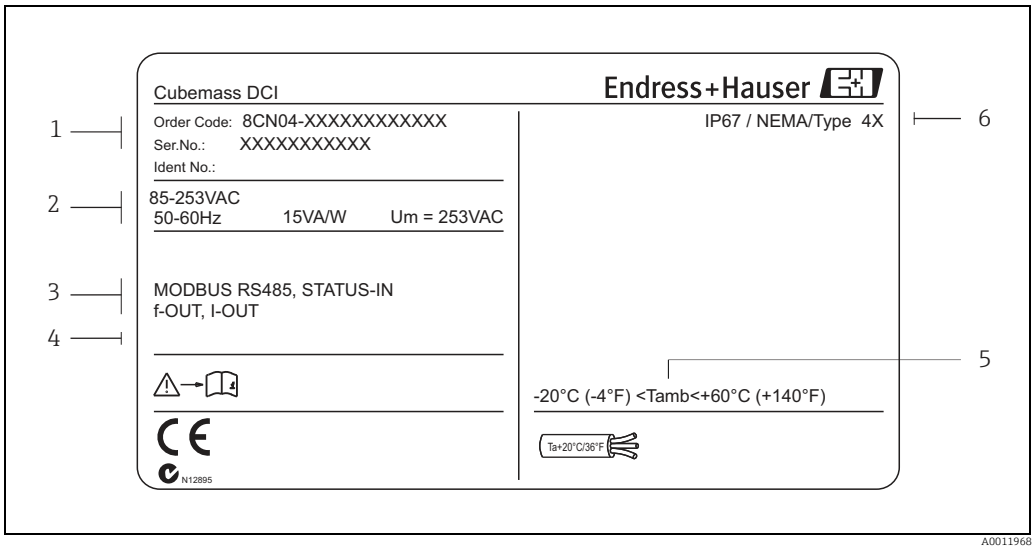

Fig. 1: Nameplate specifications for the transmitter (example)

1 *Order code/serial number: See the specifications on the order confirmation for the meanings of the individual letters and digits*
2 *Power supply/ frequency: 85 to 253 V AC/ 50 to 60 Hz*
Power consumption: 15 VA / 15 W
3 *Available inputs / outputs*
4 *Reserved for information on special products*
5 *Ambient temperature range*
6 *Degree of protection*

2.1.2 Nameplate of the sensor

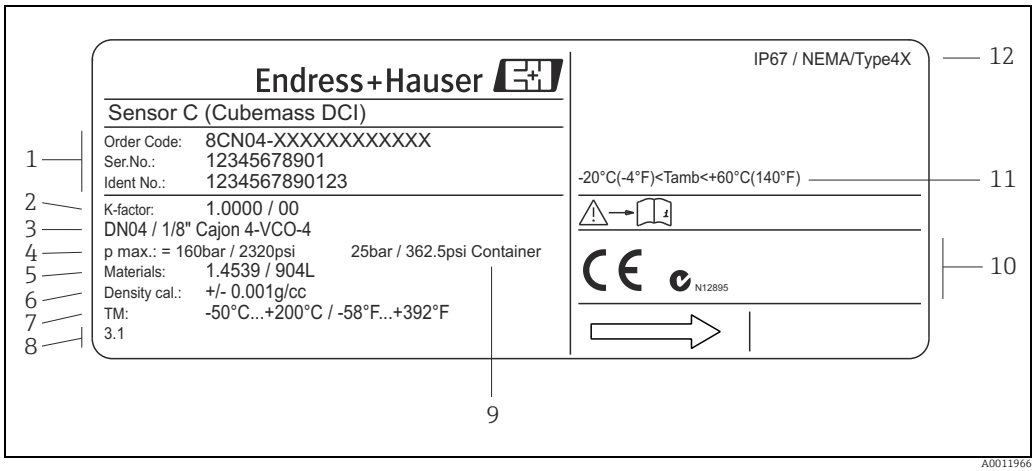

Fig. 2: Nameplate specifications for the sensor (example)

1 *Order code/serial number: See the specifications on the order confirmation for the meanings of the individual letters and digits*
2 *Calibration factor*
3 *Flange nominal diameter*
4 *Max. pressure*
5 *Material*
6 *Density*
7 *Fluid temperature range*
8 *Reserved for information on special products*
9 *Secondary containment pressure range*
10 *Reserved for additional information on device version (approvals, certificates)*
11 *Ambient temperature range*
12 *Degree of protection*

2.1.3 Nameplate for connections

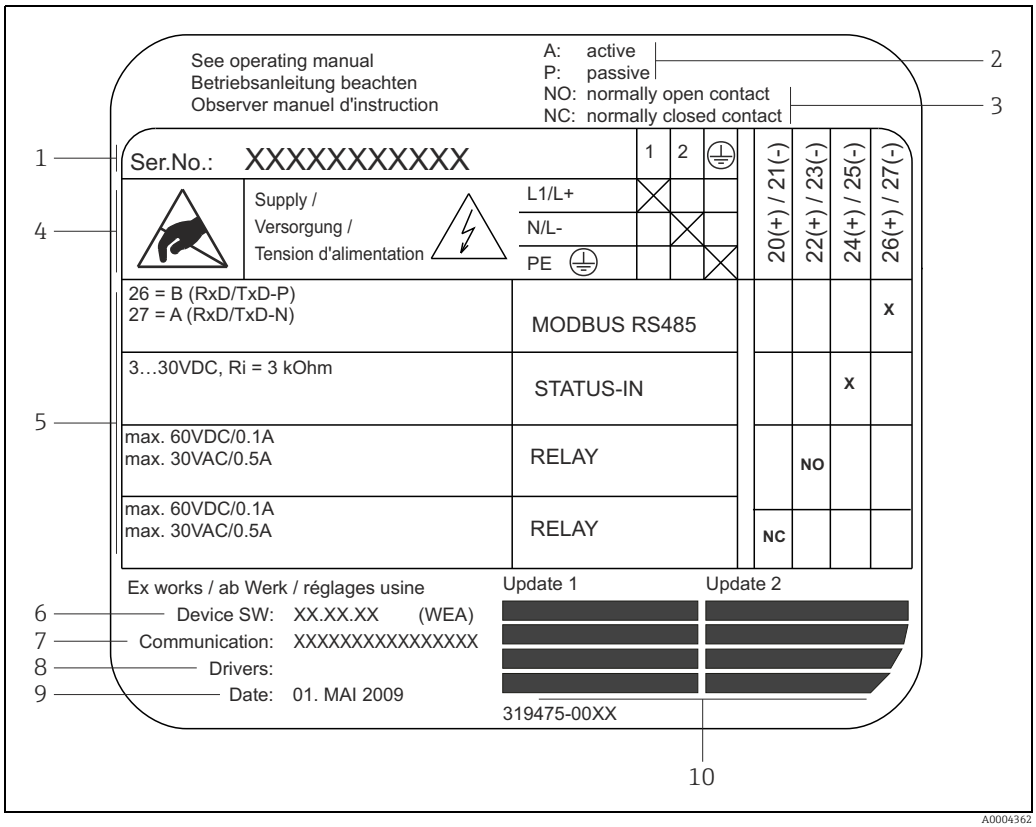

Fig. 3: Nameplate specifications for transmitter connections (example)

1 *Serial number*
2 *Possible configuration of current output*
3 *Possible configuration of relay contacts*
4 *Terminal assignment, cable for power supply: 85 to 253 V AC, 20 to 55 V AC, 16 to 62 V DC*
   – *Terminal **No. 1**: L1 for AC, L+ for DC*
   – *Terminal **No. 2**: N for AC, L- for DC*
5 *Signals present at inputs and outputs, possible configuration and terminal assignment (20 to 27), also "Electrical values of inputs/outputs"* → 🖹 *81*
6 *Version of device software currently installed (incl. language group)*
7 *Installed communication type*
8 *Information on current communication software (Device Revision and Device Description)*
9 *Date of installation*
10 *Current updates to data specified in points 6 to 9*

2.2 Certificates and approvals

The devices are designed in accordance with good engineering practice to meet state-of-the-art safety requirements, have been tested, and left the factory in a condition in which they are safe to operate.

The measuring devices comply with the applicable standards and regulations in accordance with EN 61010 -1, "Safety requirements for electrical equipment for measurement, control and laboratory use" and with the EMC requirements of IEC/EN 61326. The measuring system described in these Operating Instructions thus complies with the statutory requirements of the EC Directives. Endress+Hauser confirms successful testing of the device by affixing to it the CE mark.

The measuring system meets the EMC requirements of the Australian Communications and Media Authority (ACMA).

The measuring device meets all the requirements of the Modbus/TCP conformity and integration test and holds the "Modbus/TCP Conformance Test Policy, Version 2.0". The measuring device has successfully passed all the test procedures carried out and is certified by the "Modbus/TCP Conformance Test Laboratory" of the University of Michigan.

2.3 Registered trademarks

KALREZ® and VITON®
Registered trademarks of E.I. Du Pont de Nemours & Co., Wilmington, USA

Modbus®
Registered trademark of the SCHNEIDER AUTOMATION, INC.

Applicator®, FieldCare®, HistoROM™, S-DAT®, T-DAT®
Registered or registration-pending trademarks of the Endress+Hauser Group

3 Incoming acceptance, transport and storage

3.1 Incoming acceptance

On receipt of the goods, check the following points:
- Is the packaging or content damaged?
- Is anything missing from the shipment and does the scope of supply match your order?

3.2 Transport

Comply with the following instructions when unpacking the device and transporting it to its final location:
- Transport the devices in the containers in which they are delivered.
- The covers or caps fitted to the process connections prevent mechanical damage to the sealing faces and the ingress of foreign matter to the measuring tube during transportation and storage. Consequently, do not remove these covers or caps until immediately before installation.

3.3 Storage

Note the following points:
- Pack the measuring device in such a way as to protect it reliably against impact for storage (and transportation). The original packaging provides optimum protection.
- The permitted storage temperature is −40 to +80 °C (−40 to 176 °F), preferably +20 °C (+68 °F).
- Do not remove the protective caps on the process connections until you are ready to install the device.
- The measuring device must be protected against direct sunlight during storage in order to avoid unacceptably high surface temperatures.

4 Installation

4.1 Installation conditions

Note the following points:
- The measuring device is designed for mounting on tabletops, walls or pipes.
- The high oscillation frequency of the measuring tubes ensures that the correct operation of the measuring system is not influenced by pipe vibrations.
- No special precautions need to be taken for fittings which create turbulence (valves, elbows, T-pieces etc.) as long as no cavitation occurs.
- For mechanical reasons, and in order to protect the piping, it is advisable to support heavy sensors.

4.1.1 Dimensions

All the dimensions and lengths of the sensor and transmitter are provided in the separate documentation entitled "Technical Information" → 91.

4.1.2 Mounting location

The accumulation of air and the formation of gas bubbles in the measuring tube could result in an increase in measuring errors.
For this reason, **avoid** the following mounting locations in the pipe:
- The highest point of a pipeline. Risk of air accumulating.
- Directly upstream of a free pipe outlet in a down pipe.

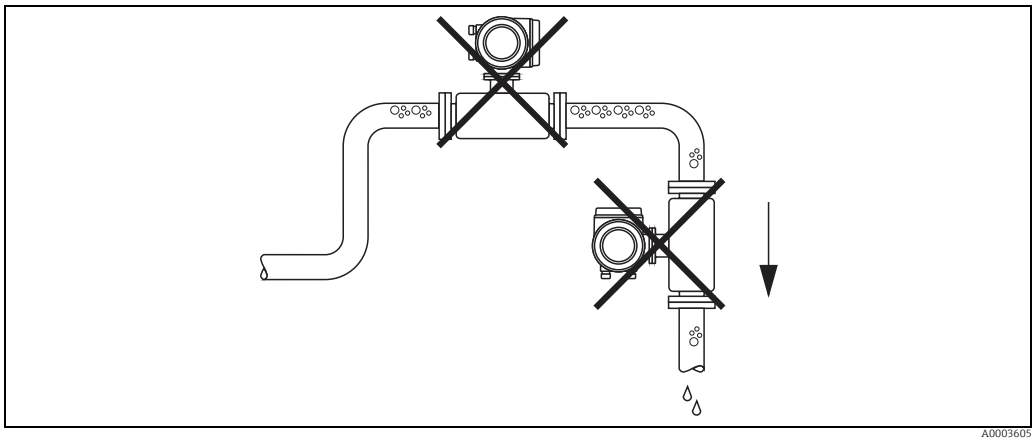

Fig. 4: Mounting location

The proposed configuration in the following diagram, however, permits installation in an open down pipe. Pipe restrictors or the use of an orifice plate with a smaller cross-section than the nominal diameter prevent the sensor from running empty during measurement.

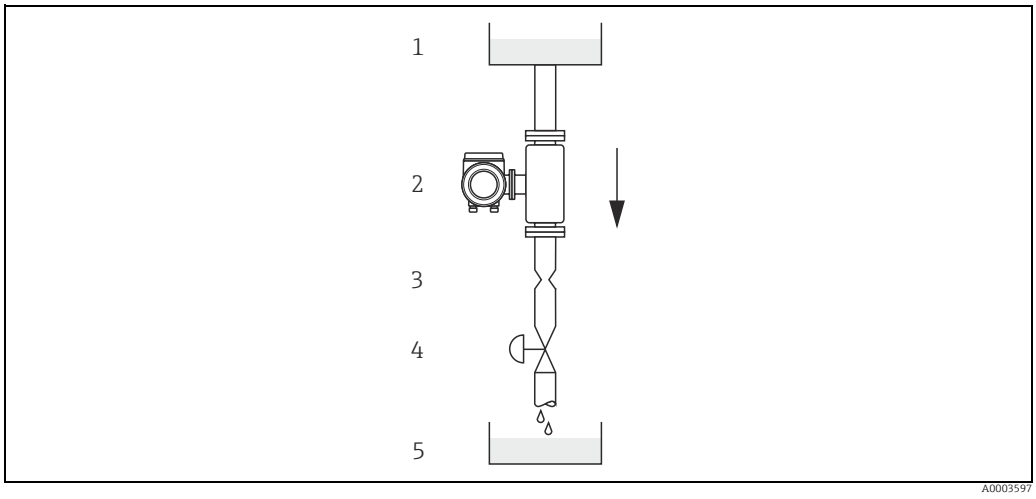

Fig. 5: Installation in a down pipe (e.g. for batching applications)

1 Supply tank
2 Sensor
3 Orifice plate, pipe restriction (see Table)
4 Valve
5 Batching tank

DN		Ø Orifice plate, pipe restriction	
mm	in	mm	in
1	1/24"	0.8	0.03
2	1/12"	1.5	0.06
4	1/8"	3.0	0.12
6	1/4"	5.0	0.20

System pressure

It is important to ensure that cavitation does not occur as it could influence the oscillation of the measuring tube. No special measures need to be taken for fluids which have properties similar to water under normal conditions. In the case of liquids with a low boiling point (hydrocarbons, solvents, liquefied gases) or in suction lines, it is important to ensure that pressure does not drop below the vapor pressure and that the liquid does not start to boil. It is also important to ensure that the gases that occur naturally in many liquids do not outgas. Such effects can be prevented when system pressure is sufficiently high.

Consequently, it is generally best to install the sensor:
- On the pump pressure side (no risk of vacuum)
- At the lowest point in a riser

4.1.3 Orientation

Make sure that the direction of the arrow on the nameplate of the sensor matches the direction of flow (direction in which the fluid flows through the pipe).

Vertical/horizontal:

When installed correctly, the transmitter housing is above or below the pipe. This arrangement means that no gas bubbles or solid deposits can accumulate in the curved measuring tube (single-tube system).

Do not install the sensor in such a way that it is suspended in the pipe without support or measures to secure it. This prevents excessive material strain at the process connection. The base plate of the sensor housing is designed for mounting on a tabletop, wall or post.

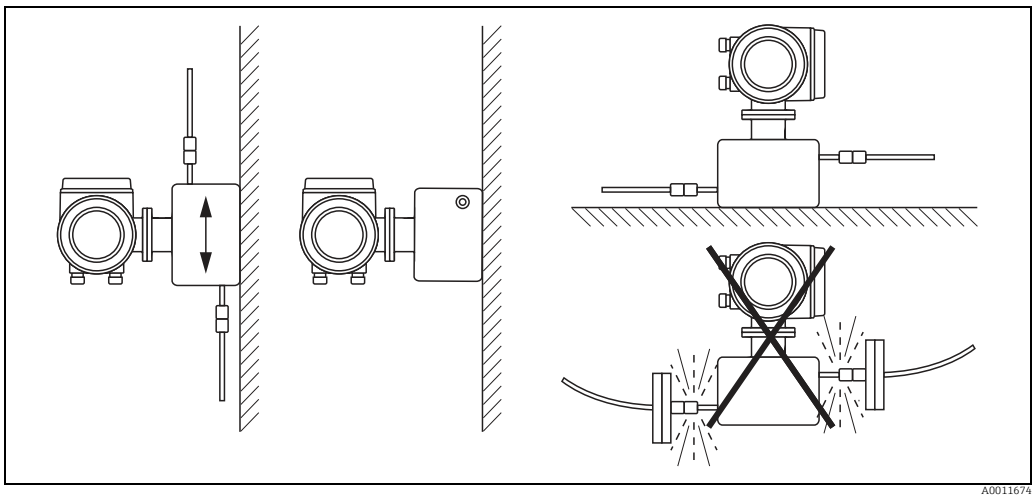

Fig. 6: Vertical and horizontal orientation

4.1.4 Heating

Some fluids require suitable measures to avoid loss of heat at the sensor. Heating can be electric, e.g. with heated elements, or by means of heating jackets or copper pipes conveying hot water or steam.

Caution!

- Danger of electronics overheating. Make sure that the maximum permissible ambient temperature for the transmitter is not exceeded.
  The adapter between the sensor and transmitter and the connection housing of the remote version must always remain free of insulating material.
- If using an electric trace heating system whose heating is regulated via phase control or pulse packages, there is the possibility that measured values could be influenced by magnetic fields which may occur (i.e. for values greater than those permitted by the EC standard (sine 30 A/m)). In such instances, it is necessary to magnetically shield the sensor.
  The secondary containment can be shielded with tin plate or electric sheets without privileged direction (e.g. V330-35A) with the following properties:
  – Relative magnetic permeability $\mu_r \geq 300$
  – Plate thickness d ≥ 0.35 mm (≥0.0011")
- For information on the permitted temperature ranges → 86. In the case of measuring devices that are used in hazardous areas, the trace heating system may not generate temperatures above the permitted fluid temperature per temperature class.

4.1.5 Inlet and outlet runs

There are no installation requirements regarding inlet and outlet runs. If possible, mount the sensor upstream of fittings such as valves, T-pieces, elbows etc.

4.1.6 Vibrations

The high oscillation frequency of the measuring tubes ensures that the correct operation of the measuring system is not influenced by pipe vibrations. Consequently, the sensors require no special measures for attachment.

4.1.7 Limiting flow

Limiting flow information can be found in the separate "Technical Information" document, → 91.

4.1.8 Special installation instructions

Rupture disk

Make sure that the function and operation of the rupture disk is not impeded through the installation of the device. The position of the rupture disk is indicated on a sticker beside it. For additional information that is relevant to the process (→ 88).

The existing connecting nozzles are not intended for the purpose of rinsing or pressure monitoring, but instead serve as the mounting location for the rupture disk.

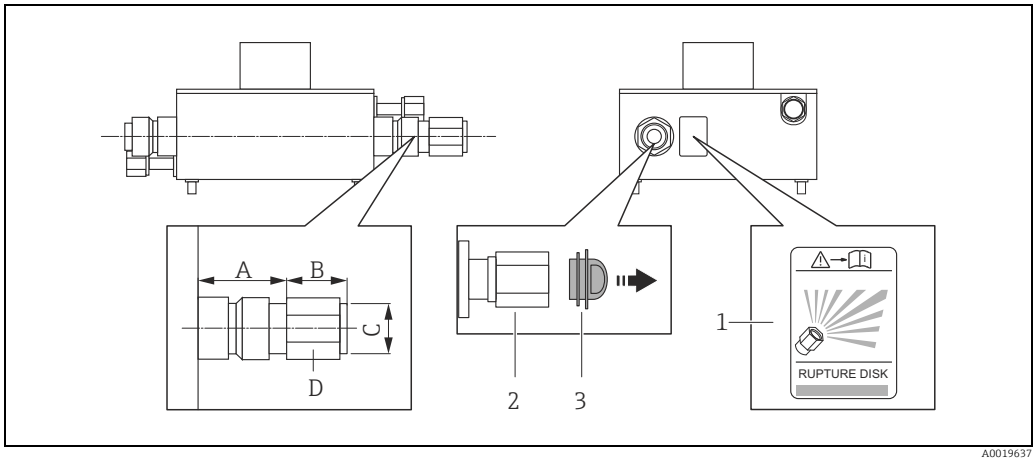

Abb. 7: Sensor housing with rupture disk for defined medium exit

1 Rupture disk label
2 Rupture disk with ½" NPT internal thread with 1" width across flat
3 Transport protection

Dimensions in SI units

DN	A	B	C	D
1 to 6	33	Approx. 42	½" NPT	AF 1"

All dimensions in [mm]

Dimensions in US units

DN	A	B	C	D
1/24 to ¼"	1.3	Approx. 1.65	½" NPT	AF 1"

All dimensions in [in]

Warning!
Limited functional reliability of the rupture disk.
Danger to persons from escaping fluids.
- Do not remove the rupture disk.
- When using a rupture disk, do not use a heating jacket.
- Make sure that the function and operation of the rupture disk is not impeded through the installation of the device.
- Take precautions to prevent damage and danger to persons if the rupture disk is actuated.
- Observe information on the rupture disk sticker.

4.2 Installation instructions

4.2.1 Turning the transmitter housing

Turning the aluminum field housing

Warning!
The turning mechanism in devices with EEx d/de or NEC/CEC Cl. I Div. 1 classification is not the same as that described here. The procedure for turning these housings is described in the Ex-specific documentation.

1. Loosen the two securing screws.
2. Turn the bayonet catch as far as it will go.
3. Carefully lift the transmitter housing as far as it will go.
4. Turn the transmitter housing to the desired position (max. 2 × 90° in either direction).
5. Lower the housing into position and reengage the bayonet catch.
6. Retighten the two securing screws.

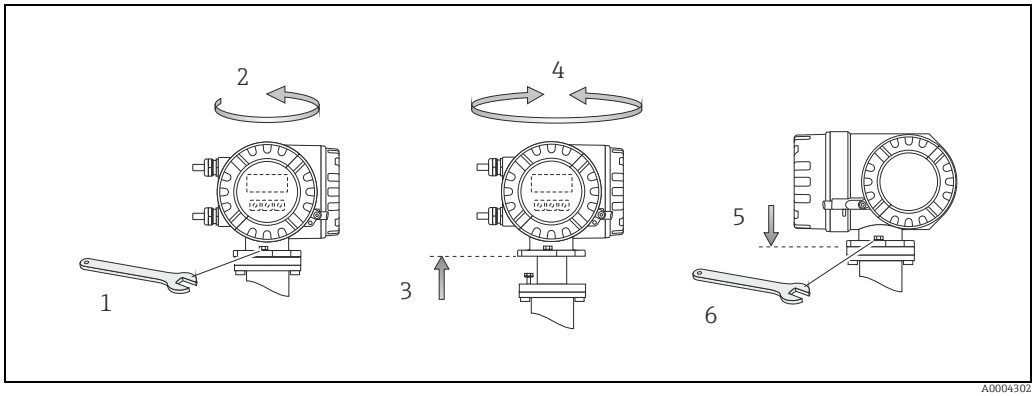

Fig. 8: Turning the transmitter housing (aluminum field housing)

4.2.2 Installing the wall-mount housing

There are various ways of installing the wall-mount housing:
- Mounted directly on the wall
- Installation in control panel (separate mounting set, accessories) → 17
- Pipe mounting (separate mounting set, accessories) → 17

Caution!
- At the mounting location, ensure that the permitted ambient temperature range (−20 to +60 °C (−4 to +140 °F), optional −40 to +60 °C (−40 to +140 °F)) is not exceeded. Install the device in a shady location. Avoid direct sunlight.
- Always install the wall-mount housing in such a way that the cable entries are pointing down.

Mounted directly on the wall

1. Drill the holes → 9.
2. Remove the cover of the connection compartment (a).
3. Push the two securing screws (b) through the appropriate bores (c) in the housing.
   – Securing screws (M6): max. Ø 6.5 mm (0.26")
   – Screw head: max. Ø 10.5 mm (0.41")
4. Secure the transmitter housing to the wall as indicated.
5. Screw the cover of the connection compartment (a) firmly onto the housing.

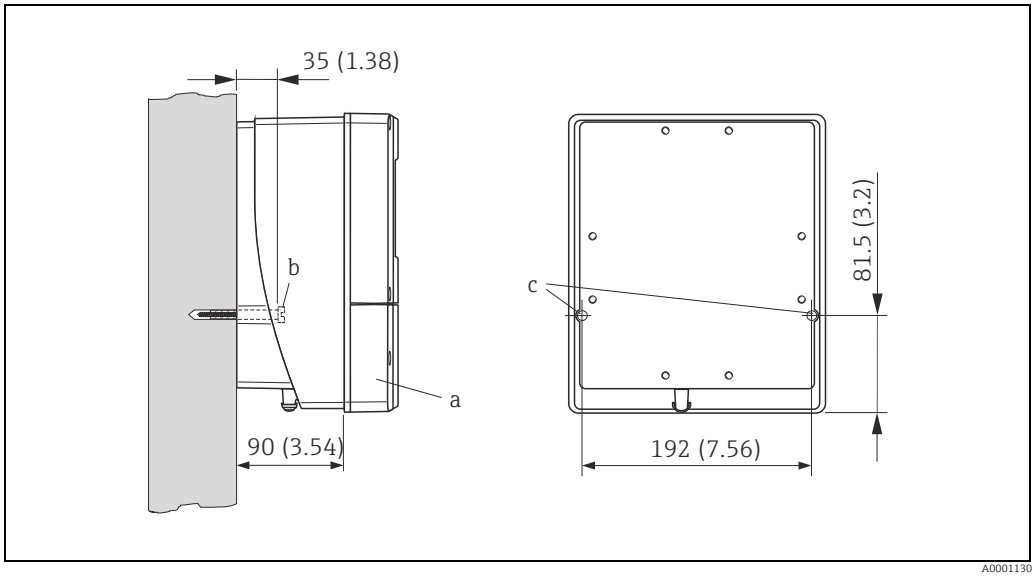

Fig. 9: Mounted directly on the wall

Installation in control panel

1. Prepare the opening in the panel → 10.
2. Slide the housing into the opening in the panel from the front.
3. Screw the fasteners onto the wall-mount housing.
4. Screw the threaded rods into the holders and tighten them until the housing is secured on the panel wall. Afterwards, tighten the locking nuts. Additional support is not necessary.

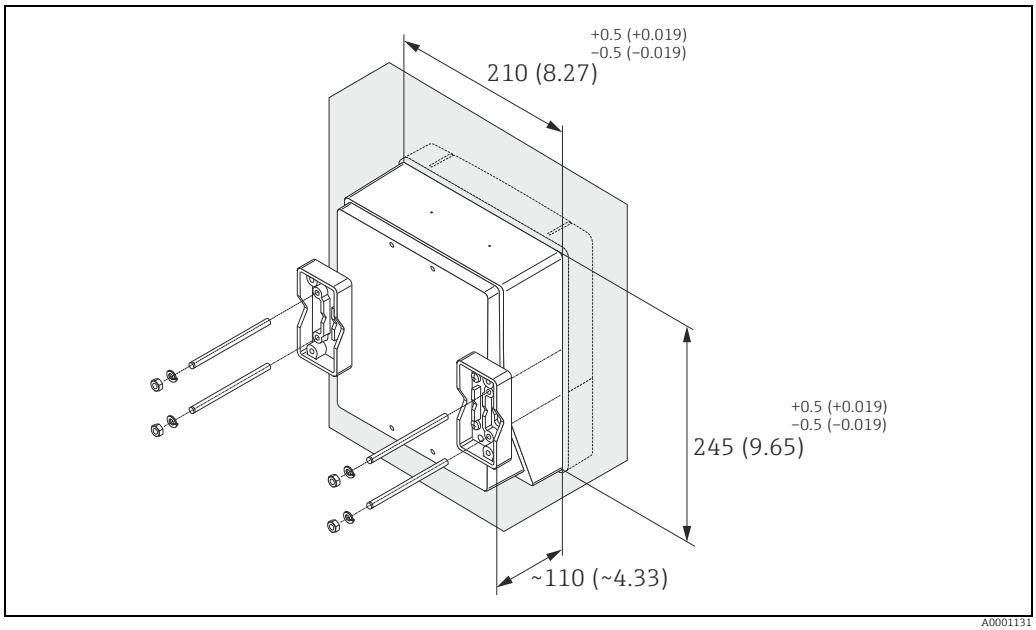

Fig. 10: Panel installation (wall-mount housing)

Pipe mounting

The assembly should be performed by following the instructions in → 11.

Caution!
If a warm pipe is used for installation, ensure that the housing temperature does not exceed the permitted value of +60 °C (+140 °F).

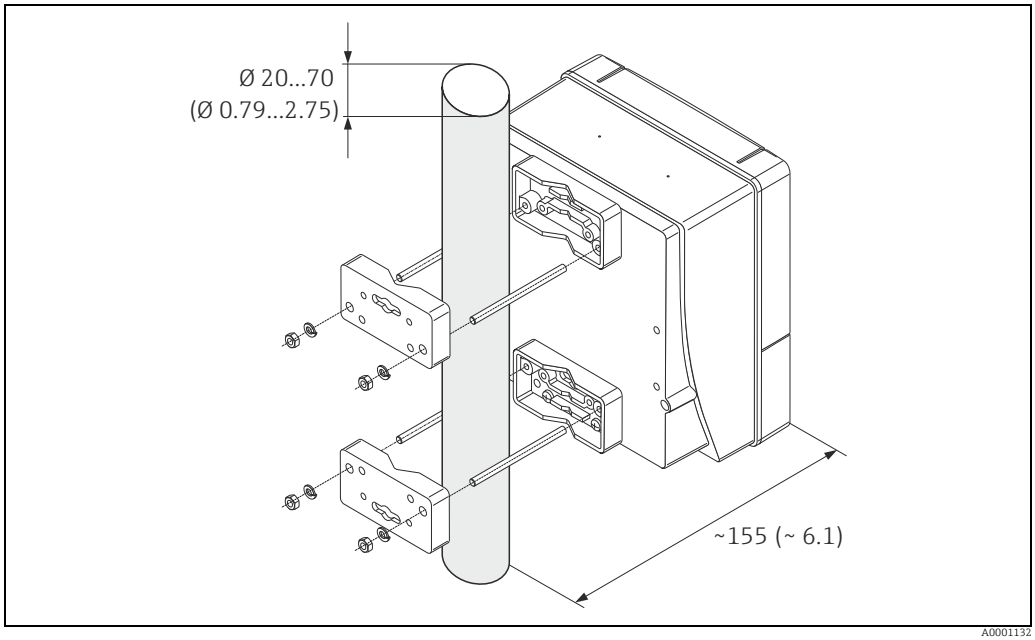

Fig. 11: Pipe mounting (wall-mount housing)

4.2.3 Turning the local display

1. Unscrew cover of the electronics compartment from the transmitter housing.
2. Press the side latches on the display module and remove the module from the electronics compartment cover plate.
3. Rotate the display to the desired position (max. 4 × 45 ° in both directions), and reset it onto the electronics compartment cover plate.
4. Screw the cover of the electronics compartment firmly back onto the transmitter housing.

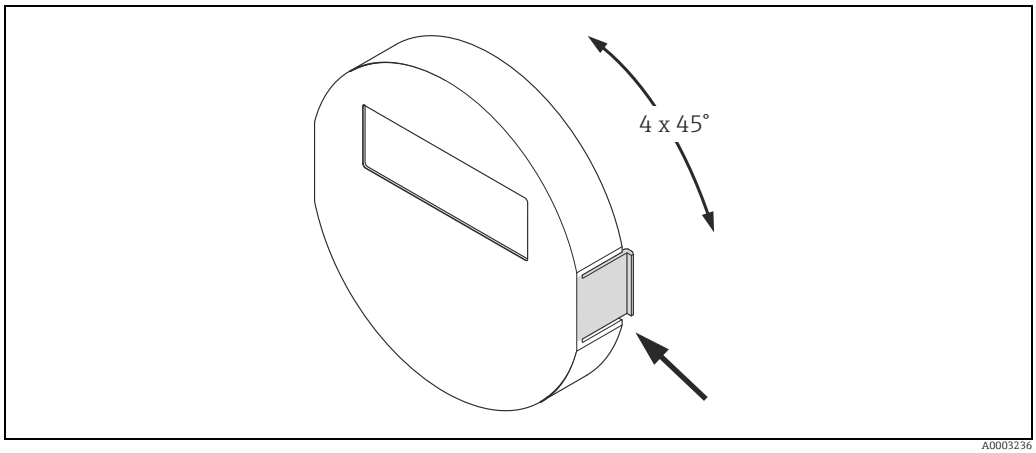

Fig. 12: Turning the local display (field housing)

4.3 Post-installation check

Perform the following checks after installing the measuring device in the pipe:

Device condition and specifications	Notes
Is the device damaged (visual inspection)?	–
Does the device correspond to specifications at the measuring point, including process temperature and pressure, ambient temperature, measuring range etc.?	→ 🖹 7
Installation	Notes
Does the arrow on the sensor nameplate match the direction of flow through the pipe?	–
Are the measuring point number and labeling correct (visual inspection)?	–
Is the orientation chosen for the sensor correct, in other words suitable for sensor type, fluid properties (outgassing, with entrained solids) and fluid temperature?	→ 🖹 11
Process environment / process conditions	Notes
Is the measuring device protected against moisture and direct sunlight?	–

5 Wiring

Warning!
When connecting Ex-certified devices, see the notes and diagrams in the Ex-specific supplement to these Operating Instructions. Please do not hesitate to contact your Endress+Hauser sales office if you have any questions.

Note!
The measuring device does not have an internal disconnecting device. Therefore, assign a switch or circuit breaker to the measuring device with which the voltage supply line can be disconnected from the power system.

5.1 Modbus RS485 cable specifications

In the EIA/TIA-485 standard, two versions (cable type A and B) are specified for the bus line and can be used for all transmission rates. However, we recommend you use cable type A. The cable specification for cable type A is provided in the following table:

Cable type A	
Characteristic impedance	135 to 165 Ω at a measuring frequency of 3 to 20 MHz
Cable capacitance	< 30 pF/m (< 9.2 pF/ft)
Core cross-section	> 0.34 mm² (AWG 22)
Cable type	wisted pairs
Loop-resistance	≤110 Ω/km (≤0.034 Ω/ft)
Signal damping	Max. 9 dB over the entire length of the cable cross-section
Shielding	Copper braided shielding or braided shielding and foil shielding

Note the following points for the bus structure:
- All the measuring devices are connected in a bus structure (line).
- Using cable type A and with a transmission rate of 115200 Baud, the maximum line length (segment length) of the Modbus RS485 system is 1200 m (3936 ft). The total length of the spurs may not exceed a maximum of 6.6 m (21.7 ft) here.
- A maximum of 32 users are permitted per segment.
- Each segment is terminated at either end with a terminating resistor.
- The bus length or the number of users can be increased by introducing a repeater.

5.1.1 Shielding and grounding

When planning the shielding and grounding for a fieldbus system, there are three important points to consider:
- Electromagnetic compatibility (EMC)
- Explosion protection
- Employee safety

To ensure the optimum electromagnetic compatibility of systems, it is important that the system components and above all the cables, which connect the components, are shielded and that no portion of the system is unshielded. Ideally, the cable shields are connected to the normally metal housings of the connected field devices. Since these are generally connected to the protective ground, the shield of the bus cable is grounded many times. Make sure that the stripped and twisted lengths of cable shield to the terminals are as short as possible. This approach, which provides the best electromagnetic compatibility and employee safety, can be used without restriction in systems with optimum potential equalization.

In the case of systems without potential equalization, a mains frequency (50 Hz) equalizing current can flow between two grounding points which can destroy the cable in unfavorable cases, e.g. when it exceeds the permissible shield current. To suppress the low frequency

equalizing currents on systems without potential equalization, it is therefore recommended to connect the cable shield directly to the building ground (or protective ground) at one end only and to use capacitive coupling to connect all other grounding points.

Caution!
The legal EMC requirements are fulfilled **only** when the cable shield is grounded on both sides.

5.2 Connecting the remote version

5.2.1 Connecting the connecting cable for sensor/transmitter

Warning!
- Risk of electric shock. Switch off the power supply before opening the device. Do not install or wire the device while it is connected to the power supply. Failure to comply with this precaution can result in irreparable damage to the electronics.
- Risk of electric shock. Connect the protective ground to the ground terminal on the housing before the power supply is applied.
- You may only connect the sensor to the transmitter with the same serial number. Communication errors can occur if this is not observed when connecting the devices.

1. Remove the cover (d) from the connection compartment or sensor housing.
2. Feed the connecting cable (e) through the appropriate cable runs.
3. Establish the wiring between the sensor and transmitter in accordance with the wiring diagram (→ 13 or wiring layout in the screw cap).
4. Seal the connection compartment or the transmitter housing again.

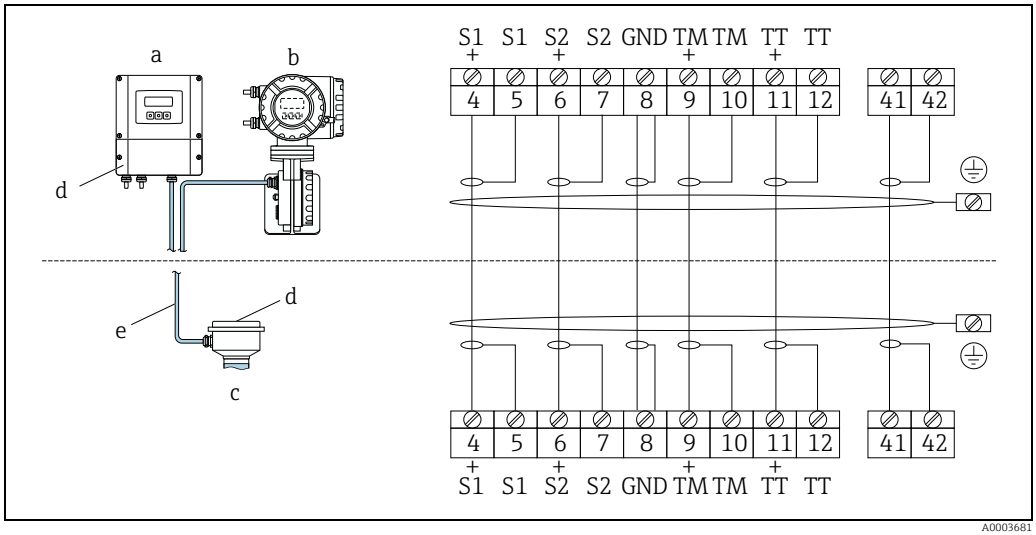

Fig. 13: Connecting the remote version

a Transmitter wall-mount housing: non-hazardous area → separate documentation
b Transmitter wall-mount housing: ATEX II2G / Zone 1 / NEC/CEC → separate Ex documentation
c Sensor connection housing
d Cover of connection compartment or connection housing
e Connecting cable

Terminal No.: 4/5 = gray; 6/7 = green; 8 = yellow; 9/10 = pink; 11/12 = white; 41/42 = brown

5.2.2 Cable specification, connecting cable

The specifications of the cable connecting the transmitter and the sensor of the remote version are as follows:
- 6 × 0.38 mm^2 (20 AWG) PVC cable with common shield and individually shielded cores
- Conductor resistance: ≤ 50 Ω/km (≤ 0.015 Ω/ft)
- Capacitance core/shield: ≤ 140 pF/m (≤ 42.7 pF/ft)
- Cable length: max. 20 m (65.6 ft)
- Permanent operating temperature: max. +105 °C (+221 °F)

Note!
The cable must be installed securely, to prevent movement.

5.3 Connecting the measuring unit

5.3.1 Transmitter connection

Warning!
- Risk of electric shock. Switch off the power supply before opening the device. Do not install or wire the device while it is connected to the power supply. Failure to comply with this precaution can result in irreparable damage to the electronics.
- Risk of electric shock. Connect the protective ground to the ground terminal on the housing before the power supply is applied unless special protection measures have been taken (e. g. galvanically isolated power supply SELV or PELV).
- Compare the specifications on the nameplate with the local supply voltage and frequency. The national regulations governing the installation of electrical equipment also apply.

1. Remove the cover of the connection compartment (a) from the transmitter housing.
2. Feed the power supply cable (b), signal cable (g) and fieldbus cable (d) through the appropriate cable entries.
3. Perform wiring in accordance with the respective terminal assignment and the associated wiring diagram.

   Caution!
   – Risk of damaging the fieldbus cable. Observe the information about shielding and grounding the fieldbus cable (→ 19).
   – We recommend that the fieldbus cable not be looped using conventional cable glands. If even just one measuring device is subsequently replaced, the bus communication will have to be interrupted.
4. Screw the cover of the connection compartment (a) firmly onto the transmitter housing.

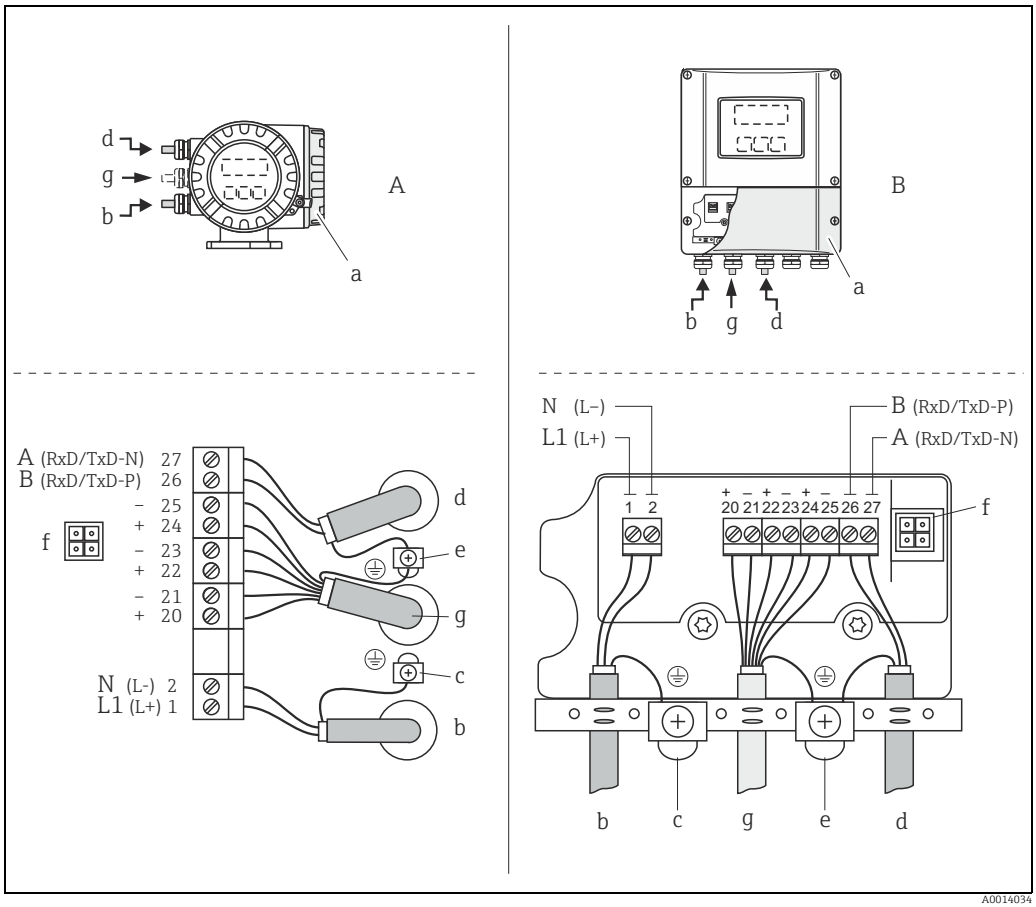

Fig. 14: Connecting the transmitter, cable cross-section: max. 2.5 mm² (14 AWG)

A View A (field housing)
B View B (wall-mount housing)

a Connection compartment cover
b Cable for power supply: 85 to 253 V AC, 20 to 55 V AC, 16 to 62 V DC
- *Terminal No. 1: L1 for AC, L+ for DC*
- *Terminal No. 2: N for AC, L- for DC*

c Ground terminal for protective ground
d Fieldbus cable
- *Terminal No. 26: A (RxD/TxD-P)*
- *Terminal No. 27: B (RxD/TxD-N)*

e Ground terminal for signal cable shield/fieldbus cable shield
Observe the following:
- *the shielding and grounding of the fieldbus cable → 🖹 19*
- *that the stripped and twisted lengths of cable shield to the ground terminal are as short as possible*

f Service adapter for connecting service interface 193 (FieldCare)
g Signal cable: terminal assignment → 🖹 22

5.3.2 Terminal assignment

Electrical values for inputs → 🖹 81.
Electrical values for outputs → 🖹 81.

Order characteristic for "inputs/outputs"	Terminal No. (inputs/outputs)			
	20 (+) / 21 (-)	22 (+) / 23 (-)	24 (+) / 25 (-)	26 (+) / 27 (–)
Fixed communication boards (permanent assignment)				
Q	–	–	Status input	Modbus RS485
Flexible communication boards				
N	Current output	Frequency output	Status input	Modbus RS485
7	Relay output 2	Relay output 1	Status input	Modbus RS485

5.4 Degree of protection

The measuring device fulfills all the requirements for IP 67.

Compliance with the following points is mandatory following installation in the field or servicing, in order to ensure that IP 67 protection is maintained:
- The housing seals must be clean and undamaged when inserted into their grooves. The seals must be dried, cleaned or replaced if necessary.
- The screws and screw covers must be firmly tightened.
- The cables used for connection must be of the specified outside diameter → 82, Cable entries.
- The cable entries must be firmly tightened (point **a** → 15).
- The cable must loop down in front of the cable entry ("water trap") (point **b** → 15). This arrangement prevents moisture penetrating the entry.

Note!
The cable entries may not point up.

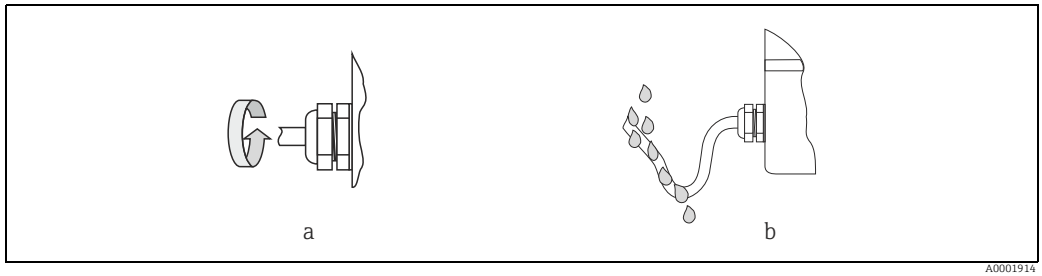

Fig. 15: Installation instructions, cable entries

- Remove all unused cable entries and insert plugs instead.
- Do not remove the grommet from the cable entry.

Caution!
Do not loosen the screws of the sensor housing, as otherwise the degree of protection guaranteed by Endress+Hauser no longer applies.

5.5 Post-connection check

Perform the following checks after completing electrical installation of the measuring device:

Device condition and specifications	Notes
Are cables or the device damaged (visual inspection)?	–
Electrical connection	**Notes**
Does the supply voltage match the specifications on the nameplate?	85 to 253 V AC (45 to 65 Hz) 20 to 55 V AC (45 to 65 Hz) 16 to 62 V DC
Do the cables comply with the specifications?	→ 🖹 21
Do the cables have adequate strain relief?	–
Is the cable type route completely isolated? Without loops and crossovers?	–
Are the power supply and signal cables correctly connected?	→ Wiring diagram inside the cover of the terminal compartment
Only remote version: Is the flow sensor connected to the matching transmitter electronics?	Check serial number on nameplates of sensor and connected transmitter.
Only remote version: Is the connecting cable between sensor and transmitter connected correctly?	→ 🖹 20
Are all screw terminals firmly tightened?	–
Are all cable entries installed, firmly tightened and correctly sealed? Cables looped as "water traps"?	→ 🖹 23, "Degree of protection" section
Are all housing covers installed and firmly tightened?	–
Fieldbus electrical connection	**Notes**
Has each fieldbus segment been terminated at both ends with a bus terminator?	→ 🖹 54
Has the max. length of the fieldbus cable been observed in accordance with the specifications?	→ 🖹 19
Has the max. length of the spurs been observed in accordance with the specifications?	→ 🖹 19
Is the fieldbus cable fully shielded and correctly grounded?	→ 🖹 19

6 Operation

6.1 Display and operating elements

The local display enables you to read all important parameters directly at the measuring point and configure the device using the "Quick Setup" or the function matrix. The display consists of four lines; this is where measured values and/or status variables (direction of flow, empty pipe, bar graph etc.) are displayed. You can change the assignment of display lines to different variables to suit your needs and preferences (→ "Description of Device Parameters" manual, GP00003D/06/).

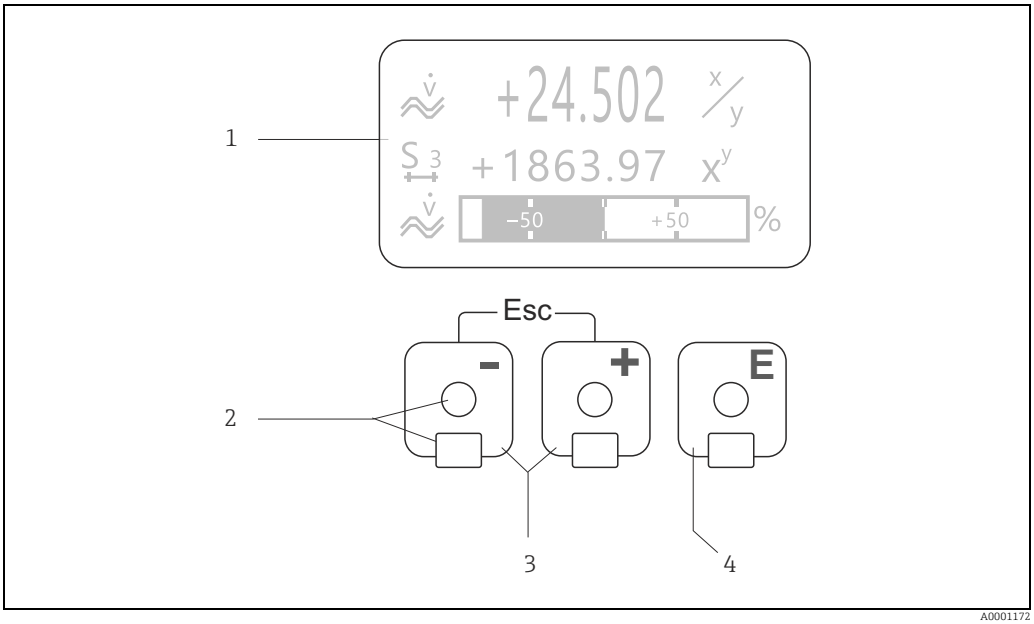

Fig. 16: Display and operating elements

1 Liquid crystal display
The backlit, four-line liquid crystal display shows measured values, dialog texts, fault messages and notice messages. HOME position (operating mode) is the term given to the display during normal operation.
Readings displayed
2 Optical sensors for "Touch Control"
3 Plus/minus keys
- *HOME position → Direct access to totalizer values and actual values of inputs/outputs*
- *Enter numerical values, select parameters*
- *Select different blocks, groups and function groups within the function matrix*

Press the +/- keys (− / +) simultaneously to trigger the following functions:
- *Exit the function matrix step by step → HOME position*
- *Press and hold the ESC keys for longer than 3 seconds → Return directly to home position*
- *Cancel data entry*

4 Enter key
- *HOME position → Entry into the function matrix*
- *Save the numerical values you input or settings you change*

6.1.1 Readings displayed (operation mode)

The display area consists of three lines in all; this is where measured values are displayed, and/or status variables (direction of flow, bar graph etc.). You can change the assignment of display lines to different variables to suit your needs and preferences (→ "Description of Device Parameters" manual).

Multiplex mode
A maximum of two different display variables can be assigned to each line. Variables multiplexed in this way alternate every 10 seconds on the display.

Error messages
Display and presentation of system/process errors → 📄 30

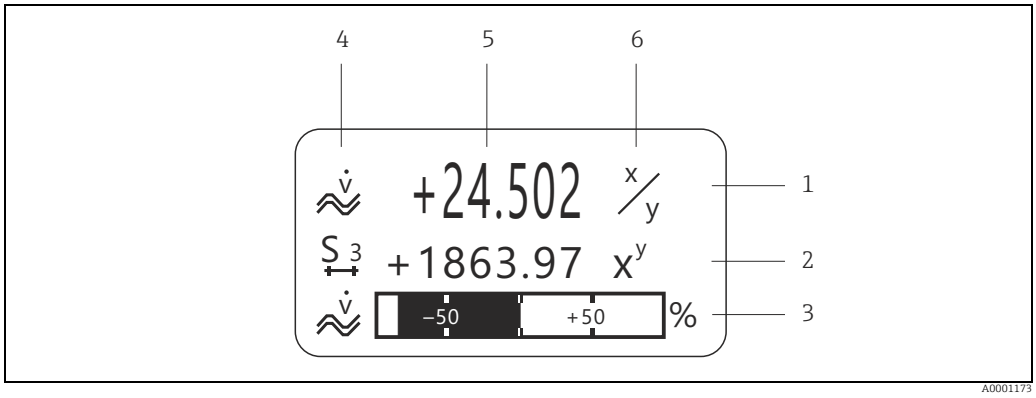

Fig. 17: Typical display for normal operating mode (HOME position)

1 Main display line: shows primary measured values, e.g. mass flow in [kg/h]
2 Additional line: shows measured variables and status variables, e.g. totalizer No. 3 in [t]
3 Information line: shows additional information on the measured variables and status variables, e.g. bar graph display of the full scale value achieved by the mass flow
4 "Info icons" field: icons representing additional information on the measured values are shown in this field. For a full list of the icons and their meanings see → 📄 27
5 "Measured values" field: the current measured values appear in this field
6 "Unit of measure" field: the units of measure and time defined for the current measured values appear in this field

6.1.2 Additional display functions

From HOME position, use the ⊞ keys to open an "Info Menu" containing the following information:
- Totalizer (including overflow)
- Actual values or states of the configured inputs/outputs
- Device TAG number (user-definable)

⊞ → Scan of individual values within the Info Menu
⊟ + ⊞ (Esc key) → Back to HOME position

6.1.3 Icons

The icons which appear in the field on the left make it easier to read and recognize measured variables, device status, and error messages.

Icon	Meaning	Icon	Meaning
S	System error	P	Process error
↯	Fault message (with effect on outputs)	!	Notice message (without effect on outputs)
| 1 to n	Current output 1 to n	P 1 to n	Pulse output 1 to n
F 1 to n	Frequency output	S 1 to n	Status/relay output 1 to n (or status input)
Σ 1 to n	Totalizer 1 to n		
 A0001181	Measuring mode; PULSATING FLOW	 A0001182	Measuring mode; SYMMETRY (bidirectional)
 A0001183	Measuring mode; STANDARD	 A0001184	Counting mode, totalizer; BALANCE (forward and reverse flow)
 A0001185	Counting mode, totalizer; forward	 A0001186	Counting mode, totalizer; reverse
 A0001187	Status input	 A0001188	Volume flow
 A0001200	Fluid density	 A0001208	Reference density
 A0001207	Medium temperature	 A0001206	Modbus communication active

6.2 Brief guide to the function matrix

Note!
- See the general notes → 29.
- Function descriptions → see the "Description of Device Parameters" manual.

1. HOME position →Ⓔ→ Entry into the function matrix.
2. Select a block (e.g. OUTPUTS).
3. Select a group (e.g. CURRENT OUTPUT 1).
4. Select a function group (e.g. SETTINGS).
5. Select a function (e.g. TIME CONSTANT).
   Change parameter / enter numerical values:
   ± → Select or enter enable code, parameters, numerical values
   Ⓔ→ Save your entries
6. Exit the function matrix:
   – Press and hold down Esc key (esc) for longer than 3 seconds → HOME position.
   – Repeatedly press Esc key (esc) → Return step by step to HOME position.

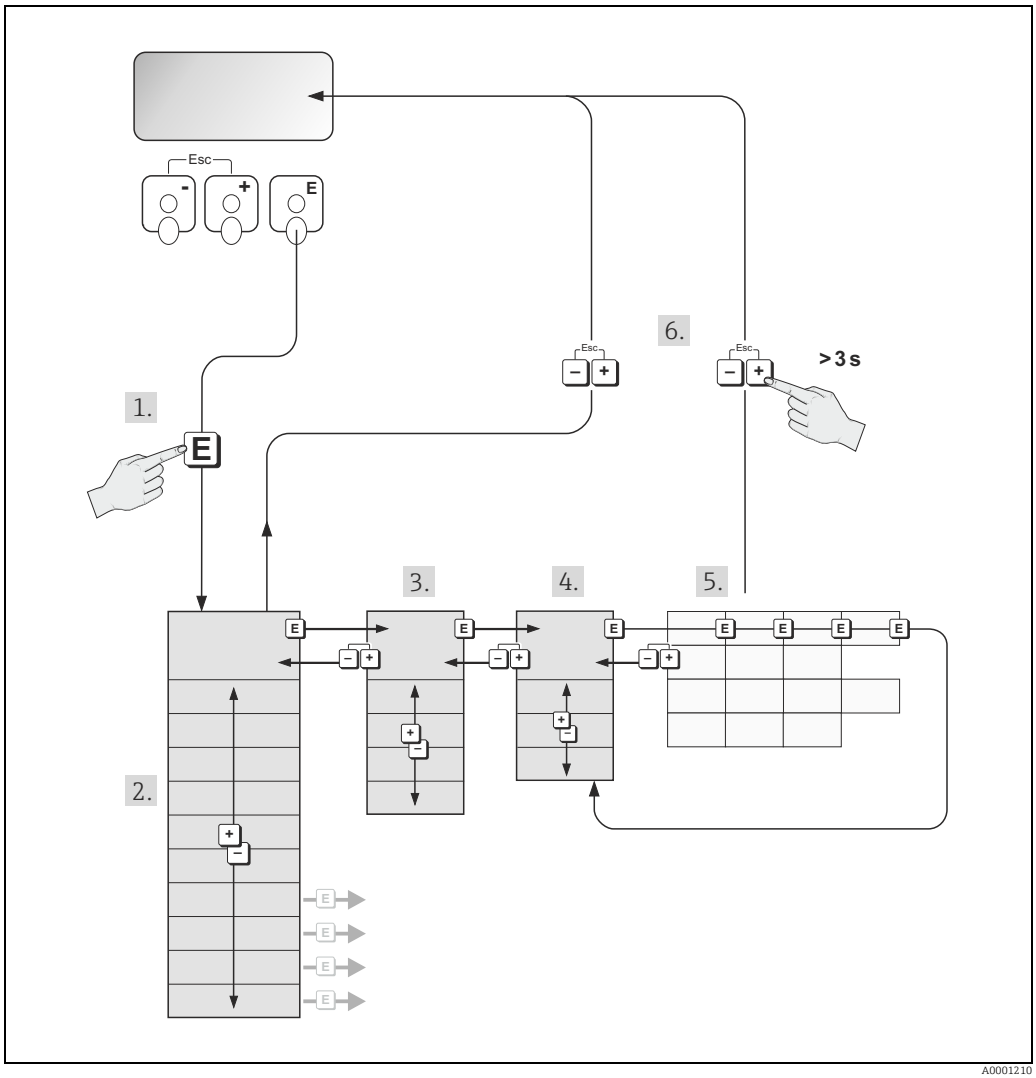

Fig. 18: Selecting functions and configuring parameters (function matrix)

6.2.1 General notes

The Quick Setup menu contains the default settings that are adequate for commissioning. Complex measuring operations on the other hand necessitate additional functions that you can configure as necessary and customize to suit your process parameters. The function matrix, therefore, comprises a multiplicity of additional functions which, for the sake of clarity, are arranged on a number of menu levels (blocks, groups, and function groups).

Comply with the following instructions when configuring functions:
- You select functions as described already → 28. Each cell in the function matrix is identified by a numerical or letter code on the display.
- You can switch off certain functions (OFF). If you do so, related functions in other function groups will no longer be displayed.
- Certain functions prompt you to confirm your data entries. Press P to select "SURE [YES]" and press F to confirm. This saves your setting or starts a function, as applicable.
- Return to the HOME position is automatic if no key is pressed for 5 minutes.
- Programming mode is disabled automatically if a key is not pressed within 60 seconds following automatic return to the HOME position.



Caution!
All functions are described in detail, as is the function matrix itself, in the "Description of Device Parameters" manual which is a separate part of these Operating Instructions.



Note!
- The transmitter continues to measure while data entry is in progress, i.e. the current measured values are output via the signal outputs in the normal way.
- If the supply voltage fails all preset and parameterized values remain safely stored in the EEPROM.

6.2.2 Enabling the programming mode

The function matrix can be disabled. Disabling the function matrix rules out the possibility of inadvertent changes to device functions, numerical values or factory settings. A numerical code (factory setting = 84) has to be entered before settings can be changed. If you use a code number of your choice, you exclude the possibility of unauthorized persons accessing data (→ "Description of Device Parameters" manual).

Comply with the following instructions when entering codes:
- If programming is disabled and the ± operating elements are pressed in any function, a prompt for the code automatically appears on the display.
- If "0" is entered as the customer's code, programming is always enabled.
- Your Endress+Hauser representative can be of assistance if you mislay your personal code.



Caution!
Changing certain parameters such as all sensor characteristics, for example, influences numerous functions of the entire measuring system, particularly measuring accuracy. There is no need to change these parameters under normal circumstances and consequently, they are protected by a special code known only to Endress+Hauser representatives. Please contact Endress+Hauser if you have any questions.

6.2.3 Disabling the programming mode

Programming mode is disabled if you do not press an operating element within 60 seconds following automatic return to the HOME position.
Programming can also be disabled by entering any number (other than the customer's code) in the "ACCESS CODE" function.

6.3 Error messages

6.3.1 Type of error

Errors that occur during commissioning or measuring are displayed immediately. If two or more system or process errors occur, the error with the highest priority is the one shown on the display.

The measuring system distinguishes between two types of error:

- **System error**
  This group comprises all device errors, e.g. communication errors, hardware errors etc. → 66
- **Process error**
  This group includes all application errors, e.g. fluid not homogeneous etc. → 71

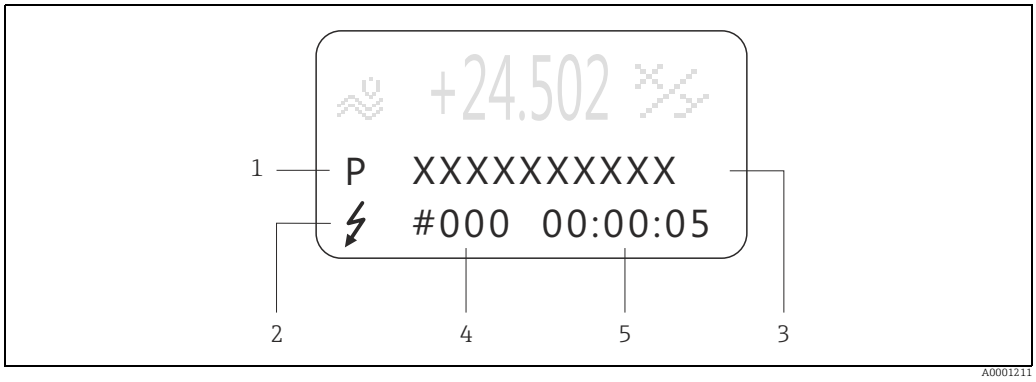

Fig. 19: Error messages on the display (example)

1 Error type: P = process error, S = system error
2 Error message type: ϟ = Fault message, ! = Notice message
3 Error designation: e.g. FLUID INHOM. = fluid is not homogeneous
4 Error number: e.g. #702
5 Duration of most recent error occurrence (in hours, minutes and seconds)

6.3.2 Error message type

The measuring device always assigns system and process errors which occur to two types of error messages (**fault** or **notice messages**), resulting in different weightings.
Serious system errors, e.g. module defects, are always identified and classed as "fault messages" by the measuring device.

Notice message (!)

- The error in question has no effect on the current operating mode and on the outputs of the measuring device.
- Displayed as → Exclamation mark (!), type of error (S: system error, P: process error)

Fault message (ϟ)

- The error in question interrupts or stops running operation and has a direct effect on the outputs. The response of the outputs (failsafe mode) can be defined by means of functions in the function matrix.
- Displayed as → Lightning flash (ϟ), type of error (S: system error, P: process error)

Note!

- Error conditions can be output via the relay outputs or fieldbus communication.
- If an error message occurs, an upper or lower signal level for the breakdown information according to NAMUR recommendation NE 43 can be output via the current output.

6.3.3 Confirming error messages

For the sake of plant and process safety, the measuring device can be configured in such a way that fault messages displayed (ϟ) always have to be rectified and acknowledged locally by pressing E. Only then do the error messages disappear from the display. This option can be switched on or off by means of the "ACKNOWLEDGE FAULT MESSAGES" function (→ "Description of Device Parameters" manual).



Note!
- Fault messages (ϟ) can also be reset and confirmed via the status input.
- Notice messages (!) do not require acknowledgment. Note, however, that they remain visible until the cause of the error has been rectified.

6.4 Modbus RS485 communication

6.4.1 Modbus RS485 technology

The Modbus is an open, standardized fieldbus system which is deployed in the areas of manufacturing automation, process automation and building automation.

System architecture

The Modbus RS485 is used to specify the functional characteristics of a serial fieldbus system with which distributed, digital automation systems are networked together.
The Modbus RS485 distinguishes between master and slave devices.

- **Master devices**
  Master devices determine the data traffic on the fieldbus system. They can send data without an external request.
- **Slave devices**
  Slave devices, like this measuring device, are peripheral devices. They do not have their own access rights to the data traffic of the fieldbus system and only send their data due to an external request from a master.

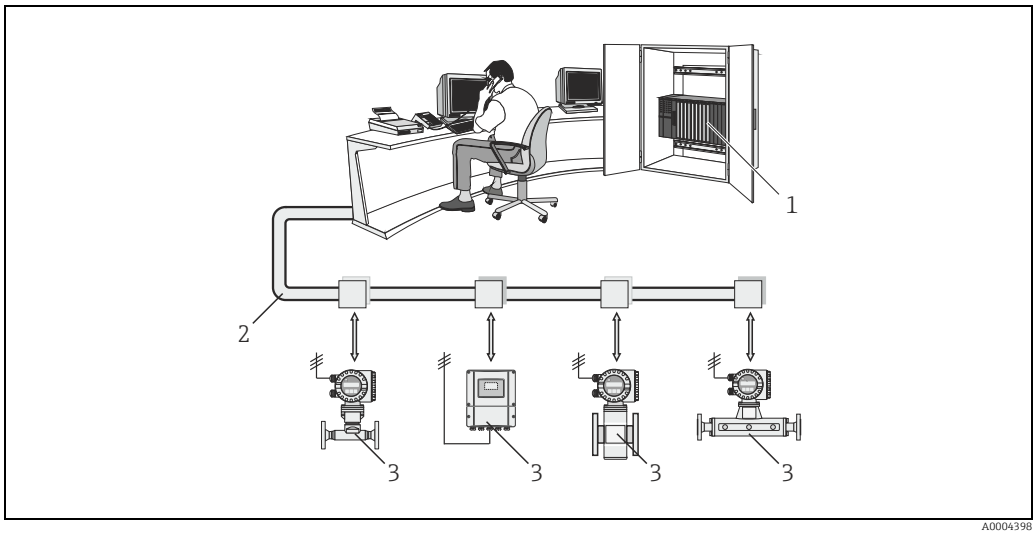

Fig. 20: Modbus RS485 system architecture

1 Modbus master (PLC etc.)
2 Modbus RS485
3 Modbus slave (measuring devices etc.)

Master/slave communication

A distinction is made between two methods of communication with regard to master/slave communication via Modbus RS485:

- **Polling (request-response-transaction)**
  The master sends a request telegram to **one** slave and waits for the slave's response telegram. Here, the slave is contacted directly due to its unique bus address (1 to 247).

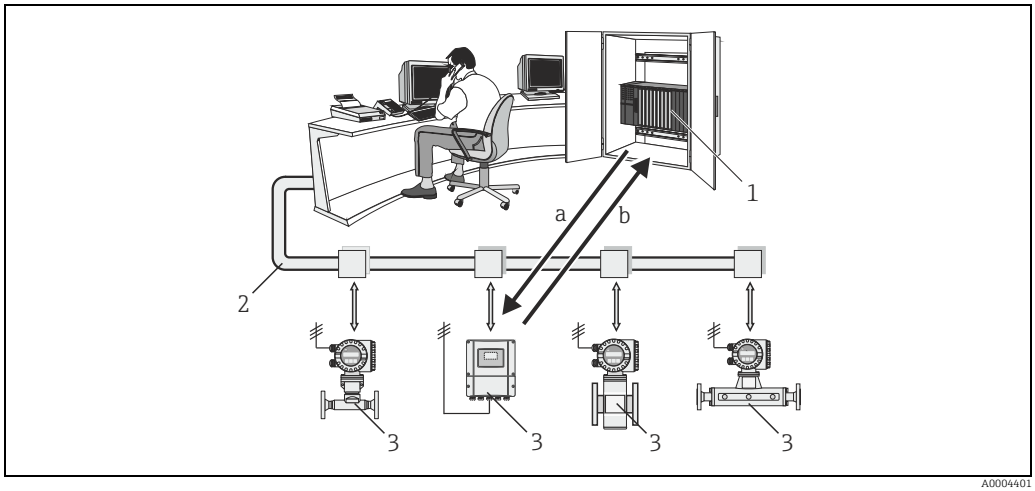

Fig. 21: Modbus RS485 polling data traffic

1 Modbus master (PLC etc.)
2 Modbus RS485
3 Modbus slave (measuring devices etc.)
a Request telegram to this one specific Modbus slave
b Response telegram to the Modbus master

- **Broadcast message**
  By means of the global address 0 (broadcast address), the master sends a command to all the slaves in the fieldbus system. The slaves execute the command without reporting back to the master. Broadcast messages are only permitted in conjunction with write function codes.

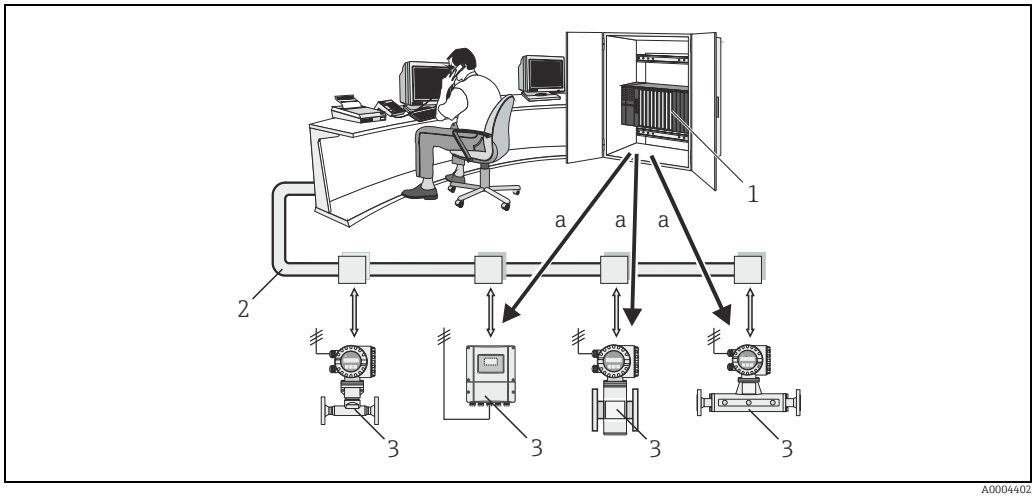

Fig. 22: Modbus RS485 polling data traffic

1 Modbus master (PLC etc.)
2 Modbus RS485
3 Modbus slave (measuring devices etc.)
a Broadcast message - command to all Modbus slaves (request is executed without a response telegram to the master)

6.4.2 Modbus telegram

General

The master-slave process is used for data exchange. Only the master can initiate data transmission. Following the prompt, the slave sends the master the necessary data as a response telegram or executes the command requested by the master.

Telegram structure

The data is transferred between the master and slave by means of a telegram.
A request telegram from the master contains the following telegram fields:

Telegram structure:

Slave address	Function code	Data	Check sum

- Slave address
  The slave address can be in an address range from 1 to 247.
  The master talks to all the slaves simultaneously by means of the slave address 0 (broadcast message).
- Function code
  The function code determines which read, write and test operations should be executed by means of the Modbus protocol.
  Function codes supported by the measuring device → 📄 34
- Data
  Depending on the function code, the following values are transmitted in this data field:
  – Register start address (from which the data are transmitted)
  – Number of registers
  – Write/read data
  – Data length
  – etc.
- Check sum (CRC or LRC check)
  The telegram check sum forms the end of the telegram.

The master can send another telegram to the slave as soon as it has received an answer to the previous telegram or once the time-out period set at the master has expired. This time-out period can be specified or modified by the user and depends on the slave response time.

If an error occurs during data transfer or if the slave cannot execute the command from the master, the slave returns an error telegram (exception response) to the master.

The slave response telegram consists of telegram fields which contain the requested data or which confirm that the action requested by the master has been executed. It also contains a check sum.

6.4.3 Modbus function codes

The function code determines which read, write and test operations should be executed by means of the Modbus protocol. The measuring device supports the following function codes:

Function code	Name in accordance with Modbus specification	Description
03	READ HOLDING REGISTER	Reads one or more registers of the Modbus slave. 1 to a maximum of 125 consecutive registers (1 register = 2 byte) can be read with a telegram. **Application:** For reading measuring device parameters with read and write access, such as reading the batch quantity.

Function code	Name in accordance with Modbus specification	Description
04	READ INPUT REGISTER	Reads one or more registers of the Modbus slave. 1 to a maximum of 125 consecutive registers (1 register = 2 byte) can be read with a telegram. **Application:** For reading measuring device parameters with read access, such as reading the measured values (mass flow, temperature etc.).
06	WRITE SINGLE REGISTERS	Writes **a single** slave register with a new value. **Application:** For writing just one measuring device parameter, such as writing the batch quantity or resetting the totalizer. Note! Function code 16 is used for writing several registers by means of just one telegram.
08	DIAGNOSTICS	Checks the communication connection between the master and slave. The following diagnostics codes are supported: ▪ Sub-function 00 = Return query data (loopback test) ▪ Sub-function 02 = Return diagnostics register
16	WRITE MULTIPLE REGISTERS	Writes several slave registers with a new value. A maximum of 120 consecutive registers can be written with a telegram. **Application:** For writing several measuring device parameters, such as writing the batch quantity and resetting the totalizer.
23	READ/WRITE MULTIPLE REGISTERS	Simultaneous reading and writing of 1 to max. 118 registers in a telegram. Write access is executed before read access. **Application:** For writing and reading several measuring device parameters, such as writing the batch quantity and the correction quantity and reading the totalizer value.

Note!
- Broadcast messages are only permitted with function codes 06, 16 and 23.
- The measuring device does not differentiate between function codes 03 and 04. These codes have the same result.

6.4.4 Maximum number of writes

If a nonvolatile device parameter is modified via the Modbus function codes 06, 16 or 23, this change is saved in the EEPROM of the measuring device.
The number of writes to the EEPROM is technically restricted to a maximum of 1 million. Attention must be paid to this limit since, if exceeded, it results in data loss and measuring device failure. For this reason, avoid constantly writing nonvolatile device parameters via the Modbus.

6.4.5 Modbus register addresses

Each device parameter has its own register address. The Modbus master uses this register address to talk to the individual device parameters and access the device data.
The register addresses of the individual device parameters can be found in the "Description of Device Parameters" manual under the parameter description in question.

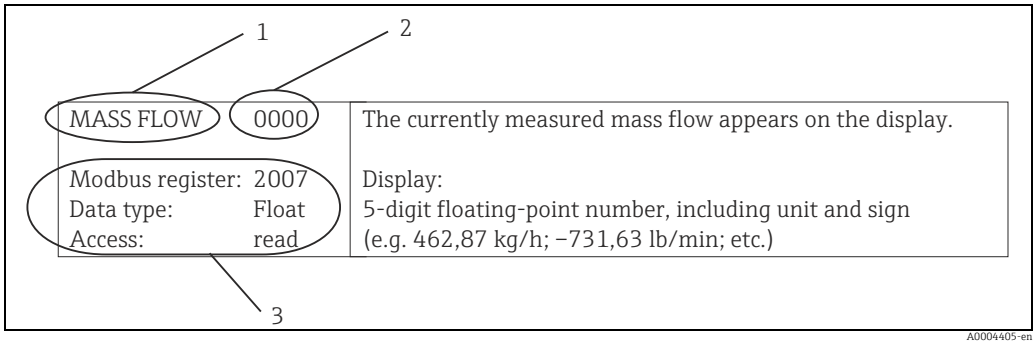

Fig. 23: Example of how a function description is illustrated in the "Description of Device Parameters" manual

1 Name of the function
*2 Number of the function (appears on the local display; is **not** identical to the Modbus register address)*
3 Information on communication via Modbus RS485
– Modbus register (information in decimal numerical format)
– Data type: Float, Integer or String
– Possible ways of accessing the function:
read = read access via function codes 03, 04 or 23
write = write access via function codes 06, 16 or 23

Modbus register address model

The Modbus RS485 register addresses of the measuring device are implemented in accordance with "Modbus Applications Protocol Specification V1.1".

Note!
In addition to the specification mentioned above, systems are also deployed which work with a register address model in accordance with the "Modicon Modbus Protocol Reference Guide (PI-MBUS-300 Rev. J)" specification. With this specification, the register address is extended, depending on the function code used. A "3" is put in front of the register address in the "read" access mode and a "4" in the "write" access mode.

Function code	Access type	Register in accordance with: "Modbus Applications Protocol Specification"		Register in accordance with: "Modicon Modbus Protocol Reference Guide"
03 04 23	Read	XXXX Example: mass flow = 2007	→	3XXXX Example: mass flow = 32007
06 16 23	Write	XXXX Example: reset totalizer = 6401	→	4XXXX Example: reset totalizer = 46401

Response times

The time it takes a measuring device to respond to a request telegram from the Modbus master is typically 25 to 50 ms. If faster response times are needed for time-critical applications (e.g. batching applications), the "auto-scan buffer" is to be used.

Note!
It may take longer for a command to be executed in the device. The data is not updated until the command has been executed. Especially write commands are affected by this.

Data types

The following data types are supported by the measuring device:

- **FLOAT** (floating-point numbers IEEE 754)
  Data length = 4 bytes (2 registers)

Byte 3	Byte 2	Byte 1	Byte 0
SEEEEEEE	EMMMMMMM	MMMMMMMM	MMMMMMMM

S = sign
E = exponent
M = mantissa

- **INTEGER**
  Data length = 2 bytes (1 register)

Byte 1	Byte 0
Most significant byte (MSB)	Least significant byte (LSB)

- **STRING**
  Data length = depends on device parameter,
  e.g. illustration of a device parameter with a data length = 18 bytes (9 registers):

Byte 17	Byte 16	to	Byte 1	Byte 0
Most significant byte (MSB)		to		Least significant byte (LSB)

Byte transmission sequence

Byte addressing, i.e. the transmission sequence of the bytes, is not specified in the Modbus specification. For this reason, it is important to coordinate the addressing method between the master and slave during commissioning. This can be configured in the measuring device by means of the "BYTE ORDER" parameter (→ "Description of Device Parameters" manual).

The bytes are transmitted depending on the option selected in the "BYTE ORDER" parameter:

FLOAT:

	Sequence			
Selection	1st	2nd	3rd	4th
1 – 0 – 3 – 2 *	Byte 1 (MMMMMMMM)	Byte 0 (MMMMMMMM)	Byte 3 (SEEEEEEE)	Byte 2 (EMMMMMMM)
0 – 1 – 2 – 3	Byte 0 (MMMMMMMM)	Byte 1 (MMMMMMMM)	Byte 2 (EMMMMMMM)	Byte 3 (SEEEEEEE)
2 – 3 – 0 – 1	Byte 2 (EMMMMMMM)	Byte 3 (SEEEEEEE)	Byte 0 (MMMMMMM)	Byte 1 (MMMMMMM)
3 – 2 – 1 – 0	Byte 3 (SEEEEEEE)	Byte 2 (EMMMMMMM)	Byte 1 (MMMMMMMM)	Byte 0 (MMMMMMMM)

* = Factory setting
S = sign
E = exponent
M = mantissa

INTEGER:

Selection	Sequence	
	1st	2nd
1 – 0 – 3 – 2 * 3 – 2 – **1 – 0**	Byte 1 (MSB)	Byte 0 (LSB)
0 – 1 – 2 – 3 2 – 3 – **0 – 1**	Byte 0 (LSB)	Byte 1 (MSB)

* = Factory setting
MSB = most significant byte
LSB = least significant byte

STRING:
Illustration using the example of a device parameter with a data length of 18 bytes.

Selection	Sequence				
	1st	2nd	to	17th	18th
1 – 0 – 3 – 2 * 3 – 2 – **1 – 0**	Byte 1	Byte 0 (LSB)	to	Byte 17 (MSB)	Byte 16
0 – 1 – 2 – 3 2 – 3 – **0 – 1**	Byte 0 (LSB)	Byte 1	to	Byte 16	Byte 17 (MSB)

* = Factory setting
MSB = most significant byte
LSB = least significant byte

6.4.6 Modbus error messages

If the Modbus slave detects an error in the request telegram from the master, it sends a reply to the master in the form of an error message consisting of the slave address, function code, exception code and check sum. To indicate that this is an error message, the lead bit of the returned function code is used. The reason for the error is transmitted to the master by means of the exception code.

The following exception codes are supported by the measuring device:

Exception codes	Description
01	ILLEGAL_FUNCTION The function code sent by the master is not supported by the measuring device (slave). ✎ Note! Description of the function codes supported by the measuring device → 🖹 34.
02	ILLEGAL_DATA_ADDRESS The register addressed by the master is not assigned (i.e. it does not exist) or the length of the requested data is too big.
03	ILLEGAL_DATA_VALUE ▪ The master is attempting to write to a register which only allows read access. ▪ The value that appears in the data field is not permitted: e.g. range limits overshot or incorrect data format.
04	SLAVE DEVICE FAILURE The slave did not respond to the request telegram from the master or an error occurred when processing the request telegram.

6.4.7 Modbus auto-scan buffer

Function description

The Modbus master uses the request telegram to access the device parameters (data) of the measuring device. Depending on the function code, the master gains read or write access to a single device parameter or a group of consecutive device parameters. If the desired device parameters (registers) are not available as a group, the master has to send a request telegram to the slave for each parameter.
The measuring device has a special storage area, known as the auto-scan buffer, for grouping nonconsecutive device parameters. This can be used to flexibly group up to 16 device parameters (registers). The master can talk to this complete data block by means of just one request telegram.

Structure of the auto-scan buffer

The auto-scan buffer consists of two data records, the configuration area and the data area. In the configuration area, a list known as the scan list specifies which device parameters should be grouped. For this purpose, the corresponding register address, e.g. the register address 2007 for mass flow, is entered in the scan list. Up to 16 device parameters can be grouped.

The measuring device cyclically reads out the register addresses entered in the scan list and writes the associated device data to the data area (buffer). The request cycle runs automatically. The cycle starts again when the last entry in the scan list has been queried. By means of Modbus, the grouped device parameters in the data area can be read or written by the master with just one request telegram (register address 5051 to 5081).

Configuration of the scan list

During configuration, the Modbus register addresses of the device parameters to be grouped must be entered in the scan list. The scan list can contain up to 16 entries. Float and Integer-type device parameters with read and write access are supported.

The scan list can be configured by means of:

1. The local display or a configuration program (FieldCare).
   The scan list is configured here by means of the function matrix:
   BASIC FUNCTION → Modbus RS485 → SCAN LIST REG. 1 to SCAN LIST REG. 16
2. The Modbus master.
   Here, the scan list is configured via the register addresses 5001 to 5016.

Scan list		
No.	**Modbus configuration Register address (data type = Integer)**	**Configuration via local operation / configuration program (BASIC FUNCTION → Modbus RS485 →)**
1	5001	SCAN LIST REG. 1
2	5002	SCAN LIST REG. 2
3	5003	SCAN LIST REG. 3
4	5004	SCAN LIST REG. 4
5	5005	SCAN LIST REG. 5
6	5006	SCAN LIST REG. 6
7	5007	SCAN LIST REG. 7
8	5008	SCAN LIST REG. 8
9	5009	SCAN LIST REG. 9
10	5010	SCAN LIST REG. 10
11	5011	SCAN LIST REG. 11

Scan list		
No.	Modbus configuration Register address (data type = Integer)	Configuration via local operation / configuration program (BASIC FUNCTION → Modbus RS485 →)
12	5012	SCAN LIST REG. 12
13	5013	SCAN LIST REG. 13
14	5014	SCAN LIST REG. 14
15	5015	SCAN LIST REG. 15
16	5016	SCAN LIST REG. 16

Access to data via Modbus

The Modbus master uses the register addresses 5051 to 5081 to access the data area of the auto-scan buffer. This data area contains the values of the device parameters defined in the scan list. For example, if the register 2007 was entered for mass flow in the scan list by means of the SCAN LIST REG. 1 function, the master can read out the current measured value of the mass flow in register 5051.

Data area				
Parameter value/Measured values		Access via Modbus register address	Data type *	Access**
Value of scan list entry No. 1	→	5051	Integer / Float	Read/Write
Value of scan list entry No. 2	→	5053	Integer / Float	Read/Write
Value of scan list entry No. 3	→	5055	Integer / Float	Read/Write
Value of scan list entry No. 4	→	5057	Integer / Float	Read/Write
Value of scan list entry No. 5	→	5059	Integer / Float	Read/Write
Value of scan list entry No. 6	→	5061	Integer / Float	Read/Write
Value of scan list entry No. 7	→	5063	Integer / Float	Read/Write
Value of scan list entry No. 8	→	5065	Integer / Float	Read/Write
Value of scan list entry No. 9	→	5067	Integer / Float	Read/Write
Value of scan list entry No. 10	→	5069	Integer / Float	Read/Write
Value of scan list entry No. 11	→	5071	Integer / Float	Read/Write
Value of scan list entry No. 12	→	5073	Integer / Float	Read/Write
Value of scan list entry No. 13	→	5075	Integer / Float	Read/Write
Value of scan list entry No. 14	→	5077	Integer / Float	Read/Write
Value of scan list entry No. 15	→	5079	Integer / Float	Read/Write
Value of scan list entry No. 16	→	5081	Integer / Float	Read/Write

* The data type depends on the device parameter entered in the scan list

** The data access depends on the device parameter entered in the scan list. If the device parameter entered supports read and write access, the parameter can also be accessed by means of the data area.

Response time

The response time when accessing the data area (register addresses 5051 to 5081) is typically between 3 and 5 ms.

Note!
It may take longer for a command to be executed in the device. The data is not updated until the command has been executed. Especially write commands are affected by this.

Example

The following device parameters should be grouped via the auto-scan buffer and read out by the master with just one request telegram:
- Mass flow → Register address 2007
- Temperature → Register address 2017
- Totalizer 1 → Register address 2610
- Actual system condition → Register address 6859

1. Configuration of the scan list

- With the local operation or a configuration program (via the function matrix):
  BASIC FUNCTION block → Modbus RS485 function group → SCAN LIST REG. function
  → Entry of the address 2007 under SCAN LIST REG. 1
  → Entry of the address 2017 under SCAN LIST REG. 2
  → Entry of the address 2610 under SCAN LIST REG. 3
  → Entry of the address 6859 under SCAN LIST REG. 4
- Via the Modbus master (the register addresses of the device parameters are written to the registers 5001 to 5004 via Modbus):
  1. Write address 2007 (mass flow) to register 5001
  2. Write address 2017 (temperature) to register 5002
  3. Write address 2610 (totalizer 1) to register 5003
  4. Write address 6859 (actual system condition) to register 5004

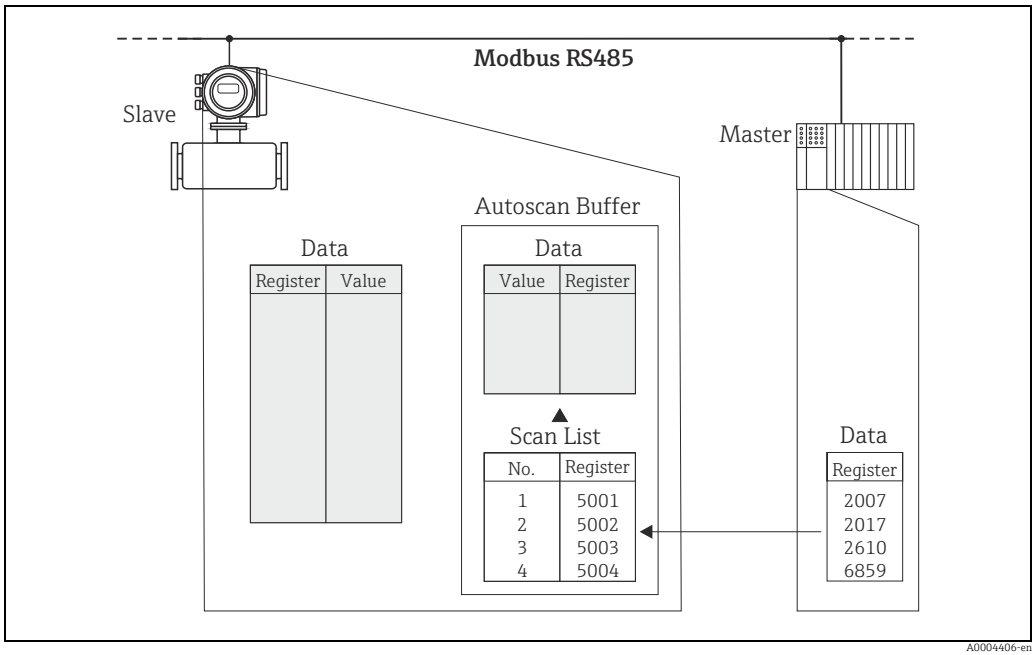

Fig. 24: Configuration of the scan list via the Modbus master

2. Access to data via Modbus

By specifying the register start address 5051 and the number of registers, the Modbus master can read out the measured values with just one request telegram.

Data area			
Access via Modbus register address	**Measuring values**	**Data type**	**Access**
5051	Mass flow = 4567.67	Float	Read
5053	Temperature = 26.5	Float	Read
5055	Totalizer 1 = 56345.6	Float	Read
5057	Actual system condition = 1 (system ok)	Integer	Read

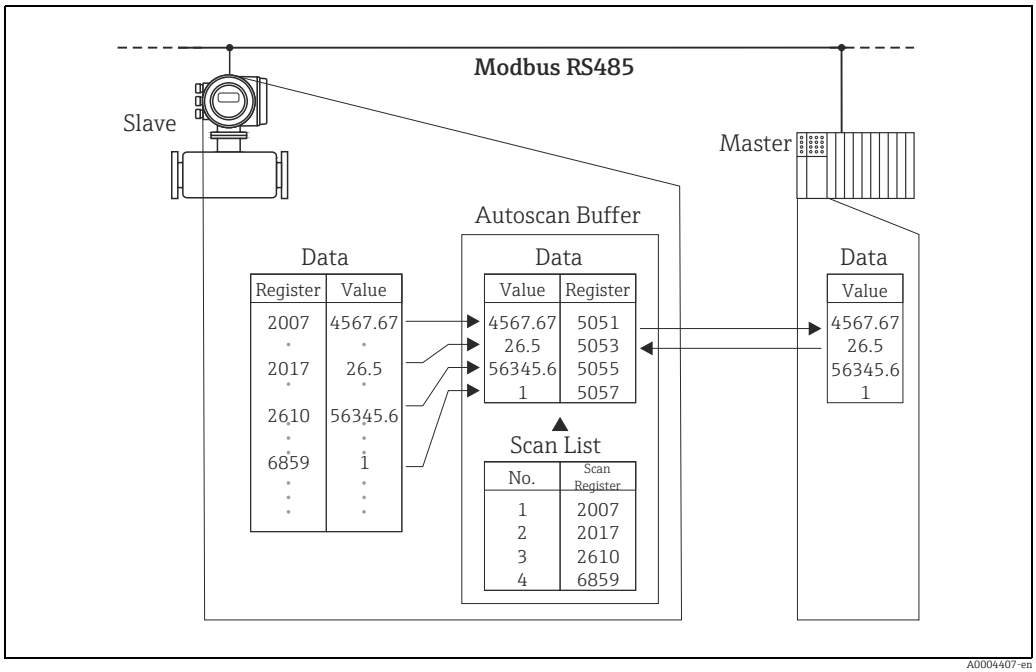

Fig. 25: With just one request telegram, the Modbus master reads out the measured values via the auto-scan buffer of the measuring device.

6.5 Operating options

6.5.1 Operating program "FieldCare"

FieldCare is Endress+Hauser's FDT-based plant asset management tool and allows the configuration and diagnosis of intelligent field devices. By using status information, you also have a simple but effective tool for monitoring devices. The Proline flowmeters are accessed via a service interface or via the service interface FXA193.

6.5.2 Device description files for operating programs

Operation:

Operating program/Device driver:	**How to acquire:**
FieldCare/ DTM	▪ www.endress.com (→Download →Software →Driver) ▪ CD-ROM (Endress+Hauser order number: 56004088)

6.6 Switching hardware write protection on/off

A jumper on the I/O board provides the means of switching hardware write protection on or off. When the write protection is switched on, it is **not** possible to write to the device parameters via Modbus RS485.

Warning!
Risk of electric shock. Exposed components carry dangerous voltages. Make sure that the power supply is switched off before you remove the cover of the electronics compartment.

1. Switch off power supply.
2. Remove the I/O board → 75.
3. Configure the hardware write protection accordingly with the aid of the jumpers (→ 26).
4. Installation is the reverse of the removal procedure.

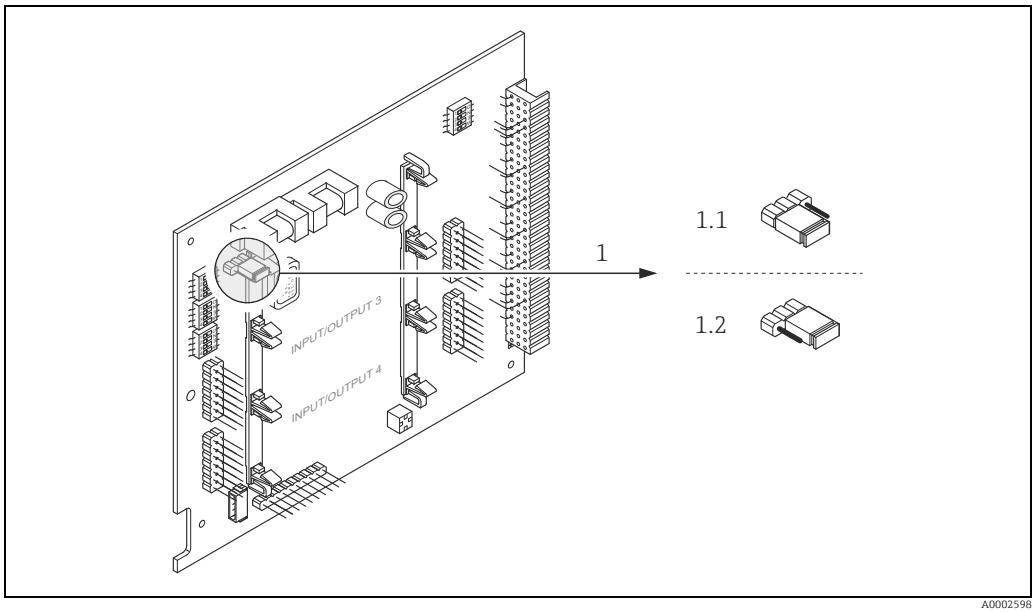

Fig. 26: Switching write protection on and off with the aid of a jumper on the I/O board

1 Jumper for switching write protection on and off
*1.1 Write protection switched on = it is **not** possible to write to the device parameters via Modbus RS485*
1.2 Write protection switched off (factory setting) = it is possible to write to the device parameters via Modbus RS485

7 Commissioning

7.1 Function check

Make sure that all the final checks have been completed before commissioning the measuring point:
- Checklist for "Post-installation check" → 18.
- Checklist for "Post-connection check" → 24.

7.2 Switching on the measuring device

If the post-connection checks have been performed, the supply voltage can be switched on. The device is now operational.
The measuring device performs a number of power on self-tests. As this procedure progresses the following sequence of messages appears on the local display:

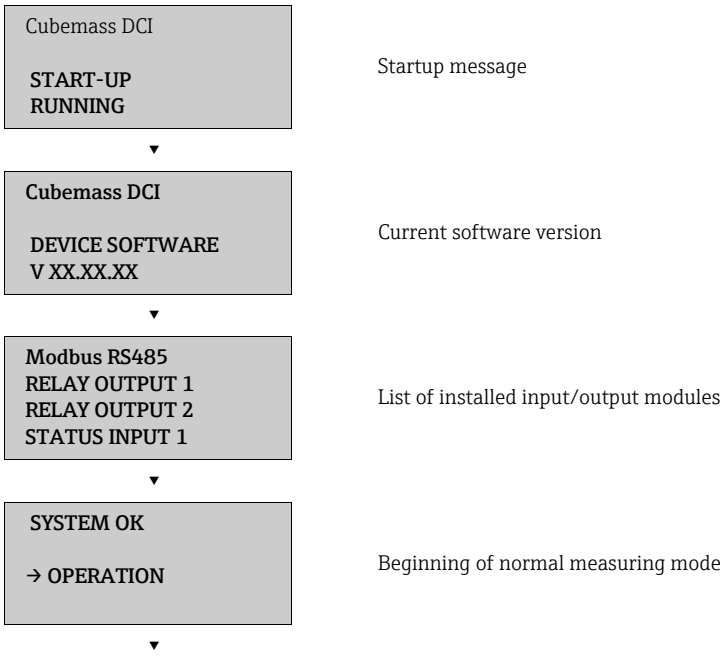

Normal measuring mode commences as soon as startup completes.
Various measured value and/or status variables appear on the display (HOME position).

Note!
If startup fails, an error message indicating the cause is displayed.

7.3 Quick Setup

In the case of measuring devices without a local display, the individual parameters and functions must be configured via the configuration program, e.g. FieldCare. If the measuring device is equipped with a local display, all the important device parameters for standard operation can be configured quickly and easily by means of the "Commissioning" Quick Setup menu.

- Quick Setup "Commissioning", see below
- Quick Setup "Pulsating Flow" → 47
- Quick Setup "Gas measurement"→ 50
- Quick Setup "Communication"→ 50

7.3.1 Quick Setup "Commissioning"

Note!
- The display returns to the function SETUP COMMISSIONING (1002) if you press the key combination during parameter interrogation. The stored parameters remain valid.
- The "COMMISSIONING" Quick Setup must be performed before another Quick Setup is run.

1 The "DELIVERY SETTINGS" option sets every selected unit to the factory setting.
The "ACTUAL SETTING" option accepts the units you previously configured.

2 Only units not yet configured in the current Setup are offered for selection in each cycle. The unit for mass, volume and corrected volume is derived from the corresponding flow unit.

3 The "YES" option remains visible until all the units have been configured.
"NO" is the only option displayed when no further units are available.

4 The prompt only appears if a current and/ or pulse/frequency output is available. Only the outputs not yet configured in the current Setup are offered for selection in each cycle.

5 The "YES" option remains visible until all the outputs have been configured.
"NO" is the only option displayed when no further outputs are available.

6 The "automatic parameterization of the display" option contains the following basic settings/factory settings:

YES Main line = Mass flow
Additional line = Totalizer 1
Information line = Operating/system conditions

NO The existing (selected) settings remain.

7 The process for executing other Quick Setups is described in the following chapters.

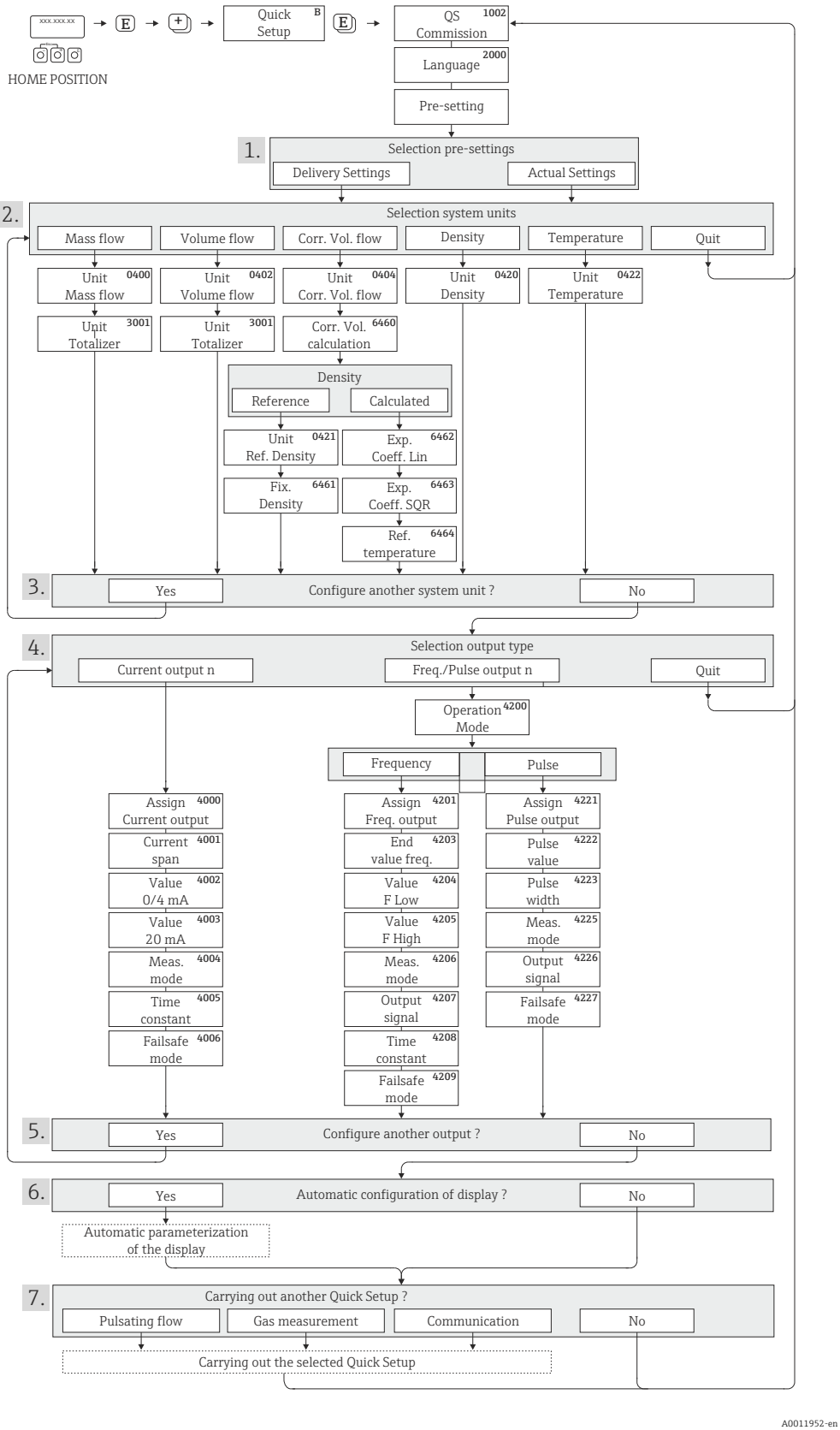

Fig. 27: Quick Setup for quick commissioning

7.3.2 Quick Setup "Pulsating Flow"

Note!
The "Pulsating Flow" Quick Setup is only available if the device has a current output or a pulse/ frequency output.

Certain types of pump such as reciprocating, peristaltic and cam-type pumps, for example, create a flow characterized by severe periodic fluctuations. Negative flows can occur with pumps of these types on account of the closing volume of the valves or valve leaks.

Note!
Before carrying out the Quick Setup "Pulsating Flow", the Quick Setup "Commissioning" has to be executed. → 45

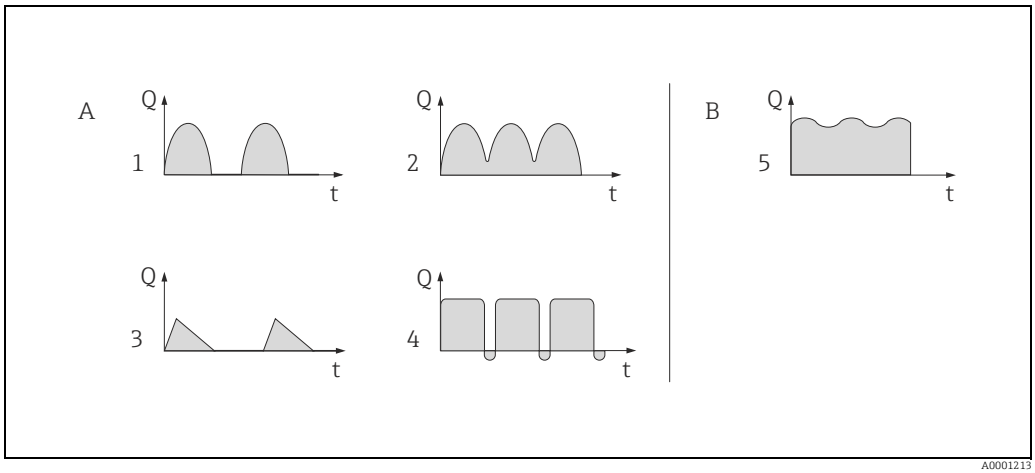

Fig. 28: Flow characteristics of various types of pump

A With severely pulsating flow
B With low pulsating flow

1 1-cylinder cam pump
2 2-cylinder cam pump
3 Magnetic pump
4 Peristaltic pump, flexible connecting hose
5 Multi-cylinder reciprocating pump

Severely pulsating flow

Once several device functions have been configured in the "Pulsating flow" Quick Setup menu, flow fluctuations of this nature can be compensated over the entire flow range and pulsating fluid flows measured correctly. You will find detailed instructions on how to use this Quick Setup in the following section.

Note!
It is always advisable to work through the "Pulsating flow" Quick Setup menu if there is any uncertainty about the exact flow characteristic.

Slightly pulsating flow

If flow fluctuations are no more than minor, as is the case, for example with gear-type, three-cylinder or multi-cylinder pumps, it is **not** absolutely necessary to work through the Quick Setup menu.
In cases of this nature, however, it is advisable to adapt the functions listed below in the function matrix (→ "Description of Device Parameters" manual) to suit local process conditions in order to ensure a stable, unvarying output signal:

- Measuring system damping: "FLOW DAMPING" function. → Increase value
- Current output damping: TIME CONSTANT function → increase the value

Performing the "Pulsating flow" Quick Setup

This Quick Setup menu guides you systematically through the setup procedure for all the device functions that have to be parameterized and configured for measuring pulsating flows. Note that this has no effect on values configured beforehand, such as measuring range, current range or full scale value.

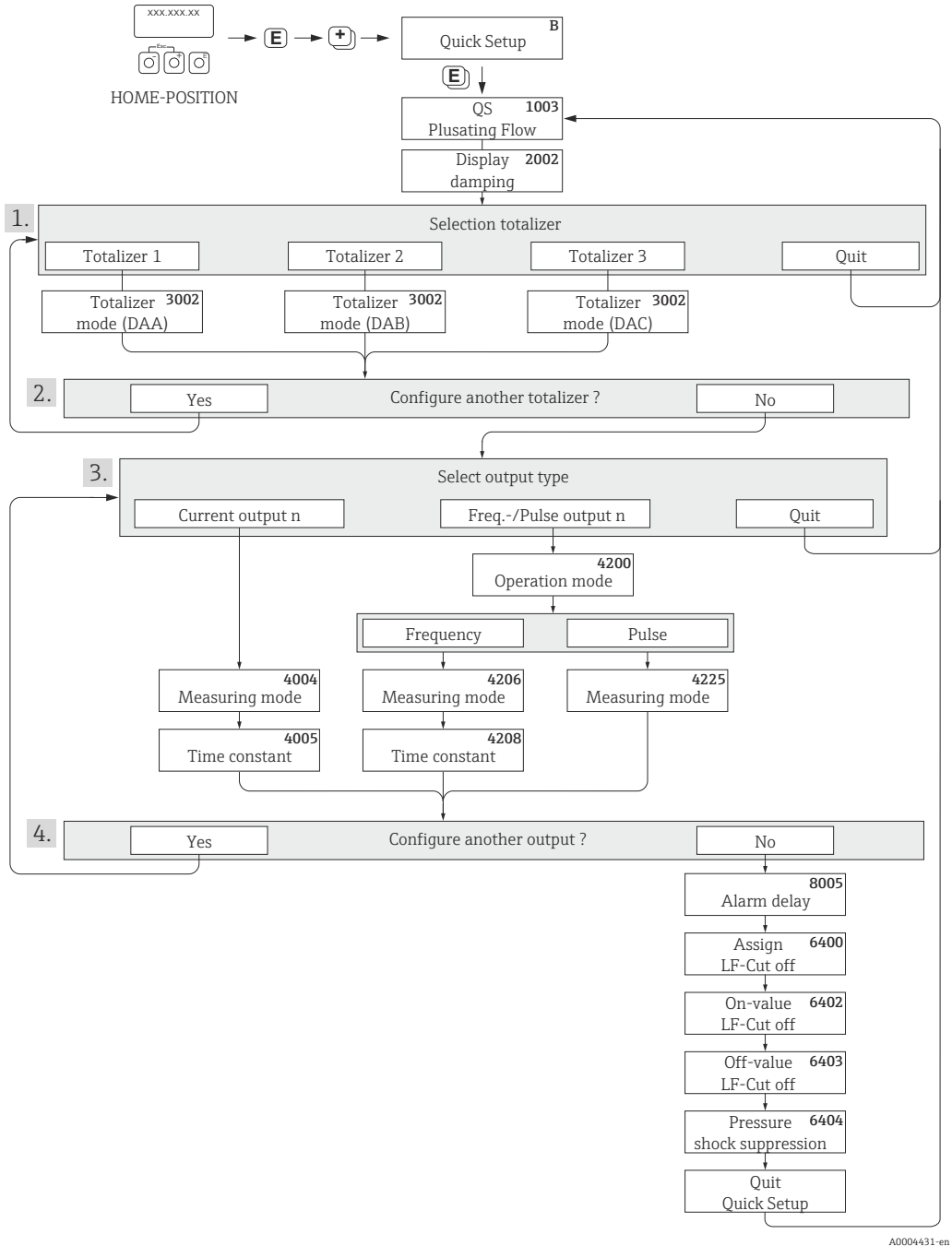

Fig. 29: Quick Setup for measuring severely pulsating flows

1 Only totalizers not yet configured in the current Setup are offered for selection in each cycle.

2 The "YES" option remains visible until all the totalizers have been configured.
"NO" is the only option displayed when no further totalizers are available.

3 Only the output not yet configured in the current Setup is offered for selection in the second cycle.

4 The "YES" option remains visible until both outputs have been configured.
"NO" is the only option displayed when no further outputs are available.

Note!
- The display returns to the function QUICK SETUP PULSATING FLOW (1003) if you press the ⊞⊟ key combination.
- You can call up the Setup menu either directly from the "COMMISSIONING" Quick Setup menu or manually by means of the function QUICK SETUP PULSATING FLOW (1003).

Recommended settings

Quick Setup "Pulsating Flow"		
HOME position → Ⓔ → MEASURED VARIABLE → ⊞ → QUICK SETUP → Ⓔ → QS PULSATING FLOW (1003)		
Function No.	Function name	Selection with ⊞⊟ To next function with Ⓔ
1003	QS PULS. FLOW	YES After Ⓔ is pressed by way of confirmation, the Quick Setup menu calls up all the subsequent functions in succession.

▼

Basic configuration		
2002	DISPLAY DAMPING	1 s
3002	TOTALIZER MODE (DAA)	BALANCE (Totalizer 1)
3002	TOTALIZER MODE (DAB)	BALANCE (Totalizer 2)
3002	TOTALIZER MODE (DAC)	BALANCE (Totalizer 3)
Signal type for "CURRENT OUTPUT"		
4004	MEASURING MODE	PULSATING FLOW
4005	TIME CONSTANT	1 s
Signal type for "FREQ./PULSE OUTPUT" (for FREQUENCY operating mode)		
4206	MEASURING MODE	PULSATING FLOW
4208	TIME CONSTANT	0 s
Signal type for "FREQ./PULSE OUTPUT " (for PULSE operating mode)		
4225	MEASURING MODE	PULSATING FLOW
Other settings		
8005	ALARM DELAY	0 s
6400	ASSIGN LOW FLOW CUTOFF	MASS FLOW
6402	ON-VALUE LOW FLOW CUT OFF	Setting depends on diameter [kg/h]: DN 1 = 0.08 DN 2 = 0.4 DN 4 = 1.8 DN 6 = 4
6403	OFF-VALUE LOW FLOW CUTOFF	50%
6404	PRESSURE SHOCK SUPPRESSION	0 s

▼

Back to the HOME position:
→ Press and hold down Esc key ⊟+⊞ for longer than three seconds or
→ Repeatedly press and release Esc key ⊟+⊞ → Exit the function matrix step by step

7.3.3 Quick Setup "Gas measurement"

The measuring device is primarily designed for measuring liquid flow. The measurement of gases is also possible.

Note!
- Before carrying out the Quick Setup "Gas measurement", the Quick Setup "Commissioning" has to be executed. → 45
- Only mass and Corrected volume flow can be measured and output with the gas measurement mode. Note that direct density and/or volume measurement is not possible.
- If corrected volume flow (e.g. in Nm^3/h) is to be measured and output instead of the mass flow (e.g. in kg/h), change the setting for the CORRECTED VOLUME CALCULATION function to "FIXED REFERENCE DENSITY" in the "Commissioning" Quick Setup menu. Corrected volume flow can be assigned as follows:
  – to a display line,
  – to the current output,
  – to the pulse/frequency output.

7.3.4 Quick Setup "Communication"

To establish serial data transfer, various arrangements between the Modbus master and Modbus slave are required which have to be taken into consideration when configuring various functions. These functions can be configured quickly and easily by means of the "Communication" Quick Setup. The following table explains the parameter configuration options in more detail.

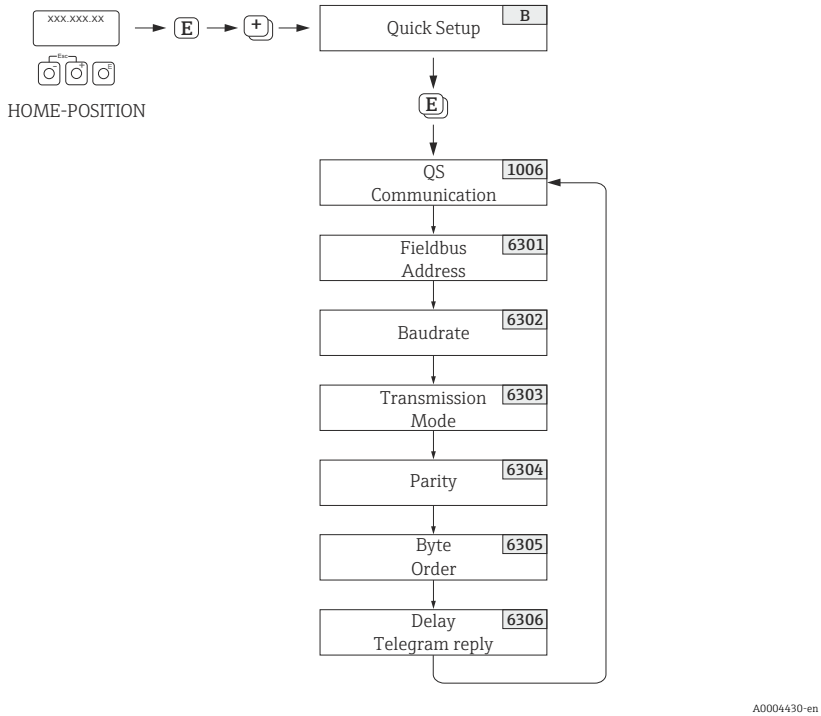

Fig. 30: Quick Setup communication

Quick Setup "Communication"		
HOME position → E → MEASURAND → + → QUICK SETUP → E → QUICK SETUP COMMUNICATION		
Function No.	Function name	Setting to be selected (+ −) (to next function with E)
1006	QUICK SETUP COMMUNICATION	YES → After E is pressed by way of confirmation, the Quick Setup menu calls up all the subsequent functions in succession.

Quick Setup "Communication"		
6301	FIELDBUS ADDRESS	Enter the device address (permitted address range: 1 to 247) **Factory setting:** 247
6302	BAUDRATE	Supported baud rates [BAUD]: 1200/2400/4800/9600/19200/38400/57600/115200 **Factory setting:** 19200 BAUD
6303	MODE DATA TRANSFER	Select the data transfer mode: ▪ ASCII → Data transmission in the form of readable ASCII characters. Error protection via LRC. ▪ RTU → Data transmission in binary form. Error protection via CRC16. **Factory setting:** RTU
6304	PARITY	Selection depends on the "Data transfer mode" function: NONE; EVEN; UNEVEN ▪ Available in the ASCII transfer mode → even or uneven parity bit (EVEN, UNEVEN). ▪ Available in the RTU transfer mode → no parity bit (NONE) or even or uneven parity bit (EVEN, UNEVEN). **Factory setting:** EVEN
6305	BYTE ORDER	Select the byte transmission sequence for the Integer, Float and String data types: 0 - 1 - 2 - 3 3 - 2 - 1 - 0 2 - 3 - 0 - 1 1 - 0 - 3 - 2 **Factory setting:** 1 - 0 - 3 - 2 Note! The transmission sequence must suit the Modbus master.
6306	DELAY TELE. REPLY	For entering a delay time after which the measuring device replies to the request telegram of the Modbus master. This allows communication to be adapted to slow Modbus masters: 0 to 100 ms **Factory setting:** 10 ms
Back to the HOME position: → Press and hold down Esc key □+□ for longer than three seconds or Repeatedly press and release → Esc keys □+□ = Exit the function matrix step by step		

Note!
The parameters described in the table can be found in the "Modbus RS485" group of the "BASIC FUNCTION" block in the function matrix (→ "Description of Device Parameters" manual).

7.3.5 Data back-up/transfer

You can use the T-DAT SAVE/LOAD function to transfer data (device parameters and settings) between the T-DAT (removable memory) and the EEPROM (device memory).

This is required for the following applications:
- Creating a backup: current data are transmitted from an EEPROM to the T-DAT.
- Replacing a transmitter: current data are copied from an EEPROM to the T-DAT, then transmitted to the EEPROM of the new transmitter.
- Duplicating data: current data are copied from an EEPROM to the T-DAT, then transmitted to EEPROMs of identical measuring points.

Note!
Installing and removing the T-DAT→ 📖 75.

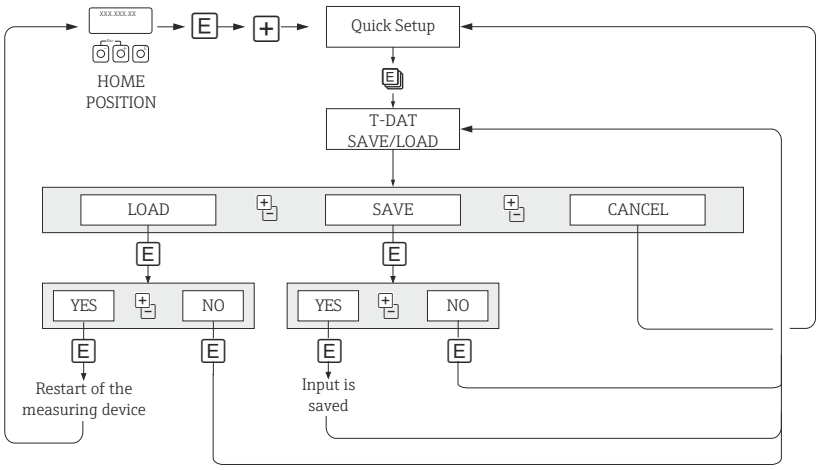

Fig. 31: Data storage/transmission with T-DAT SAVE/LOAD

Notes on the LOAD and SAVE options:

LOAD: Data are transmitted from the T-DAT to the EEPROM.

Note!
- Previously saved settings on the EEPROM are deleted.
- This option is only available if the T-DAT contains valid data.
- This selection can be made only if the software version of the T-DAT is the same or newer than that of the EEPROM. Otherwise, the error message "TRANSM. SW-DAT" appears after the restart and the LOAD function is subsequently no longer available.

SAVE: Data are transmitted from the EEPROM to the T-DAT.

7.4 Configuration

Warning!
In the case of explosion-protected equipment, observe a cooling or discharge time of 10 minutes before opening the device.

7.4.1 Configuring the device address

The device address must always be configured for a Modbus slave. The valid device addresses are in a range from 1 to 247. In a Modbus RS485 network, each address can only be assigned once. If an address is not configured correctly, the device is not recognized by the Modbus master. All measuring devices are delivered from the factory with the device address 247 and with the "software addressing" address mode.

Addressing via local operation

More detailed explanations for addressing the measuring device via the local display → 50

Addressing via miniature switches

Warning!
Risk of electric shock. Exposed components carry dangerous voltages. Make sure that the power supply is switched off before you remove the cover of the electronics compartment.

1. Loosen the Allen screw (3 mm) of the securing clamp.
2. Unscrew cover of the electronics compartment from the transmitter housing.
3. Remove the local display (if present) by loosening the set screws of the display module.
4. Set the position of the miniature switches on the I/O board using a sharp pointed object.
5. Installation is the reverse of the removal procedure.

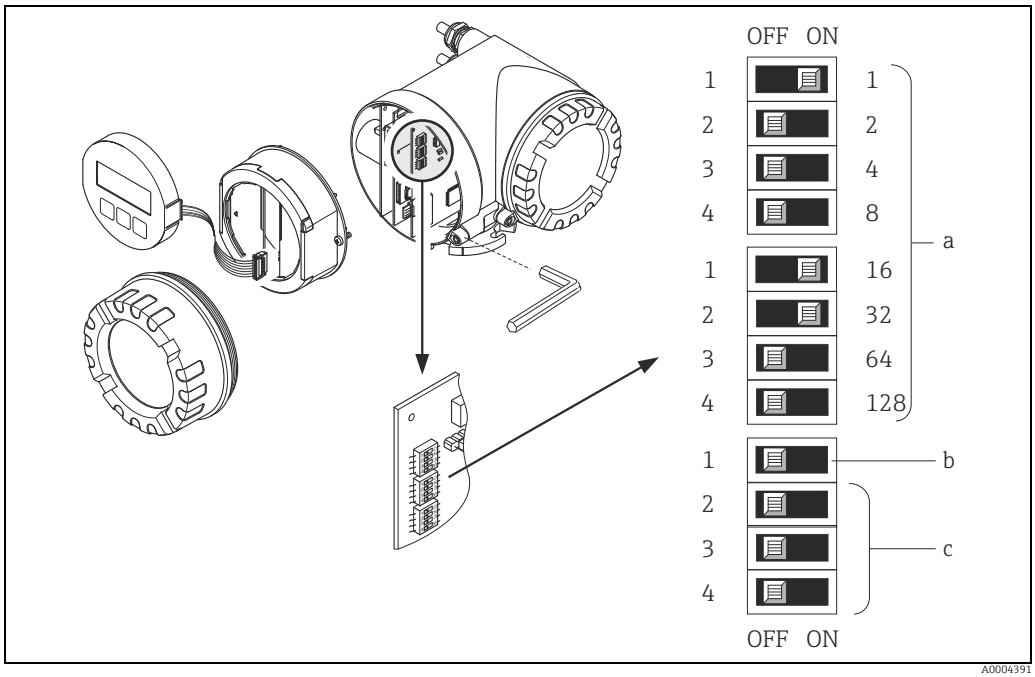

Fig. 32: Addressing with the aid of miniature switches on the I/O board

a Miniature switches for setting the device address (illustrated: 1 + 16 + 32 = device address 49)
b Miniature switches for the address mode (method of addressing)
– OFF = software addressing via local operation (factory setting)
– ON = hardware addressing via miniature switches
c Miniature switches not assigned

7.4.2 Configuring the terminating resistors

It is important to terminate the Modbus RS485 line correctly at the start and end of the bus segment since impedance mismatch results in reflections on the line which can cause faulty communication transmission.

Warning!
Risk of electric shock. Exposed components carry dangerous voltages. Make sure that the power supply is switched off before you remove the cover of the electronics compartment.

The miniature switch for termination is located on the I/O board (→ 33):

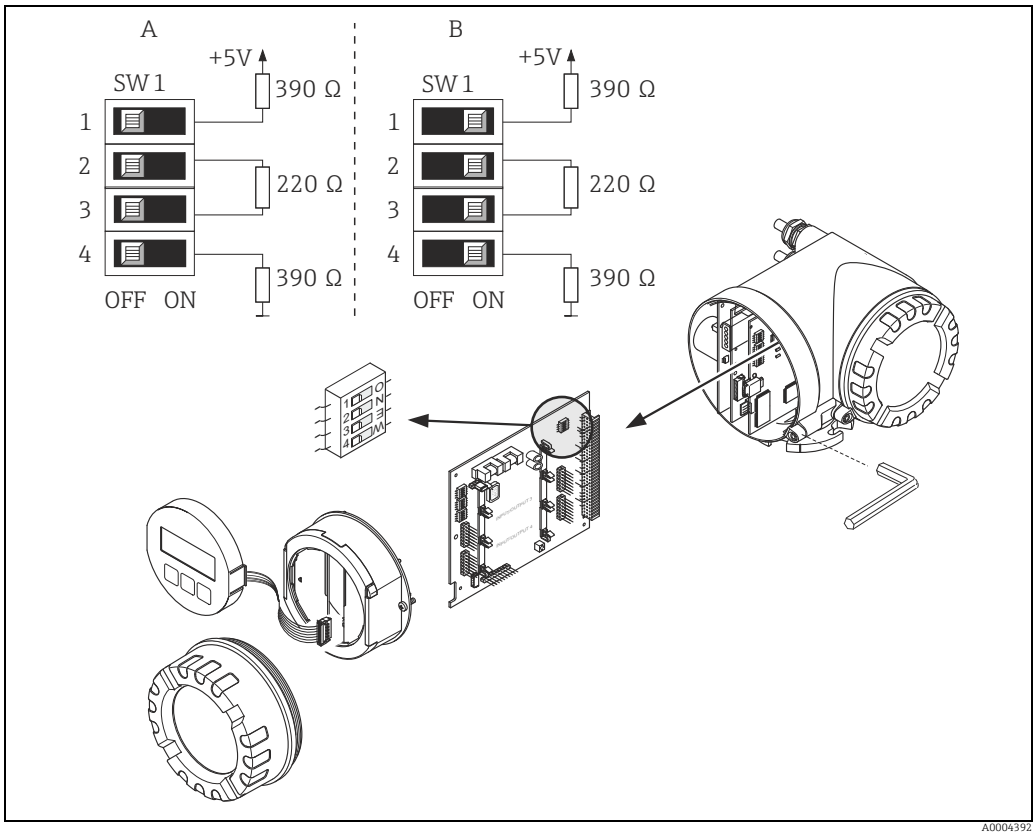

Fig. 33: Configuring the terminating resistors

A = Factory setting
B = Setting at the last transmitter

Note!
It is generally recommended to use external termination since if a device that is terminated internally is defect, this can result in the failure of the entire segment.

7.4.3 Current output: active/passive

The current output is configured as "active" or "passive" by means of various jumpers on the current submodule.

⚠ Warning!
Risk of electric shock. Exposed components carry dangerous voltages. Make sure that the power supply is switched off before you remove the cover of the electronics compartment.

1. Switch off power supply.
2. Remove the I/O board → 📄 75.
3. Set the jumpers (→ 🔲 34).

   ☝ Caution!
   Risk of destroying the measuring device. Set the jumpers exactly as shown in → 🔲 34. Incorrectly set jumpers can cause overcurrents that would destroy either the measuring device or external devices connected to it.
4. Installation of the I/O board is the reverse of the removal procedure.

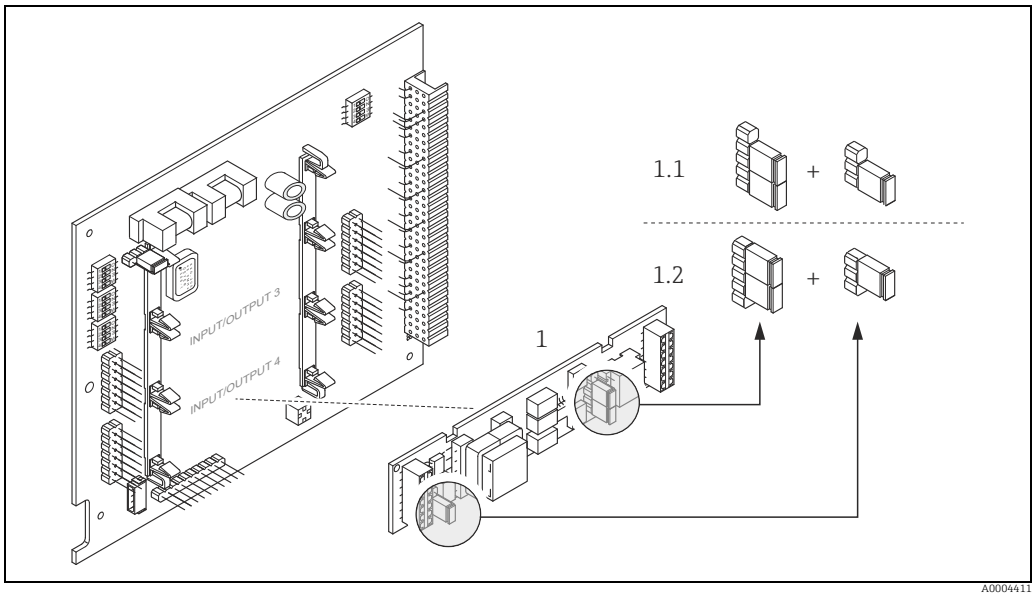

Fig. 34: Configuring current output with the aid of jumpers (I/O board)

1 Current output
1.1 Active current output (default)
1.2 Passive current output

7.4.4 Pulse/frequency output

The configuration of the pulse/frequency output with line monitoring "On" or "Off" takes place by means of various jumpers on the pulse/frequency output submodule.

⚠ Warning!
Risk of electric shock. Exposed components carry dangerous voltages. Make sure that the power supply is switched off before you remove the cover of the electronics compartment.

1. Switch off power supply.
2. Remove the I/O board → 🖹 75.
3. Set the jumpers (→ 🖹 35).

   ☝ Caution!
   Risk of destroying the measuring device. Set the jumpers exactly as shown in the diagram. Incorrectly set jumpers can cause overcurrents that would destroy either the measuring device or external devices connected to it.
4. Installation of the I/O board is the reverse of the removal procedure.

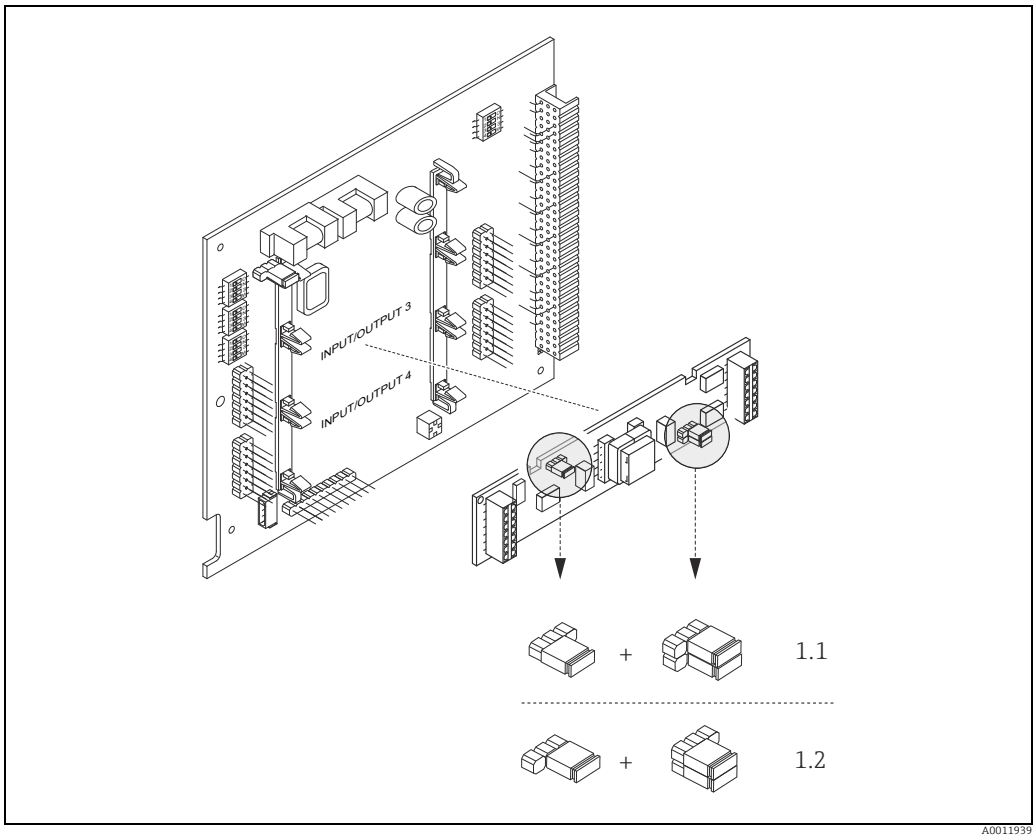

Fig. 35: Configuring pulse/frequency outputs with the aid of jumpers (I/O board)

1 Pulse/frequency output 1
1.1 Line monitoring ON (factory setting)
1.2 Line monitoring OFF

7.4.5 Relay contacts: Normally closed/Normally open

The relay contact can be configured as normally open (NO or make) or normally closed (NC or break) contacts by means of two jumpers on the pluggable submodule. This configuration can be called up at any time with the ACTUAL STATUS RELAY (4740) function.

Warning!
Risk of electric shock. Exposed components carry dangerous voltages. Make sure that the power supply is switched off before you remove the cover of the electronics compartment.

1. Switch off power supply.
2. Remove the I/O board → 75.
3. Set the jumpers (→ 36).

   Caution!
   If you change the setting you must always change the positions of **both** jumpers. Note precisely the specified positions of the jumpers.
4. Installation of the I/O board is the reverse of the removal procedure.

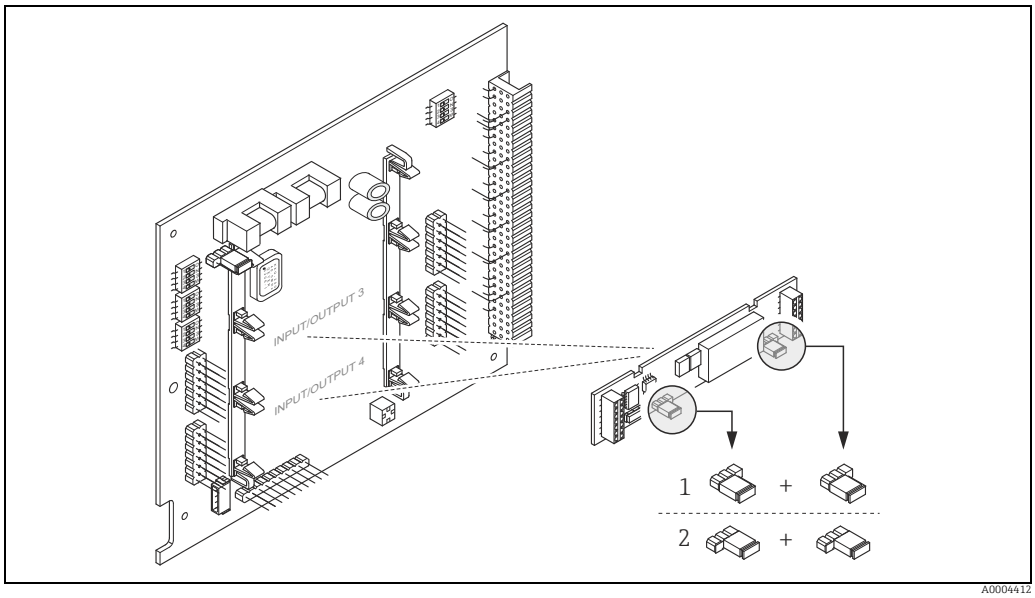

Fig. 36: Configuring relay contacts (NC / NO) using jumpers on the convertible I/O board (submodule).

1 Configured as NO contact (default, relay 1)
2 Configured as NC contact (default, relay 2)

7.5 Adjustment

7.5.1 Zero point adjustment

All measuring devices are calibrated with state-of-the-art technology. Calibration takes place under reference operating conditions → 🖹 83. Consequently zero point adjustment is generally **not** necessary.

Experience shows that the zero point adjustment is advisable only in special cases:
- To achieve highest measuring accuracy also with very small flow rates.
- Under extreme process or operating conditions (e.g. very high process temperatures).

Preconditions for a zero point adjustment

Note the following before you perform a zero point adjustment:
- Adjustment can only be performed on homogeneous fluids.
- Zero point adjustment is performed at zero flow (v = 0 m/s). This can be achieved, for example, with shutoff valves upstream and/or downstream of the sensor or by using existing valves and gates.
  - Normal operation → valves 1 and 2 open
  - Zero point adjustment **with** pump pressure → Valve 1 open / valve 2 closed
  - Zero point adjustment **without** pump pressure → Valve 1 closed / valve 2 open

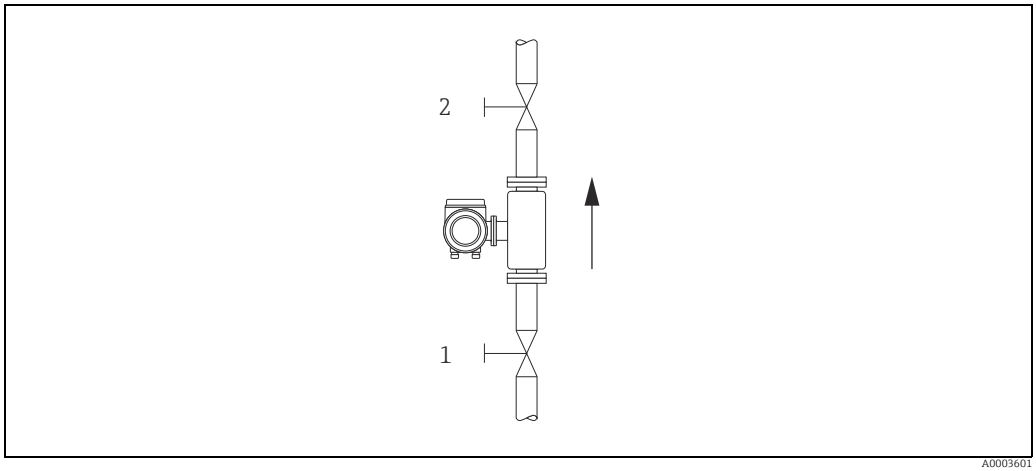

Fig. 37: Zero point adjustment and shutoff valves

Caution!
- The currently valid zero point value can be viewed using the "ZEROPOINT" function (→ "Description of Device Parameters" manual).

Performing a zero point adjustment

1. Operate the system until operating conditions have settled.
2. Stop the flow (v = 0 m/s).
3. Check the shutoff valves for leaks.
4. Check that operating pressure is correct.
5. Using the local display, select the ZEROPOINT ADJUSTMENT function in the function matrix: BASIC FUNCTIONS → PROCESSPARAMETER → ADJUSTMENT → ZERO POINT ADJUSTMENT
6. When you press ⊞ or ⊟ you are automatically prompted to enter the access code if the function matrix is still disabled. Enter the code (factory setting = 84).

7. Use ⊞ or ⊟ to select START and confirm with Ⓔ.
   Select YES at the prompt and press Ⓔ again to confirm.
   Zero point adjustment now starts.
   – The message "ZEROPOINT ADJUST RUNNING" appears on the display for 30 to 60 seconds while adjustment is in progress.
   – If the flow in the pipe exceeds 0.1 m/s, the following error message appears on the display: "ZERO ADJUST NOT POSSIBLE".
   – When the zero point adjustment completes, the "ZERO ADJUST." function reappears on the display.
8. Back to the HOME position:
   – Press and hold down Esc key (⊟ + ⊞) for longer than three seconds or
   – Repeatedly press and release the Esc key (⊟ + ⊞).

7.5.2 Density adjustment

It is always advisable to perform density adjustment when optimum measuring accuracy is required for calculating density-dependent values. 1-point or 2-point density adjustment is required depending on application conditions:

1-point density adjustment (with one fluid):
This type of density adjustment is necessary under the following conditions:
- The sensor does not exactly measure the density value which the operator expects based on laboratory trials.
- The fluid properties are outside the measuring points set at the factory, or the reference conditions used to calibrate the measuring device.
- The plant is used solely for measuring a fluid whose density is to be determined very accurately under constant conditions.
  Example: Brix density measurement for apple juice

2-point density adjustment (with two fluids):
This type of adjustment is always to be carried out if the measuring tubes have been mechanically altered by material buildup, abrasion or corrosion for example. In such cases, the resonance frequency of the measuring tubes has been affected by these factors and is no longer compatible with the calibration data determined at the factory. The 2-point density adjustment takes these mechanical changes into account and calculates new, adjusted calibration data.

Performing 1-point or 2-point density adjustment



Caution!
- Onsite density adjustment can be performed only if the user has detailed knowledge of the fluid density, obtained, for example, from detailed laboratory analyses.
- The target density value specified in this way must not deviate from the measured fluid density by more than ±10%.
- An error when entering the target density affects all calculated density and volume functions.
- 2-point density adjustment is only possible if the two target density values differ by at least 0.2 kg/l. Otherwise error message #731 (adjustment not possible) appears on the display.
- Density adjustment changes the density calibration values set at the factory or by the service technician.
- The functions outlined in the following instructions are described in detail in the "Description of Device Parameters" manual.

1. Fill the sensor with fluid. Make sure that the measuring tubes are completely filled and that the fluid is free from gas bubbles.
2. Wait until the temperature difference between the fluid and measuring tube has equalized. The time you have to wait for equalization depends on the fluid and the current temperature level.
3. Using the local display, select the SETPOINT DENSITY function in the function matrix and perform density adjustment as follows:

Function No.	Function name	Setting to be selected (⊞ or ⊟) (to next function with Ⓔ)
6482	SETPOINT DENSITY	Use ⊞⊟ to select whether 1- or 2-point density adjustment is to be performed. ✎ Note! When you press ⊞⊟ you are automatically prompted to enter the access code if the function matrix is still disabled. Enter the code.
6483	DENSITY SET VAL 1	Use ⊞⊟ to enter the target density of the first fluid and press Ⓔ to save this value (input range = current density value ±10%).
6484	MEASURE FLUID 1	Use ⊞⊟ to select START and press Ⓔ. The message "DENSITY MEASUREMENT RUNNING" appears on the display for approximately 10 seconds. During this time Cubemass DCI measures the current density of the first fluid (actual density value).

▼

For 2-point density adjustment only:

6485	DENSITY SET VAL 2	Use ⊞⊟ to enter the target density of the second fluid and press Ⓔ to save this value (input range = actual density value ±10%).
6486	MEASURE FLUID 2	Use ⊞⊟ to select START and press Ⓔ. The message "DENSITY MEASUREMENT RUNNING" appears on the display for approximately 10 seconds. During this time Cubemass DCI measures the current density of the second fluid (actual density value).

▼

6487	DENSITY ADJUST	Use ⊞⊟ to select DENSITY ADJUST and press Ⓔ. The measuring device compares the current density value and the target density value and calculates the new density coefficients.
6488	RESTORE ORIGINAL	If density adjustment does not run correctly, you can select the RESTORE ORIGINAL function to reactivate the default density coefficients.

▼

Back to the HOME position:
→ Press and hold down Esc key (⊟ + ⊞) for longer than three seconds or
→ Repeatedly press and release Esc key (⊟ + ⊞) → Exit the function matrix step by step

7.6 Purge and pressure monitoring connections

The sensor housing protects the inner electronics and mechanics and is filled with dry nitrogen. Furthermore, it also has an additional secondary containment function up to a specific measuring pressure.



Warning!
For process pressures above the specified containment pressure, the housing does not provide an additional secondary containment function. If there is a danger of the measuring tube rupturing due to process characteristics, e.g. in the event of corrosive process fluids, we recommend the use of sensors whose housings are equipped with special pressure monitoring connections (ordering option). With the help of these connections, fluid collected in the housing in the event of a tube rupture can be drained off. This reduces the risk of mechanical overload of the housing, which could lead to a housing failure and is thus associated with increased potential danger. The connections can also be used for gas purging (gas detection).
If measuring gases with high pressures, in particular, we recommend the use of sensors whose housings are fitted with a rupture element. Users can choose from a rupture disk with defined or undefined fluid exit. The burst pressure is between 10 and 15 bar (145 to 218 psi) for both options.

Note the following when working with purge and pressure monitoring connections:
- Do not open the purge connections unless the containment can be filled with a dry inert gas immediately afterwards.
- Use only low overpressure to purge. Maximum pressure 5 bar (72.5 psi).

7.7 Memory (HistoROM)

At Endress+Hauser, the term HistoROM refers to various types of data storage modules on which process and measuring device data are stored. By unplugging and plugging such modules, device configurations can be duplicated onto other measuring devices, to cite just one example.

7.7.1 HistoROM/S-DAT (sensor-DAT)

The S-DAT is an exchangeable data storage device in which all sensor relevant parameters are stored, i.e., diameter, serial number, calibration factor, zero point.

7.7.2 HistoROM/T-DAT (transmitter-DAT)

The T-DAT is an exchangeable data storage device in which all transmitter parameters and settings are stored.
Storing of specific parameter settings from the EEPROM to the T-DAT and vice versa has to be carried out by the user (= manual save function). Detailed instructions regarding this can be found in the manual "Description of Device Parameters", GP004D/06, ("T-DAT SAVE/ LOAD" function, no. 1009).

8 Maintenance

No special maintenance work is required.

8.1 External cleaning

When cleaning the exterior of measuring devices, always use cleaning agents that do not attack the surface of the housing and the seals.

9 Accessories

Various accessories, which can be ordered with the device or subsequently from Endress+Hauser, are available for the device. Detailed information on the order code in question is available from your local Endress+Hauser sales center or on the product page of the Endress+Hauser website: www.endress.com.

9.1 Device-specific accessories

9.1.1 For the Transmitter

Accessories	Description
Mounting set for transmitter	Mounting set for wall-mount housing (remote version). Suitable for: ▪ Wall mounting ▪ Pipe mounting ▪ Installation in control panel Mounting set for aluminum field housing: Suitable for pipe mounting (¾" to 3")

9.1.2 For the Sensor

Accessories	Description
Mounting set for sensor	Mounting set, comprising: – 2 process connections – Seals
Mounting plate for sensor	Mounting plate, comprising: – mounting plate – 4 × M5

9.2 Service-specific accessories

Accessories	Description
Applicator	Software for selecting and sizing Endress+Hauser measuring devices: ▪ Calculation of all the necessary data for identifying the optimum flowmeter: e.g. nominal diameter, pressure loss, accuracy or process connections ▪ Graphic illustration of the calculation results Administration, documentation and access to all project-related data and parameters over the entire life cycle of a project. Applicator is available: ▪ Via the Internet: https://wapps.endress.com/applicator ▪ On CD-ROM for local PC installation
W@M	Life cycle management for your plant. W@M supports you with a wide range of software applications over the entire process: from planning and procurement, to the installation, commissioning and operation of the measuring devices. All the relevant device information, such as the device status, spare parts and device-specific documentation, is available for every device over the entire life cycle. The application already contains the data of your Endress+Hauser device. Endress+Hauser also takes care of maintaining and updating the data records. W@M is available: ▪ Via the Internet: www.endress.com/lifecyclemanagement ▪ On CD-ROM for local PC installation

Accessories	Description
FieldCare	FieldCare is Endress+Hauser's FDT-based plant asset management tool and allows the configuration and diagnosis of intelligent field devices. By using status information, you also have a simple but effective tool for monitoring devices. The Proline flowmeters are accessed via a service interface or via the service interface FXA193.
FXA291	Service interface from the measuring device to the PC for operation via FieldCare.

9.3 System components

Accessories	Description
Memograph M graphic display recorder	The Memograph M graphic display recorder provides information on all the relevant process variables. Measured values are recorded correctly, limit values are monitored and measuring points analyzed. The data are stored in the 256 MB internal memory and also on a DSD card or USB stick. Memograph M boasts a modular design, intuitive operation and a comprehensive security concept. The ReadWin® 2000 PC software is part of the standard package and is used for configuring, visualizing and archiving the data captured. The mathematics channels which are optionally available enable continuous monitoring of specific power consumption, boiler efficiency and other parameters which are important for efficient energy management.

10 Troubleshooting

10.1 Troubleshooting instructions

Always start troubleshooting with the following checklist if faults occur after commissioning or during operation. The routine takes you directly to the cause of the problem and the appropriate remedial measures.

Check the display	
No display visible and no output signals present.	1. Check the supply voltage → Terminal 1, 2 2. Check device fuse → 🖹 79 85 to 253 V AC: 0.8 A slow-blow / 250 V 20 to 55 V AC and 16 to 62 V DC: 2 A slow-blow / 250 V 3. Measuring electronics defective → order spare parts → 🖹 74.
No display visible, but output signals are present.	1. Check whether the ribbon-cable connector of the display module is correctly plugged into the amplifier board → 🖹 74. 2. Display module defective → order spare parts → 🖹 74 3. Measuring electronics defective → order spare parts → 🖹 74
Display texts are in a foreign language.	Switch off power supply. Press and hold down both the ± keys and switch on the measuring device. The display text will appear in English (default) and is displayed at maximum contrast.
Measured value indicated, but no signal at the current or pulse output	Measuring electronics defective → order spare parts → 🖹 74
▼	
Error messages on display	
Errors that occur during commissioning or measuring are displayed immediately. Error messages consist of a variety of icons. The meanings of these icons are as follows (example): – Type of error: **S** = System error, **P** = Process error – Error message type: ϟ = Fault message, **!** = Notice message – **FLUID INHOM.** = Error designation (e.g. fluid is not homogeneous) – **03:00:05** = Duration of error occurrence (in hours, minutes and seconds) – **#702** = Error number ☝ Caution! See the information on → 🖹 30.	
Error number: No. 001 - 399 No. 501 - 699	System error (device error) has occurred → 🖹 66
Error number: No. 400 - 499 No. 700 - 799	Process error (application error) has occurred → 🖹 71
▼	
Other error (without error message)	
Some other error has occurred.	Diagnosis and rectification → 🖹 72

10.2 System error messages

Serious system errors are **always** recognized by the device as "Fault message", and are shown as a lightning flash (ϟ) on the display! Fault messages immediately affect the outputs. Simulations and positive zero return, on the other hand, are classed and displayed as "Notice messages".

Caution!
In the event of a serious fault, a flowmeter might have to be returned to the manufacturer for repair. Procedures must be carried out before you return a flowmeter to Endress+Hauser for repair or calibration → 🖹 5, → 🖹 80.

Note!
- The listed error message types below correspond to the factory setting.
- See also the information on → 🖹 30.

Modbus **Register: 6859 Data type: Integer**	**Register: 6821 Data type: String (18 byte)**	**No.**	**Device status message (local display)**	**Cause**	**Remedy / spare part**
Response to a fault message: The value "NaN" (not a number) is transmitted to the Modbus master instead of the current measured value.			**Depicted on the local display:** S = System error ϟ = Fault message (with an effect on the outputs) ! = Notice message (without any effect on the outputs)		
1	SYSTEM OK	–	*There is no error present in the device*		
No. # 0xx → Hardware error					
2	CRITICAL FAIL.	**001**	S: CRITICAL FAILURE ϟ: # 001	Serious device error.	Replace the amplifier board.
3	AMP HW EEPROM	**011**	S: AMP HW EEPROM ϟ: # 011	Amplifier: Defective EEPROM.	Replace the amplifier board.
4	AMP SW EEPROM	**012**	S: AMP SW EEPROM ϟ: # 012	Amplifier: Error accessing EEPROM data.	The EEPROM data blocks in which an error has occurred are displayed in the "TROUBLESHOOTING" function. Press ENTER to acknowledge the errors in question; default values are automatically inserted instead of the erroneous parameter values. Note! The measuring device has to be restarted if an error has occurred in a totalizer block (→ also error No. 111 / CHECKSUM TOTAL.).
11	SENSOR HW DAT	**031**	S: SENSOR HW DAT ϟ: # 031	Sensor DAT: 1. S-DAT is defective. 2. S-DAT is not plugged into the amplifier board or is missing.	1. Replace the S-DAT. Check the spare part set number to ensure that the new, replacement DAT is compatible with the measuring electronics. 2. Plug the S-DAT into the amplifier board.

Modbus Register: 6859 Data type: Integer	Modbus Register: 6821 Data type: String (18 byte)	No.	Device status message (local display)	Cause	Remedy / spare part
12	SENSOR SW DAT	**032**	S: SENSOR SW DAT ϟ: # 032	Sensor DAT: Error accessing the calibration values stored in the S-DAT.	1. Check whether the S-DAT is correctly plugged into the amplifier board. 2. Replace the S-DAT if it is defective. Before replacing the DAT, check that the new, replacement DAT is compatible with the measuring electronics. Check the: – Spare part set number – Hardware revision code 3. Replace measuring electronics boards if necessary.
13	TRANSM. HW-DAT	**041**	S: TRANSM. HW DAT ϟ: # 041	Transmitter DAT: 1. T-DAT is defective. 2. T-DAT is not plugged into the amplifier board or is missing.	1. Replace the T-DAT. Check the spare part set number to ensure that the new, replacement DAT is compatible with the measuring electronics. 2. Plug the T-DAT into the amplifier board.
14	TRANSM. SW-DAT	**042**	S: TRANSM. SW DAT ϟ: # 042	Transmitter DAT: Error accessing the adjustment values stored in the T-DAT.	1. Check whether the T-DAT is correctly plugged into the amplifier board. 2. Replace the T-DAT if it is defective. Before replacing the DAT, check that the new, replacement DAT is compatible with the measuring electronics. Check the: – Spare part set number – Hardware revision code 3. Replace measuring electronics boards if necessary.
No. # 1xx → Software error					
143	A/C SW COMPATIB.	**121**	S: A / C COMPATIB. !: # 121	Due to different software versions, I/O board and amplifier board are only partially compatible (possibly restricted functionality). ✎ Note! – This message is only listed in the error history. – Nothing is displayed on the display.	Module with lower software version has either to be updated by FieldCare with the required software version or the module has to be replaced.
No. # 2xx → Error in DAT / no communication					
22	LOAD T-DAT	**205**	S: LOAD T-DAT !: # 205	Transmitter DAT: Data backup (downloading) to T-DAT failed, or error when accessing (uploading) the calibration values stored in the T-DAT.	1. Check whether the T-DAT is correctly plugged into the amplifier board. 2. Replace the T-DAT if it is defective. Before replacing the DAT, check that the new, replacement DAT is compatible with the measuring electronics. Check the: – Spare part set number – Hardware revision code 3. Replace measuring electronics boards if necessary.
23	SAVE T-DAT	**206**	S: SAVE T-DAT !: # 206		
27	COMMUNIC. SENS	**251**	S: COMMUNICATION I/O ϟ: # 251	Internal communication fault on the amplifier board.	Replace the amplifier board.
28	COMMUNIC. I/O	**261**	S: COMMUNICATION I/O ϟ: # 261	No data reception between amplifier and I/O board or faulty internal data transfer.	Check the BUS contacts.

Modbus Register: 6859 Data type: Integer	Modbus Register: 6821 Data type: String (18 byte)	No.	Device status message (local display)	Cause	Remedy / spare part
30	POWER BRK.DWN	**271**	S: POWER BRK. DOWN ϟ: # 271	Power supply interrupted. Error message appears during device startup in custody transfer mode after a power failure.	Confirm with the ENTER key or reset via the auxiliary input (status input).
No. # 3xx → System limits exceeded					
131 to 134	STACK CUR. OUT n	**339 to 342**	S: STACK CUR OUT n ϟ: # 339...342	The temporarily buffered flow portions (measuring mode for pulsating flow) could not be cleared or output within 60 seconds.	1. Change the upper or lower limit setting, as applicable. 2. Increase or reduce flow, as applicable. Recommendation: – Configure the fault response of the output to "ACTUAL VALUE", so that the temporary buffer can be cleared. – Clear the temporary buffer by the measures described under Item 1.
135 to 138	STACK FREQ. OUT n	**343 to 346**	S: STACK FREQ. OUT n ϟ: # 343...346		
139 to 142	STACK PULSE n	**347 to 350**	S: STACK PULSE OUT n ϟ: # 347...350	The temporarily buffered flow portions (measuring mode for pulsating flow) could not be cleared or output within 60 seconds.	1. Increase the setting for pulse weighting. 2. Increase the max. pulse frequency if the totalizer can handle a higher number of pulses. 3. Increase or reduce flow, as applicable. Recommendation: – Configure the fault response of the output to "ACTUAL VALUE", so that the temporary buffer can be cleared. – Clear the temporary buffer by the measures described under Item 1.
39 to 42	RANGE CUR. OUT n	**351 to 354**	S: CURRENT RANGE n !: # 351 to 354	Current output: The actual value for the flow lies outside the set limits.	1. Change the upper or lower limit setting, as applicable. 2. Increase or reduce flow, as applicable.
43 to 46	RANGE FREQ. OUT n	**355 to 358**	S: FREQ. RANGE n !: # 355 to 358	Frequency output: The actual value for the flow lies outside the set limits.	1. Change the upper or lower limit setting, as applicable. 2. Increase or reduce flow, as applicable.
47 to 50	RANGE PULSE n	**359 to 362**	S: PULSE RANGE !: # 359 to 362	Pulse output: Pulse output frequency is out of range.	1. Increase the setting for pulse weighting. 2. When selecting the pulse width, choose a value that can still be processed by a connected counter (e.g. mechanical counter, PLC etc.). *Determine the pulse width:* – Version 1: Enter the minimum duration that a pulse must be present at the connected counter to ensure its registration. – Version 2: Enter the maximum (pulse) frequency as the half "reciprocal value" that a pulse must be present at the connected counter to ensure its registration. Example: The maximum input frequency of the connected counter is 10 Hz. The pulse width to be entered is: $\frac{1}{2 \cdot 10\ \text{Hz}} = 50\ \text{ms}$ A0004437 3. Reduce flow.

Modbus Register: 6859 Data type: Integer	Modbus Register: 6821 Data type: String (18 byte)	No.	Device status message (local display)	Cause	Remedy / spare part
52 to 53	LOW FREQ. LIM.	**379**	S: LOW FREQ. LIM ϟ: # 379	The measuring tube oscillation frequency is outside the permitted range. Causes: – Measuring tube damaged – Sensor defective or damaged	Contact your Endress+Hauser service organization.
53	UPPER FREQ. LIM.	**380**	S: UPPER FREQ. LIM ϟ: # 380		
54	FLUIDTEMP. MIN.	**381**	S: FLUIDTEMP.MIN. ϟ: # 381	The temperature sensor on the measuring tube is likely defective.	Check the following electrical connections before you contact your Endress+Hauser service organization: – Verify that the sensor signal cable connector is correctly plugged into the amplifier board. – Remote version: Check sensor and transmitter terminal connections No. 9 and 10.
55	FLUIDTEMP. MAX.	**382**	S: FLUIDTEMP.MAX. ϟ: # 382		
56	CARR.TEMP. MIN.	**383**	S: CARR.TEMP.MIN ϟ: # 383	The temperature sensor on the carrier tube is likely defective.	Check the following electrical connections before you contact your Endress+Hauser service organization: – Verify that the sensor signal cable connector is correctly plugged into the amplifier board. – Remote version: Check sensor and transmitter terminal connections No. 11 and 12.
57	CARR.TEMP. MAX.	**384**	S: CARR.TEMP.MAX ϟ: # 384		
58	INL. SENS DEF	**385**	S: INL.SENS.DEF. ϟ: # 385	One of the measuring tube exciter coils (inlet) is likely defective.	Check the following electrical connections before you contact your Endress+Hauser service organization: – Verify that the sensor signal cable connector is correctly plugged into the amplifier board. – Remote version: Check sensor and transmitter terminal connections No. 4, 5, 6 and 7.
59	OUTL. SENS. DEF	**386**	S: OUTL.SENS.DEF. ϟ: # 386	One of the measuring tube exciter coils (outlet) is likely defective.	
60	SEN. ASY. EXCEED	**387**	S: SEN.ASY.EXCEED ϟ: # 387	One of the measuring tube exciter coils is likely defective.	
61 to 62	AMP. FAULT CH2 AMP. FAULT CH3	**388 to 390**	S: AMP. FAULT ϟ: # 388...390	Amplifier error	Contact your Endress+Hauser service organization.
No. # 5xx → Application error					
72	SW-DOWNLOAD	**501**	S: SW.-UPDATE ACT. !: # 501	New amplifier or communication (I/O module) software version is loaded. Currently no other functions are possible.	Wait until process is finished. The device will restart automatically.
73	DOWN-UPLOAD ACTIVE	**502**	S: UP-/DOWNLOAD ACT. !: # 502	Up- or downloading the device data via configuration program. Currently no other functions are possible.	Wait until process is finished.
76	OSC.AMP.LIM	**586**	S: OSC. AMP. LIMIT ϟ: # 586	The fluid properties do not allow a continuation of the measurement. Causes: – Extremely high viscosity – Process fluid is very inhomogeneous (gas or solid content)	Change or improve process conditions.
77	TUBE NOT OSC.	**587**	S: TUBE OSC. NOT ϟ: # 587	Extreme process conditions exist. The measuring system can therefore not be started.	Change or improve process conditions.

Modbus Register: 6859 Data type: Integer	Modbus Register: 6821 Data type: String (18 byte)	No.	Device status message (local display)	Cause	Remedy / spare part
78	GAIN RED.IMPOS	**588**	S: GAIN RED.IMPOS ϟ: # 588	Overdriving of the internal analog to digital converter. Possible causes are cavitation, extreme pressure shock and high flow velocity for gases A continuation of the measurement is no longer possible.	Change or improve process conditions, e.g. by reducing the flow velocity.
No. # 6xx → Simulation mode active					
79	POS.ZERO -RET.	**601**	S: POSITIVE ZERO RETURN !: # 601	Positive zero return active. ☝ Caution! This message has the highest display priority.	Switch off positive zero return.
80 to 83	SIM. CURR. OUT n	**611 to 614**	S: SIM. CURR. OUT. n !: # 611 to 614	Simulation current output active.	Switch off simulation.
84 to 87	SIM FREQ. OUT 1 to 4	**621 to 624**	S: SIM. FREQ. OUT n !: # 621 to 624	Simulation frequency output active.	Switch off simulation.
88 to 91	SIM. PULSE n	**631 to 634**	S: SIM. PULSE n !: # 631 to 634	Simulation pulse output active.	Switch off simulation.
104 to 107	SIM. STATUS IN n	**671 to 674**	S: SIM. STAT. IN n !: # 671 to 674	Simulation status input active.	Switch off simulation.
108	SIM. FAILSAFE	**691**	S: SIM. FAILSAFE ϟ: # 691	Simulation of response to error (outputs) active.	Switch off simulation.
109	SIM MEASURAND	**692**	S: SIM. MEASURAND !: # 692	Simulation of measuring variables (e.g. mass flow).	Switch off simulation.
150	DEV. TEST ACT.	**698**	S: DEV. TEST AKT. !: # 698	The measuring device is being checked on site via the test and simulation device.	-

10.3 Process error messages

Note!
- The listed error message types below correspond to the factory setting.
- See also the information on → 30.

Modbus Register: 6859 Data type: Integer	Modbus Register: 6821 Data type: String (18 byte)	No.	Device status message (local display)	Cause	Remedy / spare part
Response to a fault message: The value "NaN" (not a number) is transmitted to the Modbus master instead of the current measured value.			**Depicted on the local display:** S = System error ϟ = Fault message (with an effect on the outputs) ! = Notice message (without any effect on the outputs)		
1	SYSTEM OK	–	*There is no error present in the device*		
No. # 7xx → Other process errors					
111	EMPTY PIPE	**700**	P: EMPTY PIPE !: # 700	The process fluid density is outside the upper or lower limit values set in the "EPD" function. Causes: – Air in the measuring tube – Partly filled measuring tube	1. Ensure that there is no gas content in the process liquid. 2. Adapt the values in the "EPD RESPONSE TIME" function to the current process conditions.
112	EXC. CURR. LIM	**701**	P: EXC. CURR. LIM !: # 701	The maximum current value for the measuring tube exciter coils has been reached, since certain process fluid characteristics are extreme, e.g. high gas or solid content. The device continues to work correctly.	In particular with outgassing fluids and/or increased gas content, the following measures are recommended to increase system pressure: 1. Install the device at the outlet side of a pump. 2. Install the device at the lowest point of an ascending pipeline. 3. Install a flow restriction, e.g. reducer or orifice plate, downstream from the device.
113	FLUID INHOM.	**702**	P: FLUID INHOM. !: # 702	Frequency control is not stable, due to inhomogeneous process fluid, e.g. gas or solid content.	
114	NOISE LIM. CH0	**703**	P: NOISE LIM. CH0 !: # 703	Overdriving of the internal analog to digital converter. Causes: – Cavitation – Extreme pressure pulses – High gas flow velocity A continuation of the measurement is still possible.	Change or improve process conditions, e.g. by reducing the flow velocity.
115	NOISE LIM. CH1	**704**	P: NOISE LIM. CH1 !: # 704		
116	FLOW LIMIT	**705**	P: FLOW LIMIT ϟ: # 705	The mass flow is too high. The electronics' measuring range will be exceeded.	Reduce flow.
124	ADJ. ZERO FAIL.	**731**	P: ADJ. ZERO FAIL !: # 731	The zero point adjustment is not possible or has been canceled.	Make sure that zero point adjustment is carried out at "zero flow" only (v = 0 m/s).

10.4 Process errors without messages

Symptoms	Rectification
Comment: You may have to change or correct certain settings of the function matrix in order to rectify faults. The functions outlined below, such as DISPLAY DAMPING, are described in detail in the "Description of Device Parameters" manual.	
Measured value reading fluctuates even though flow is steady.	1. Check the fluid for presence of gas bubbles. 2. "TIME CONSTANT" function → increase value (→ OUTPUTS / CURRENT OUTPUT / CONFIGURATION) 3. "DISPLAY DAMPING" function → increase value (→ USER INTERFACE / CONTROL / BASIC CONFIG.)
Flow values are negative, even though the fluid is flowing forwards through the pipe.	Change the "INSTALLATION DIRECTION SENSOR" function accordingly.
Measured-value reading or measured-value output pulsates or fluctuates, e.g. because of reciprocating pump, peristaltic pump, diaphragm pump or pump with similar delivery characteristic.	Run the "Pulsating Flow" Quick Setup → 🖹 47. If the problem persists despite these measures, a pulsation damper will have to be installed between pump and measuring device.
There are differences between the flowmeter's internal totalizer and the external metering device.	This symptom is due primarily to backflow in the piping, because the pulse output cannot subtract in the "STANDARD" or "SYMMETRY" measuring modes. The problem can be solved as follows: Allow for flow in both directions. Set the "MEASURING MODE" function to "PULSATING FLOW" for the pulse output in question.
Measured value reading shown on display, even though the fluid is at a standstill and the measuring tube is full.	1. Check the fluid for presence of gas bubbles. 2. Activate the "ON-VAL. LF-CUTOFF" function, i.e. enter or increase the value for the low flow cut off (→ BASIC FUNCTION / PROCESSPARAMETER / CONFIGURATION).
The error cannot be eliminated or another error pattern is present. In these instances, please contact your Endress+Hauser service organization.	The following solutions are possible: **Request the services of an Endress+Hauser service technician** If you request the services of a service technician, please be ready with the following information: – Brief error description – Nameplate specifications: order code and serial number → 🖹 6 **Return the devices to Endress+Hauser** Procedures must be carried out before you return a flowmeter to Endress+Hauser for repair or calibration → 🖹 5, → 🖹 80. **Replace the transmitter electronics** Parts of the measuring electronics defective → order spare part → 🖹 80

10.5 Response of outputs to errors

Note!
The failsafe mode of totalizers, current, pulse and frequency outputs can be customized by means of various functions in the function matrix. Detailed information → "Description of Device Parameters" manual.

You can use positive zero return to set the signals of the current, pulse and status outputs to their fallback value, for example when measuring has to be interrupted while a pipe is being cleaned. This function takes priority over all other device functions. Simulations, for example, are suppressed.

Failsafe mode of outputs and totalizers		
	Process/system error is present	**Positive zero return is activated**
Caution! System or process errors defined as "Notice messages" have no effect whatsoever on the inputs and outputs. See also the information on → 🖹 30.		
Modbus RS485	In the event of faults, the value "NaN" (not a number) is transmitted instead of the current measured value.	–
Current output	MIN. CURRENT The current output will be set to the lower value of the signal on alarm level depending on the setting selected in the CURRENT SPAN (→ "Description of Device Parameters" manual). MAX. CURRENT The current output will be set to the upper value of the signal on alarm level depending on the setting selected in the CURRENT SPAN (→ "Description of Device Parameters" manual). HOLD VALUE Measured value display on the basis of the last saved value preceding occurrence of the fault. ACTUAL VALUE Measured value display on the basis of the current flow measurement. The fault is ignored.	Output signal corresponds to "zero flow"
Pulse output	FALLBACK VALUE Signal output → no pulses HOLD VALUE Last valid value (preceding occurrence of the fault) is output. ACTUAL VALUE Fault is ignored, i.e. normal measured value output on the basis of ongoing flow measurement.	Output signal corresponds to "zero flow"
Frequency output	FALLBACK VALUE Signal output → 0 Hz FAILSAFE VALUE Output of the frequency specified in the FAILSAFE VALUE function. HOLD VALUE Last valid value (preceding occurrence of the fault) is output. ACTUAL VALUE Fault is ignored, i.e. normal measured value output on the basis of ongoing flow measurement.	Output signal corresponds to "zero flow"
Totalizer	STOP The totalizers are paused until the fault is rectified. ACTUAL VALUE The fault is ignored. The totalizer continues to count in accordance with the current flow value. HOLD VALUE The totalizers continue to count the flow in accordance with the last valid flow value (before the error occurred).	Totalizer stops

10.6 Spare parts

The previous sections contain detailed troubleshooting instructions → 65.
The measuring device, moreover, provides additional support in the form of continuous self-diagnosis and error messages.
Fault rectification can entail replacing defective components with tested spare parts. For an overview of the spare parts that can be delivered → 38.

Note!
Spare parts can be ordered directly from your Endress+Hauser representative by providing the serial number printed on the transmitter's nameplate (→ 6).

Spare parts are shipped as sets comprising the following parts:
- Spare part
- Additional parts, small items (threaded fasteners etc.)
- Mounting instructions
- Packaging

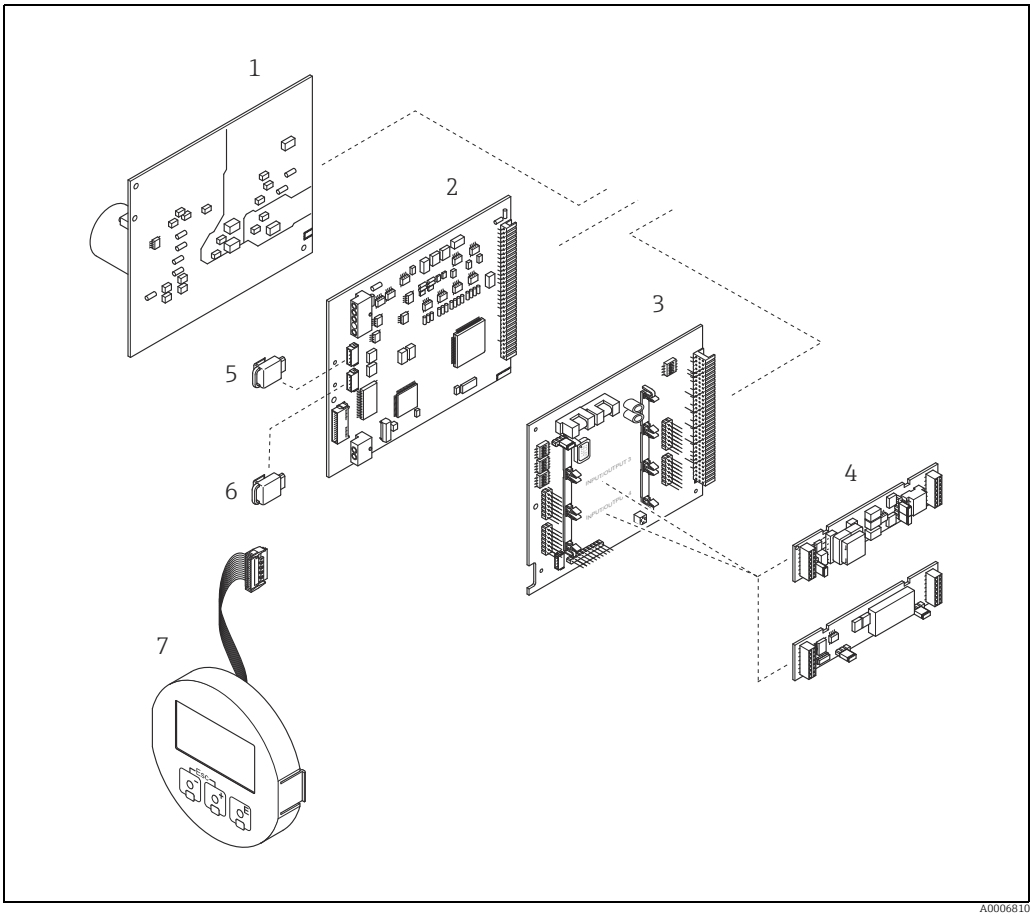

Fig. 38: Spare parts for transmitter (field and wall-mount housings)

1 Power unit board (85 to 253 V AC, 20 to 55 V AC, 16 to 62 V DC)
2 Amplifier board
3 I/O board (COM module)
4 Pluggable input/output submodules
5 S-DAT (sensor data memory)
6 T-DAT (transmitter data memory)
7 Display module

10.6.1 Removing and installing printed circuit boards

Field housing

Warning!
- Risk of electric shock. Exposed components carry dangerous voltages. Make sure that the power supply is switched off before you remove the cover of the electronics compartment.
- Risk of damaging electronic components (ESD protection).
  Static electricity can damage electronic components or impair their operability. Use a workplace with a grounded working surface purposely built for electrostatically sensitive devices.
- If you cannot guarantee that the dielectric strength of the measuring device is maintained in the following steps, then an appropriate inspection must be carried out in accordance with the manufacturer's specifications.

Caution!
Use only original Endress+Hauser parts.

Installing and removing the boards → 39:

1. Unscrew cover of the electronics compartment from the transmitter housing.
2. Remove the local display (1) as follows:
   – Press in the latches (1.1) at the side and remove the display module.
   – Disconnect the ribbon cable (1.2) of the display module from the amplifier board.
3. Remove the screws and remove the cover (2) from the electronics compartment.
4. Remove power unit board (4) and I/O board (6):
   Insert a thin pin into the hole (3) provided for the purpose and pull the board clear of its holder.
5. Remove submodules (6.1) (optional):
   No tools are required for removing the submodules (outputs) from the I/O board. Installation is also a no-tools operation.

   Caution!
   Only certain combinations of submodules on the I/O board are permissible → 22. The individual slots are marked and correspond to certain terminals in the connection compartment of the transmitter:
   – Slot "INPUT / OUTPUT 3" = Terminals 22/23
   – Slot "INPUT / OUTPUT 4" = Terminals 20/21
6. Remove amplifier board (5):
   – Disconnect the plug of the sensor signal cable (5.1) including S-DAT (5.3) from the board.
   – Gently disconnect the plug of the excitation current cable (5.2) from the board, i.e. without moving it back and forward.
   – Insert a thin pin into the hole (3) provided for the purpose and pull the board clear of its holder.
7. Installation is the reverse of the removal procedure.

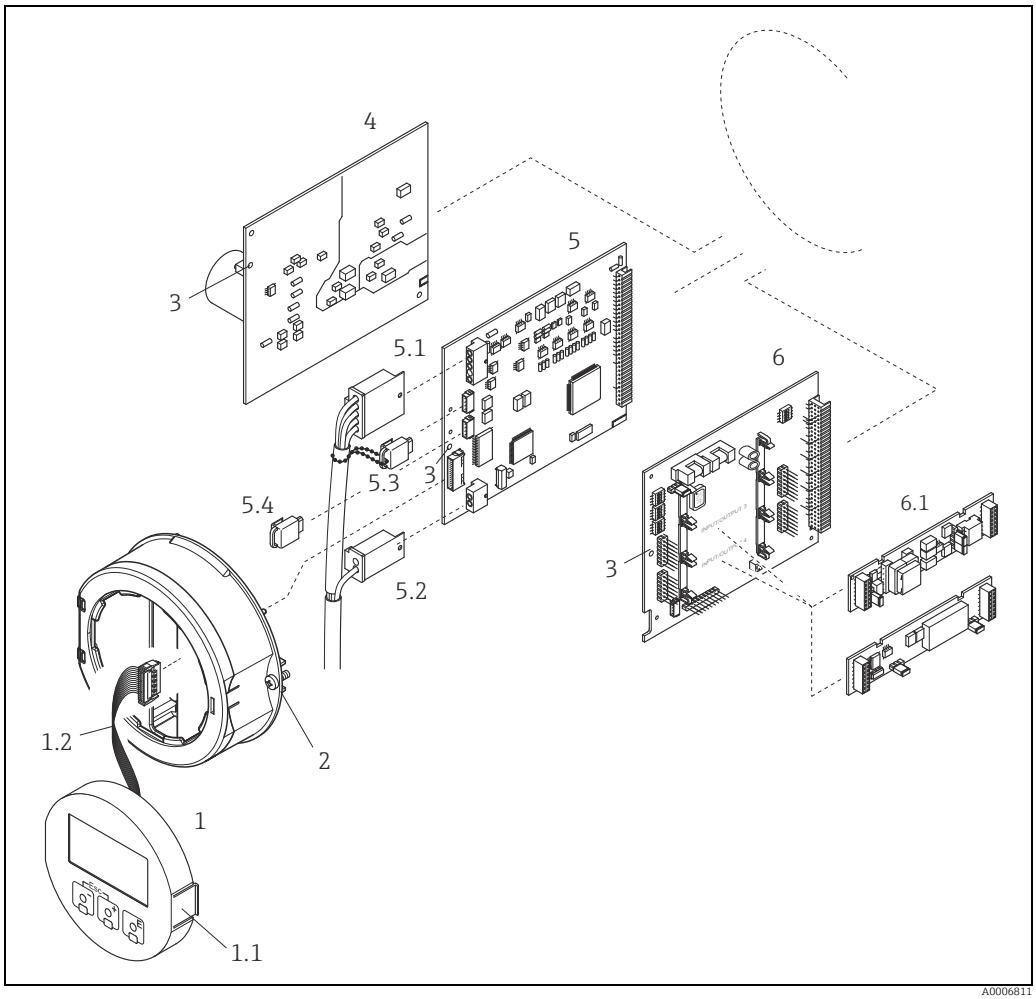

Fig. 39: Field housing: removing and installing printed circuit boards

1 Local display
1.1 Latch
1.2 Ribbon cable (display module)
2 Screws of electronics compartment cover
3 Aperture for installing/removing boards
4 Power unit board
5 Amplifier board
5.1 Signal cable (sensor)
5.2 Excitation current cable (sensor)
5.3 S-DAT (sensor data memory)
5.4 T-DAT (transmitter data memory)
6 I/O board (flexible assignment)
6.1 Optional: pluggable submodules (current output, pulse/frequency output and relay output)

Wall-mount housing

Warning!
- Risk of electric shock. Exposed components carry dangerous voltages. Make sure that the power supply is switched off before you remove the cover of the electronics compartment.
- Risk of damaging electronic components (ESD protection).
  Static electricity can damage electronic components or impair their operability. Use a workplace with a grounded working surface purposely built for electrostatically sensitive devices.
- If you cannot guarantee that the dielectric strength of the measuring device is maintained in the following steps, then an appropriate inspection must be carried out in accordance with the manufacturer's specifications.

Caution!
Use only original Endress+Hauser parts.

Installing and removing the boards → 40:

1. Remove the screws and open the hinged cover (1) of the housing.
2. Remove the screws securing the electronics module (2). Then push up electronics module and pull it as far as possible out of the wall-mount housing.
3. Disconnect the following cable plugs from amplifier board (7):
   – Sensor signal cable plug (7.1) including S-DAT (7.3)
   – Unplug excitation current cable (7.2):
     Gently disconnect the plug, i.e. without moving it back and forward.
   – Ribbon cable plug (3) of the display module.
4. Remove the cover (4) from the electronics compartment by loosening the screws.
5. Remove the boards (6, 7, 8):
   Insert a thin pin into the hole (5) provided for the purpose and pull the board clear of its holder.
6. Remove submodules (8.1) (optional):
   No tools are required for removing the submodules (outputs) from the I/O board. Installation is also a no-tools operation.

   Caution!
   Only certain combinations of submodules on the I/O board are permissible → 22. The individual slots are marked and correspond to certain terminals in the connection compartment of the transmitter:

   Slot "INPUT / OUTPUT 2" = Terminals 24/25
   Slot "INPUT / OUTPUT 3" = Terminals 22/23
   Slot "INPUT / OUTPUT 4" = Terminals 20/21
7. Installation is the reverse of the removal procedure.

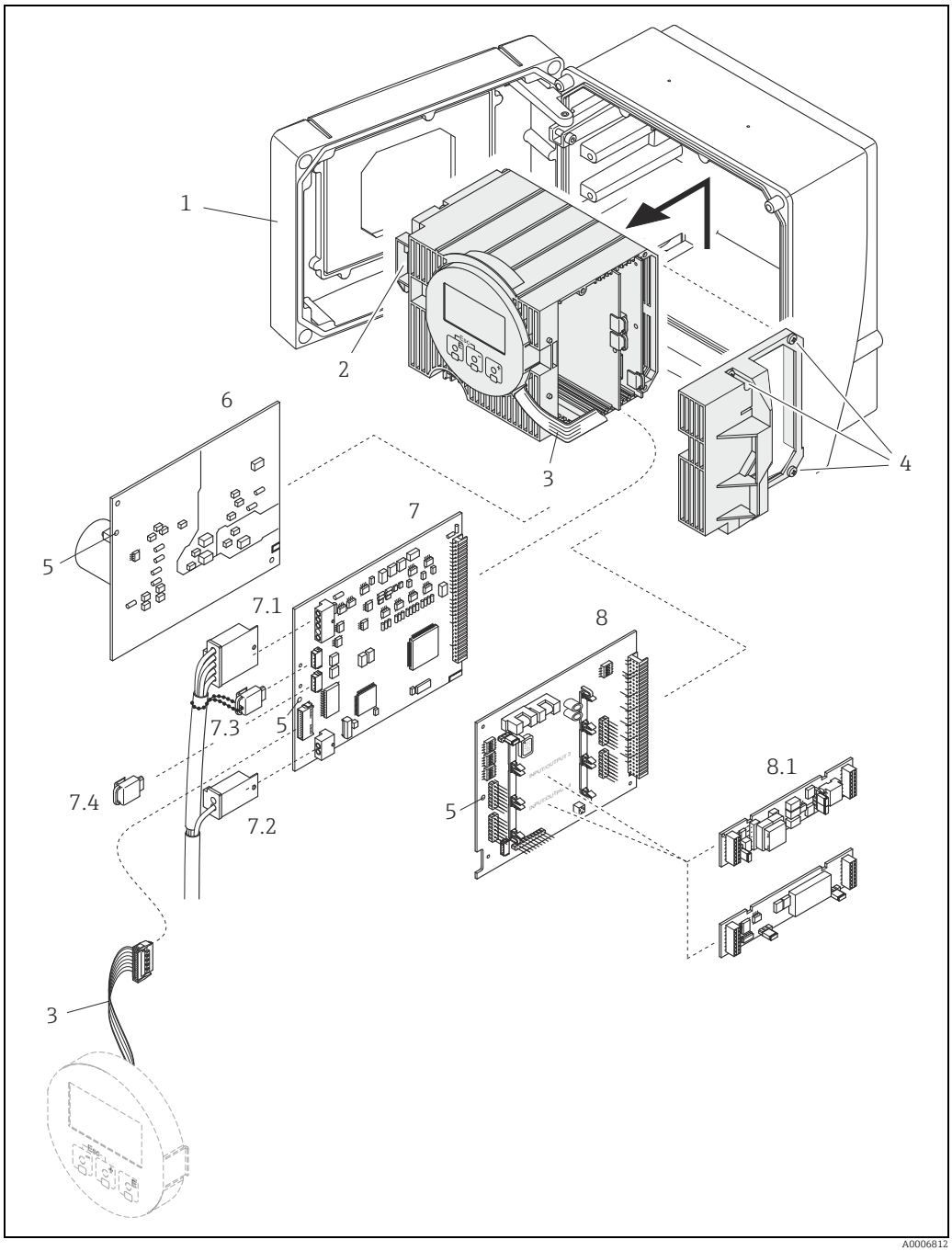

Fig. 40: Wall-mount housing: removing and installing printed circuit boards

1 Housing cover
2 Electronics module
3 Ribbon cable (display module)
4 Screws of electronics compartment cover
5 Aperture for installing/removing boards
6 Power unit board
7 Amplifier board
7.1 Signal cable (sensor)
7.2 Excitation current cable (sensor)
7.3 S-DAT (sensor data memory)
7.4 T-DAT (transmitter data memory)
8 I/O board (flexible assignment)
8.1 Optional: pluggable submodules (current output, pulse/frequency output and relay output)

10.6.2 Replacing the device fuse

Warning!
Risk of electric shock. Exposed components carry dangerous voltages. Make sure that the power supply is switched off before you remove the cover of the electronics compartment.

The device fuse is on the power unit board.→ 41.
Replace the fuse as follows:

1. Switch off power supply.
2. Remove the power unit board → 75.
3. Remove the protection cap (1) and replace the device fuse (2).
   Only use the following fuse type:
   – 20 to 55 V AC / 16 to 62 V DC → 2.0 A slow-blow / 250 V; 5.2 × 20 mm
   – Power supply 85 to 253 V AC → 0.8 A slow-blow / 250 V; 5.2 × 20 mm
   – Ex-rated devices → Ex documentation
4. Installation is the reverse of the removal procedure.

Caution!
Use only original Endress+Hauser parts.

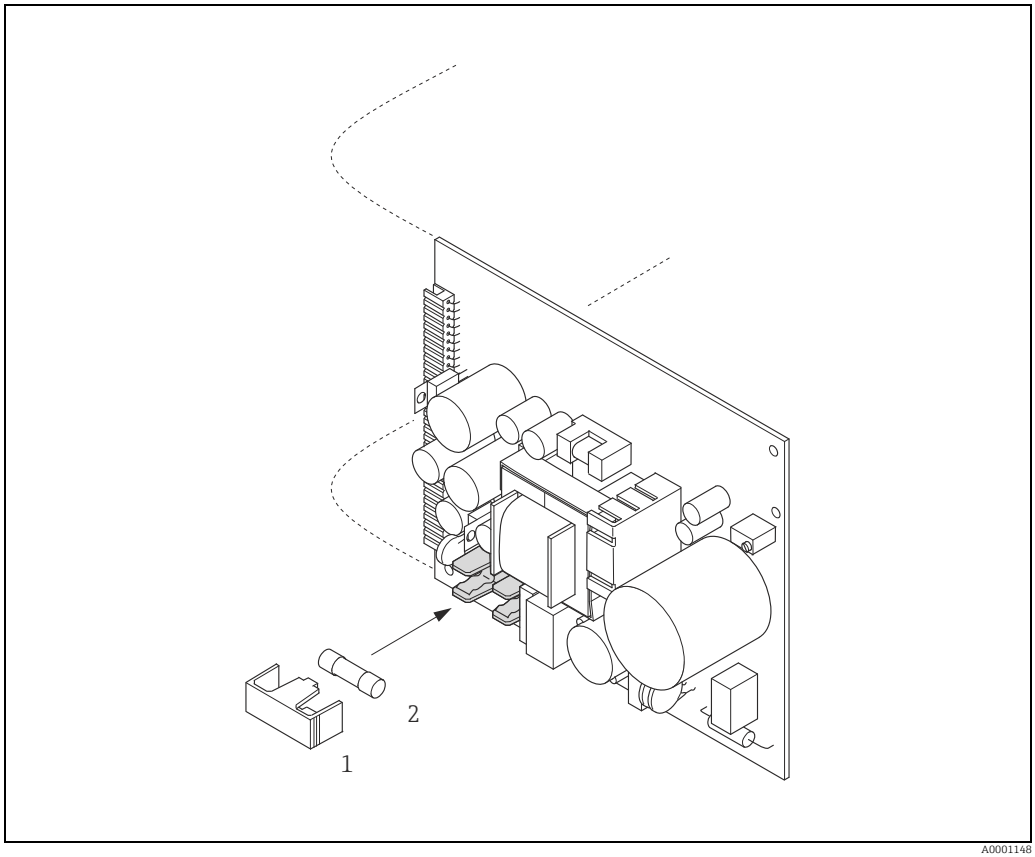

Fig. 41: Replacing the device fuse on the power unit board

1 Protective cap
2 Device fuse

10.7 Return

The measuring device must be returned if repairs or a factory calibration are required, or if the wrong measuring device has been ordered or delivered. According to legal regulations, Endress+Hauser, as an ISO-certified company, is required to follow certain procedures when handling returned products that are in contact with medium.

To ensure swift, safe and professional device returns, please read the return procedures and conditions on the Endress+Hauser website at www.services.endress.com/return-material.

10.8 Disposal

Observe the regulations applicable in your country.

10.9 Software history

Date	Software version	Changes to software	Operating Instructions
11.2024	3.06.xx	–	71681201/14.24
11.2015	3.06.xx	Original software	71240748/13.15
11.2009	3.06.00	Original software	71112148/04.10

11 Technical data

11.1 Applications

→ 📄 4

11.2 Function and system design

Measuring principle

Mass flow measurement by the Coriolis principle

Measuring system

→ 📄 6

11.3 Input

Measured variable

- Mass flow (proportional to the phase difference between two sensors mounted on the measuring tube to register a phase shift in the oscillation)
- Volume flow (calculated using mass flow and density)
- Fluid density (proportional to the resonance frequency of the measuring tube)
- Fluid temperature (via temperature sensors)

Measuring range

Measuring ranges for liquids

DN		Range for full scale values (liquids) $\dot{m}_{min(F)}$ to $\dot{m}_{max(F)}$	
[mm]	[in]	[kg/h]	[lb/min]
1	1/24"	0 to 20.00	0 to 0.735
2	1/12"	0 to 100.0	0 to 3.675
4	1/8"	0 to 450.0	0 to 16.54
6	1/4"	0 to 1000	0 to 36.75

Operable flow range

1 : 1000

Input signal

Status input (auxiliary input)

U = 3 to 30 V DC, R_i = 5 kΩ, galvanically isolated.
Switching level: 3 to 30 V DC, polarity-independent.
Configurable for: totalizer reset, positive zero return, error message reset, start zero point adjustment.

11.4 Output

Output signal

Current output

Active/passive selectable, galvanically isolated, time constant selectable (0.05 to 100 s), full scale value selectable, temperature coefficient: typically 0.005% o.r. / °C, resolution: 0.5 µA

- Active: 0/4 to 20 mA, R_L < 700 Ω
- Passive: 4 to 20 mA; supply voltage V_S: 18 to 30 V DC; R_i≥ 150 Ω

o.r. = of reading

Pulse/frequency output

Active/passive can be selected, galvanically isolated
- Active: 24 V DC, 25 mA (max. 250 mA during 20 ms), R_L > 100 Ω
- Passive: open collector, 30 V DC, 250 mA
- Frequency output: end frequency 2 to 10000 Hz (f_{max} = 12500 Hz), on/off ratio 1:1, pulse width max. 2 s
- Pulse output: pulse value and pulse polarity selectable, pulse width configurable (0.05 to 2000 ms)

Modbus RS485

- Modbus device type: slave
- Address range: 1 to 247
- Functions codes supported: 03, 04, 06, 08, 16, 23
- Broadcast: supported with the function codes 06, 16, 23
- Physical interface: RS485 in accordance with standard EIA/TIA-485
- Baud rate supported: 1200, 2400, 4800, 9600, 19200, 38400, 57600, 115200 Baud
- Transmission mode: RTU or ASCII
- Response time:
  Direct data access = typically 25 to 50 ms
  Auto-scan buffer (data area) = typically 3 to 5 ms
- Possible output combinations → 🖹 22

Signal on alarm

Current output
Failsafe mode selectable (for example, according to NAMUR Recommendation NE 43)

Pulse/frequency output
Failsafe mode selectable

Relay output
De-energized in the event of fault or power supply failure

Modbus RS485
If an error occurs, the value NaN (not a number) is output for the process variables.

Switching output

Relay output
Normally closed (NC or break) or normally open (NO or make) contacts available (factory setting: relay 1 = normally open), max. 30 V / 0.5 A AC; 60 V / 0.1 A DC, galvanically isolated.

Load

→ "Output signal"

Galvanic isolation

All circuits for inputs, outputs, and power supply are galvanically isolated from each other.

11.5 Power supply

Terminal assignment

→ 🖹 22

Supply voltage

85 to 253 V AC, 45 to 65 Hz
20 to 55 V AC, 45 to 65 Hz
16 to 62 V DC

Power consumption

AC: < 15 VA (including sensor)
DC: < 15 W (including sensor)

Switch-on current
- Max. 13.5 A (< 50 ms) at 24 V DC
- Max. 3 A (< 5 ms) at 253 V AC

Power supply failure

Lasting min. 1 power cycle:
- EEPROM or HistoROM T-DAT saves measuring system data if power supply fails.
- HistoROM/S-DAT: exchangeable data storage chip which stores the data of the sensor (nominal diameter, serial number, calibration factor, zero point etc.).

Electrical connections

→ 🖹 19

Potential equalization

No measures necessary.
For explosion-protected equipment →separate Ex-documentation supplied

Cable entries

Power supply and signal cables (inputs/outputs):
- Cable entry M20 × 1.5 (8 to 12 mm / 0.31 to 0.47")
- Threads for cable entries, ½" NPT, G ½"

Connecting cable for remote version:
- Cable entry M20 × 1.5 (8 to 12 mm / 0.31 to 0.47")
- Threads for cable entries, ½" NPT, G ½"

Cable specifications

Remote version→ 🖹 20

11.6 Performance characteristics

Reference operating conditions

- Error limits following ISO 11631
- Water, typically +15 to +45 °C (+59 to +113 °F); 2 to 6 bar (29 to 87 psi)
- Specification as per calibration protocol ±5 °C (±9 °F) and ±2 bar (±30 psi)
- Data on the measured error based on accredited calibration rigs traced back to ISO 17025

To obtain measured errors, use the Applicator sizing tool *Applicator*: → 🖹 63.

Maximum measured error

Design fundamentals → 🖹 85

o.r. = of reading; 1 g/cm³= 1 kg/l; T = fluid temperature

Base accuracy

Mass flow and volume flow (liquids)

- ±0.10% o.r. (mass flow)
- ±0.10% o.r. (volume flow)

Mass flow (gases)

- ±0.5% o.r.

Density (liquids)

- Reference conditions: ±0.0005 g/cm³
- Standard density calibrations: ±0.02 g/cm³ (valid over the entire measuring range of the sensor → 🖹 87)
- Wide-range density specification: ±0.002 g/cm³ (valid range for special density calibration: +5 to +80 °C (+41 to +176 °F))

Temperature

±0.5 °C ± 0.005 · T °C (±1.0 °F ± 0.003 · (T − 32) °F)

Zero point stability

DN		Zero point stability	
[mm]	[in]	[kg/h]	[lb/min]
1	1/24"	0.0008	0.00003
2	1/12"	0.002	0.00007
4	1/8"	0.014	0.0005
6	1/4"	0.02	0.0007

Flow values

Flow values as turndown parameter depending on nominal diameter.

SI units

DN [mm]	1:1 [kg/h]	1:10 [kg/h]	1:20 [kg/h]	1:50 [kg/h]	1:100 [kg/h]	1:500 [kg/h]
1	20.00	2.000	1.000	0.400	0.200	0.040
2	100.0	10.00	5.000	2.000	1.000	0.200
4	450.0	45.00	22.50	9.000	4.500	0.900
6	1000	100.0	50.00	20.00	10.00	2.000

US units

DN [in]	1:1 [lb/min]	1:10 [lb/min]	1:20 [lb/min]	1:50 [lb/min]	1:100 [lb/min]	1:500 [lb/min]
1/24"	0.735	0.074	0.037	0.015	0.007	0.001
1/12"	3.675	0.368	0.184	0.074	0.037	0.007
1/8"	16.54	1.654	0.827	0.330	0.165	0.033
1/4"	36.75	3.675	1.838	0.735	0.368	0.074

Accuracy of outputs

o.r. = of reading; o.f.s. = of full scale value

The output accuracy must be factored into the measured error if analog outputs are used, but can be ignored for fieldbus outputs (e.g. Modbus RS485).

Current output

Accuracy: Max. ±0.025 % o.f.s. or ±5 µA

Pulse/frequency output

Accuracy: Max. ±50 % ppm o.r.

Repeatability

Design fundamentals → 🖹 85

o.r. = of reading; 1 g/cm³ = 1 kg/l; T = fluid temperature

Base repeatability

Mass flow and volume flow (liquids)

- ±0.05% o.r. (mass flow)
- ±0.05% o.r. (volume flow)

Mass flow (gases)

- ±0.25% o.r. (mass flow)

Density (liquids)

- ±0.00025 g/cm^3

Temperature

±0.25 °C ± 0.0025 · T °C (±0.45 °F ± 0.0015 · (T − 32) °F)

Response time

- The response time depends on the configuration (damping).
- Response time in the event of erratic changes in the measured variable (only mass flow): after 100 ms 95 % of the full scale value.

Influence of medium temperature

When there is a difference between the temperature for zero point adjustment and the process temperature, the typical measured error is ±0.0002% of the full scale value / °C (±0.0001% of the full scale value / °F).

Influence of medium pressure

The tables below shows the effect on accuracy of mass flow due to a difference between calibration pressure and process pressure.

DN		Medium pressure	
[mm]	[in]	[% o.r./bar]	[% o.r./psi]
1	1/24"	–0.001	–0.00007
2	1/12"	0	0
4	1/8"	–0.005	–0.0004
6	1/4"	–0.003	–0.0002

Design fundamentals

o.r. = of reading
BaseAccu = base accuracy in % o.r.
BaseRepeat = base repeatability in % o.r.
MeasValue = measured value (in flow units consistent with the zero point stability value → 84)
ZeroPoint = zero point stability

Calculation of the maximum measured error depending on flowrate

Flowrate (in flow units consistent with the zero point stability value → 84)	Maximum measured error in % o.r.
$\geq \frac{\text{ZeroPoint}}{\text{BaseAccu}} \cdot 100$ A0021332	± BaseAccu A0021339
$< \frac{\text{ZeroPoint}}{\text{BaseAccu}} \cdot 100$ A002133	$\pm \frac{\text{ZeroPoint}}{\text{MeasValue}} \cdot 100$ A0021334

Calculation of the repeatability depending on flowrate

Flowrate (in flow units consistent with the zero point stability value → 🖹 84)	Repeatability in % o.r.
$\geq \frac{½ \cdot \text{ZeroPoint}}{\text{BaseRepeat}} \cdot 100$ A0021335	± BaseRepeat A0021340
$< \frac{½ \cdot \text{ZeroPoint}}{\text{BaseRepeat}} \cdot 100$ A0021336	$\pm ½ \cdot \frac{\text{ZeroPoint}}{\text{MeasValue}} \cdot 100$ A0021337

Example for maximum measured error

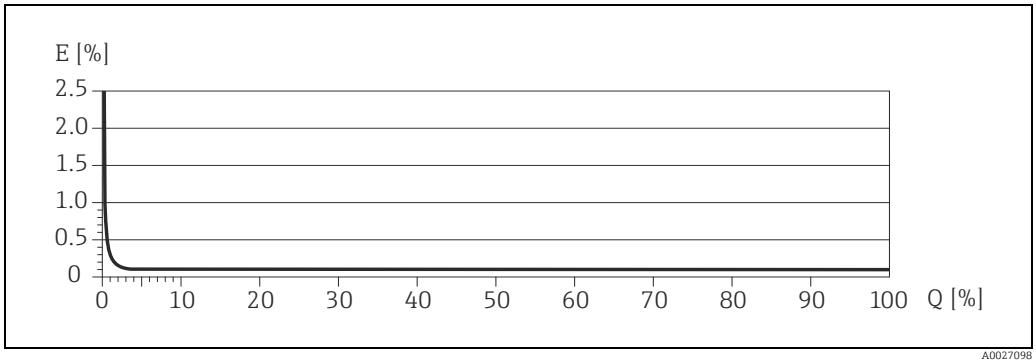

Fig. 42: E = Error: Maximum measured error as % o.r.
Q = Flow rate as %

11.7 Installation

Installation instructions

→ 🖹 11

Inlet and outlet runs

There are no installation requirements regarding inlet and outlet runs.

Connection cable length, remote version

Max. 20 m (max. 66 ft)

11.8 Environment

Ambient temperature range

Sensor and transmitter:
- Standard: −20 to +60 °C (−4 to +140 °F)
- Optional: −40 to +60 °C (−40 to +140 °F)

Note!
- Install the device in a shady location. Avoid direct sunlight, particularly in warm climatic regions.
- At ambient temperatures below −20 °C (−4 °F), the readability of the display may be impaired.

Storage temperature

−40 to +80 °C (−40 to +175 °F), preferably at +20 °C (+68 °F)

Degree of protection

Standard: IP 67 (NEMA 4X) for transmitter and sensor

Shock resistance

According to IEC/EN 60068-2-31

Vibration resistance

Acceleration up to 1 g, 10 to 150 Hz, following IEC/EN 60068-2-6

CIP cleaning

Yes

SIP cleaning

Yes

Electromagnetic compatibility (EMC)

As per IEC/EN 61326 and NAMUR Recommendation NE 21.

11.9 Process

Medium temperature range

Sensor

- −50 to +200 °C (−58 to +392 °F)

Seals (only for mounting sets with threaded connections):

- Viton: −15 to 200 °C (−5 to +392 °F)
- EPDM: −40 to +160 °C (−40 to +320 °F)
- Silicone: −60 to +200 °C (−76 to +392 °F)
- Kalrez: −20 to +275 °C (−4 to +527 °F)

Medium density

0…5000 kg/m³ (0 to 312 lb/cf)

Secondary containment pressure rating

The sensor housing is filled with dry nitrogen and protects the electronics and mechanics inside. The following secondary containment pressure rating is only valid for a fully welded sensor housing and/or a device equipped with closed purge connections (never opened, as delivered).

DN		Secondary containment rating (designed with a safety factor ≥ 4)		Burst pressure of secondary containment	
[mm]	[in]	[bar]	[psi]	[bar]	[psi]
1	1/24"	40	580	190	2780
2	1/12"	40	580	190	2780
4	1/8"	40	580	190	2780
6	¼"	40	580	190	2780

Note!
In case a danger of measuring tube failure exists due to process characteristics, e.g. with corrosive process fluids, we recommend the use of sensors whose secondary containment is equipped with special pressure monitoring connections (ordering option). With the help of these connections, fluid collected in the secondary containment in the event of tube failure can be bled off. This is especially important in high pressure gas applications. These connections can also be used for gas circulation and/or gas detection.

Do not open the purge connections unless the containment can be filled immediately with a dry inert gas. Use only low gauge pressure to purge. Maximum pressure: 5 bar (72.5 psi).

If a device fitted with purge connections is connected to the purge system, the maximum nominal pressure is determined by the purge system itself or by the device, depending on which component has the lower nominal pressure. If, on the other hand, the device is fitted with a rupture disk, the rupture disk is decisive for the maximum nominal pressure (→ 88).

Pressure-temperature ratings

An overview of the Pressure-temperature ratings for the process connections is provided in the "Technical Information" document.

Rupture disk

To increase the level of safety, a device version with a rupture disk with a triggering pressure of 10 to 15 bar (145 to 217.5 psi) can be used. Special mounting instructions: (→ 🖹 14).

Limiting flow

→ 🖹 81, "Measuring range"

The suitable nominal diameter is determined by optimizing the settings between the required flow range and the permissible pressure loss. An overview of the maximum possible full scale values is provided in the "Measuring range" section.

- The minimum recommended full scale value is approx. 1/20 of the max. full scale value.
- In most applications, 20 to 50% of the maximum full scale value can be considered ideal.
- Select a low full scale value for abrasive substances, such as liquids with entrained solids (flow velocity < 1 m/s (< 3 ft/s)).

Pressure loss

To calculate the pressure loss, use the *Applicator* sizing tool (→ 🖹 63).

System pressure

→ 🖹 12

11.10 Mechanical construction

Design / dimensions

The dimensions and lengths of the sensor and transmitter are provided in the separate "Technical Information" document on the measuring device in question. This can be downloaded as a PDF file from www.endress.com. A list of the "Technical Information" documents available is provided in the "Documentation" section → 🖹 91.

Weight

Compact version		Remote version	
[kg]	[lb]	[kg]	[lb]
5.5	12.1	3.3	7.3

Material

Transmitter housing

- Compact version
  - Aluminum housing: powder-coated die-cast aluminum
- Remote version
  - Wall-mount housing: powder coated die-cast aluminum
  - Field housing: powder-coated die-cast aluminum

Sensor connection housing (remote version)

- Powder-coated die-cast aluminum

Sensor housing / secondary containment

- Acid-resistant and alkali-resistant external surface
- Stainless steel 1.4301 (304)

Process connections

Process connections	Material
4-VCO-4 coupling 4-VCO-8 coupling	Stainless steel, 1.4539 (904L);
Mounting kit: flange according to EN1092-1 (DIN 2501) Mounting kit: flange according to ASME B16.5 Mounting kit: JIS B2220, flange	Stainless steel, 1.4539 (904L); Loose flange (not wetted): stainless steel, 1.4404 (F316/ 316L)
Mounting kit: NPTF threaded adapter ¼" Mounting kit: NPTF threaded adapter ½"	Stainless steel, 1.4539 (904L);

Measuring tube

- 1.4539 (904L)

Seals for mounting set

- Viton
- EPDM
- Silicone
- Kalrez

Process connections

→ 🖹 89, process connections

11.11 Operability

Local display

Display elements

- Liquid crystal display: illuminated, four lines with 16 characters per line
- Selectable display of different measured values and status variables
- 3 totalizers
- At ambient temperatures below −20 °C (−4 °F), the readability of the display may be impaired.

Operating elements

- Local operation with three optical sensors (⊟/⊞/ Ⓔ)
- Application specific Quick Setup menus for straightforward commissioning

Language groups

Language groups available for operation in different countries:
- Western Europe and America (WEA): English, German, Spanish, Italian, French, Dutch and Portuguese
- Eastern Europe/Scandinavia (EES): English, Russian, Polish, Norwegian, Finnish, Swedish, Czech
- South and East Asia (SEA): English, Japanese, Indonesian
- China (CN): English, Chinese

Note!
You can change the language group via the operating program FieldCare.

Remote operation

Operation by means of Modbus protocol.

11.12 Certificates and approvals

CE mark

The measuring system is in conformity with the statutory requirements of the EC Directives. Endress+Hauser confirms successful testing of the device by affixing to it the CE mark.

C-tick mark

The measuring system meets the EMC requirements of the Australian Communications and Media Authority (ACMA).

Ex approval

Information about currently available Ex versions (ATEX, NEC/CEC etc.) can be supplied by your Endress+Hauser representative on request. All explosion protection data are given in a separate documentation, which is also available upon request → 🖹 91.

Modbus certification

The measuring device meets all the requirements of the Modbus/TCP conformity and integration test and has the "Modbus/TCP Conformance Test Policy, Version 2.0". The measuring device has successfully passed all the test procedures carried out and is certified by the "Modbus/TCP Conformance Test Laboratory" of the University of Michigan.

Functional safety

SIL 2: in accordance with IEC 61508/IEC 61511-1 (FDIS)

Pressure measuring device approval

The measuring devices can be ordered with or without PED (Pressure Equipment Directive). If a device with PED is required, this must be ordered explicitly. For devices with nominal diameters less than or equal to DN 25 (1"), this is neither possible nor necessary.

- With the identification PED/G1/III on the sensor nameplate, Endress+Hauser confirms conformity with the "Basic safety requirements" of Appendix I of the Pressure Equipment Directive 97/23/EC.
- Devices with this identification (with PED) are suitable for the following types of fluid:
  - Fluids of Group 1 and 2 with a steam pressure greater than, or smaller and equal to 0.5 bar (7.3 psi)
  - Unstable gases
- Devices without this identification (without PED) are designed and manufactured according to good engineering practice. They correspond to the requirements of Art. 3, Section 3 of the Pressure Equipment Directive 97/23/EC. Their application is illustrated in Diagrams 6 to 9 in Appendix II of the Pressure Equipment Directive 97/23/EC.

Other standards and guidelines

- EN 60529:
  Degrees of protection provided by enclosures (IP code)
- EN 61010-1:
  Safety requirements for electrical equipment for measurement, control and laboratory use
- IEC/EN 61326:
  Electromagnetic compatibility (EMC requirements)
- NAMUR Recommendation NE 21: Electromagnetic compatibility (EMC) of industrial process and laboratory control equipment
- NAMUR Recommendation NE 43:
  Standardization of the signal level for the breakdown information of digital transmitters with analog output signal.
- NAMUR Recommendation NE 53:
  Software of field devices and signal-processing devices with digital electronics

11.13 Accessories/spare parts

→ 🖹 63

11.14 Documentation

- Flow measurement (FA00005D/06)
- Description of Device Parameters (GP00004D/06)
- Operating Instructions Modbus RS485 (BA00142D/06)
- Technical Information (TI00099D/06)
- Ex-Supplementary documentation ATEX (II2G): (XA00139D/06)
- Ex-Supplementary documentation NEC/CEC (Div. 1): (XA00141D/06)
- Ex-Supplementary documentation NEPSI (Zone 1, Zone 21): (XA142D/06)

Index

A
Ambient temperature range 86
Applications 4, 81
Applicator (Auslege-Software) 63
Approvals 8
Auto-scan buffer 39

B
Blocks 28
Broadcast message 33
Byte transmission sequence 37

C
Cable entries
  Degree of protection 23
  Technical data 83
Cable specifications
  MODBUS RS485 19
  Remote version connecting cable 21
CE mark (Declaration of Conformity) 8
Certificates 8
Cleaning
  CIP cleaning 87
  External cleaning 62
Code entry (function matrix) 29
Commissioning
  Current output 55
  Quick Setup 46
  Relay output 57
  Zero point adjustment 58
Connection
  See Electrical connection
Current output
  Configuration active/passive 55
  Technical data 81

D
Data back-up 52
Data types 37
Declaration of Conformity (CE mark) 8
Degree of protection 23, 86
Designated use 4, 81
Device designation 6
Device parameters
  See "Description of Device Parameters" manual
Disposal 80
Documentation 91
Down pipe 11

E
Electrical connection
  Cable specifications (remote version) 21
  Degree of protection 23
  Post-connection check 24
  Remote version 20
Error messages
  Confirming error messages 30
  System error (device error) 66
Error messages (MODBUS) 38
Error types (system and process errors) 30
European Pressure Equipment Directive 90
Ex approval 90
External cleaning 62

F
FieldCare 42
Flow direction 13
Frequency output 82
Function code 34
Function groups 28
Functions 28
Fuse, replacing 79
FXA193 64

G
Galvanic isolation 82
Grounding 19
Groups 28

H
Hardware write protection 43
HOME position (display operating mode) 25

I
Incoming acceptance 10
Inlet and outlet runs 86
Inlet runs 14
Input signal 81
Installation
  See Installation conditions
Installation conditions
  Dimensions 11
  Down pipe 11
  Inlet and outlet runs 14
  Mounting location 11
  Orientation (vertical, horizontal) 13
  System pressure 12
  Vibrations 14
Installation instructions 86
Installation, commissioning and operation 4

L
Language groups 89
Length of connecting cable 86
Life Cycle Management 63
Load 82
Local display
  See Display

M
Maintenance 62
Master/slave communication 33
Material 88
Measured variables 81

Measuring principle 81
Measuring range 81
Measuring system 6
MODBUS RS485
Address model 36
Auto-scan buffer 39
Byte transmission sequence 37
Cable specification 19
Data types 37
Error messages 38
Function code 34
Master/slave devices 32
Max. writes 35
QS Communication 50
Register address 36
Response times 36
System architecture 32
Technical data 82
Technology 32
Telegram 34

N
Nameplate
Connections 8
Sensor 7

O
Operating conditions 86
Operation
FieldCare 42
Operational safety 4
Order code
Sensor 8
Transmitter 7
Outlet runs 14
Output signal 81–82

P
Performance characteristics
Influence of medium temperature 85
Reference operating conditions 83
Repeatability 85
Polling 33
Post-installation check (checklist) 18
Power consumption 83
Power supply (supply voltage) 82
Power supply failure 83
Pressure loss 88
Pressure measuring device approval 90
Pressure monitoring connections 61
Printed circuit boards (installation/removal)
Field housing 75
Wall-mount housing 77
Process error
Definition 30
Programming mode
Enabling 29
Pulsating flow
Quick Setup 47–48
Pulse output
See Frequency output
Pumps, mounting location, system pressure 12
Purge connections 61

Q
Quick Setup
Commissioning 46
Communication 50
Pulsating flow 47–48

R
Register address 36
Registered trademarks 9
Relay output 57
Repeatability (performance characteristics) 85

S
Safety conventions 5
Safety instructions 4
S-DAT (HistoROM) 61
Secondary containment
Gas purging, pressure monitoring connections 61
Sensor heating 13
Serial number 7–8
Shielding 19
Shock resistance 86
Signal on alarm 82
Software
Amplifier display 44
Spare parts 74
Standards, guidelines 90
Status input
Technical data 81
Storage 10
Supply voltage (power supply) 82
System error
Definition 30
Messages 66

T
T-DAT (HistoROM) 61
T-DAT SAVE/LOAD (functionality) 52
Temperature ranges
Ambient temperature range 86
Storage temperature 86
Transmitter
Electrical connection 21
Installing the wall-mount housing 16
Turning the field housing (aluminum) 15
Transporting the sensor 10
Troubleshooting and remedy 65

V
Vibration resistance 87
Vibrations 14, 87

W
W@M 63
Wiring 19
See Electrical connection

Writes (max.) 35

Z

Zero point adjustment 58

www.addresses.endress.com

Endress+Hauser

People for Process Automation