Pneumatic Positioner
Electropneumatic Positioner
Type 3760



Type 3760 Positioner

Mounting and Operating Instructions

EB 8385 EN

Edition July 2012

Contents

1	**Design and principle of operation**	**6**
2	**Attachment to actuators**	**8**
2.1	Adjusting the operating direction	8
2.2	Installing the clamp	10
3	**Connections**	**13**
3.1	Pneumatic connections	13
3.1.1	Signal pressure indication	13
3.1.2	Supply pressure	13
3.1.3	Degree of protection IP 65	13
3.2	Electrical connections	14
3.2.1	Switching amplifier	14
4	**Operation – Setting**	**15**
4.1	Starting point and reference variable	15
4.2	Adjustment for "Actuator stem extends"	16
4.3	Adjustment for "Actuator stem retracts"	17
5	**Adjusting the limit switch**	**18**
5.1	Retrofitting a limit switch	18
6	**Converting the positioner**	**20**
6.1	Conversion from pneumatic p/p to electropneumatic i/p	20
6.2	Conversion from electropneumatic i/p to pneumatic p/p	21
7	**Dimensions in mm**	**22**



- The positioner is to be mounted, started up or operated only by trained and experienced personnel familiar with the product.
  According to these Mounting and Operating Instructions, trained personnel refers to individuals who are able to judge the work they are assigned to and recognize possible dangers due to their specialized training, their knowledge and experience as well as their knowledge of the applicable standards.
- Explosion-protected versions of this positioner may only be operated by personnel who have undergone special training or instructions or who are authorized to work on explosion-protected devices in hazardous areas.
- Any hazards that could be caused by the process medium, the operating pressure, the signal pressure or by moving parts of the control valve are to be prevented by means of the appropriate measures. If inadmissible motions or forces are produced in the actuator as a result of the supply pressure, the supply pressure must be restricted by means of a suitable supply pressure reducing station.
- Proper shipping and appropriate storage are assumed.

- **Note:** The device with a CE marking fulfils the requirements of the Directives 94/9/EC (ATEX) and 89/336/EEC (EMC). The declaration of conformity is available on request.

Versions

Positioner	Type	3760-	X	X	X	X	X	X
Explosion protection	Without		0					
	II 2G Ex ia IIC T6 acc. to ATEX		1					
	CSA/FM		3					
	II 3G Ex nA II T6 acc. to ATEX		8					
Additional equipment	Without			0				
	Inductive proximity switches			1				
Pneumatic connections	G ⅛				1			
	⅛ NPT				2			
Electrical connections	Without					0		
	M20 x 1.5 blue					1		
	M20 x 1.5 black					2		
	Connector DIN 43650					3		
Reference variable	0.2 to 1 bar/3 to 15 psi						0	0
	4 to 20 mA with i/p module 6109						1	1
	0 to 20 mA with i/p module 6112						2	2
	1 to 5 mA with i/p module 6112						2	3

Travel range		0 to 5 mm · 0 to 7.7 mm · 0 to 15 mm (see page 11 for range spring table)
Reference variable	pneumatic	0.2 to 1.0 bar (3 to 15 psi)
	electric	4 to 20 mA (also 0 to 20 mA with 6112 i/p module) · 1 to 5 mA
Split-range operation 0 to 50 % or 50 to 100 % with 7.5 and 15 mm travel		Internal resistance at 20 °C 4 to 20 mA: 200 Ω for safe areas · 250 Ω for hazardous areas 0 to 20 mA: 200 Ω 1 to 5 mA: 850 Ω
Supply air		1.4 to 6 bar (20 to 90 psi)
Signal pressure		0 to 6 bar (0 to 90 psi)
Characteristic		Linear, deviation from terminal-based conformity ≤ 1.5 %
Direction of action		Reversible
Hysteresis		≤ 0.5 %
Sensitivity		≤ 0.1 %
Steady-state air consumption		≤ 100 l_n/h at 0.6 bar signal pressure and supply pressure up to 6 bar
Air output capacity		At Δp 1.4 bar: 1600 l_n/h · At Δp 6 bar: 5000 l_n/h
Transit times with Type 3277 Actuator (15 mm travel, 0.2 to 1 bar signal pressure)		120 cm²: ≤ 2 s · 240 cm²: ≤ 6 s · 350 cm²: ≤ 8 s
Permissible ambient temperature		–20 to +70 °C Down to –30 °C with metal cable gland Down to –40 °C with metal cable gland and Type 6112 i/p Converter Limits in test certificates additionally apply for explosion-protected devices. –40 to +70 °C for Type 3760-00x000 Pneumatic Positioner without inductive limit switch
Influence		Temperature: zero point: ≤ 0.03 %/°C · Span: ≤ 0.03 %/°C Vibrations: between 5 and 120 Hz as well as 2 g ≤ 0.5 % Supply air: ≤ 0.6 %/1 bar
Electromagnetic compatibility		Requirements specified in EN 61000-6-2, EN 61000-6-3 and EN 61326-1 fulfilled
Variable position when turned 180°		< 3.5 %
Degree of protection		IP 54 (IP 65 with filter check valve, refer to accessories)
Weight		Approx. 0.6 kg
Materials		Housing: polyamide · External parts: stainless steel
Additional electrical equipment		
Inductive limit switch		Type SJ2-SN
Control circuit		Values corresponding to downstream switching amplifier
Hysteresis at rated travel		≤ 1 %

1 Design and principle of operation

The pneumatic or electropneumatic positioner ensures a preselected assignment of the valve stem position (controlled variable x) to the control signal (reference variable w).

The input signal received from a control unit is compared to the travel of the control valve, and a corresponding pneumatic signal pressure (output variable) is produced.

The positioner mainly consists of a pneumatic unit including a clamp (10), range spring (7), diaphragm lever (4) and a booster (12) with a double plug (13).

The electropneumatic positioner is additionally equipped with an electropneumatic converter (2).

The positioner is designed for direct attachment to SAMSON Type 3277 Actuators.

The control signal from the control unit, provided it is a pneumatic signal, is applied directly to the measuring diaphragm (3) as pressure signal p_e. Whereas a DC current input signal in the range of 4 to 20 mA, for example, is directly passed on to the electropneumatic converter (i/p converter), where it is converted into a proportional pressure signal p_e.

The pressure signal p_e produces a force on the measuring diaphragm (3), which is balanced by the force of the range spring (7). The deflection of the diaphragm (3) causes the diaphragm lever (4) to move. The double plug (13) in the booster (12) follows this motion, producing a signal pressure p_{st}.

The operating direction of the signal pressure, either increasing >> or <> decreasing when the input signal increases, depends on the position of the booster which can be rotated by 180°.

A change in either the input signal or the valve position causes a pressure change in the booster. The output pressure p_{st} of the booster moves the plug stem to a position corresponding with the given control signal (reference variable).

The adjustment screws for ZERO (5) and SPAN (8) are used to adjust the lower and upper range value of the input signal.

The range spring (7) must be chosen to match both the rated valve travel and the nominal span of the reference variable.

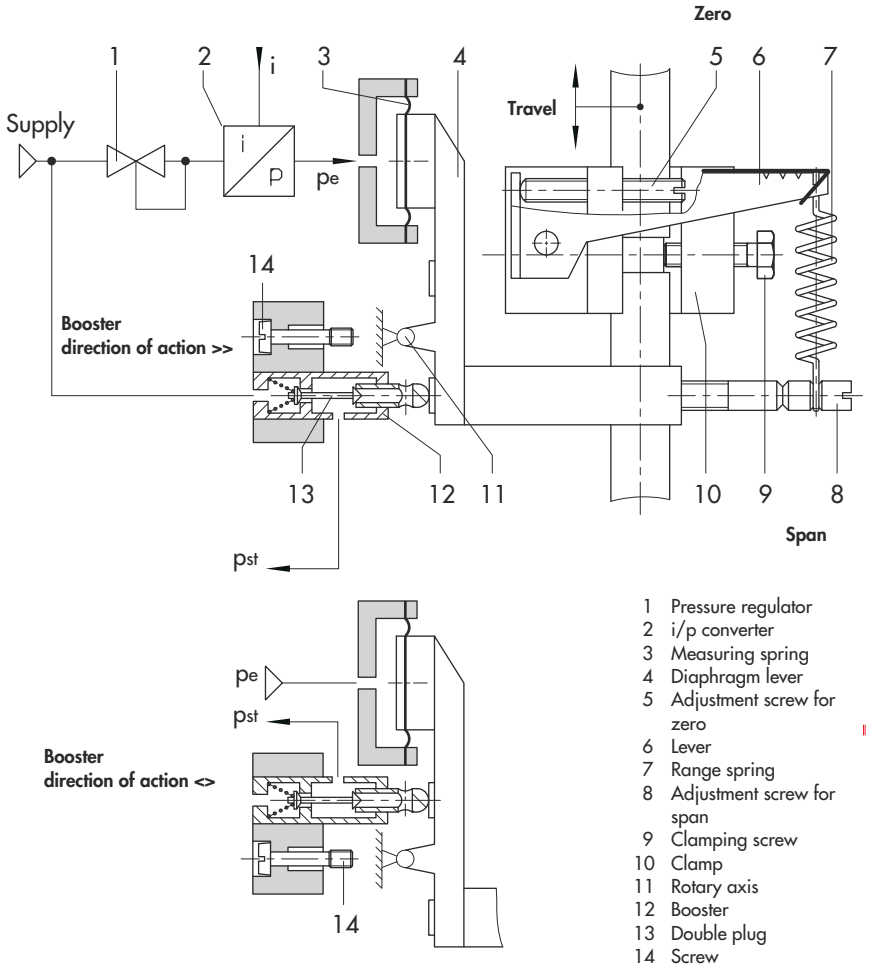

Fig. 1 · Functional diagram

2 Attachment to actuators

The positioner is attached directly to the actuator yoke using the two screws inside the housing. The rubber profile serves as a seal between positioner housing and yoke.

The following accessories are required to mount the positioner: clamp, cover plate and a plug with seal.

The required mounting kit is listed in the table on page 12.

For attachment to 120 cm² actuators (Fig. 3), remove the filter installed in the side signal pressure connection. The connection (output 36) must be sealed by a plug with seal (see accessories).

The signal pressure is routed over the signal pressure hole at the back of the housing directly through the yoke into the associated diaphragm chamber.

When attaching the positioner to the yoke, make sure that the seal containing a filter is installed in the side hole of the yoke.

How the signal pressure is supplied to the actuator depends on whether the positioner is attached on the left or right side of the yoke. For this purpose, the corresponding symbol on the **switchover plate** must be aligned with the mark (point) on the yoke.

If, in addition to the positioner, a solenoid valve or a similar device is to be attached to the actuator, the signal pressure hole at the back of the positioner housing must be sealed. To do so, remove the screw installed (parking position) in the hole below the signal pressure hole and screw it into the signal pressure hole.

In this case, the signal pressure must be routed from the signal pressure connection (output) to the actuator using a **connecting plate**. The switchover plate is no longer used.

Note: *Switchover and connecting plates are accessories for the 120 cm² actuator. For details, see table on page 12.*

For attachment to 240 and 350 cm² actuators (Fig. 2), the signal pressure must be supplied to the signal pressure connection of the actuator using the appropriate hook-up. The required hook-up kit is listed in the table on page 12.

Furthermore, the signal pressure hole on the back of the positioner housing has to be sealed. To do so, remove the screw installed in the hole below the signal pressure hole (parking position) and screw it into the signal pressure hole (see Fig. 3).

2.1 Determinng the direction of action

The positioner's direction of action also determines its attachment position on the actuator, either on the left or right side of the yoke as illustrated in Figs. 3 and 2. The position of the booster (12) must be arranged accordingly on the positioner.

When the input signal (reference variable) increases, the signal pressure p_{st} may either increase (direct action >>) or decrease (reverse action <>). The same applies when the input signal decreases. For direct action >>, the signal pressure decreases, whereas it increases for reverse action <>.

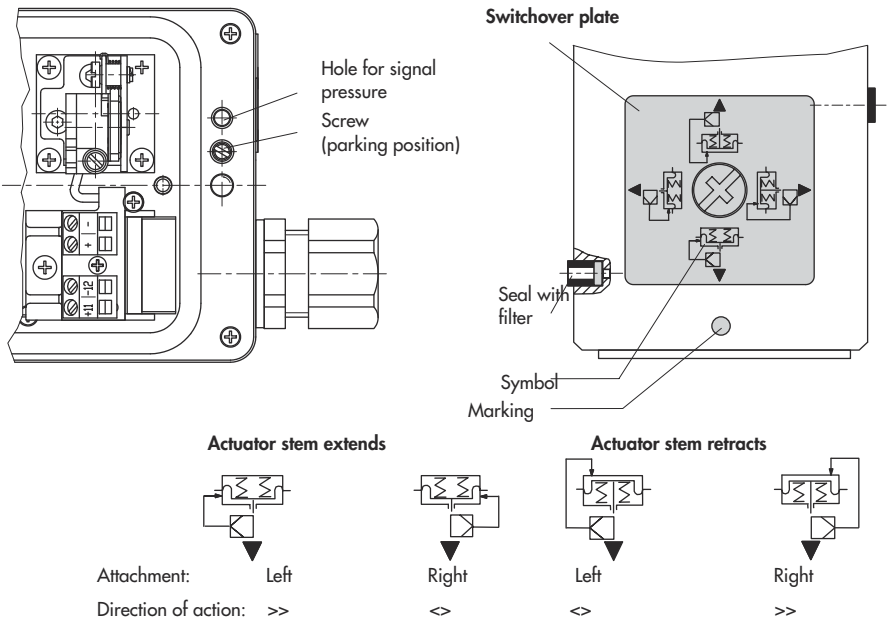

Fig. 3 · Signal pressure connection using a switchover plate for 120 cm²

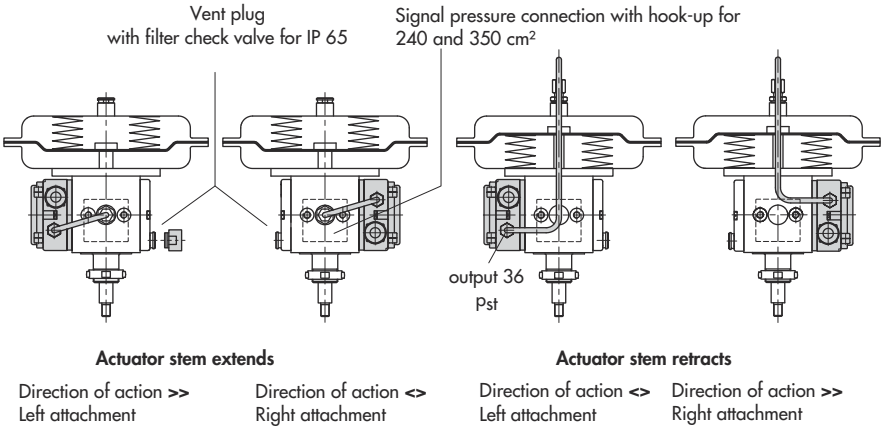

Fig. 2 · Mounting position of positioner with 240 and 350 cm² actuators

The symbols indicating the direction of action are marked on the booster. The desired symbol must be aligned with the arrow stamped on the positioner housing.

If the indicated symbol does not correspond with the required direction of action, proceed as follows: remove the mounting screw and booster. Rotate booster by 180°, reinstall it and fasten it with the screw.

Note: *If the adjusted direction of action of an attached positioner must be changed at a later stage, the mounting positions of the booster and positioner on the valve must be changed as well.*

Attachment on the left or right side specifies that, when looking onto the switchover plate or the signal pressure connection, the positioner must be secured on either the right or left side of the actuator yoke. The signal pressure output (output 36) of the positioner must point to the front towards the connections (Fig. 2).

2.2 Mounting the clamp

After attaching the positioner to the yoke, the clamp must be secured to the actuator stem on the opposite side (Fig. 4).

1. Insert the clamp in the yoke next to the actuator stem (for 120 cm² actuators, tilt by 90° prior to inserting it).
2. Plug the clamp onto the actuator stem and secure it with the clamping screw. Make sure that the clamping screw rests in the groove of the actuator stem and that the clamp is aligned at an exact right angle.
3. Hook up the range spring between the lever of the clamp and the SPAN adjustment screw, placing it in the outer groove with 5 and 6 mm travel and in the inner groove with 10.5 and 12 mm travel. Turn ZERO adjustment screw to slightly tension the spring.

The range spring of the positioner is assigned to different travels and input ranges which must be selected according to the table on page 11. The range springs are color-coded.

Adjust the positioner before closing the actuator yoke with the cover plate (see section 4).



When making adjustments during operation, the actuator is under pressure. The moving actuator stem can cause severe injuries to hands and fingers.
Always use tools when working on the clamp and range spring!

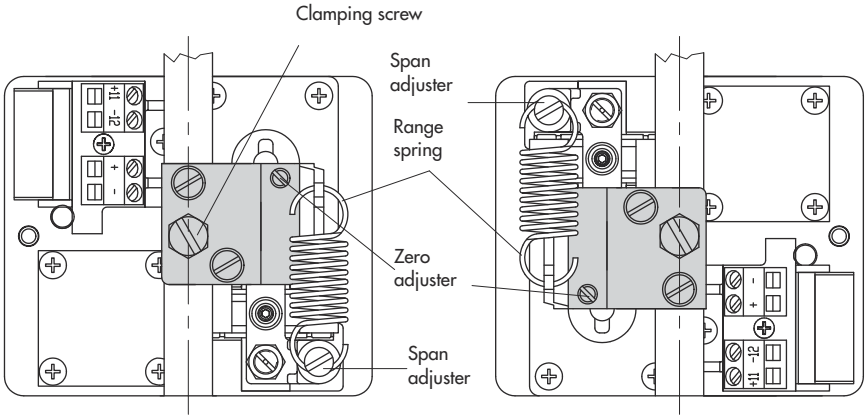

Fig. 4 · Mounting the clamp

Range spring	Color coding	Reference variable	Travel	Order no.
1	Yellow	0...100 % 0...50 % 50...100 %	12/15 6/7.5 6/7.5	1400-6892
2	Red	0...100 %	6/7.5	1400-6893
3	Green	0...50 %	12/15	1400-6894
4	Blue	50...100 %	12/15	1400-6895
5	White	0...100 %	5	1400-6896
6	Brown	0...100 %	20	1400-6975
7	Black	0...50 % 50...100 %	5 5	1400-6976

Accessories		Order no.			
Mounting kit (clamp and cover plate)		120 cm² actuator		240 and 350 cm² actuators	
		1400-6898		1400-6899	
Hook-up kit with 6 x 1 mm pipe for 240 and 350 cm² actuators					
Actuator		Actuator stem extends		Actuator stem retracts	
		Left attachment	Right attachment	Left attachment	Right attachment
240 cm²	Zinc coated	1400-6919		1400-6921	1400-6923
	Stainless steel	1400-6920		1400-6922	1400-6924
350 cm²	Zinc coated	1400-6919		1400-6925	1400-6927
	Stainless steel	1400-6920		1400-6926	1400-6928
Mounting kit Pressure gauge for signal pressure (output) for version **without** hook-up					1400-6900
Mounting kit Pressure gauge for signal pressure (output) for version **with** hook-up for 6 mm pipe diameter Additional tee piece (CrNiMo steel) Additional pipe socket (CrNiMo steel)					1400-6900 8582-0721 8582-3330
Accessories for Type 3277-5 Actuator (120 cm²)		Switchover plate (old) for actuator 3277-5xxxxxx.**00** (old)			1400-6819
		Switchover plate **(new)** for actuator 3277-5xxxxxx.**01** (new)			1400-6822
		Connecting plate (old) for actuator 3277-5xxxxxx.**00** (old)		G ⅛ ⅛ NPT	1400-6820 1400-6821
		Connecting plate **(new)** for actuator 3277-5xxxxxx.**01** (new)			1400-6823
Note: *Actuators with model index **01** can only be used with new switchover or connecting plates. Old and new plates are **not** interchangeable!*					
Cable glands M20 x 1.5 Plastic, black Plastic, blue Metal cable gland down to –40 °C Adapter M20 x 1.5 to ½ NPT, powder-coated aluminum					 8808-1011 8808-1012 1890-4875 0310-2149
Filter check valve Replaces vent plug (Fig. 2) and increases the degree of protection to IP 65					1790-7408

3 Connections

3.1 Pneumatic connections

The pneumatic connections are designed as ⅛-18 NPT or ISO 228/1-G ⅛ tapped holes. The supply input (SUPPLY 9) is fitted with a filter to clean impure air. The filter is fixed on a support and can be removed using a screwdriver for cleaning or replacement, if necessary (filter order no. 1400-6897).

The customary male fittings for metal and copper pipes or plastic hoses can be used.

Note: *The supply air must be dry and free of oil and dust.*
Observe maintenance instructions of upstream pressure reducing stations.
Thoroughly blow out all air lines before connection.

3.1.1 Signal pressure indication

To precisely adjust the positioner, we recommend attaching a pressure gauge to the positioner to measure the signal pressure (OUTPUT 36).

The attachment kit is listed in the accessories table on page 12.

3.1.2 Supply pressure

The required supply pressure depends on the bench range and the direction of action (fail-safe action) of the actuator.

The bench range is indicated as spring range or signal pressure range on the nameplate; the direction of action is specified by a symbol.

Actuator stem extends:
Fail-safe action "valve CLOSED"
(with globe and angle valves)

Required supply pressure = upper bench range value + 0.2 bar, at least 1.4 bar.

Actuator stem retracts:
Fail-safe action "valve OPEN"
(with globe and angle valves)

The required supply pressure for tight-closing valves is roughly calculated from the equation for the maximum signal pressure pst_{max}:

$$pst_{max} = F + \frac{d^2 \cdot \pi \cdot \Delta p}{4 \cdot A} \text{ bar}$$

d = seat diameter [cm]
Δp = differential pressure at the valve [bar]
A = effective diaphragm area [cm²]
F = upper bench range value of the actuator

If no values are specified, calculate as follows:

Required supply pressure = upper bench range value + 1 bar

3.1.3 Degree of protection IP 65

To increase the degree of protection from IP 54 to IP 65, replace the vent plug on the actuator casing with the filter check valve (accessories). For details, see Fig. 2.

3.2 Electrical connections

For electrical installation, observe the relevant electrotechnical regulations and the accident prevention regulations that apply in the country of use.

The following regulations apply to mounting and installation in hazardous areas:
EN 60079-14: 2008 ***Explosive atmospheres – Part 14: Electrical installations design, selection and erection*** *(or VDE 0165 Part 1).*

CAUTION!

- *Adhere to the terminal assignment!*
- *Switching the assignment of the electrical terminals may cause the explosion protection to become ineffective!*
- *Do not loosen enameled screws in or on the housing.*
- *The maximum permissible values specified in the national EC type examination certificates apply when interconnecting intrinsically safe electrical equipment (U_i or U_o; I_i or I_o; P_i or P_o; C_i or C_o, and L_i or L_o).*

Selecting cables and wires:

Observe ***Clause 12 of EN 60079-14: 2008*** *(VDE 0165 Part 1) when installing intrinsically safe circuits. The Subclause 12.2.2.7 applies when running multi-core cables containing more than one intrinsically safe circuit.*

In particular, the radial thickness of the conductor insulation for common insulation materials, such as polyethylene, must have a minimum radial thickness of 0.2 mm.

The diameter of an individual wire in a fine-stranded conductor must not be smaller than 0.1 mm. Protect the conductor ends against splicing, e.g. by using wire-end ferrules.

When two separate cables are used for connection, an additional cable gland can be installed.

Seal cable entries left unused with plugs.

Devices used at ambient temperatures ***below –20 °C*** *must be fitted with metal cable glands.*

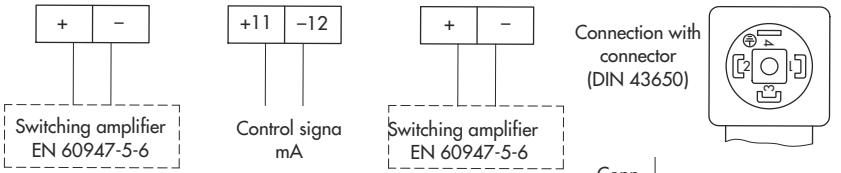

Connector	Terminal	
1	+11	i/p converter
2	–11	
3	+	Limit switch
4	–	

Fig. 5 · Terminal connections

Equipment for use in zone 2/zone 22

In equipment operated with type of protection Ex nA II (non-sparking equipment) according to EN 60079-15: 2003, circuits may be connected, interrupted or switched while energized only during installation, maintenance or repair.

Cable entries

For electropneumatic positioner versions, connect the reference variable lines to the terminals +11 and –12 using the cable gland.

Versions with limit switch require their electric lines to be connected to the terminals + and –.

Cable glands are available as accessories. For details, see table on page 12.

3.2.1 Switching amplifier

For operation of the inductive limit switch, a switching amplifier must be connected in the output circuit. For installation in hazardous areas, observe the relevant regulations.

4 Operation – Adjustment

4.1 Starting point and reference variable

The built-in range spring of the positioner is assigned to the rated valve travel and the input signal (reference variable), as specified in the range spring table on page 11.

Normally, the reference variable span is 100 % = 0.8 bar or 16 mA.

A smaller span of, for example, 50 % = 0.4 bar or 8 mA is only required for split-range operation (Fig. 6).

The span can be changed by replacing the range spring.

When making adjustments on the positioner, the travel must be adapted to the input signal (reference variable) and vice versa.

With an input signal of, for example, 0.2 to 1 bar or 4 to 20 mA, the valve must travel through its full range, i.e. from 0 to 100 %.

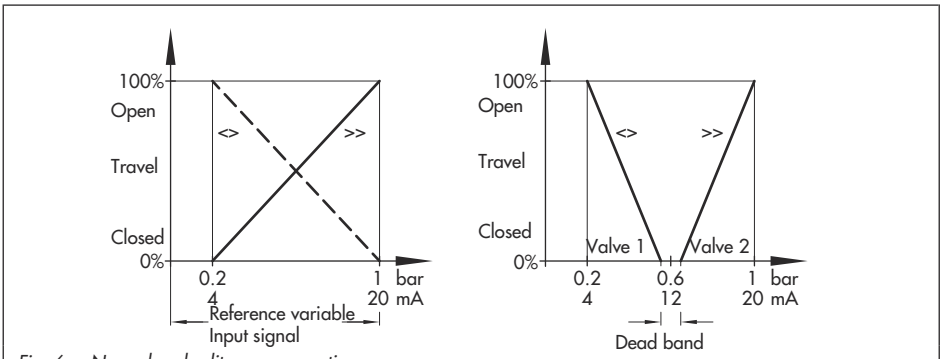

Fig. 6 · Normal and split-range operation

The starting point (zero) in this case is 0.2 bar or 4 mA, the upper range value is 1 bar or 20 mA.

In split-range operation, the controller output signal intended to actuate two control valves is split into half to allow each valve to pass through its entire travel range at one half of the signal range (e.g. first valve adjusted to 0.2 to 0.6 bar or 4 to 12 mA, and the second valve adjusted to 0.6 to 1 bar or 12 to 20 mA).

To avoid any crossing-over, allow for a dead band of ± 0.05 bar or ± 0.5 mA as shown in Fig. 6.

The starting point (zero) is adjusted at the ZERO adjustment screw (5). The reference variable span, and thus the upper range value is adjusted at the SPAN adjustment screw (8).

- In a **pneumatic** positioner, connect an air source providing max. 1.5 bar to the positioner input (IN SIGNAL 27) via a remote adjuster and a pressure gauge.
- In an **electropneumatic** positioner, connect an ammeter to the terminals +11 and –12.
- Connect compressed air to the supply input (SUPPLY 9); also see section 3.1.2.

4.2 Adjustment for actuator with fail-safe action "Actuator stem extends"

NOTICE

To ensure that the full closing force can be effective at the control valve, the diaphragm chamber must be completely vented when reaching the lower range value (direction of action >>) or the upper range value (direction of action <>) of the reference variable.

Therefore, set the input signal to a slightly increased starting point of approx. 0.23 bar (4.5 mA) when the direction of action is direct >>, and to a slightly lowered starting point of 0.97 bar (19.5 mA) when the direction of action is reverse <>.

This applies in particular to controllers and control systems whose output signal is limited to a range of 4 to 20 mA.

Starting point (zero)
e.g. 0.23 bar (4.5 mA)

1. Turn ZERO adjustment screw (5) until the plug stem just begins to move from its resting position (observe plug stem at the travel indicator).
2. Decrease input signal and increase again slowly. Check whether the plug stem starts moving at a starting point of 0.23 bar (4.5 mA) and correct it, if necessary.

Upper range value (travel)
e.g. 1 bar (20 mA)

3. After the starting point has been adjusted, increase input signal.

   The plug stem must stand still at an upper range value of exactly 1 bar (20 mA). It must have passed through 100 % travel (observe the travel indicator on the valve!). If the upper range value does not correlate, correct it by adjusting the SPAN adjustment screw (8).
   Turning the screw towards the fulcrum of the lever increases the travel, whereas turning it away reduces the travel.

Note: *Make sure that the range spring (7) is in the upright position for adjustment. If necessary, hook the spring at another point on the lever (6).*

NOTICE
If you change the span, the zero point must be readjusted as well.

4. Check upper range value again. Readjust both values until they are correct.

4.3 Adjustment for actuator with fail-safe action "Actuator stem retracts"

NOTICE
For actuator version "Actuator stem retracts", the diaphragm chamber must be loaded with a pressure that is sufficient to tightly close the valve, even when upstream pressure of the plant prevails.
The upper range value of the reference variable must be 1 bar or 20 mA (direct direction of action >>) and the lower input range value must be 0.2 bar or 4 mA (reverse direction of action <>).

The required signal pressure is roughly calculated in the same way as the required supply pressure according to the equation in section 3.1.2 on page 13.

Starting point (zero)
e.g. 1 bar (20 mA)

1. Adjust input signal to 1 bar (20 mA) using the remote adjuster (ammeter).
2. Turn ZERO adjustment screw (5) until the plug stem just starts to move from its initial position.
3. Increase input signal and slowly reduce it to 1 bar (20 mA). Check if the plug stem begins to move at exactly 1 bar (20 mA).
4. Correct any deviations using the ZERO adjustment screw (5).

Upper range value (travel)
e.g. 0.2 bar (4 mA)

5. After the starting point has been adjusted, set the input signal to 0.2 bar (4 mA) at the remote adjuster (ammeter). The plug stem must stand still at an upper range value of exactly 0.2 bar (4 mA). It must have passed through 100 % travel (observe the travel indicator on the valve!).
6. If the upper range value does not correlate, correct it using the SPAN adjustment screw (8).
   Turning the screw towards the fulcrum of the lever increases the travel, whereas turning it away reduces the travel.

NOTICE
If you change the span, the zero point must be readjusted as well.

7. Check upper range value again. Readjust both values until they are correct.
8. When you have completed the correction work, adjust input signal to 1 bar (20 mA) again.
9. Turn ZERO adjustment screw (5) again until the required signal pressure (section 3.1.2 on page 13) is indicated on a pressure gauge installed in the signal pressure line.

   If no pressure gauge is available, adjust the starting point to 0.97 bar (19.5 mA).

NOTICE
After adjusting the positioner, close the actuator yoke with the cover plate.
Make sure that the vent plug in the cover plate is directed downwards when the control valve is installed in the plant to prevent condensed water from collecting in the positioner.

5 Adjusting the limit switch

The positioner version 3760-X1XXXX is equipped with an inductive limit switch to signal, for example, a travel end position.

The travel of the plug stem is transmitted to the metal tag of the proximity switch over the pin (5) and lever (3).

For operation of the inductive limit switch, a switching amplifier (section 3.2.1) must be connected to the output circuit.

Normally, the limit switch is adjusted to provide a signal when the valve has reached one of its end positions. However, you may also adjust to signal intermediate travel positions.

Adjusting the switching point:

Prior to adjusting the limit switch, the starting point and upper range value of the positioner need to be adjusted.

1. The yellow switching point indicator (7) must be within the area of the notch mark (6). If this is not the case, turn adjustment screw (4).
2. Move control valve to the desired switching position. Turn adjustment screw (4) until the switching point is reached. This will be indicated by the switching amplifier.

The switching element and the levers required to operate it are slightly sensitive to temperature changes. To ensure reliable switching, both the switching hysteresis and the displacement of the switching point due to temperature fluctuations need to be taken into account when adjusting the positioner.

The terminal used to connect the limit switch (41/42 or 51/52) can be written on the adhesive function label inside the positioner cover.

Mark the adjusted switching function, i.e. switching at either open or closed valve on the other label.

5.1 Retrofitting a limit switch

For installation of a limit switch in an i/p positioner (model index .02 and higher; model index .00 and .01 without explosion protection) at a later date, a retrofit kit (order no. 1400-8803) is required.

To retrofit the limit switch, the positioner must be removed from the actuator.

1. Connect the plug of the proximity switch cable to the plug connection (2) located on the PCB.
2. Install support plate (8) on the aluminum plate adjacent to the terminal base using two screws.
3. Attach positioner to the actuator.
4. Fix bracket with pin (5) on the clamp attached to the actuator stem and secure it with screws. Make sure that the pin (5) is located in the recess of the operating lever (3).
5. Connect the switching amplifier to the terminals + and – using cable glands or connectors.
6. Refer to section 5 for adjustment.

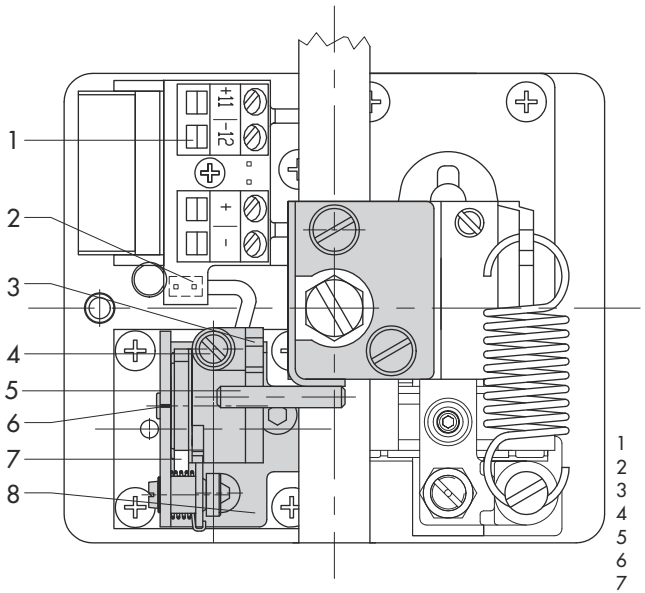

1	Terminal base with PCB
2	Connector
3	Operating lever
4	Adjustment screw
5	Pin
6	Notch mark
7	Switching point indicator
8	Support plate

Fig. 7 · Limit switch, for positioner with left attachment (for right attachment, drawing turned by 180°)

6 Converting the positioner

The positioner can be converted from a pneumatic to an electropneumatic positioner and vice versa using a conversion kit.

In addition to the conversion kit listed in the table on page 21, an i/p module may be required.

6.1 Conversion from pneumatic p/p to electropneumatic i/p

1. Remove screw joint (4) installed in the control signal input (IN SIGNAL 27). Replace it with the plug with seal included in the retrofit kit.
2. Remove plug (1) from the housing and replace it with a cable gland or plug connector.
3. Undo both mounting screws in the housing. Remove connecting plate (2) with seal (3).
4. Unscrew PCB from the terminal base.
5. Insert connecting cable included in the retrofit kit through the terminal base into the housing.
6. Push blue connector into the middle connection. Connect other end to the i/p module (for i/p module 6109, connector with blue – and green +; for i/p module 6112, terminal with blue – and green +).

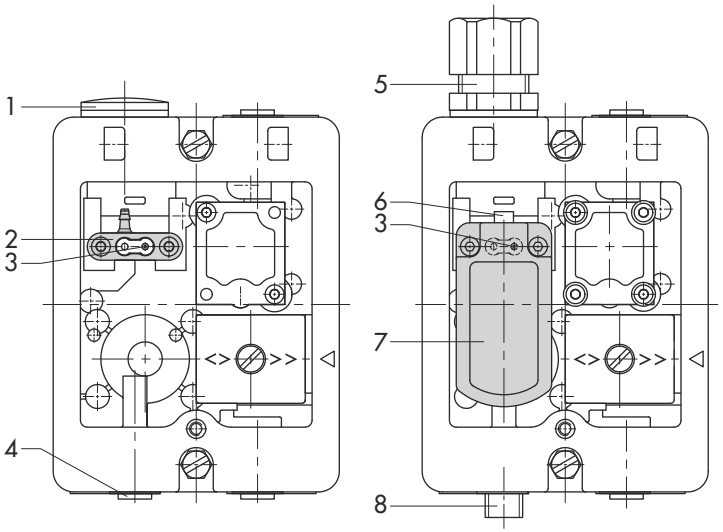

1 Plug
2 Connecting plate
3 Seal
4 Screw joint
5 Cable gland
6 Connector with 6109 i/p module
7 i/p module
8 Plug

Fig. 8 · Converting the positioner

7. Fasten i/p module in the housing using the two screws. Make sure that the seal (3) with the restriction is properly positioned in the module. The restriction must be located over the right bore hole of the housing (looking from above), see Fig. 8.

6.2 Conversion from electropneumatic i/p to pneumatic p/p

1. Remove plug (8) with seal installed in the control signal input (IN SIGNAL 27). Replace it with an appropriate screw gland (5) with G ⅛ or ⅛ NPT thread.
2. Remove mounting screws. After disconnecting the electrical connections, take i/p module (7) out of the housing.
3. Seal holes in the bottom of the housing using the connecting plate (2) containing the seal (3). Make sure that the plate is installed in the correct position (see Fig. 8).
4. Unscrew PCB from the terminal base. Remove blue connector and pull out the connecting cable.
5. Reinstall PCB on the terminal base using screws.

Conversion and retrofit kits		Order numbers
Pneumatic to electropneumatic conversion (model index 01 or higher)		With Type 6109 i/p module [1]
Without limit switch	Order no. 1400-6988	4 to 20 mA without explosion protection **6109-0010**
With limit switch	Order no. 1400-6904	
Pneumatic to electropneumatic conversion (model index 01 or higher)		With Type 6112 i/p module [1]
Without limit switch	Order no. 1400-6989	4 to 20 mA without explosion protection **6112-041110** or 0 to 20 mA without explosion protection **6112-042110**
With limit switch	Order no. 1400-6906	
Electropneumatic to pneumatic conversion		1400-6931
Retrofitting electrical connection with connector acc. to DIN EN 175301 - AF3-Pg 11		1400-6902

[1] The required i/p module with the model number written in **bold** must be ordered separately. It is not included in the conversion kit.

7 Dimensions in mm

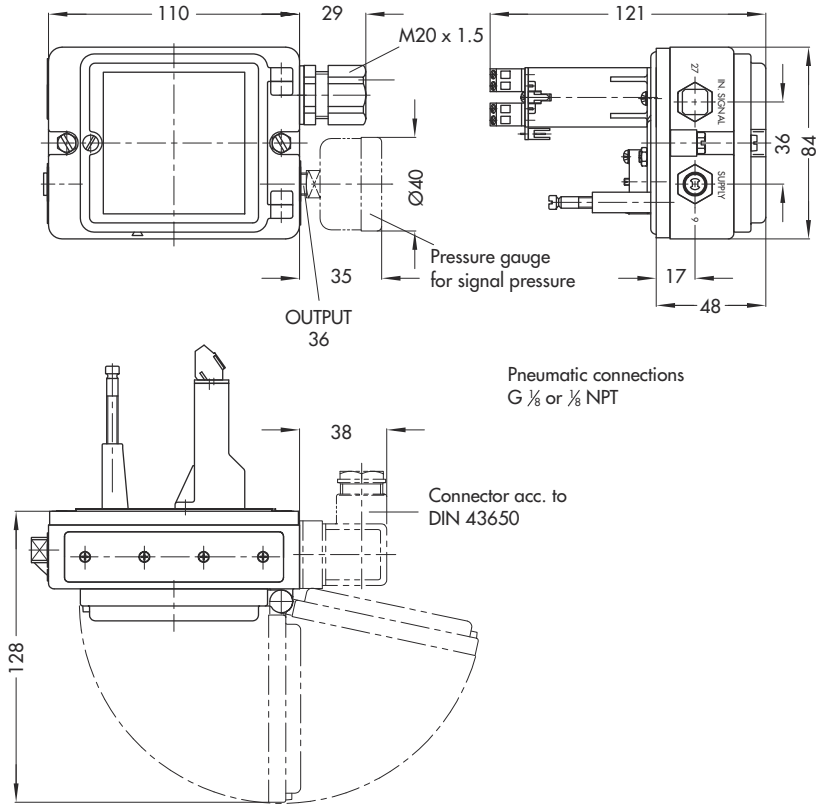

Physikalisch-Technische Bundesanstalt
Braunschweig und Berlin

PTB

TRANSLATION

(1) **EC TYPE EXAMINATION CERTIFICATION**

(2) Equipment and Protective Systems Intended for Use in Potentially Explosive Atmospheres – **Directive 94/9/EC**

(3) EC Type Examination Certificate Number

PTB 02 ATEX 2076

(4) Equipment: Model 3760-1.. I/P Positioner

(5) Manufacturer: SAMSON AG, Mess- und Regeltechnik

(6) Address: Weismüllerstr. 3, D-60314 Frankfurt, Germany

(7) This equipment and any acceptable variations thereof are specified in the schedule to this certificate.

(8) The Physikalisch-Technische Bundesanstalt, notified body number 0102 in according to Article 9 of the Council Directive 94/9/EC of 23 March 1994, certifies that this equipment has been found to comply with the Essential Health and Safety Requirements relating to the design and construction of equipment and protective systems intended for use in potentially explosive atmospheres as specified in Annex II to the Directive.

The examination and test results are recorded in confidential report **PTB-Ex 02-22052.**

(9) The Essential Health and Safety Requirements are satisfied by compliance with

EN 50014: 1997+A1+A2 **EN 50020: 1994**

(10) If the sign "X" is placed after the certificate number, it indicates that the equipment is subject to special conditions for safe use specified in the schedule to this certificate.

(11) Accroding to the Directive 94/9/EC, this EC TYPE EXAMINATION CERTFICATE relates only to the design and construction of the specified equipment. If applicable, further requirements of this Directive apply to the manufacture and supply of the equipment.

EC Type Examination Certificates without signature and seal are invalid.
This EC Type Examination Certificate may only be reproduced in its entirety and without any changes, schedule included.
Extracts or changes shall require the prior approval of the Physikalisch-Technische Bundesanstalt.

Physikalisch-Technische Bundesanstalt
Braunschweig und Berlin

PTB

(12) The marking of the equipment shall include the following:

II 2 G EEx ia IIC T6

Zertifizierungsstelle Explosionsschutz Braunschweig,18. July 2002
By order

(Signature) (Seal)

Dr. Ing. U. Johannsmeyer
Regierungsdirketor

EC Type Examination Certificates without signature and seal are invalid.
This EC Type Examination Certificate may only be reproduced in its entirety and without any changes, schedule included.
Extracts or changes shall require the prior approval of the Physikalisch-Technische Bundesanstalt.

Physikalisch-Technische Bundesanstalt
Braunschweig und Berlin

PTB

(12) The marking of the equipment shall include the following:

II 2 G EEx ia IIC T6

Zertifizierungsstelle Explosionsschutz Braunschweig,18. July 2002
By order

(Signature) (Seal)

Dr. Ing. U. Johannsmeyer
Regierungsdirketor

EC Type Examination Certificates without signature and seal are invalid.
This EC Type Examination Certificate may only be reproduced in its entirety and without any changes, schedule included.
Extracts or changes shall require the prior approval of the Physikalisch-Technische Bundesanstalt.

Physikalisch-Technische Bundesanstalt
Braunschweig und Berlin

PTB

(13) **S c h e d u l e**

(14) **EC TYPE EXAMINATION CERTIFICATE No. PTB 02 ATEX 2076**

(15) **Description of Equipment**

The Model 3760-1.. I/P Positioner is a modular unit intended for attachment to pneumatic control valves. It serves for converting control signals of (0)4...20 mA and/or 1...5 mA from a controlling system into a pneumatic supply pressure of 6 bar max. For auxiliary power non-combustible media are used.

The i/p converter circuit and the contact circuit are passive two-terminal networks which any be connected to any certified intrinsically safe circuits, provided the permissible maximum values of Ui, Ii and Pi are not exceeded.

The device is intended for use inside and outside of hazardous locations.

The correlation between version, temperature classification, permissible ambient temperature ranges and maximum short-circuit currents is shown in the table below:

Version 3760-1...1. with Model 6109 I/P Module

Temperature class	Permissible ambient temperature range	Maximum short-circuit current
T6	-45 °C ... 60 °C	85 mA
T5	-45 °C ... 70 °C	
T4	-45 °C ... 80 °C	
T5	-45 °C ... 70 °C	100 mA
T4	-45 °C ... 80 °C	

Version 3760-1...2. with Model 6112 I/P Module

Temperature class	Permissible ambient temperature range	Maximum short-circuit current
T6	-45 °C ... 60 °C	85 mA or
T5	-45 °C ... 70 °C	100 mA
T4	-45 °C ... 80 °C	120 mA

EC Type Examination Certificates without signature and seal are invalid.
This EC Type Examination Certificate may only be reproduced in its entirety and without any changes, schedule included.
Extracts or changes shall require the prior approval of the Physikalisch-Technische Bundesanstalt.

Physikalisch-Technische Bundesanstalt **PTB**

Braunschweig und Berlin

The correlation between temperature classification, permissible ambient temperature ranges, maximum short-circuit currents and power for analysers is shown in the table below:

Temperature class	Permissible ambient temperature range	I_o/P_o
T6	-45 °C ... 45 °C	52 mA / 169 mW
T5	-45 °C ... 60 °C	
T4	-45 °C ... 70 °C	
T6	-45 °C ... 60 °C	25 mA / 64 mW
T5	-45 °C ... 80 °C	
T4	-45 °C ... 80 °C	

(16) **Test Report PTB Ex 02-22052**

(17) **Special conditions for safe use**

None

(18) **Essential Health and Safety Requirements**

In compliance with the standards specified above.

Zertifizierungsstelle Explosionsschutz Braunschweig, 19. July 2002
By order

(Signature) (seal)

Dr. Ing. U. Johannsmeyer
Regierungsdirektor

EC Type Examination Certificates without signature and seal are invalid.
This EC Type Examination Certificate may only be reproduced in its entirety and without any changes, schedule included.
Extracts or changes shall require the prior approval of the Physikalisch-Technische Bundesanstalt.

Physikalisch-Technische Bundesanstalt
Braunschweig und Berlin

PTB

TRANSLATION

(1) **Statement of Conformity**

(2) Equipment and Protective Systems Intended for Use in Potentially Explosive Atmospheres – **Directive 94/9/EC**

(3) EC Type Examination Certificate Number

PTB 03 ATEX 2181 X

(4) Equipment: Model 3760-8.. I/P Positioner

(5) Manufacturer: SAMSON AG Mess- und Regeltechnik

(6) Address: Weismüllerstr. 3,
60314 Frankfurt am Main, Germany

(7) The equipment and any acceptable variation thereof are specified in the schedule to this certificate and the documents referred to therein.

(8) The Physikalisch-Technische Bundesanstalt, notified body number 0102 according to Article 9 of the Council Directive 94/9/ of 23 March 1994, certifies that this equipment has been found to comply with the essential health and safety requirements relating to the design and construction of equipment and protective systems intended for use in potentially explosive atmospheres specified in Annex II to the Directive.

The examination and test results are recorded in confidential report.

PTB Ex 03-23302

(9) The essential health and safety requirements are satisfied by compliance with

EN 50021: 1999

(10) If the sign "X" is placed after the certificate number, it indicates that the equipment is subject to special conditions for safe use as specified in the schedule to this certificate.

(11) In compliance with the Directive 94/9/EC this Statement of Conformity relates only to the design and construction of the equipment specified. Further requirements of this Directive apply to manufacture and marketing of this equipment.

Statements of Conformity without signature and seal are invalid.
This Statement of Conformity may be reproduced only in its entirety without any changes.
Extracts or changes shall require the prior approval of the Physikalisch-Technische Bundesanstalt.

Physikalisch-Technische Bundesanstalt
Braunschweig und Berlin

PTB

(12) The marking of the equipment shall include the following:

Ex **II 3G EEx nA II T6**

Zertifizierungsstelle Explosionsschutz Braunschweig, 30. September 2003
By order

(Signature) (Seal)

Dr. Ing. U. Johannsmeyer
Regierungsdirketor

Statements of Conformity without signature and seal are invalid.
This Statement of Conformity may be reproduced only in its entirety without any changes.
Extracts or changes shall require the prior approval of the Physikalisch-Technische Bundesanstalt.

Physikalisch-Technische Bundesanstalt Bundesallee 100 D-38116 Braunschweig
PTB28Ex n.doc

13) **S c h e d u l e**

(14) **Statement of Conformity PTB 03 ATEX 2181 X**

(15) **Description of Equipment**

The model 3760-8.. Positioner is a modular unit intended for attachment to pneumatic control valves. It serves for converting control signals of (0) 4...20 mA and/or 1...5mA from a controlling system into a pneumatic supply pressure of 6 bar max.

For instrument air non-combustible media are used.

The devices is intended for use inside and outside of hazardous areas.

The correlation between temperature classification and the permissible ambient temperature ranges is shown in the table below:

Temperature class	Permissible ambient temperature range
T6	-45 °C ... 60 °C
T5	-45 °C... 70 °C
T4	-45 °C ... 80 °C

Electrical data

Signal circuit (terminals 11/12)	Type of protection EEx nA II
Inductive limit switch	Type of protection EEx nA II

(16) **Test report PTB Ex 03-23302**

(17) **Special conditions for safe use**

The signal circuit (terminals 11/12) shall be preceded by a fuse installed outside of the hazardous location. This fuse shall comply with IEC 60127-2/II, 250 V F or with IEC 60127-2/VI, 250 V T with a maximum fuse nominal current IN ≤ 50 mA.

Statements of Conformity without signature and seal are invalid.
This Statement of Conformity may be reproduced only in its entirety without any changes.
Extracts or changes shall require the prior approval of the Physikalisch-Technische Bundesanstalt.

Physikalisch-Technische Bundesanstalt Bundesallee 100 D-38116 Braunschweig

Physikalisch-Technische Bundesanstalt
Braunschweig und Berlin

The cable entries of the enclosure of the Model 3760-8.. Positioner shall provide at least Degree of protection IP 54 in compliance with EN 60529.

The wiring shall be connected in such a manner that the connection facilities are not subjected to pull and twisting.

(18) **Basis health and safety requirements**

Are satisfied by compliance with the standard specified above.

Zertifizierungsstelle Explosionsschutz Braunschweig, 30. September 2003
By order

(Signature) (seal)

Dr.-Ing. U. Johannsmeyer
Regierungsdirektor

Statements of Conformity without signature and seal are invalid.
This Statement of Conformity may be reproduced only in its entirety without any changes.
Extracts or changes shall require the prior approval of the Physikalisch-Technische Bundesanstalt.

Physikalisch-Technische Bundesanstalt Bundesallee 100 D-38116 Braunschweig

PTB28Ex n.doc

Manufacturer Declaration

made out to:

BASF Aktiengesellschaft, Carl-Bosch-Str. 38, D- 67056 Ludwigshafen

types:

Pepperl+Fuchs GmbH, Mannheim *declares in its sole* responsibility that the products named beside were manufactured following the standard EN 50 021: 1999..

inductive sensors FJ..., NB..., NC...,NJ..., RG..., RJ..., TG..., SC..., SJ...
capacitive sensors CB..., CC..., CJ...

Applies only to sensors that have an EC-Type Examination Certificate according Directive 94/9/EC category 2G or 1G.

Pepperl+Fuchs GmbH Mannheim declares in its sole responsibility that the above mentioned sensors are according to the requirements of Zone 2.
The type of protection is

⟨Ex⟩ II 3G EEx nL IIC T6

conform to standard: EN50021:1999
In deviation to this standard the sensors are not marked with **⟨Ex⟩ II 3G EEx nL IIC T6**.
The sensors are marked according to the EC-Type Examination Certificate category 2G or 1G.

The sensors have to be connected to energy-limited circuits only with type of protection **EEx nL**.
The values of the equivalent internal reactances C_i and L_i and the maximum permissible ambient temperature are given in the EC-Type Examination Certificate category 2G.

The maximum permissible ambient temperature has to be taken from the temperature table, which is subdivided into different types and temperature classes, of the assigned EC-Type Examination Certificate.
The maximum input values U_i, I_i, P_i are given in the following table (type 4 only if this type is listed in the assigned EC-Type Examination Certificate).

	type 1	type 2	type 3	type 4
U_i	20V	20V	20V	20V
I_i	25 mA	25 mA	52 mA	76 mA
P_i	34 mW	64 mW	169 mW	242 mW

The special conditions of the EC-Type Examination Certificate category 2G and the instructions according category 2G have to be taken into account.

For use according to Directive 94/9/EC within the European Community this manufacturer declaration is not sufficient, because the following requirements of the Directive 94/9/EC are not met: marking on the sensor, instruction, declaration of conformity.

Reg.-Nr. 14 760-02

Pepperl+Fuchs Mannheim is subject to the rules of a
quality management system according to DIN EN ISO 9001

Signature of Manufacturer:
Function of the signer:

i.V. Ehrenfried
head of R&D EMS
factory automation

i.A. Wanninger
standards expert
factory automation

date: 2003-03-14

Installation Manual for apparatus certified by CSA for use in hazardous locations.

Electrical rating of intrinsically safe apparatus and apparatus for installation in hazardous locations.

Table 1: Maximum values

	U_i or V_{max}	I_i or I_{max}	P_i or P_{max}	C_i	L_i
Signal circuit	28V	115mA	0,7W	0 nF	0 µH
Limit switch	16V	25/52mA	64/169mW	30 nF	100 µH

U_o or $V_{OC} \leq U_i$ or V_{max} / I_o or $I_{OC} \leq I_i$ or I_{max} / $P_o \leq P_i$ or P_{max}; $C_a \geq C_i$ and $L_a \geq L_i$

Table 2: CSA – certified barrier parameters of signal circuit

Barrier	Supply barrier		Evaluation barrier	
	V_{max}	R_{min}	V_{max}	
Signal circuit	≤ 28V	≥ 280Ω	≤ 28V	Diode Return

Table 3: The correlation between temperature classification and permissible ambient temperature ranges is shown in the table below:

Temperature class	Permissble ambient temperature range
T6	- 40°C ... 60°C
T5	- 40°C ... 70°C
T4	- 40°C ... 80°C

Table 4: For the Model 3760– 31 Positioner the correlation between temperature classification, permissible ambient temperature ranges and maximum short- circuit current is shown in the table below:

Temperature class	Permissible ambient temperature range	Maximum short-circuit current
T6	- 40°C ... 45°C	
T5	- 40°C ... 60°C	52mA
T4	- 40°C ... 75°C	
T6	- 40°C ... 60°C	
T5	- 40°C ... 80°C	25mA
T4	- 40°C ... 80°C	

Intrinsically safe if installed as specified in manufacturer's installation manual.

CSA- certified for hazardous locations

Ex ia IIC T6; Class I, Zone 0
Class I; Groups A, B, C, D;
Class II; Groups E, F + G, Class III **Type 3 Enclosure**

Notes:
1.) The installation shall be in accordance with the Canadian Electrical Code Part 1.

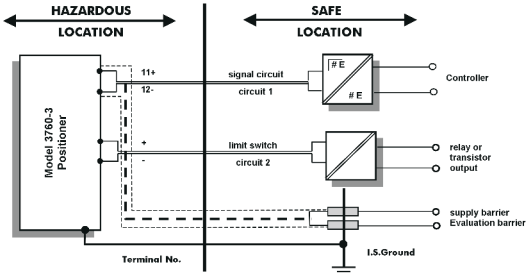

Version: Model 3760-31 with inductive limit switch.

Relay or transistor output resp. CSA certified.

Supply and evaluation barrier CSA- certified

For the permissible maximum values for the intrinsically safe circuits see Table 1

Cable entry M 20 x 1.5 or metal conduit according to drawing No. 1050 – 0539 T or 1050 – 0540 T

On interconnection to form ground- free signal circuits, only evaluation barriers shall be installed in the return line. Correct polarity must be ensured.

CSA- certified for hazardous locations

Class I; Div. 2, Groups A, B, C, D
Class II; Div. 2, Groups E, F + G, Class III **Type 3 Enclosure**

Positioner with limit switch.

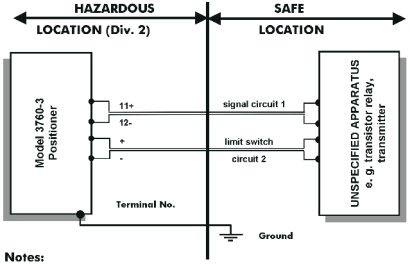

Notes:

1.) The installation shall be in accordance with the Canadian Electrical Code Part 1.

2.) For the maximum values for the individual circuits see Table 1 and 2.

3.) The cables shall be protected by conduits.

4.) Cable entry only rigid metal conduit according to drawing No. 1050-0539 T and 1050-0540 T

Installation drawing Control Relay KHA5-OTI/Ex2, KHA6-OTI/Ex1 or KHA6-OTI/Ex2 with Model 5J-b-N Proximity Sensors

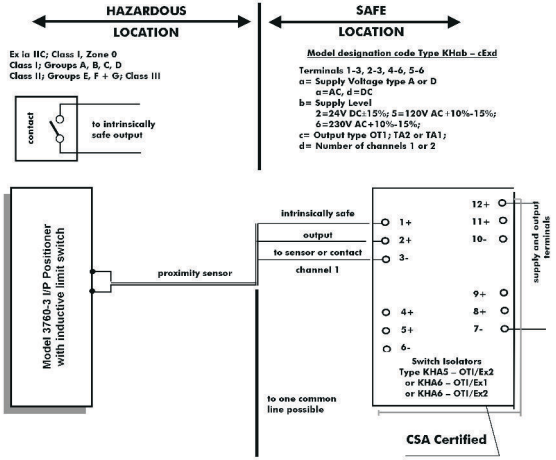

The total series inductance and shunt capacitance of shield wiring shall be restricted to the following maximum values

maximum capacitance of each inductive sensor 30nF
maximum inductance of each inductive sensor 100µH

System parameters

Control Relay Terminal No.	Groups	L [mH]	C [µF]	Voc [V]	Isc [mA]	Vmax [V]	Rmin [Ω]
1-3; 2-3 4-6; 5-6	A + B	84.88	1.273	↑	↑	↑	↑
	C + D	298.7	3.82	12.6	19.8	12.6	650
	E, F, G	744.4	10.18	↓	↓	↓	↓

Division 2 wiring method shall be in accordance to the Canadian Electrical Code Part 1.

Installation Manual for apparatus approved by FM for use in hazardous locations

Electrical ratings of intrinsically safe apparatus and apparatus for installation in hazardous locations.

Table 1: Maximum values

	U_i or V_{max}	I_i or I_{max}	P_i or P_{max}	C_i	L_i
Signal circuit	28V	115mA	0,7W	0nF	0 µH
Limit switch (inductive)	16V	25/52mA	64/169mW	30nF	100 µH

Notes: U_o or V_{OC} or $V_t \leq U_i$ or V_{max} / I_o or I_{OC} or $I_t \leq I_i$ or I_{max}
P_o or $P_{max} \leq P_i$ or P_{max}

Table 2: CSA/FM - approved barrier parameters of signal circuit

Barrier	Supply barrier				Evaluation barrier		
	V_{OC}	R_{min}	I_{OC}	P_{max}	V_{OC}	R_{min}	I_{OC}
Signal circuit	≤ 28V	≥ 280Ω	≤ 115mA	≤ 0,7W	≤ 28V	#	0mA

Table 3: For the Signal circuit the correlation between temperature classification and permissible ambient temperature ranges is shown in the table below:

Temperature class	Permissible ambient temperature range
T6	60 °C
T5	- 40 °C ≤ ta ≤ 70 °C
T4	80 °C

Table 4: For the Inductive limit switch circuit of Model 3760– 31 Positioner, the correlation between temperature classification, permissible ambient temperature ranges and maximum short- circuit current is shown in the table below:

Temperature class	Permissible ambient temperature range	Maximum short-circuit current
T6	45 °C	52mA
T5	- 40 °C ≤ ta ≤ 60 °C	
T4	75 °C	
T6	60 °C	25mA
T5	- 40 °C ≤ ta ≤ 80 °C	
T4	80 °C	

WARNING! In hazardous areas, make sure to install and service the device in such a way that electrostatic charging cannot take place.

FM- approved for hazardous locations

Class I, Zone 0 A Ex ia IIC T6 **NEMA Type 3R**
Class I, II, III Division 1, Groups A, B, C, D; E, F + G

Notes:

1.) The apparatus may be installed in intrinsically safe circuits only when used in conjunction with the FM approved apparatus. For maximum values of U_i or V_{max} ; I_i or I_{max}; P_i or P_{max} ; C_i and L_i of the various apparatus see Table 1.

2.) The apparatus may be installed in intrinsically safe circuits only when used in conjunction with the FM approved intrinsically safe barrier. For barrier selection see Table 2.

3.) Installation shall be in accordance with the National Electrical Code ANSI/NFPA 70 and ANSI/ISA RP 12.06.01

4.) Use only supply wires suitable for 5°C above surrounding temperature.

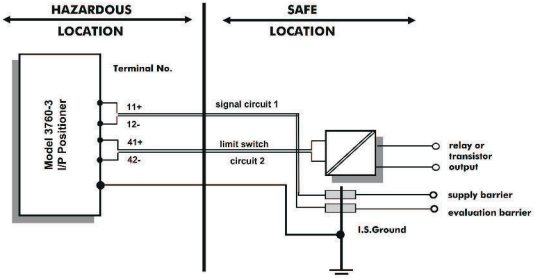

Version: Model 3760-31 with limit switch.

For the permissible maximum values for the intrinsically safe circuits see Table 1

Cable entry M 20 x 1.5 or metal conduit according to drawing No. 1050 – 0539 T or 1050 – 0540 T

FM- approved for hazardous locations

Class I, Division 2, Groups A, B, C, D
Class II Division 2, Groups F + G; Class III

NEMA Type 3R

Positioner with limit switch.

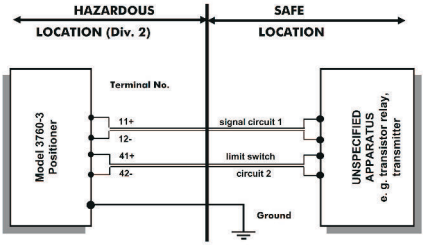

Notes:

1.) For the maximum values for the individual circuits see Table 1, 2 and 4.

2.) Cable entry only rigid metal conduit according to drawing No. 1050-0539 T and 1050-0540 T

3.) The installation shall be in accordance with the National Electrical Code ANSI/NFPA 70

Installation drawing Control Relay Hab – cEx de with Model SJ-b-N

Proximity Sensors

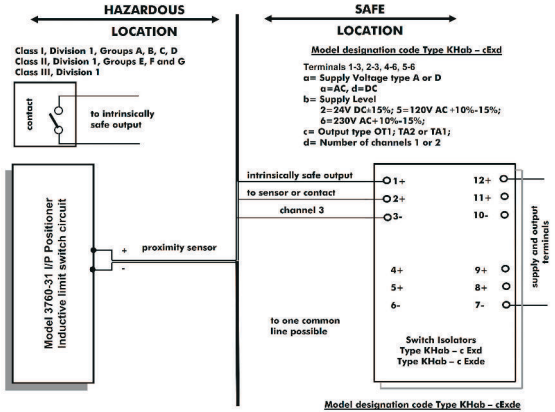

Model designation code Type KHab – cExde

a= Supply Voltage type A or D
a=AC, d=DC
b= Supply Level
2=24V DC±15%; 5=120V AC +10%-15%;
6=230V AC+10%-15%;
c= Output type RTA/; RW1/; SS1/; SS2/; RS1/; SR/; ST- or SOT
d= Number of channels 1 or 2
e= Power rail designation, P, 2S.P or GS.P (includes Model KHD2-EB-PB Power Feed Module) or Blank

maximum capacitance of each inductive sensor 30nF
maximum inductance of each inductive sensor 100µH

The total series inductance and shunt capacitance of shield wiring shall be restricted to the following maximum values

Control Relay Terminal No.	Groups	L [mH]	C [µF]	VOC [V]	ISC [mA]
1-3; 2-3 4-6; 5-6	A + B	84,8	1,27	12,9	19,8
	C + E	299	3,82		
	D, F, G	744	10,2		

SAMSON AG · MESS- UND REGELTECHNIK
Weismüllerstraße 3 · 60314 Frankfurt am Main · Germany
Phone: +49 69 4009-0 · Fax: +49 69 4009-1507
Internet: http://www.samson.de

EB 8385 EN 2019-03