TI01579D/06/EN/03.25-00
71758367
2026-07-01

Technical Information
Proline Promag P 10

Electromagnetic flowmeter



Flowmeter for basic process applications with easy-to-use operation concept

Application

- The bidirectional measuring principle is virtually independent of pressure, density, temperature and viscosity
- Specially for chemical and process applications with corrosive liquids

Device properties

- Nominal diameter: max. DN 600 (24")
- All common Ex approvals
- Liner made of PTFE or PFA
- System integration with HART, Modbus RS485, IO-Link
- Flexible operation with app and optional display

Your benefits

- Easy integration into your plant infrastructure with IO-Link protocol
- Diverse applications – wide variety of wetted materials
- Energy-saving flow measurement – no pressure loss due to cross section constriction
- Maintenance-free – no moving parts
- Optimum usability – operation with mobile devices and SmartBlue app or display with touchscreen
- Simple, time-saving commissioning – guided parameterization in advance and in the field
- Built-in verification – Heartbeat Technology

Endress+Hauser
People for Process Automation

Table of contents

About this document 4
Symbols 4
Related documentation 4
Ordering information 4
Registered trademarks 6

Function and system design 8
Measuring principle 8
Product design 8
IT security 9
Device-specific IT security 10

Input 12
Measured variable 12
Operable flow range 12
Measuring range 12

Output 16
Output versions 16
Output signal 16
Signal on alarm 19
Low flow cut off 19
Ex connection data 19
Galvanic isolation 19
Protocol-specific data 20

Power supply 24
Terminal assignment 24
Supply voltage 24
Power consumption 25
Current consumption 25
Power supply failure 25
Electrical connection 25
Potential equalization 29
Terminals 31
Cable entries 31
Overvoltage protection 32

Cable specifications 34
Requirements for connecting cable 34
Ground cable requirements 34
Connecting cable requirements 34

Performance characteristics 38
Reference operating conditions 38
Maximum measurement error 38
Repeatability 39
Influence of ambient temperature 39

Installation 42
Installation conditions 42

Environment 50
Ambient temperature range 50
Storage temperature 50
Relative humidity 50
Operating height 50
Degree of protection 50
Vibration resistance and shock resistance 50
Electromagnetic compatibility (EMC) 51

Process 54
Medium temperature range 54
Conductivity 55
Flow limit 55
Pressure/temperature ratings 56
Pressure tightness 58
Pressure loss 59

Mechanical construction 62
Weight 62
Measuring pipe specification 63
Materials 64
Fitted electrodes 65
Surface roughness 65

Dimensions in SI units 68
Compact version 68
Remote version 71
Fixed flange 73
Lap joint flange 83
Lap joint flange, stamped plate 86
Accessories 87

Dimensions in US units 90
Compact version 90
Remote version 93
Fixed flange 95
Lap joint flange 96
Accessories 97

Local display 100
Operation concept 100
Operation options 101
Operating tools 101

Certificates and approvals 104
Ex approval 104
Non-Ex approval 104
Pressure Equipment Directive 104
HART certification 104
Radio approval 104
Additional approvals 104
Additional certification 104
External standards and guidelines 105

Application packages 108
Use 108
Heartbeat Verification + Monitoring 108

Accessories 110
Device-specific accessories 110
Communication-specific accessories 111
Service-specific accessory 112
System components 112

About this document

Symbols 4
Related documentation 4
Ordering information 4
Registered trademarks 6

Symbols

Electronics

⎓ Direct current

~ Alternating current

⎓~ Direct current and alternating current

⏚ Terminal connection for potential equalization

Device communication

Communication via a wireless, local area network.

Bluetooth is enabled.

Types of information

✓✓ Preferred procedures, processes or actions

✓ Permitted procedures, processes or actions

✗ Forbidden procedures, processes or actions

Additional information

Reference to documentation

Reference to page

Reference to graphic

Explosion protection

Hazardous area

Non-hazardous area

Related documentation

Technical information	Overview of the device with the most important technical data.
Operating instructions	All the information that is required in the various phases of the life cycle of the device: from product identification, incoming acceptance and storage, to mounting, connection, operation and commissioning through to troubleshooting, maintenance and disposal as well as the technical data and dimensions.
Sensor Brief Operating Instructions	Incoming acceptance, transport, storage and mounting of the device.
Transmitter Brief Operating Instructions	Electrical connection and commissioning of the device.
Description of Parameters	Detailed explanation of the menus and parameters.
Safety Instructions	Documents for the use of the device in hazardous areas.
Special Documentation	Documents with more detailed information on specific topics.
Installation Instructions	Installation of spare parts and accessories.

The device documentation is available online on the device product page and in the Downloads area: www.endress.com

Ordering information

Detailed ordering information is available from your nearest sales organization www.addresses.endress.com or in the Product Configurator at www.endress.com:

1. Select the product using the filters and search field.

2. Open the product page.
3. Select **Configuration**.

Product Configurator - the tool for individual product configuration
- Up-to-the-minute configuration data
- Depending on the device: direct input of information specific to the measuring point, such as the measuring range or operating language
- Automatic verification of exclusion criteria
- Automatic creation of the order code and its breakdown in PDF or Excel output format
- Ability to order directly in the Endress+Hauser Online Shop

Registered trademarks

HART®
Registered trademark of the FieldComm Group, Austin, Texas USA

Modbus®
Registered trademark of SCHNEIDER AUTOMATION, INC.

IO-Link®
Is a registered trademark. It may only be used in conjunction with products and services by members of the IO-Link Community or by non-members who hold an appropriate license. For more specific guidelines on use, refer to the IO-Link Community rules on: www.io-link.com.

Bluetooth®
The Bluetooth word mark and Bluetooth logos are registered trademarks of Bluetooth SIG. Inc. and any use of such marks by Endress+Hauser is under license. Other trademarks and trade names are those of their respective owners.

Apple®
Apple, the Apple logo, iPhone, and iPod touch are trademarks of Apple Inc., registered in the U.S. and other countries. App Store is a service mark of Apple Inc.

Android®
Android, Google Play and the Google Play logo are trademarks of Google Inc.

Function and system design

Measuring principle 8
Product design 8
IT security 9
Device-specific IT security 10

Measuring principle

According to *Faraday's law of magnetic induction*, a voltage is induced in a conductor moving through a magnetic field.

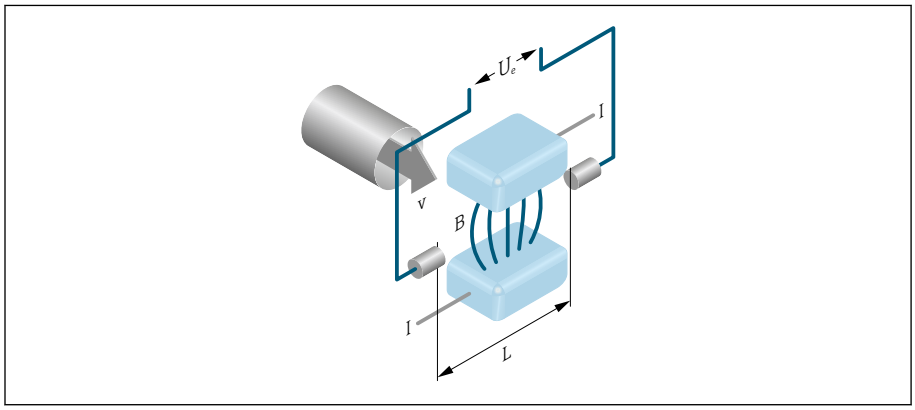

A0028962

Ue Induced voltage
B Magnetic induction (magnetic field)
L Electrode spacing
I Current
v Flow velocity

In the electromagnetic measuring principle, the flowing medium is the moving conductor. The induced voltage (U_e) is proportional to the flow velocity (v) and is transmitted to the amplifier via the working electrodes. The flow volume (Q) is calculated via the pipe cross-section (A). The DC magnetic field is generated by a switched direct current of alternating polarity.

Formulae for calculation

- Induced voltage $U_e = B \cdot L \cdot v$
- Volume flow $Q = A \cdot v$

Product design

The device consists of a transmitter and a sensor.

Two device versions are available:

- Compact version – transmitter and sensor form a mechanical unit.
- Remote version - transmitter and sensor are mounted in separate locations.

Compact version

The transmitter and sensor form a mechanical unit.

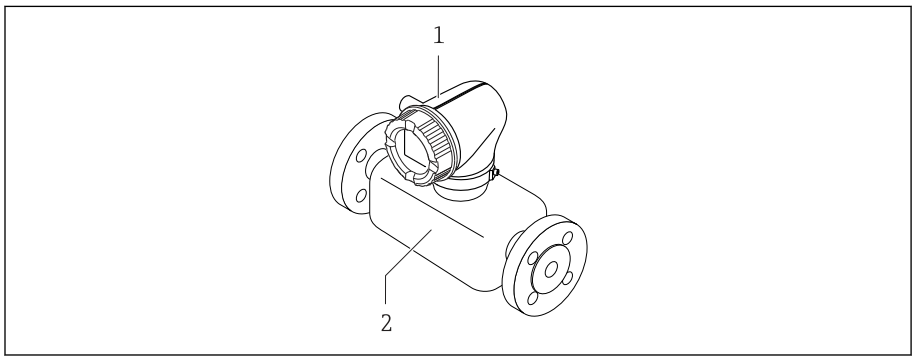

A0008262

1 Transmitter
2 Sensor

Remote version

The transmitter and sensor are mounted in physically separate locations.

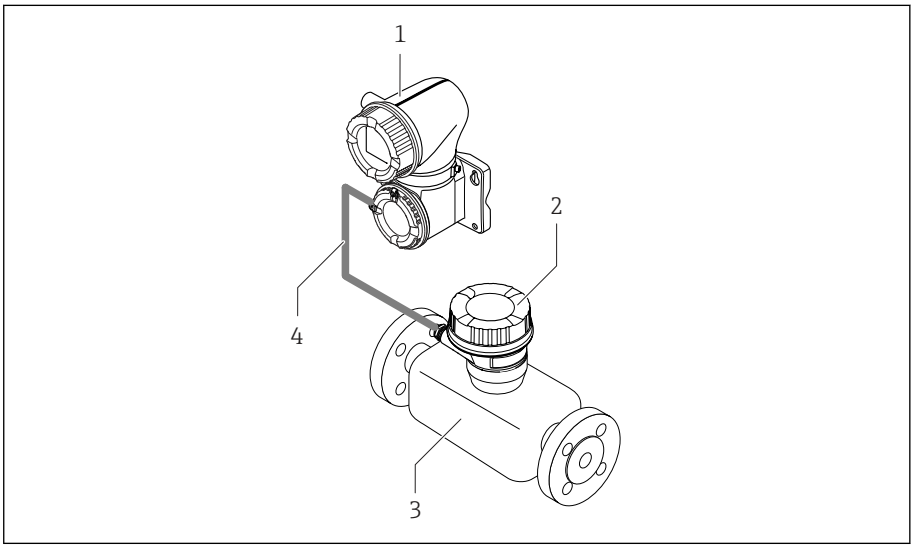

A0028196

1 *Transmitter*
2 *Sensor connection housing*
3 *Sensor*
4 *Connecting cable*

Measuring system

Proline 10 transmitter	Promag P sensor
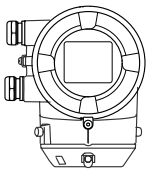 Compact version 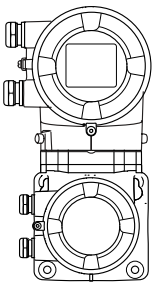 Remote version	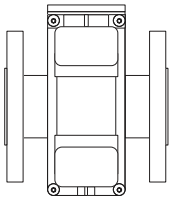

IT security

We only provide a warranty if the device is installed and used as described in the Operating Instructions. The device is equipped with security mechanisms to protect it against any inadvertent changes to the device settings.

IT security measures in line with operators' security standards and designed to provide additional protection for the device and device data transfer must be implemented by the operators themselves.

Device-specific IT security

Access via Bluetooth

Secure signal transmission via Bluetooth uses an encryption method tested by the Fraunhofer Institute.

- Without the SmartBlue App, the device is not visible via Bluetooth.
- Only one point-to-point connection is established between the device and a smartphone or tablet.

Access via the SmartBlue App

Two access levels (user roles) are defined for the device: the **Operator** user role and the **Maintenance** user role. The **Maintenance** user role is configured when the device leaves the factory.

If a user-specific access code is not defined (in the Enter access code parameter), the default setting **0000** continues to apply and the **Maintenance** user role is automatically enabled. The device's configuration data are not write-protected and can be edited at all times.

If a user-specific access code has been defined (in the Enter access code parameter), all the parameters are write-protected. The device is accessed with the **Operator** user role. When the user-specific access code is entered a second time, the **Maintenance** user role is enabled. All parameters can be written to.

For detailed information, see the "Description of Device Parameters" document pertaining to the device.

Protecting access via a password

There are a variety of ways to protect against write access to the device parameters:

- User-specific access code:
  Protect write access to the device parameters via all the interfaces.
- Bluetooth key:
  The password protects access and the connection between an operating unit, e.g. a smartphone or tablet, and the device via the Bluetooth interface.

General notes on the use of passwords

- The access code and Bluetooth key that are valid when the device is delivered must be redefined during commissioning.
- Follow the general rules for generating a secure password when defining and managing the access code and Bluetooth key.
- The user is responsible for the management and careful handling of the access code and Bluetooth key.

Write protection switch

The entire operating menu can be locked via the write protection switch. The values of the parameters cannot be changed. Write protection is disabled when the device leaves the factory.

Write protection is enabled with the write protection switch on the back of the display module.

Input

Measured variable 12
Operable flow range 12
Measuring range 12

Measured variable

Direct measured variables	▪ Volume flow (proportional to induced voltage) ▪ Conductivity (order code for "Sensor option", option CX)
Calculated measured variables	Mass flow

Operable flow range

Over 1000 : 1

Measuring range

Typically v = 0.01 to 10 m/s (0.03 to 33 ft/s) with specified measuring accuracy

Electrical conductivity:
- ≥ 5 µS/cm for liquids in general
- ≥ 20 µS/cm for demineralized water

Flow characteristic values in SI units: DN 15 to 125 (½ to 4")

Nominal diameter		Recommended flow	Factory settings		
		min./max. full scale value (v ~ 0.3/10 m/s)	Full scale value current output (v ~ 2.5 m/s)	Pulse value (~ 2 pulse/s)	Low flow cut off (v ~ 0.04 m/s)
[mm]	[in]	[dm³/min]	[dm³/min]	[dm³]	[dm³/min]
15	½	4 to 100	25	0.2	0.5
25	1	9 to 300	75	0.5	1
32	–	15 to 500	125	1	2
40	1 ½	25 to 700	200	1.5	3
50	2	35 to 1 100	300	2.5	5
65	–	60 to 2 000	500	5	8
80	3	90 to 3 000	750	5	12
100	4	145 to 4 700	1200	10	20
125	–	220 to 7 500	1850	15	30

Flow characteristic values in SI units: DN 150 to 600 (6 to 24")

Nominal diameter		Recommended flow	Factory settings		
		min./max. full scale value (v ~ 0.3/10 m/s)	Full scale value current output (v ~ 2.5 m/s)	Pulse value (~ 2 pulse/s)	Low flow cut off (v ~ 0.04 m/s)
[mm]	[in]	[m³/h]	[m³/h]	[m³]	[m³/h]
150	6	20 to 600	150	0.03	2.5
200	8	35 to 1 100	300	0.05	5
250	10	55 to 1 700	500	0.05	7.5
300	12	80 to 2 400	750	0.1	10
350	14	110 to 3 300	1 000	0.1	15
400	16	140 to 4 200	1 200	0.15	20
450	18	180 to 5 400	1 500	0.25	25
500	20	220 to 6 600	2 000	0.25	30
600	24	310 to 9 600	2 500	0.3	40

Flow characteristic values in US units: ½ - 24" (DN 15 - 600)

Nominal diameter		Recommended flow	Factory settings		
		min./max. full scale value (v ~ 0.3/10 m/s)	Full scale value current output (v ~ 2.5 m/s)	Pulse value (~ 2 pulse/s)	Low flow cut off (v ~ 0.04 m/s)
[in]	[mm]	[gal/min]	[gal/min]	[gal]	[gal/min]
½	15	1.0 to 27	6	0.1	0.15
1	25	2.5 to 80	18	0.2	0.25
1 ½	40	7 to 190	50	0.5	0.75
2	50	10 to 300	75	0.5	1.25
3	80	24 to 800	200	2	2.5
4	100	40 to 1250	300	2	4
6	150	90 to 2650	600	5	12
8	200	155 to 4850	1200	10	15
10	250	250 to 7500	1500	15	30
12	300	350 to 10600	2400	25	45
14	350	500 to 15000	3600	30	60
16	400	600 to 19000	4800	50	60
18	450	800 to 24000	6000	50	90
20	500	1000 to 30000	7500	75	120
24	600	1400 to 44000	10500	100	180

Output

Output versions 16
Output signal 16
Signal on alarm 19
Low flow cut off 19
Ex connection data 19
Galvanic isolation 19
Protocol-specific data 20

Output versions

Order code 020: output; input	Output version
Option B	▪ Current output 4 to 20 mA HART ▪ Pulse/frequency/switch output
Option C	▪ Current output 4 to 20 mA HART Ex i ▪ Pulse/frequency/switch output Ex i
Option F	IO-Link
Option M	▪ Modbus RS485 ▪ Current output 4 to 20 mA
Option U	▪ Modbus RS485 Ex i ▪ Current output 4 to 20 mA Ex i

Output signal

Current output 4 to 20 mA HART / 4 to 20 mA HART Ex-i

Signal mode	Choose via terminal assignment: ▪ Active ▪ Passive
Current range	Can be set to: ▪ 4 to 20 mA NAMUR ▪ 4 to 20 mA US ▪ 4 to 20 mA ▪ Fixed current
Max. output current	21.5 mA
Open-circuit voltage	DC < 28.8 V (active)
Max. input voltage	DC 30 V (passive)
Max. load	400 Ω
Resolution	1 µA
Damping	Configurable: 0 to 999.9 s
Assignable measured variables	▪ Off ▪ Volume flow ▪ Mass flow ▪ Conductivity* ▪ Noise* ▪ Coil current shot time* * Visibility depends on order options or device settings

IO-Link

Physical interface	Similar to the standard IEC 61131-9
Signal	Digital communication signal IO-Link, 3-wire
IO-Link version	1.1
IO-Link SSP version	Smart Sensor Profile 2nd Edition V1.2
IO-Link device port	IO-Link port class A

Modbus RS485

Physical interface	RS485 in accordance with EIA/TIA-485 standard

Current output 4 to 20 mA [1]

Signal mode	Choose via terminal assignment: ▪ Active ▪ Passive
Current range	Can be set to: ▪ 4 to 20 mA NAMUR ▪ 4 to 20 mA US ▪ 4 to 20 mA ▪ Fixed current
Max. output current	21.5 mA
Open-circuit voltage	DC < 28.8 V (active)
Max. input voltage	DC 30 V (passive)
Max. load	400 Ω
Resolution	1 µA
Damping	Configurable: 0 to 999.9 s
Assignable measured variables	▪ Off ▪ Volume flow ▪ Mass flow ▪ Conductivity* ▪ Noise* ▪ Coil current shot time* * Visibility depends on order options or device settings

Pulse/frequency/switch output [2]

Function	Can be set to: ▪ Pulse output ▪ Frequency output ▪ Switching output
Version	Open collector: Passive
Input values	▪ DC 10.4 to 30 V ▪ Max. 140 mA
Voltage drop	▪ ≤ DC 2 V @ 100 mA ▪ ≤ DC 2.5 V @ max. input current

Pulse output	
Pulse width	Configurable: 0.05 to 2 000 ms
Max. pulse rate	10 000 Impulse/s
Pulse value	Configurable
Assignable measured variables	▪ Volume flow ▪ Mass flow

Frequency output	
Output frequency	Configurable: end value frequency 2 to 10 000 Hz (f_{max} = 12 500 Hz)
Damping	Configurable: 0 to 999.9 s

1) Only available with Modbus RS485
2) Only available with 4 to 20 mA HART

Pulse/pause ratio	1:1
Assignable measured variables	▪ Off ▪ Volume flow ▪ Mass flow ▪ Conductivity* ▪ Noise* ▪ Coil current shot time* ▪ Reference electrode potential against PE* * Visibility depends on order options or device settings

Switch output	
Switching behavior	Binary, conductive or non-conductive
Switching delay	Configurable: 0 to 100 s
Number of switching cycles	Unlimited

Assignable functions	▪ Off
	▪ On
	▪ Diagnostic behavior:
	  ▪ Alarm
	  ▪ Warning
	  ▪ Warning and alarm
	▪ Limit value:
	  ▪ Off
	  ▪ Volume flow
	  ▪ Mass flow
	  ▪ Flow velocity
	  ▪ Conductivity*
	  ▪ Corrected conductivity*
	  ▪ Totalizer 1…3
	▪ Flow direction monitoring
	▪ Status
	  ▪ Empty pipe detection
	  ▪ Low flow cut off
	* Visibility depends on order options or device settings

Signal on alarm

Output behavior in the event of a device alarm (failure mode)

HART

Device diagnostics	Device condition can be read out via HART Command 48

IO-Link

Operating mode	Digital transmission of all failure information
Device status	Readable via cyclic and acyclic data transmission

Modbus RS485

Failure mode	Selectable: ▪ NaN value instead of current value ▪ Last valid value

Current output 4 to 20 mA

4 to 20 mA	Selectable: ▪ Min. value: 3.59 mA ▪ Max. value: 21.5 mA ▪ Freely definable value between: 3.59 to 21.5 mA ▪ Actual value ▪ Last valid value

Pulse/frequency/switch output

Pulse output	Selectable: ▪ Actual value ▪ No pulses
Frequency output	Selectable: ▪ Actual value ▪ 0 Hz ▪ Defined value: 0 to 12 500 Hz
Switch output	Selectable: ▪ Current status ▪ Open ▪ Closed

Low flow cut off

The switch points for low flow cut off are user-selectable.

Ex connection data

Pay attention to the documentation on Ex connection values .

Safety-related values and intrinsically safe values: Safety Instructions (XA)

Galvanic isolation

The outputs are galvanically isolated from one another and from earth.

Protocol-specific data

HART

Bus structure	The HART signal is superimposed on the 4 to 20 mA current output.
Manufacturer ID	0x11
Device type ID	0x71
HART protocol revision	7
Device description files (DTM, DD)	Information and files under: www.endress.com
HART load	At least 250 Ω
System integration	Measured variables via HART protocol

IO-Link

IO-Link specification	Version 1.1.3
Device ID	9728257
Manufacturer ID	17
Smart Sensor Profile	Smart Sensor Profile 2nd Edition V1.2; supported ▪ Identification and Diagnosis ▪ Digital Measuring and Switching Sensor (as per SSP type 4.3.4) ▪ Function Class Sensor Control Wide
Smart Sensor Profile Type	Measuring profile type 4.3.4 Measuring and Switching Sensor, floating point, 4 channel
SIO mode	No
Speed	COM2 (38.4 kBaud)
Minimum cycle time	12 ms
Process data width	Input: 18 bytes (as per SSP 4.3.4) Output: 2 bytes (as per SSP 4.3.4)
OnRequestdata	8 bytes
Data storage	Yes
Block configuration	Yes
Device operational	The device is operational 6 s after the supply voltage has been applied
System integration	Cyclic input measured variables: ▪ Volume flow [m^3/h] ▪ Conductivity [S/m], depending on order options or device settings ▪ Temperature [°C], depending on the sensor option selected ▪ Totalizer 1 [m^3] Cyclic output measured variables: ▪ **Totalizer** submenu – **Totalize** option ▪ **Totalizer** submenu – **Reset + hold** option ▪ **Totalizer** submenu – **Reset + totalize** option ▪ **Totalizer** submenu – **Hold** option ▪ Flow override ▪ Device search

Device description

In order to integrate field devices into a digital communication system, the IO-Link system needs a description of the device parameters, such as output data, input data, data format, data volume and supported transmission rate.

These data are available in the device description (IODD) which is provided to the IO-Link Master when the communication system is commissioned.

The IODD can be downloaded as follows:
- www.endress.com
- https://ioddfinder.io-link.com

Modbus RS485

Physical interface	RS485 in accordance with EIA/TIA-485 standard
Terminating resistor	Not integrated
Protocol	Modbus Applications Protocol Specification V1.1
Response times	▪ Direct data access: typically 25 to 50 ms ▪ Auto-scan buffer (data range): typically 3 to 5 ms
Device type	Slave
Slave address range	1 to 247
Broadcast address range	0
Function codes	▪ 03: Read holding register ▪ 04: Read input register ▪ 06: Write single registers ▪ 08: Diagnostics ▪ 16: Write multiple registers ▪ 23: Read/write multiple registers
Broadcast messages	Supported by the following function codes: ▪ 06: Write single registers ▪ 16: Write multiple registers ▪ 23: Read/write multiple registers
Supported baud rate	▪ 1 200 BAUD ▪ 2 400 BAUD ▪ 4 800 BAUD ▪ 9 600 BAUD ▪ 19 200 BAUD ▪ 38 400 BAUD ▪ 57 600 BAUD ▪ 115 200 BAUD
Data transfer mode	RTU
Data access	Each parameter can be accessed via Modbus RS485. For Modbus register information
System integration	Information on system integration . ▪ Modbus RS485 information ▪ Function codes ▪ Register information ▪ Response time ▪ Modbus data map

Power supply

Terminal assignment 24
Supply voltage 24
Power consumption 25
Current consumption 25
Power supply failure 25
Electrical connection 25
Potential equalization 29
Terminals 31
Cable entries 31
Overvoltage protection 32

Terminal assignment

The terminal assignment is documented on an adhesive label.

The following terminal assignment is available:

Current output 4 to 20 mA HART (active) and pulse/frequency/switch output

Supply voltage		Output 1				Output 2	
1 (+)	2 (–)	26 (+)	27 (–)	24 (+)	25 (–)	22 (+)	23 (–)
L/+	N/–	Current output 4 to 20 mA HART (active)		–		Pulse/frequency/switch output (passive)	

Current output 4 to 20 mA HART (passive) and pulse/frequency/switch output

Supply voltage		Output 1				Output 2	
1 (+)	2 (–)	26 (+)	27 (–)	24 (+)	25 (–)	22 (+)	23 (–)
L/+	N/–	–		Current output 4 to 20 mA HART (passive)		Pulse/frequency/switch output (passive)	

Modbus RS485 and current output 4 to 20 mA (active)

Supply voltage		Output 1				Output 2	
1 (+)	2 (–)	26 (+)	27 (–)	24 (+)	25 (–)	22 (B)	23 (A)
L/+	N/–	Current output 4 to 20 mA (active)		–		Modbus RS485	

Modbus RS485 and current output 4 to 20 mA (passive)

Supply voltage		Output 1				Output 2	
1 (+)	2 (–)	26 (+)	27 (–)	24 (+)	25 (–)	22 (B)	23 (A)
L/+	N/–	–		Current output 4 to 20 mA (passive)		Modbus RS485	

Supply voltage

Order code for "Power supply"	Terminal voltage		Frequency range
Option **A** IO-Link port class A	DC 18 to 30 V [1]		–
Option **D**	DC 24 V	–20 to +30 %	–
Option **E**	AC 100 to 240 V	–15 to +10 %	50/60 Hz,±5 Hz
Option **I**	DC 24 V	–20 to +30 %	–
	AC 100 to 240 V	–15 to +10 %	50/60 Hz, ±5 Hz
Option **M** non-hazardous area	DC 24 V	–20 to +30 %	–
	AC 100 to 240 V	–15 to +10 %	50/60 Hz, ±5 Hz

1) These values are absolute minimum and maximum values. No tolerance applies. The DC power unit must be tested to ensure it meets technical safety requirements (e.g. PELV, SELV) with limited power sources (e.g. Class 2).

Power consumption

- Transmitter:
  - HART, Modbus RS485: Max. 10 W (active power)
  - IO-Link: Max. 6 W (active power)
- Switch-on current:
  - HART, Modbus RS485: Max. 36 A (< 5 ms) as per NAMUR Recommendation NE 21
  - IO-Link: Max. 400 mA

Current consumption

- Max. 400 mA (24 V)
- Max. 200 mA (110 V, 50/60 Hz; 230 V, 50/60 Hz)
- Max 200 mA. (18 to 30 V, IO-Link port class A)

Power supply failure

- Totalizers stop at the last value measured.
- Device configuration remains unchanged.
- Error messages (incl. total operated hours) are stored.

Electrical connection

Connections and terminal assignment, remote version connecting cable

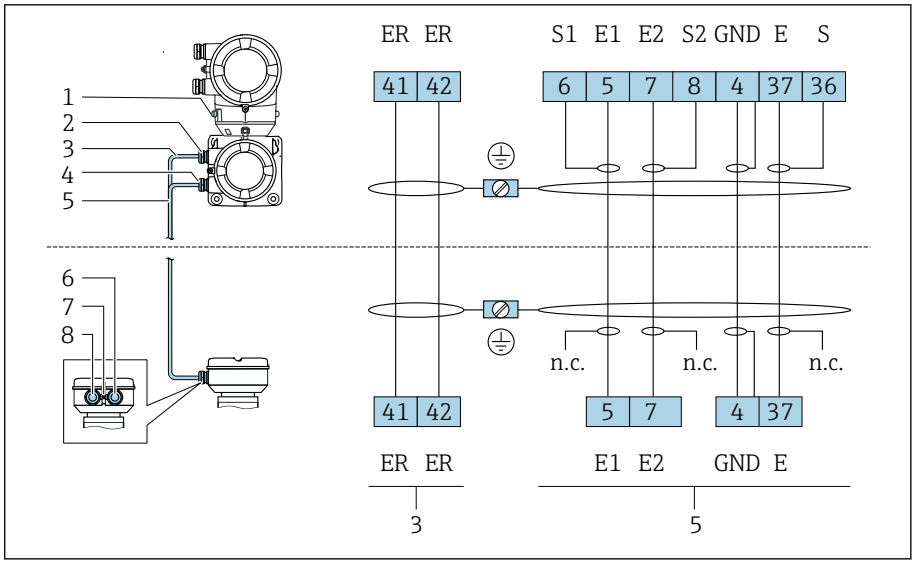

1 *Outer ground terminal*
2 *Transmitter housing: cable entry for coil current cable*
3 *Coil current cable*
4 *Transmitter housing: cable entry for electrode cable*
5 *Electrode cable*
6 *Sensor connection housing: cable entry for electrode cable*
7 *Outer ground terminal*
8 *Sensor connection housing: cable entry for coil current cable*

Transmitter terminal connections

Terminal assignment → *Terminal assignment*, 24

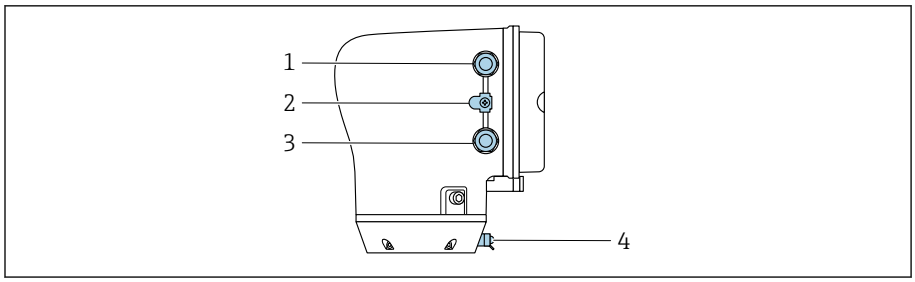

A0043283

1 Cable entry for power supply cable: supply voltage
2 Outer ground terminal: on transmitters made of polycarbonate with a metal pipe adapter
3 Cable entry for signal cable
4 Outer ground terminal

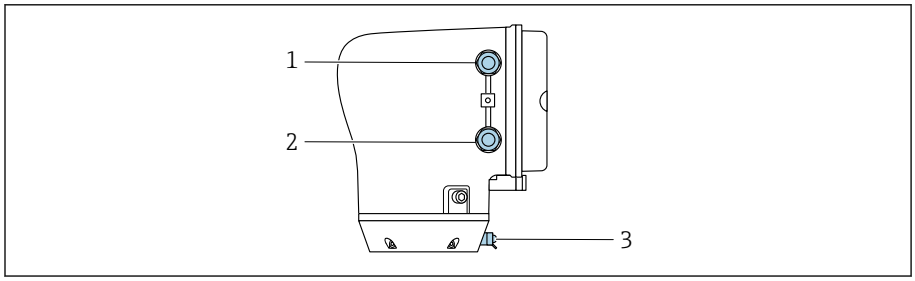

A0045438

1 Cable entry for power supply cable: supply voltage
2 Cable entry for signal cable
3 Outer ground terminal

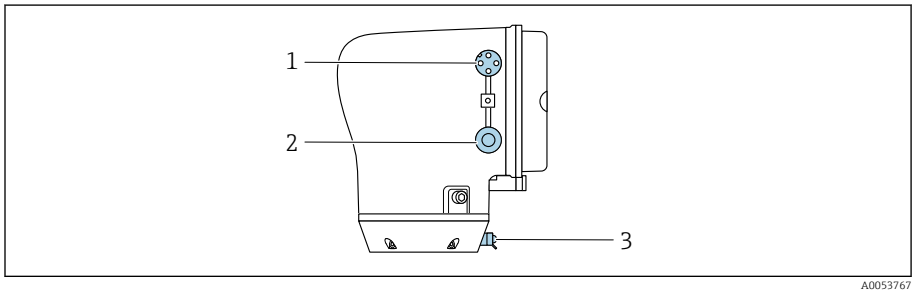

A0053767

1 M12 plug for power supply (supply voltage) and signals (IO-Link)
2 Dummy plug
3 Outer ground terminal

Pin assignment of IO-Link device plug

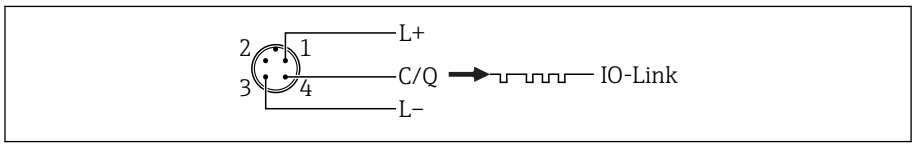

A0053891

1 M12 A-coded (IEC 61076-2-101)

1 PIN 1: power supply
2 PIN 2: not used
3 PIN 3: reference potential for power supply/output
4 PIN 4: output 1 (IO-link)

Examples of electric terminals

Current output 4 to 20 mA HART

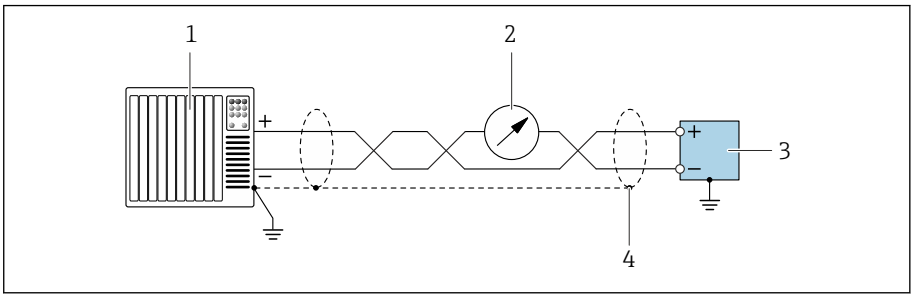

2 *Connection example for 4 to 20 mA current output with HART (active)*

1 *Automation system with 4 to 20 mA current input with HART (e.g. PLC)*
2 *Optional display unit: Note maximum load*
3 *Transmitter with 4 to 20 mA current output with HART (active)*
4 *Ground the cable shield on one side only. For installations in compliance with NAMUR NE98, grounding of the cable shield on both sides is required.*

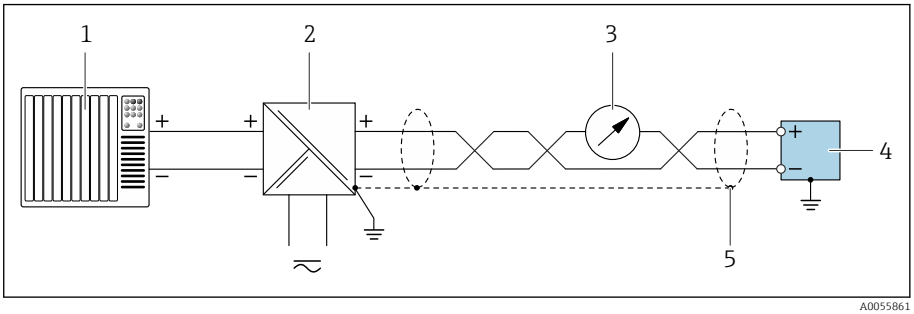

3 *Connection example for 4 to 20 mA current output with HART (passive)*

1 *Automation system with 4 to 20 mA current input with HART (e.g. PLC)*
2 *Power supply*
3 *Optional display unit: Note maximum load*
4 *Transmitter with 4 to 20 mA current output with HART (passive)*
5 *Ground the cable shield on one side only. For installations in compliance with NAMUR NE98, grounding of the cable shield on both sides is required.*

IO-Link

See https://io-link.com"IO-Link System Description"

Modbus RS485

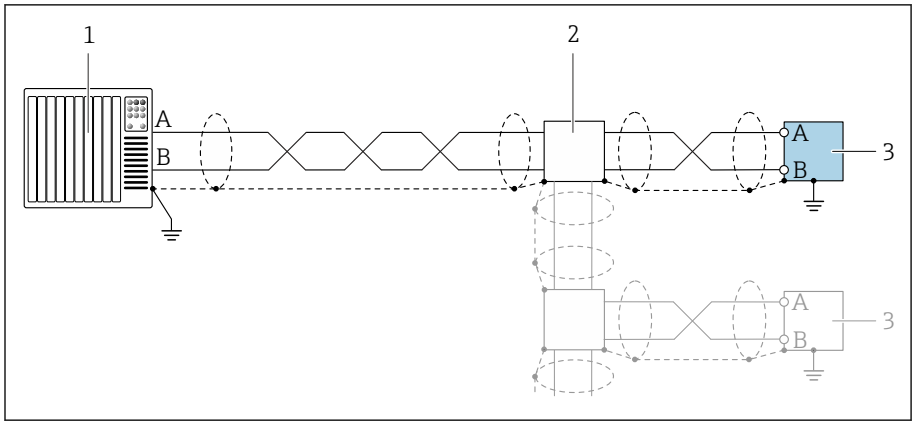

4 *Connection example for Modbus RS485*

1 *Automation system with Modbus master (e.g. PLC)*
2 *Optional distribution box*
3 *Transmitter with Modbus RS485*

Current output 4 to 20 mA (without HART)

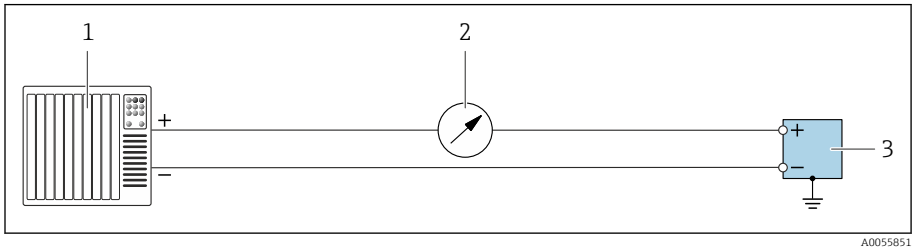

5 *Connection example for 4 to 20 mA current output (active)*

1 *Automation system with current input (e.g. PLC)*
2 *Optional additional display unit: Observe maximum load*
3 *Flowmeter with current output (active)*

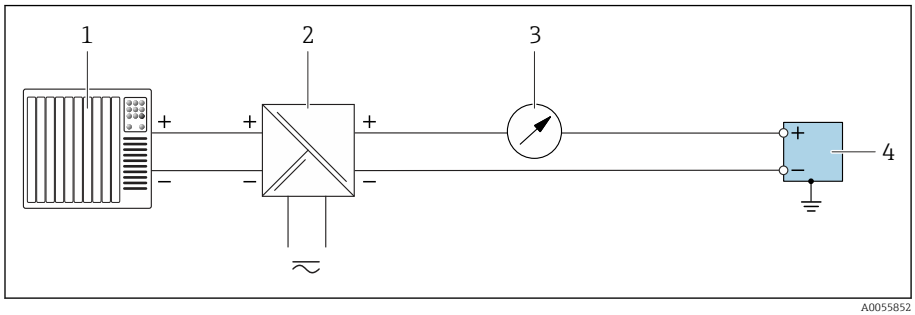

6 *Connection example for 4 to 20 mA current output (passive)*

1 *Automation system with current input (e.g. PLC)*
2 *Power supply*
3 *Optional additional display unit: Observe maximum load*
4 *Transmitter with current output (passive)*

Pulse output/frequency output/switch output

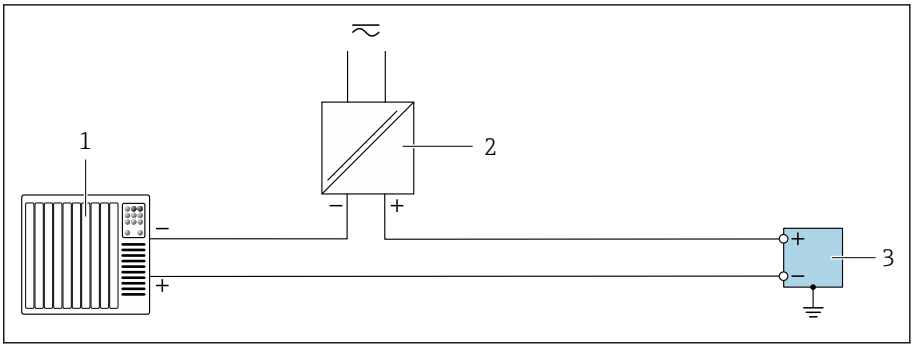

7 *Connection example for pulse output/frequency output/switch output (passive)*

1 *Automation system with pulse input/frequency input/switch input (e.g. PLC)*
2 *Power supply*
3 *Transmitter with pulse output/frequency output/switch output (passive)*

Potential equalization

Introduction

Correct potential equalization (equipotential bonding) is a prerequisite for stable and reliable flow measurement. Inadequate or incorrect potential equalization can result in device failure and present a safety hazard.

The following requirements must be observed to ensure correct, trouble-free measurement:
- The principle that the medium, the sensor and the transmitter must be at the same electric potential applies.
- Take in-company grounding guidelines, materials and the grounding conditions and potential conditions of the pipe into consideration.
- The necessary potential equalization connections must be established using a ground cable with a minimum cross-section of 6 mm^2 (0.0093 in^2). Also use a cable lug.
- In the case of remote device versions, the ground terminal in the example always refers to the sensor and not to the transmitter.

Accessories such as ground cables and ground disks can be ordered from Endress +Hauser → *Device-specific accessories*, 110

For devices intended for use in hazardous areas, observe the instructions in the Ex documentation (XA).

Abbreviations used
- PE (Protective Earth): potential at the potential equalization terminals of the device
- P_P (Potential Pipe): potential of the pipe, measured at the flanges
- P_M (Potential Medium): potential of the medium

Connection examples for standard situations

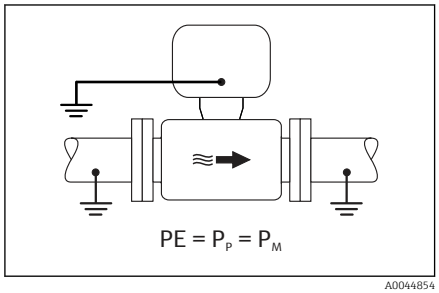

Unlined and grounded metal pipe
- Potential equalization is via the measuring tube.
- The medium is set to ground potential.

Starting conditions:
- Pipes are correctly grounded on both sides.
- Pipes are conductive and at the same electric potential as the medium

▶ Connect the connection housing of the transmitter or sensor to ground potential via the ground terminal provided for this purpose.

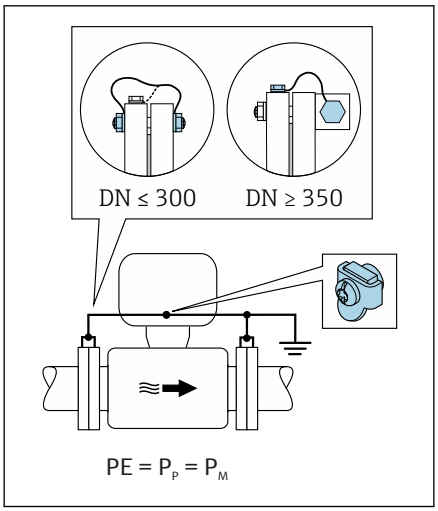

A0042089

Unlined metal pipe
- Potential equalization is via the ground terminal and pipe flanges.
- The medium is set to ground potential.

Starting conditions:
- Pipes are not sufficiently grounded.
- Pipes are conductive and at the same electric potential as the medium

1. Connect both sensor flanges to the pipe flange via a ground cable and ground them.
2. Connect the connection housing of the transmitter or sensor to ground potential via the ground terminal provided for this purpose.
3. For DN ≤ 300 (12"): Mount the ground cable directly on the conductive flange coating of the sensor with the flange screws.
4. For DN ≥ 350 (14"): Mount the ground cable directly on the metal transport bracket. Observe the screw tightening torques: see the Brief Operating Instructions for the sensor.

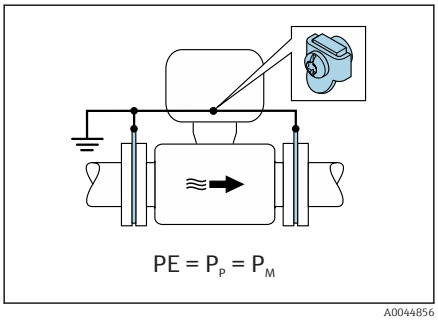

A0044856

Plastic pipe or pipe with insulating liner
- Potential equalization is via the ground terminal and ground disks.
- The medium is set to ground potential.

Starting conditions:
- The pipe has an insulating effect.
- Low-impedance medium grounding close to the sensor is not guaranteed.
- Equalizing currents through the medium cannot be ruled out.

1. Connect the ground disks via the ground cable to the ground terminal of the connection housing of the transmitter or sensor.
2. Connect the connection to ground potential.

Connection example with the potential of medium not equal to potential equalization connection without the "Floating measurement" option

In these cases, the medium potential can differ from the potential of the device.

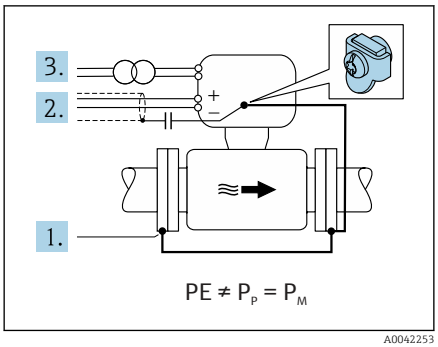

A0042253

Metal, ungrounded pipe
The sensor and transmitter are installed in a way that provides electrical insulation from PE, e.g. applications for electrolytic processes or systems with cathodic protection.

Starting conditions:
- Unlined metal pipe
- Pipes with an electrically conductive liner

1. Connect the pipe flanges and transmitter via the ground cable.
2. Route the shielding of the signal lines via a capacitor (recommended value 1.5µF/ 50V).
3. Device connected to power supply such that it is floating in relation to the potential equalization connection (isolation transformer). This measure is not required in the case of 24V DC supply voltage without PE (= SELV power unit).

Connection examples with the potential of medium not equal to potential equalization connection with the "Floating measurement" option

In these cases, the medium potential can differ from the potential of the device.

Introduction

The "Floating measurement" option enables the galvanic isolation of the measuring system from the device potential. This minimizes harmful equalizing currents caused by

differences in potential between the medium and the device. The "Floating measurement" option is optionally available: order code for "Sensor option", option CV

Operating conditions for use of the "Floating measurement" option

Device version	Compact version and remote version (length of connecting cable ≤ 10 m)
Differences in voltage between medium potential and device potential	As small as possible, usually in the mV range
Alternating voltage frequencies in the medium or at ground potential (PE)	Below typical power line frequency in the country

To achieve the specified conductivity measuring accuracy, a conductivity calibration is recommended when the device is installed.

A full pipe adjustment is recommended when the device is installed.

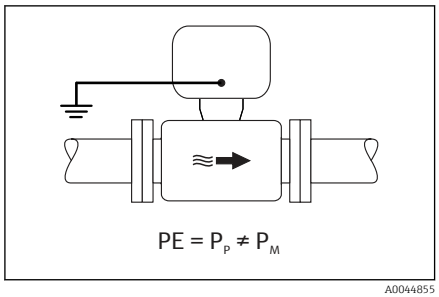

A0044855

Plastic pipe
Sensor and transmitter are correctly grounded. A difference in potential can occur between the medium and potential equalization connection. Potential equalization between P_M and PE via the reference electrode is minimized with the "Floating measurement" option.

Starting conditions:
- The pipe has an insulating effect.
- Equalizing currents through the medium cannot be ruled out.

1. Use the "Floating measurement" option, while also observing the operating conditions for floating measurement.
2. Connect the connection housing of the transmitter or sensor to ground potential via the ground terminal provided for this purpose.

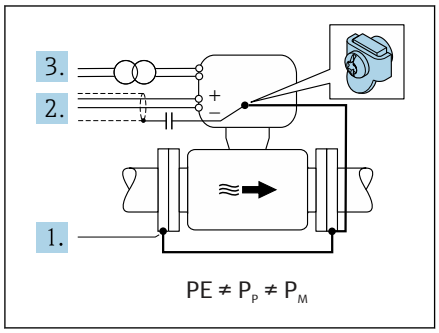

A0044857

Metal, ungrounded pipe with insulating liner
The sensor and transmitter are installed in a way that provides electrical insulation from PE. The medium and pipe have different potentials. The "Floating measurement" option minimizes harmful equalizing currents between P_M and P_P via the reference electrode.

Starting conditions:
- Metal pipe with insulating liner
- Equalizing currents through the medium cannot be ruled out.

1. Connect the pipe flanges and transmitter via the ground cable.
2. Route the shielding of the signal cables via a capacitor (recommended value 1.5µF/ 50V).
3. Device connected to power supply such that it is floating in relation to the potential equalization connection (isolation transformer). This measure is not required in the case of 24V DC supply voltage without PE (= SELV power unit).
4. Use the "Floating measurement" option, while also observing the operating conditions for floating measurement.

Terminals

Spring terminals
- Suitable for strands and strands with ferrules.
- Conductor cross-section 0.2 to 2.5 mm^2 (24 to 12 AWG).

Cable entries

- Cable gland: M20 × 1.5 for cable Ø6 to 12 mm (0.24 to 0.47 in)
- Thread for cable entry:
  - NPT ½"
  - G ½", G ½" Ex d
  - M20
- M12 plug-in connector (IO-Link only)

Overvoltage protection

Mains voltage fluctuations	→ *Supply voltage*, 🖹 24
Overvoltage category	Overvoltage category II
Short-term, temporary overvoltage	Between cable and neutral conductor up to 1200 V for max. 5s
Long-term, temporary overvoltage	Up to 500 V between cable and ground

Cable specifications

Requirements for connecting cable 34
Ground cable requirements 34
Connecting cable requirements 34

Requirements for connecting cable

Electrical safety

As per applicable national regulations.

Permitted temperature range

- Observe the installation guidelines that apply in the country of installation.
- The cables must be suitable for the minimum temperatures and maximum temperatures to be expected.

Power supply cable (incl. conductor for the inner ground terminal)

- A standard installation cable is sufficient.
- Provide grounding according to applicable national codes and regulations.

Signal cable

- Current output 4 to 20 mA HART:
  A shielded cable is recommended, observe the grounding concept of the facility.
- Pulse/frequency/switch output:
  Standard installation cable
- IO-Link:
  Twisted three- or four-core cable M12 A-coded according to IEC 61076-2-101 recommended with
  - Conductor cross-section: 0.34 mm^2 (AWG22)
  - Max. cable length: 20 m
- Modbus RS485:
  Cable type A according to EIA/TIA-485 standard is recommended
- Current output 4 to 20 mA:
  Standard installation cable

Ground cable requirements

Copper wire: at least 6 mm^2 (0.0093 in^2)

Connecting cable requirements

Connecting cable only necessary for remote version.

Electrode cable	Coil current cable
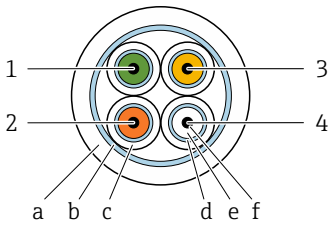 A0054679 *1 GND (green): Ground-wire 0.38 mm² (AWG 21)* *2 E1 (brown): "Electrode E1" - core 0.38 mm² (AWG 21)* *3 E (yellow): grounding 0.38 mm² (AWG 21)* *4 E2 (white): "Electrode E2"- core 0.38 mm² (AWG 21)* *a Outer jacket* *b Cable shield* *c Core jacket* *d Core shield* *e Core insulation* *f Core*	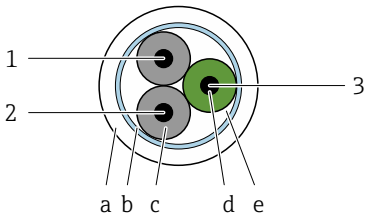 A0054680 *1 ER+ (black): coil current core 0.75 mm² (AWG 18)* *2 ER– (black): coil current core 0.75 mm² (AWG 18)* *3 NC (yellow-green): not connected 0.75 mm² (AWG 18)* *a Outer jacket* *b Cable shield* *c Core insulation* *d Core* *e Core reinforcement*

Armored connecting cable
Armored connecting cables with additional, metal reinforcing braid can be ordered from Endress+Hauser. Armored connecting cables are used:
- When laying the cable directly in the ground
- Where there is a risk of damage from rodents
- If using the device below IP68 degree of protection

Electrode cable

Design	3×0.38 mm² (21 AWG) with common, braided copper shield (Ø ~ 9.5 mm (0.37 in)) and individual shielded cores If using the empty pipe detection (EPD) function: 4×0.38 mm² (21 AWG)) with common, braided copper shield (Ø ~ 9.5 mm (0.37 in)) and individual shielded cores
Conductor resistance	≤ 50 Ω/km (0.015 Ω/ft)
Capacitance: core/shield	≤ 420 pF/m (128 pF/ft)
Cable length	Depends on the medium conductivity: maximum 200 m (656 ft)
Cable lengths (available for order)	5 m (15 ft), 10 m (30 ft), 20 m (60 ft)or variable length: maximum 200 m (656 ft) Armored cables: variable length up to maximum 200 m (656 ft)
Operating temperature	–20 to +80 °C (–4 to +176 °F)

Coil current cable

Design	3×0.75 mm² (18 AWG) with common, braided copper shield (Ø ~ 9.5 mm (0.37 in)) and individual shielded cores
Conductor resistance	≤ 37 Ω/km (0.011 Ω/ft)
Capacitance: core/shield	≤ 120 pF/m (37 pF/ft)
Cable length	Depends on the medium conductivity, max. 200 m (656 ft)
Cable lengths (available for order)	5 m (15 ft), 10 m (30 ft), 20 m (60 ft) or variable length up to max. 200 m (656 ft) Armored cables: variable length up to max. 200 m (656 ft)

Operating temperature	−20 to +80 °C (−4 to +176 °F)
Test voltage for cable insulation	≤ AC 1 433 V rms 50/60 Hz or ≥ DC 2 026 V

Performance characteristics

Reference operating conditions 38
Maximum measurement error 38
Repeatability 39
Influence of ambient temperature 39

Reference operating conditions

- Error limits based on ISO 20456:2017
- Water, typically: +15 to +45 °C (+59 to +113 °F); 0.5 to 7 bar (73 to 101 psi)
- Data as indicated in the calibration protocol
- Accuracy based on accredited calibration rigs according to ISO 17025

To obtain measured errors, use the *Applicator* sizing tool → *Service-specific accessory* , 112

Maximum measurement error

o. r. = of reading

Maximum permissible error under reference operating conditions

Volume flow

- ±0.5 % o. r.±1 mm/s (±0.04 in/s)
- Optional: ±0.2 % o.r. ± 2 mm/s (0.08 in/s)

Fluctuations in the supply voltage have no effect within the specified range.

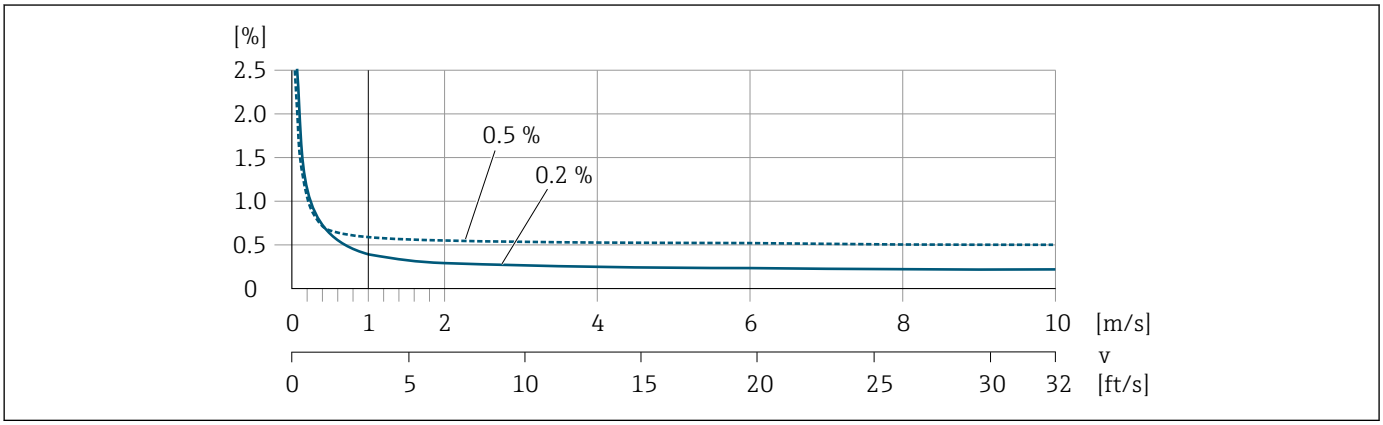

8 *Maximum measurement error in % o.r.*

Electrical conductivity

Order code for "Conductivity measurement", option CX

The values apply for:
- Measurements at a reference temperature of +25 °C (+77 °F).
  If the temperature differs, the temperature coefficient of the medium must be taken into account (typically 2.1%/K).
- Device version: compact (transmitter and sensor form a mechanical unit)
- Devices in a metal pipe or in a non-metal pipe with installed ground disks.
- Devices whose potential equalization has been established according to the specifications in the related Operating Instructions.

Conductivity [µS/cm]	Measurement error [%] o. r.
5 to 20	± 20%
20 to 20 000	± 10%
20 000 to 100 000	± 20%

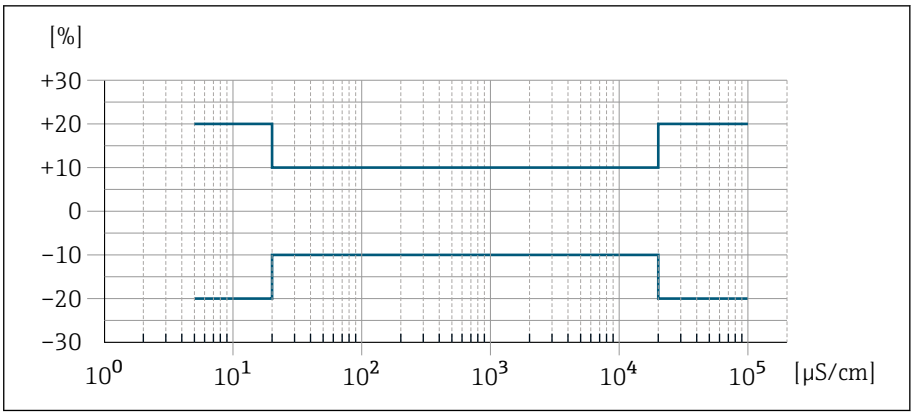

9 *Measurement error for order code "Conductivity measurement", option CX*

Accuracy of outputs

Current output	±5 µA
Pulse/frequency output	Max. ±100 ppm o. r.(across the entire ambient temperature range)

Repeatability

Volume flow	Max. ±0.1 % o. r. ± 0.5 mm/s (0.02 in/s)
Electrical conductivity	Max. ±5 % o. r. (5 to 100 000 µS/cm)

Influence of ambient temperature

Current output	Temperature coefficient max. 1 µA/°C
Pulse/frequency output	No additional effect. Is included in the accuracy.

Installation

Installation conditions 42

Installation conditions

Flow direction

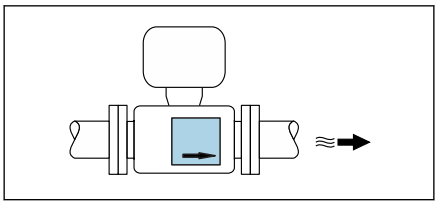

A0041163

Install the device in the direction of flow.

Note the direction of arrow on the nameplate.

Installation with inlet runs and outlet runs

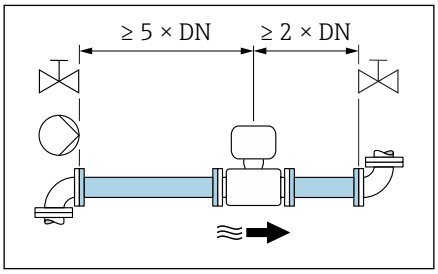

A0028997

Ensure straight, undisturbed inlet and outlet runs.

To avoid negative pressure and to comply with accuracy specifications, install the sensor upstream from assemblies that produce turbulence (e.g. valves, T-sections) and downstream from pumps → *Installation near pumps*, 46.

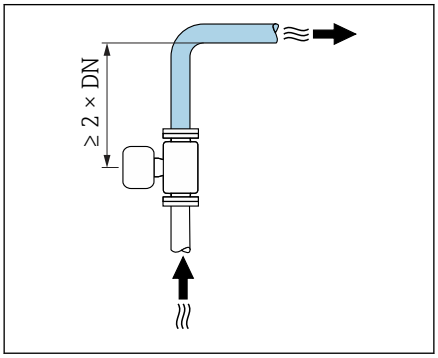

A0042132

Keep a sufficient distance to the next pipe elbow.

Installation without inlet runs and outlet runs

Depending on the device design and installation location, the inlet and outlet runs can be reduced or omitted entirely.

Maximum measurement error
When the device is installed with the inlet and outlet runs described, a maximum measurement error of ±0.5 % of the reading ±1 mm/s (0.04 in/s) can be guaranteed.

Devices and possible order options

Order code for "Electrodes"		
Option	**Description**	**Design**
J	1.4435/316L, pointed for 0 x DN inlet/ outlet runs	0 x DN full-bore design [1]
K	Alloy C22, pointed for 0 x DN inlet/outlet runs	
L	1.4435/316L for 0 x DN inlet/outlet runs	
M	Alloy C22 for 0 x DN inlet/outlet runs	
N	Tantalum for 0 x DN inlet/outlet runs	

Order code for "Electrodes"		
Option	**Description**	**Design**
P	Platinum for 0 x DN inlet/outlet runs	
Q	Titanium for 0 x DN inlet/outlet runs	

1) "Full-bore" indicates a measuring tube cross-section corresponding to the nominal diameter without constriction. This means there is no pressure loss.

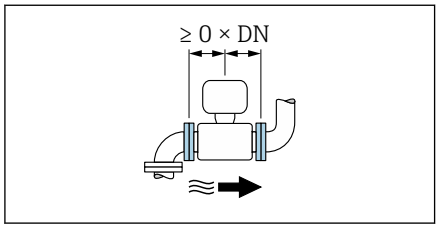

A0032859

Installation before or after bends
Installation without inlet and outlet runs is possible.

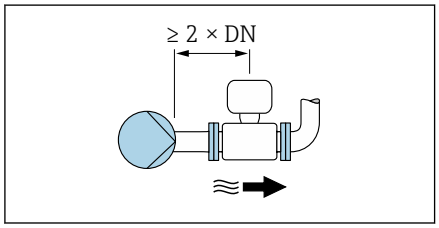

A0045530

Installation downstream of pumps
Installation without inlet and outlet runs is possible.

An inlet run of ≥ 2 x DN is recommended.

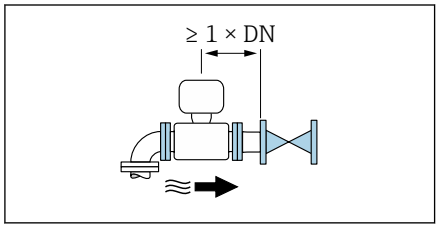

A0045531

Installation upstream of valves
Installation without inlet and outlet runs is possible.

An outlet run of ≥ 1 x DN is recommended.

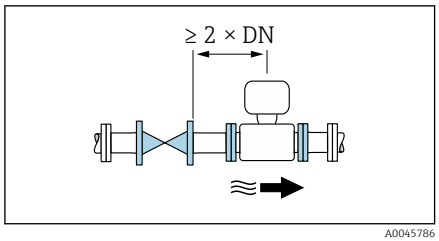

A0045786

Installation downstream of valves
The device can be installed without inlet and outlet runs if the valve is 100% open during operation.

An inlet run of ≥ 2 x DN is recommended if the valve is 100% open during operation.

Orientations

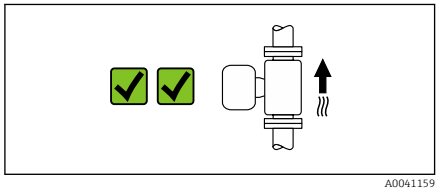
A0041159

Vertical orientation, upward direction of flow
For all applications.

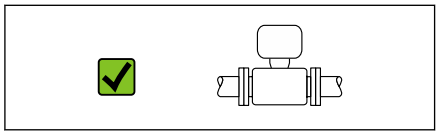
A0041160

Horizontal orientation, transmitter at top
This orientation is suitable for the following applications:
- For medium and low process temperatures, in order to maintain the minimum ambient temperature for the transmitter.
- For empty pipe detection, even in the case of empty or partially filled measuring pipes.

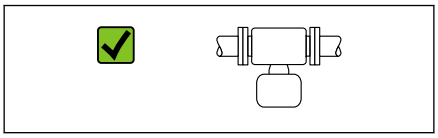

A0041161

Horizontal orientation, transmitter at bottom

This orientation is suitable for the following applications:

- For medium and high process temperatures, in order to maintain the maximum ambient temperature for the transmitter.
- To prevent the electronics module from overheating in the case of a sharp rise in temperature (e.g. CIP or SIP processes), install the measuring instrument with the transmitter component pointing downwards.

This orientation is not suitable for the following applications:

If empty pipe detection is to be used.

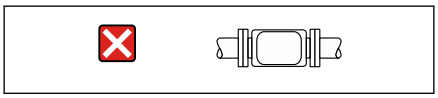

A0041162

Horizontal orientation, transmitter at side

This orientation is not suitable

Vertical

Optimum for self-emptying pipe systems and for use in conjunction with empty pipe detection.

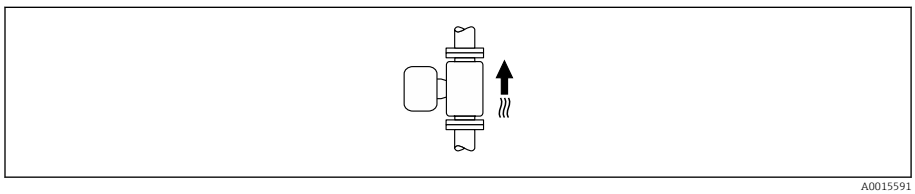

A0015591

Horizontal

- Ideally, the measuring electrode plane should be horizontal. This prevents brief insulation of the measuring electrodes by entrained air bubbles.
- Empty pipe detection only works if the transmitter housing is pointing upwards as otherwise there is no guarantee that the empty pipe detection function will actually respond to a partially filled or empty measuring tube.

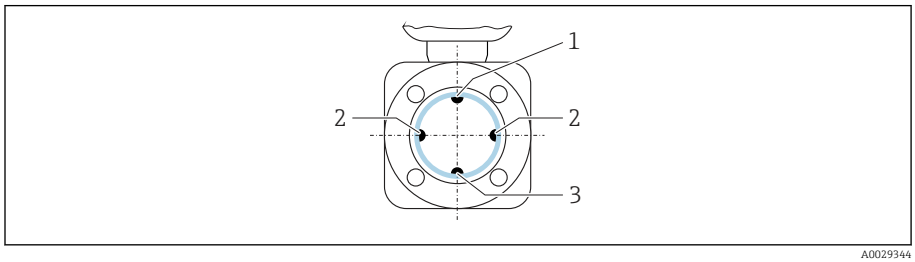

A0029344

1 EPD electrode for empty pipe detection
2 Measuring electrodes for signal detection
3 Reference electrode for potential equalization

Measuring instruments with tantalum or platinum electrodes can be ordered without an EPD electrode. In this case, empty pipe detection is performed via the measuring electrodes.

Mounting locations

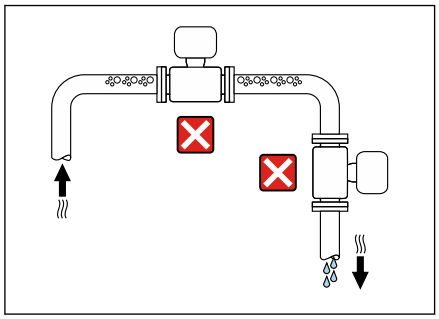

A0042131

- Do not install the device at the highest point of the pipe.
- Do not install the device upstream from a free pipe outlet in a down pipe.

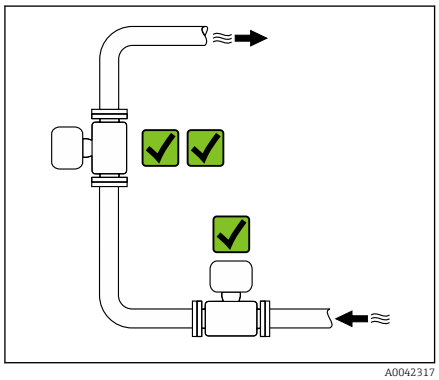

A0042317

The device should ideally be installed in an ascending pipe.

Installation near control valves

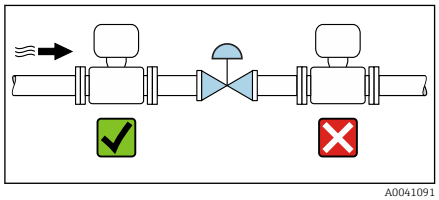

A0041091

Install the device in the direction of flow upstream from the control valve.

Installation upstream from a down pipe

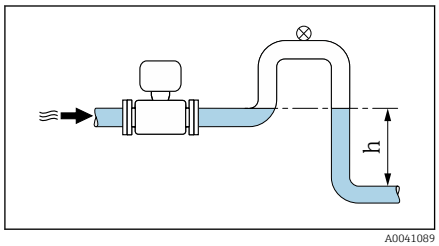

A0041089

NOTICE

Negative pressure in the measuring pipe can damage the liner!

- ▶ If installing upstream from down pipes with a length h ≥ 5 m (16.4 ft): install a siphon with a vent valve downstream from the device.

This arrangement prevents the flow of liquid stopping in the pipe and air entrainment.

Installation with partially filled pipes

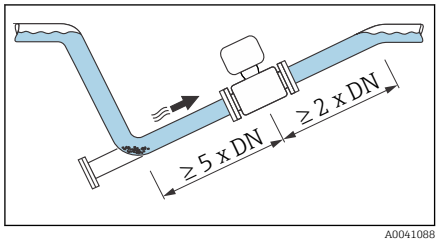

A0041088

- Partially filled pipes with a gradient require a drain-type configuration.
- The installation of a cleaning valve is recommended.

Installation near pumps

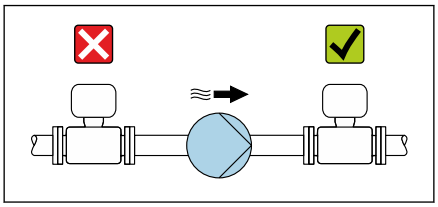

A0041083

NOTICE

A vacuum in the measuring tube can damage the liner!

- ▶ Install the device in the direction of flow downstream from the pump.
- ▶ Install pulsation dampers if reciprocating, diaphragm or peristaltic pumps are used.

Information on the measuring system's resistance to vibration and shock
→ *Vibration resistance and shock resistance*, 📄 50

Installation of heavy devices

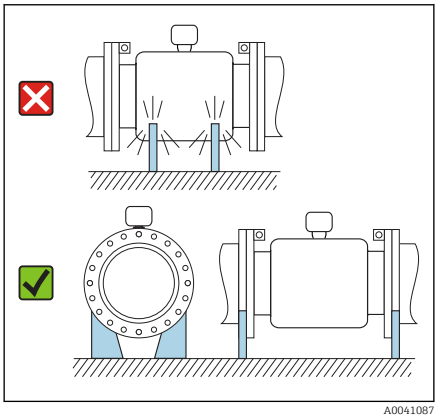

A0041087

Support is required with nominal diameters of DN ≥ 350 (14") and higher.

NOTICE

Damage to the device!

If incorrect support is provided, the sensor housing could buckle and the internal magnetic coils could be damaged.

- ▶ Only provide supports at the pipe flanges.

Pipe vibrations

A remote version is recommended in the event of strong pipe vibrations.

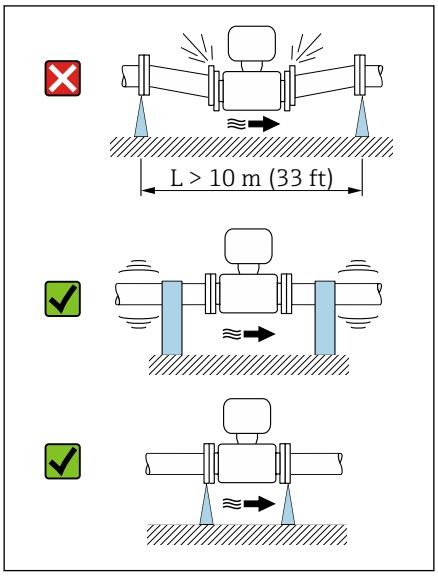

A0041092

NOTICE

Pipe vibrations can damage the device!

- ▶ Do not expose the device to strong vibrations.
- ▶ Support the pipe and fix it in place.
- ▶ Support the device and fix it in place.
- ▶ Mount the sensor and transmitter separately.

Adapters

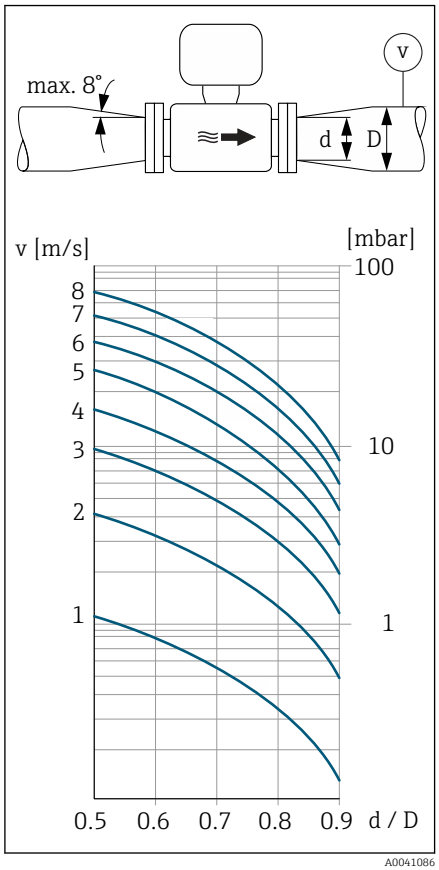

A0041086

Suitable adapters (double-flange reducers) can be used to install the sensor in larger-diameter pipes. The resulting higher rate of flow improves measuring accuracy with very slow-moving media.

The nomogram shown here can be used to calculate the pressure loss caused by reducers and expanders. It only applies to liquids with a viscosity similar to that of water.

1. Calculate the ratio of the diameters d/D.
2. Determine the flow velocity after the reduction.
3. From the chart, determine the pressure loss as a function of the flow velocity v and the d/D ratio.

Seals

Note the following when installing seals:
- For "PFA" liner: no seal is required.
- For "PTFE" liner: no seal is required.
- For DIN flanges: only install seals according to DIN EN 1514-1.

Thermal insulation

The sensor and pipe must be insulated in the event of very hot media. The insulation helps to slow energy loss and prevent injuries from accidental contact with hot pipes.

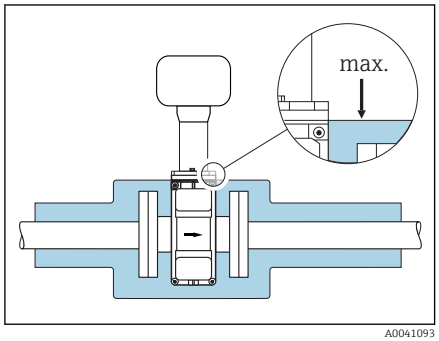

A0041093

NOTICE

If the meter electronics overheat this can damage the device!

- ▶ Keep the housing support completely free (heat dissipation).
- ▶ Provide insulation but make sure it does not go beyond the upper edge of the two sensor half-shells.

Magnetism and static electricity

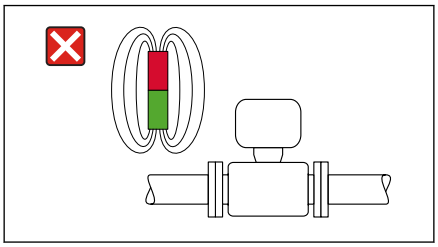

A0042152

Do not install the device near magnetic fields, e.g. Engines, transformers.

Outdoor use

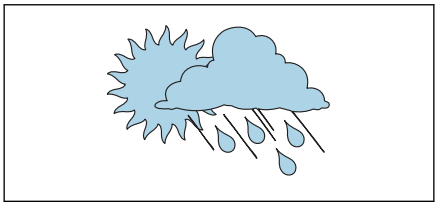

A0023989

- Avoid exposure to direct sunlight.
- Install in a location protected from sunlight.
- Avoid direct exposure to weather conditions.
- Use a weather protection cover → *Transmitter*, 110.

Immersion in water

Only the remote version with IP68, type 6P, is suitable for immersion in water.

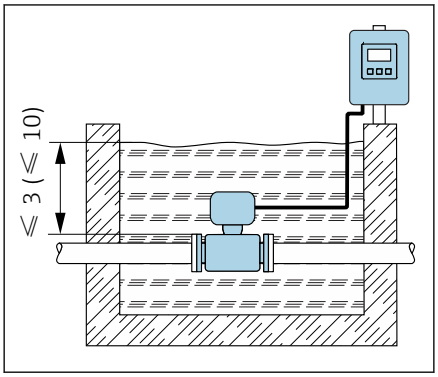

A0042412

NOTICE

If the maximum water depth and operating duration are exceeded, this will damage the device!

▶ Observe the maximum water depth and operating duration.

Order code for "Sensor option", option CQ "IP68, Type 6P, factory-potted"

- For permanent operation of the device under rain or surface water
- Operation at a maximum depth of 3 m (10 ft)

Use in buried applications

Only the remote version with IP68 is suitable for use in buried applications.

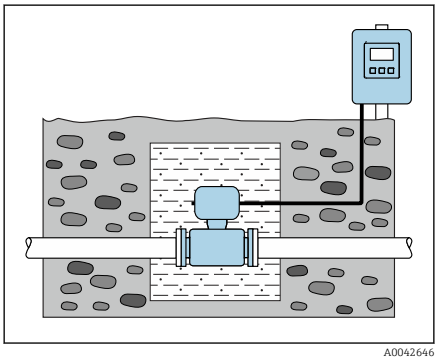

A0042646

Order code for "Sensor option", options CD, CE

The device can be used in buried applications without the need to implement additional precautionary measures on the device.
Installation is performed according to regional installation regulations.

Environment

Ambient temperature range 50
Storage temperature 50
Relative humidity 50
Operating height 50
Degree of protection 50
Vibration resistance and shock resistance 50
Electromagnetic compatibility (EMC) 51

Ambient temperature range

Transmitter	−40 to +60 °C (−40 to +140 °F)
Local display	−20 to +60 °C (−4 to +140 °F) The readability of the display may be impaired at temperatures outside the temperature range.
Sensor	Process connection, carbon steel: −10 to +60 °C (+14 to +140 °F) Process connection, stainless steel: −40 to +60 °C (−40 to +140 °F)
Liner	Do not exceed or fall below the permitted temperature range of the liner → *Medium temperature range*, 54.

Dependency of ambient temperature on medium temperature → *Medium temperature range*, 54

If using the device in hazardous areas, observe the "Safety Instructions" documentation.

Storage temperature

The storage temperature corresponds to the ambient temperature range of the transmitter and sensor.

Relative humidity

The device is suitable for use in outdoor and indoor areas with a relative humidity of 5 to 95%.

Operating height

According to EN 61010-1
- Without overvoltage protection: ≤ 2 000 m
- With overvoltage protection: > 2 000 m (e.g. Endress+Hauser HAW series)

Degree of protection

Transmitter	▪ IP66/67, Type 4X enclosure, suitable for pollution degree 4 ▪ Open housing: IP20, Type 1 enclosure, suitable for pollution degree 2	
Sensor	IP66/67, Type 4X enclosure, suitable for pollution degree 4	
Optional sensor		
Order code for "Sensor option", option CQ	IP68, type 6P, factory encapsulation Sensor with aluminum half-shell housing	Use of device under rainwater or surface water at a maximum water depth of: 3 m (10 ft)

Vibration resistance and shock resistance

Compact version

Vibration, sinusoidal Following IEC 60068-2-6	2 to 8.4 Hz 8.4 to 2 000 Hz	3.5 mm peak 1 g peak
Vibration, broad-band random Following IEC 60068-2-64	10 to 200 Hz 200 to 2 000 Hz	0.003 g^2/Hz 0.001 g^2/Hz (1.54 g rms)
Shocks, half-sine Following IEC 60068-2-27	6 ms 30 g	

Shock
Due to rough handling similar to IEC 60068-2-31.

Remote version (sensor)

Vibration, sinusoidal Following IEC 60068-2-6	2 to 8.4 Hz 8.4 to 2 000 Hz	7.5 mm peak 2 g peak
Vibration, broad-band random Following IEC 60068-2-6	10 to 200 Hz 200 to 2 000 Hz	0.01 g^2/Hz 0.003 g^2/Hz (2.7 g rms)
Shocks, half-sine Following IEC 60068-2-6	6 ms 50 g	

Shock
Due to rough handling similar to IEC 60068-2-31.

Electromagnetic compatibility (EMC)

As per IEC/EN 61326 and
- HART, Modbus RS485: NAMUR Recommendation NE 21
- IO-Link: IO-Link Interface and System Specification


For more information: Declaration of Conformity

Process

Medium temperature range 54
Conductivity 55
Flow limit 55
Pressure/temperature ratings 56
Pressure tightness 58
Pressure loss 59

Medium temperature range

The medium temperature range depends on the liner.

PFA, DN 25 to 200 (1 to 8")	−20 to +150 °C (−4 to +302 °F)

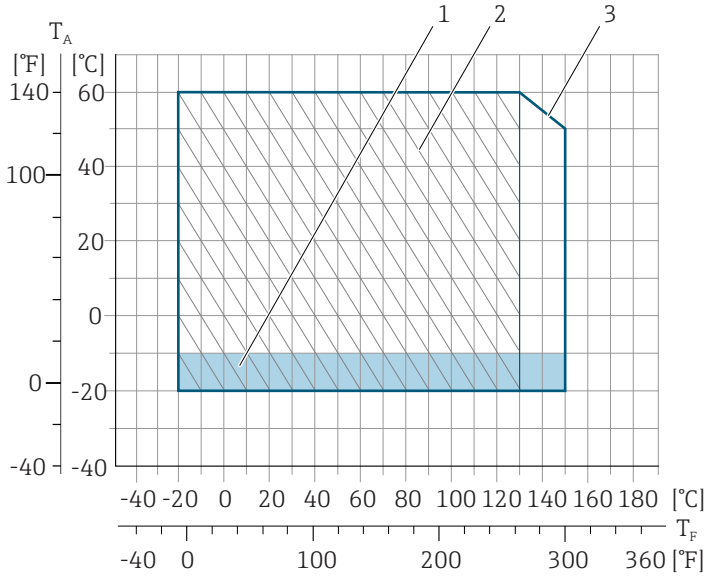

A0043553

T_A Ambient temperature
T_F Medium temperature
1 Colored area: the ambient temperature range −10 to −20 °C (+14 to −4 °F) applies to stainless flanges only
2 Hatched area: harsh environment only for medium temperature range −20 to +130 °C (−4 to +266 °F)
3 −20 to +150 °C (−4 to +302 °F)

PTFE	▪ −20 to +110 °C (−4 to +230 °F) (order code for "Liner", option 8) ▪ −40 to +130 °C (−40 to +266 °F) (order code for "Liner", option E)

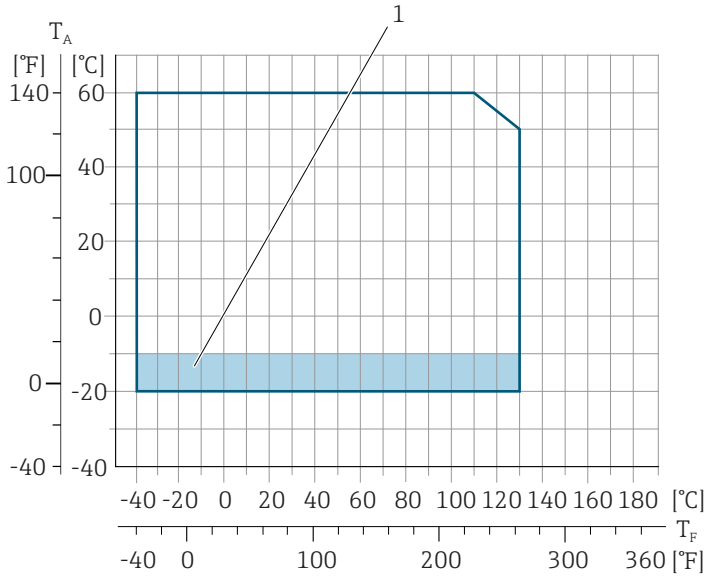

A0043555

T_A Ambient temperature
T_F Medium temperature
1 Colored area: the ambient temperature range of −10 to −20 °C (+14 to −4 °F) applies to stainless flanges only

Conductivity

The minimum conductivity is:
- 5 µS/cm for liquids in general
- 20 µS/cm for demineralized water

The following basic conditions must be observed for < 20 µS/cm:
- Order code 013 for "Functionality", option D "Extended transmitter" and higher output signal damping is recommended for values under 20 µS/cm.
- Observe the maximum permitted cable length L_{max}. This length is determined by the conductivity of the medium.
- With order code 013 "Functionality", option A "Standard transmitter" and empty pipe detection (EPD) switched on, the minimum conductivity is 20 µS/cm.
- With order code 013 "Functionality", option A "Standard transmitter" - remote version, empty pipe detection may not be activated if L_{max} > 20 m.

Note that in the case of the remote version, the minimum conductivity depends on the cable length.

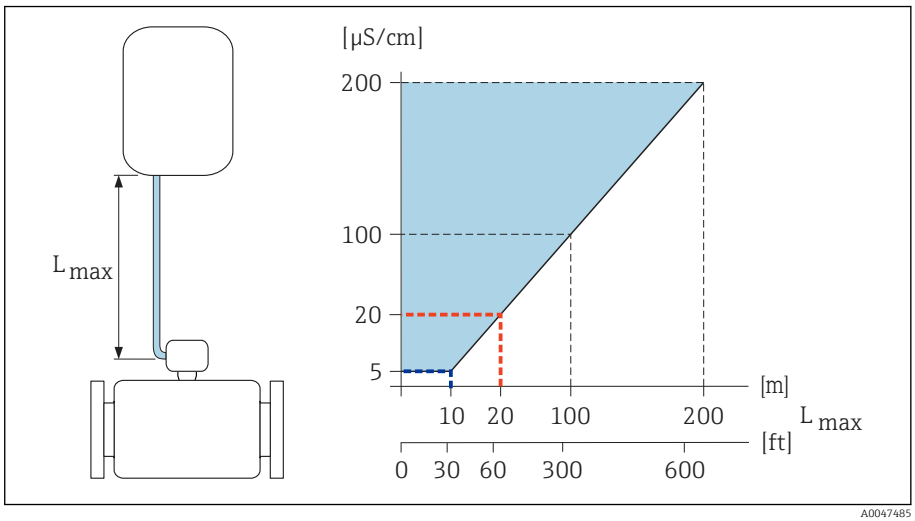

10 Permitted length of connecting cable

Colored area = permitted range
L_{max} = length of connecting cable in [m] ([ft])
[µS/cm] = medium conductivity
Red line = order code 013 "Functionality", option A "Standard transmitter"
Blue line = order code 013 "Functionality", option D "Extended transmitter"

Flow limit

Pipe diameter and flow rate determine the nominal diameter of the sensor.

The flow velocity is increased by reducing the sensor nominal diameter.

2 to 3 m/s (6.56 to 9.84 ft/s)	Optimum flow velocity
v < 2 m/s (6.56 ft/s)	For abrasive media, e.g. potter's clay, lime milk, ore slurry
v > 2 m/s (6.56 ft/s)	For media producing buildup, e.g. wastewater sludge

Pressure/temperature ratings

Maximum permitted medium pressure as a function of the medium temperature.

The data relate to all pressure-bearing parts of the device.

Fixed flange similar to EN 1092-1

Stainless steel (−20 °C (−4 °F))
Carbon steel (−10 °C (14 °F))

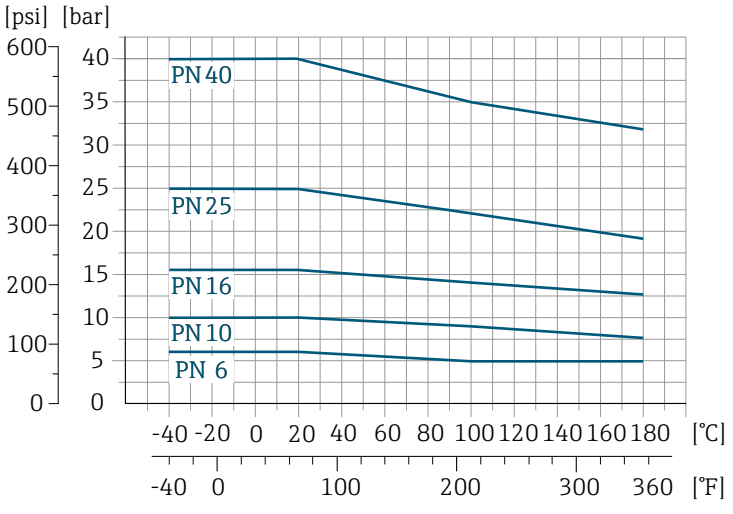

A0029391-EN

Fixed flange similar to ASME B16.5

Stainless steel

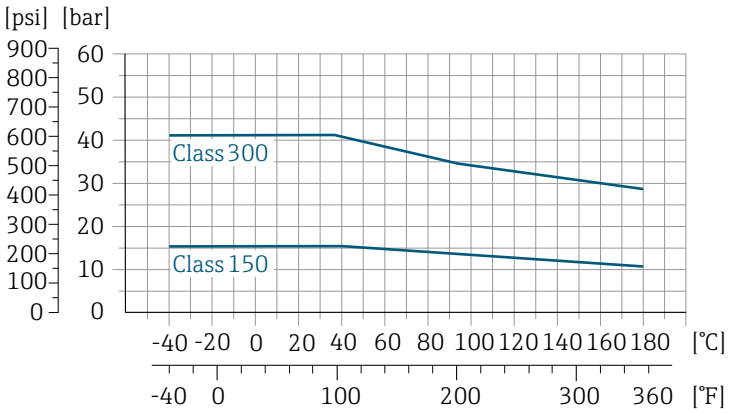

A0029394-EN

Carbon steel

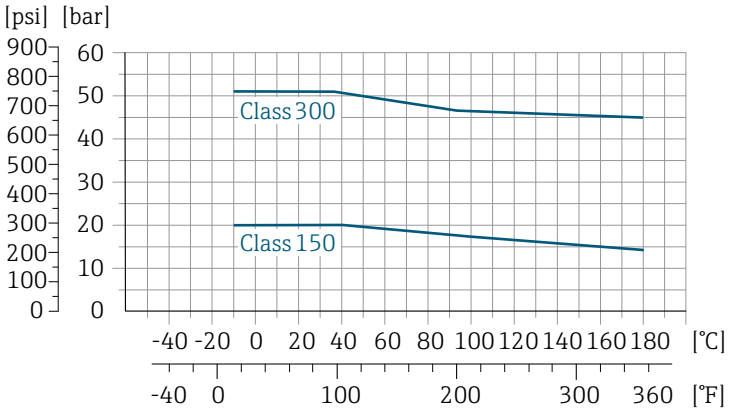

A0029393-EN

Fixed flange similar to JIS B2220

Stainless steel (−20 °C (−4 °F))
Carbon steel (−10 °C (14 °F))

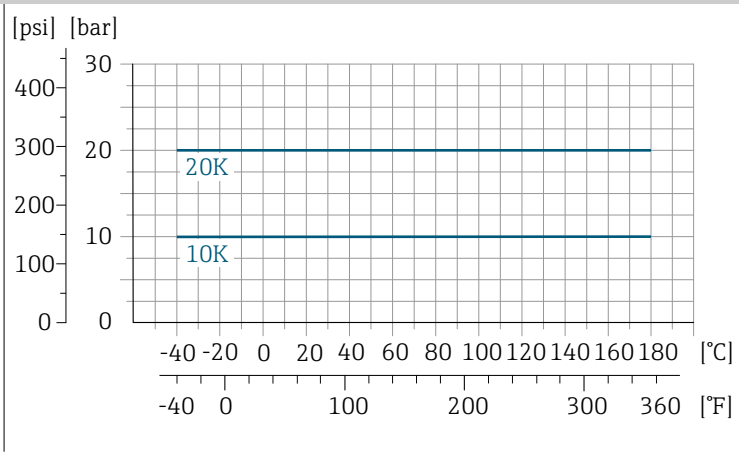

Fixed flange similar to AS 2129

Carbon steel

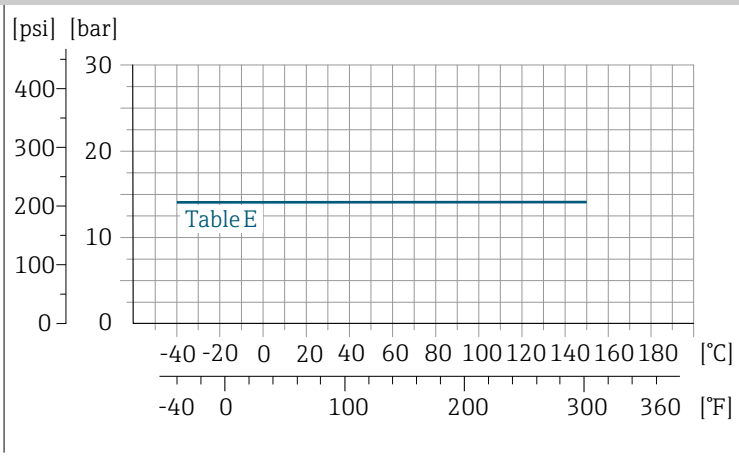

Fixed flange similar to AS 4087

Carbon steel

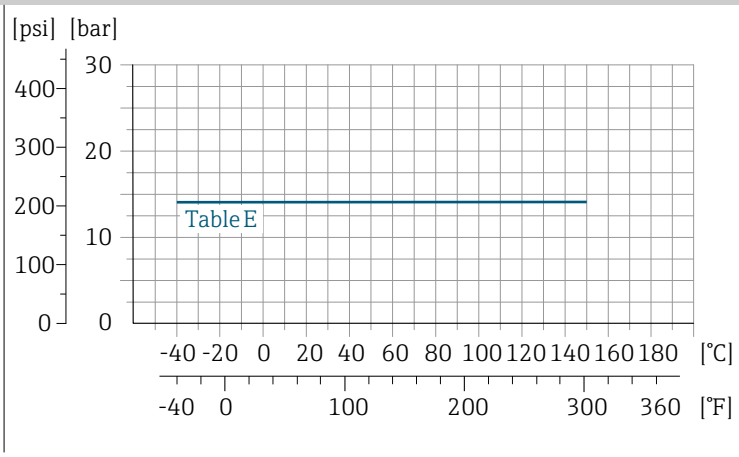

Lap joint flange/lap joint flange, stamped plate similar to EN 1092-1 and ASME B16.5	
Stainless steel (−20 °C (−4 °F)) Carbon steel (−10 °C (14 °F))	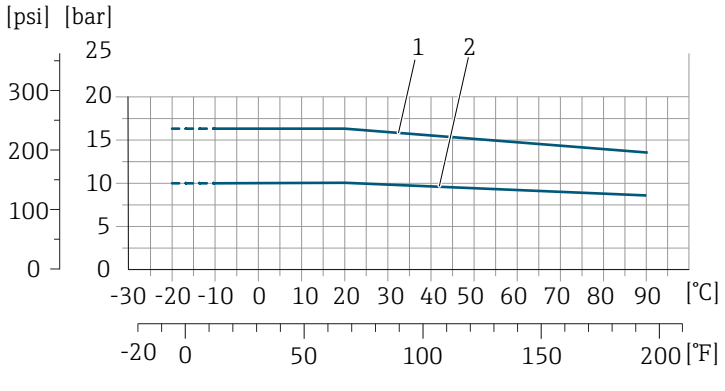 *1 Lap joint flange PN16/Class 150* *2 Lap joint flange, stamped plate PN10, lap joint flange PN10*

Pressure tightness

Limit values for the absolute pressure depending on the liner and medium temperature

PFA	Nominal diameter		Absolute pressure in [mbar] ([psi])		
	[mm]	[in]	+25 °C (+77 °F)	+80 °C (+176 °F)	+100 to +180 °C (+212 to +356 °F)
	25	1	0 (0)	0 (0)	0 (0)
	32	–	0 (0)	0 (0)	0 (0)
	40	1 ½	0 (0)	0 (0)	0 (0)
	50	2	0 (0)	0 (0)	0 (0)
	65	–	0 (0)	0 (0)	0 (0)
	80	3	0 (0)	0 (0)	0 (0)
	100	4	0 (0)	0 (0)	0 (0)
	125	–	0 (0)	0 (0)	0 (0)
	150	6	0 (0)	0 (0)	0 (0)
	200	8	0 (0)	0 (0)	0 (0)

PTFE	Nominal diameter		Limit values for absolute pressure in [mbar] ([psi]) for medium temperatures:			
	[mm]	[in]	+25 °C (+77 °F)	+80 °C (+176 °F)	+100 °C (+212 °F)	+130 °C (+266 °F)
	15	½	0 (0)	0 (0)	0 (0)	100 (1.45)
	25	1	0 (0)	0 (0)	0 (0)	100 (1.45)
	32	–	0 (0)	0 (0)	0 (0)	100 (1.45)
	40	1 ½	0 (0)	0 (0)	0 (0)	100 (1.45)
	50	2	0 (0)	0 (0)	0 (0)	100 (1.45)
	65	–	0 (0)	–	40 (0.58)	130 (1.89)
	80	3	0 (0)	–	40 (0.58)	130 (1.89)
	100	4	0 (0)	–	135 (1.96)	170 (2.47)
	125	–	135 (1.96)	–	240 (3.48)	385 (5.58)
	150	6	135 (1.96)	–	240 (3.48)	385 (5.58)
	200	8	200 (2.90)	–	290 (4.21)	410 (5.95)

PTFE	Nominal diameter		Limit values for absolute pressure in [mbar] ([psi]) for medium temperatures:			
	[mm]	[in]	+25 °C (+77 °F)	+80 °C (+176 °F)	+100 °C (+212 °F)	+130 °C (+266 °F)
	250	10	330 (4.79)	–	400 (5.80)	530 (7.69)
	300	12	400 (5.80)	–	500 (7.25)	630 (9.14)
	350	14	470 (6.82)	–	600 (8.70)	730 (10.6)
	400	16	540 (7.83)	–	670 (9.72)	800 (11.6)
	450	18	No negative pressure permitted!			
	500	20	No negative pressure permitted!			
	600	24	No negative pressure permitted!			

Pressure loss

- No pressure loss: transmitter installed in a pipe with the same nominal diameter.
- Pressure loss information when adapters are used → *Adapters*, 🖹 47

Mechanical construction

Weight 62
Measuring pipe specification 63
Materials 64
Fitted electrodes 65
Surface roughness 65

Weight

All values refer to devices with flanges with a standard pressure rating.
Weight data are guideline values. The weight may be lower than indicated depending on the pressure rating and design.

Different values due to different transmitter versions:
Transmitter version for the hazardous area:+1 kg (+2.2 lbs)
Transmitter version, order code for "Housing", option D "Polycarbonate: −1 kg (−2.2 lbs)

Transmitter remote version
- Polycarbonate: 1.4 kg (3.1 lbs)
- Aluminum: 2.4 kg (5.3 lbs)

Sensor remote version
Aluminum sensor connection housing: see the information in the following table.

Weight in SI units

Nominal diameter		EN (DIN), AS [1]		ASME		JIS	
[mm]	[in]	Pressure rating	[kg]	Pressure rating	[kg]	Pressure rating	[kg]
15	½	PN 40	7.2	Class 150	7.2	10K	4.5
25	1	PN 40	8.0	Class 150	8.0	10K	5.3
32	–	PN 40	8.7	Class 150	–	10K	5.3
40	1 ½	PN 40	10.1	Class 150	10.1	10K	6.3
50	2	PN 40	11.3	Class 150	11.3	10K	7.3
65	–	PN 16	12.7	Class 150	–	10K	9.1
80	3	PN 16	14.7	Class 150	14.7	10K	10.5
100	4	PN 16	16.7	Class 150	16.7	10K	12.7
125	–	PN 16	22.2	Class 150	–	10K	19
150	6	PN 16	26.2	Class 150	26.2	10K	22.5
200	8	PN 10	45.7	Class 150	45.7	10K	39.9
250	10	PN 10	65.7	Class 150	75.7	10K	67.4
300	12	PN 10	70.7	Class 150	111	10K	70.3
350	14	PN 10	105.7	Class 150	176	10K	79
400	16	PN 10	120.7	Class 150	206	10K	100
450	18	PN 10	161.7	Class 150	256	10K	128
500	20	PN 10	156.7	Class 150	286	10K	142
600	24	PN 10	208.7	Class 150	406	10K	188

1) For flanges according to AS, only DN 25 and 50 are available.

Weight in US units

Nominal diameter		ASME	
[mm]	[in]	Pressure rating	[lbs]
15	½	Class 150	15.9
25	1	Class 150	17.6
40	1 ½	Class 150	22.3
50	2	Class 150	24.9
80	3	Class 150	32.4
100	4	Class 150	36.8
150	6	Class 150	57.7

Nominal diameter		ASME	
[mm]	[in]	Pressure rating	[lbs]
200	8	Class 150	101
250	10	Class 150	167
300	12	Class 150	244
350	14	Class 150	387
400	16	Class 150	454
450	18	Class 150	564
500	20	Class 150	630
600	24	Class 150	895

Measuring pipe specification

Nominal diameter		Rating					Process connection internal diameter			
		EN (DIN)	ASME	AS 2129	AS 4087	JIS	PFA		PTFE	
[mm]	[in]	[bar]	[psi]	[bar]	[bar]	[bar]	[mm]	[in]	[mm]	[in]
15	½	PN 40	Class 150	–	–	20K	–	–	15	0.59
25	1	PN 40	Class 150	Table E	–	20K	23	0.91	26	1.02
32	–	PN 40	–	–	–	20K	32	1.26	35	1.38
40	1 ½	PN 40	Class 150	–	–	20K	36	1.42	41	1.61
50	2	PN 40	Class 150	Table E	PN 16	10K	48	1.89	52	2.05
65	–	PN 16	–	–	–	10K	63	2.48	67	2.64
80	3	PN 16	Class 150	–	–	10K	75	2.95	80	3.15
100	4	PN 16	Class 150	–	–	10K	101	3.98	104	4.09
125	–	PN 16	–	–	–	10K	126	4.96	129	5.08
150	6	PN 16	Class 150	–	–	10K	154	6.06	156	6.14
200	8	PN 10	Class 150	–	–	10K	201	7.91	202	7.95
250	10	PN 10	Class 150	–	–	10K	–	–	256	10.1
300	12	PN 10	Class 150	–	–	10K	–	–	306	12.0
350	14	PN 10	Class 150	–	–	10K	–	–	337	13.3
400	16	PN 10	Class 150	–	–	10K	–	–	387	15.2
450	18	PN 10	Class 150	–	–	10K	–	–	432	17.0
500	20	PN 10	Class 150	–	–	10K	–	–	487	19.2
600	24	PN 10	Class 150	–	–	10K	–	–	593	23.3

Materials

Transmitter housing	
Order code for "Housing"	▪ Option A: Compact, coated aluminum ▪ Option B: Compact, coated aluminum + polycarbonate inspection window ▪ Option N: Remote, polycarbonate ▪ Option P: Remote, aluminum, coated ▪ Option T: Remote, aluminum, coated + polycarbonate inspection window
Window material	▪ Order code for "Housing", option A: glass ▪ Order code for "Housing", option G: polycarbonate ▪ Order code for "Housing", option N: polycarbonate ▪ Order code for "Housing", option P: glass ▪ Order code for "Housing", option T: polycarbonate
Neck adapter	Order code for "Housing", option A, : Aluminum, coated
Sensor connection housing	
	Aluminum, AlSi10Mg, coated
Cable glands and entries	
Cable gland M20×1.5	▪ Non-hazardous area: plastic ▪ Hazardous area: brass
Adapter for cable entry with G ½" or NPT ½" female thread	Nickel-plated brass
Connecting cable for remote version	
	Electrode and coil current cable: PVC cable with copper shield
Sensor housing	
DN 25 to 300 (1 to 12")	▪ Aluminum half-shell housing: aluminum, AlSi10Mg, coated ▪ Fully welded carbon steel housing with protective varnish
DN 350 to 600 (14 to 24")	Fully welded carbon steel housing with protective varnish
Measuring tubes	
DN 25 to 600 (1 to 24")	Stainless steel: 1.4301, 1.4306, 304, 304L
Liner	
DN 25 to 200 (1 to 8")	PFA
DN 15 to 600 (1 to 24")	PTFE
Electrodes	
	▪ 1.4435 (316L) ▪ Alloy C22, 2.4602 (UNS N06022) ▪ Tantalum ▪ Platinum ▪ Titanium
Seals	
	As per DIN EN 1514-1, Form IBC

Process connections	
EN 1092-1 (DIN 2501)	Fixed flange ▪ Carbon steel: ▪ DN ≤ 300: S235JRG2, S235JR+N, P245GH, A105, E250C ▪ DN 350 to 600: P245GH, S235JRG2, A105, E250C ▪ Stainless steel: ▪ DN ≤ 300: 1.4404, 1.4571, F316L ▪ DN 350 to 600: 1.4571, F316L, 1.4404 Lap joint flange ▪ Carbon steel DN ≤ 300: S235JRG2, A105, E250C ▪ Stainless steel DN ≤ 300: 1.4306,1.4404, 1.4571, F316L Lap joint flange, stamped plate ▪ Carbon steel DN ≤ 300: S235JRG2 similar to S235JR+AR or 1.0038 ▪ Stainless steel DN ≤ 300: 1.4301 similar to 304
ASME B16.5	▪ Carbon steel: A105 ▪ Stainless steel: F316L
JIS B2220	▪ Carbon steel: A105, A350 LF2 ▪ Stainless steel: F316L
AS 2129	Carbon steel: A105, E250C, P235GH, P265GH, S235JRG2
AS 4087	Carbon steel: A105, P265GH, S275JR

Accessories	
Weather protection cover	Stainless steel, 1.4404 (316L)
Pipe mounting kit (welding jig)	Stainless steel 1.4301 (304)
Wall mounting kit	Stainless steel 1.4301 (304)
Ground disks	15 to 1200 mm (½ to 48 in) ▪ Stainless steel, 1.4435 (316L) ▪ Alloy C22, 2.4602 (UNS N06022)

Fitted electrodes

Standard electrodes:
- Measuring electrodes
- Reference electrodes
- Empty pipe detection electrodes

Surface roughness

All data relate to parts in contact with medium.

Stainless steel electrodes, 1.4435 (F316L); Alloy C22, 2.4602 (UNS N06022), platinum , tantalum
≤ 0.3 to 0.5 µm (11.8 to 19.7 µin)

Liner with PFA:
≤ 0.4 µm (15.7 µin)

Dimensions in SI units

Compact version 68
Order code for "Housing", option A "Aluminum, coated" 68
Order code for "Housing", option A "Aluminum, coated"; Zone 1, Division 1 69
Order code for "Housing", option M "Compact, polycarbonate" 70

Remote version 71
Transmitter remote version 71
Sensor remote version 72

Fixed flange 73
Flange similar to EN 1092-1 (DIN 2501/DIN 2512N): PN 10 73
Flange similar to EN 1092-1 (DIN 2501/DIN 2512N): PN 16 74
Flange similar to EN 1092-1 (DIN 2501/DIN 2512N): PN 25 75
Flange similar to EN 1092-1: PN 40 76
Flange similar to ASME B16.5, Class 150 77
Flange similar to ASME B16.5, Class 300 78
Flange similar to JIS B2220, 10K 79
Flange similar to JIS B2220, 20K 80
Flange similar to AS 2129, Tab. E 81
Flange similar to AS 4087, PN 16 82

Lap joint flange 83
Lap joint flange similar to EN 1092-1: PN 10 83
Lap joint flange similar to EN 1092-1: PN 16 84
Lap joint flange similar to ASME B16.5, Class 150 85

Lap joint flange, stamped plate 86
Lap joint flange, stamping plate similar to EN 1092-1: PN 10 86

Accessories 87
Weather protection cover 87
Ground disks for flanges 87

Compact version

Order code for "Housing", option A "Aluminum, coated"

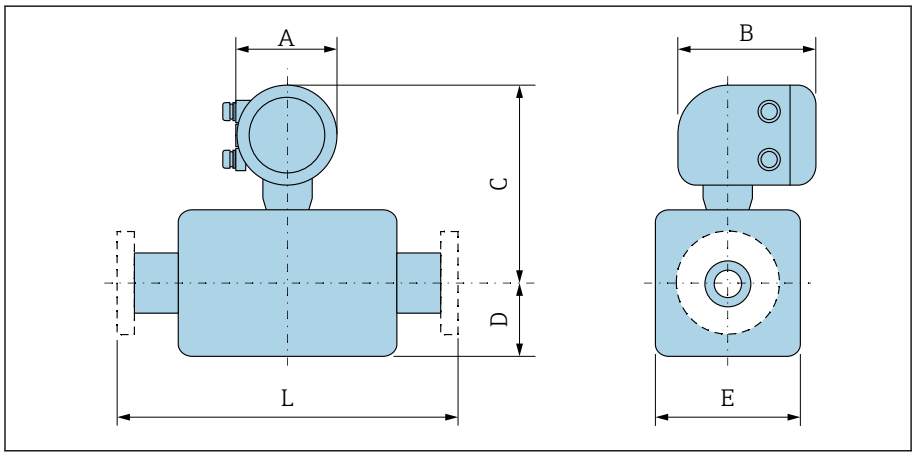

A0042708

DN		A [1]	B	C [2]	D	E	L [3]
[mm]	[in]	[mm]	[mm]	[mm]	[mm]	[mm]	[mm]
15	½	139	178	258	84	120	200
25	1	139	178	258	84	120	200
32	–	139	178	258	84	120	200
40	1 ½	139	178	258	84	120	200
50	2	139	178	258	84	120	200
65	–	139	178	283	109	180	200
80	3	139	178	283	109	180	200
100	4	139	178	283	109	180	250
125	–	139	178	323	150	260	250
150	6	139	178	323	150	260	300
200	8	139	178	348	180	324	350
250	10	139	178	373	205	400	450
300	12	139	178	398	230	460	500
350	14	139	178	457	282	564	550
400	16	139	178	483	308	616	600
450	18	139	178	508	333	666	650
500	20	139	178	533	359	717	650
600	24	139	178	586	411	821	780

1) Depending on the cable gland used: values up to +30 mm
2) With order code for "Sensor option", option CG "Sensor extended neck for insulation": values + 110 mm
3) Total installed length is independent of the process connections. Installed length according to DVGW (German Technical and Scientific Association for Gas and Water).

Order code for "Housing", option A "Aluminum, coated"; Zone 1, Division 1

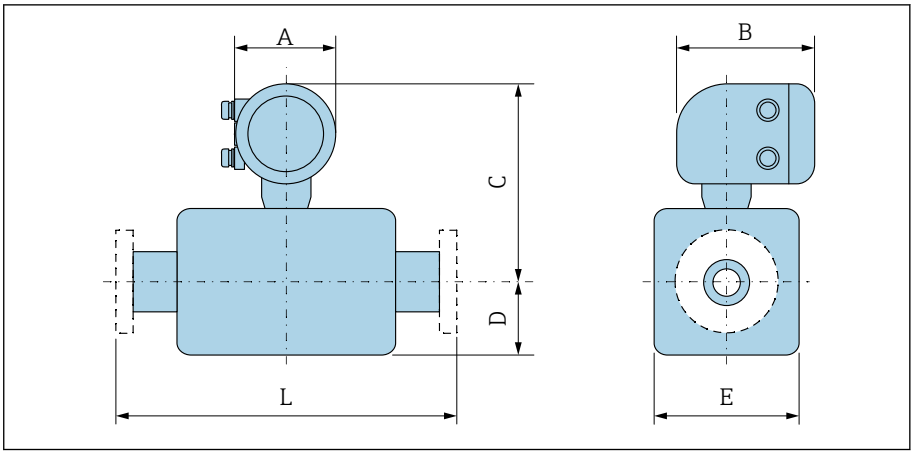

A0042708

DN		A [1]	B [2]	C [3]	D	E	L [4]
[mm]	[in]	[mm]	[mm]	[mm]	[mm]	[mm]	[mm]
15	½	139	206	281	84	120	200
25	1	139	206	281	84	120	200
32	–	139	206	281	84	120	200
40	1 ½	139	206	281	84	120	200
50	2	139	206	281	84	120	200
65	–	139	206	306	109	180	200
80	3	139	206	306	109	180	200
100	4	139	206	306	109	180	250
125	–	139	206	346	150	260	250
150	6	139	206	346	150	260	300
200	8	139	206	371	180	324	350
250	10	139	206	396	205	400	450
300	12	139	206	421	230	460	500
350	14	139	206	480	282	564	550
400	16	139	206	506	308	616	600
450	18	139	206	531	333	666	650
500	20	139	206	556	359	717	650
600	24	139	206	609	411	821	780

1) Depending on the cable gland used: values up to +30 mm
2) For Ex de: values +10 mm
3) With order code for "Sensor option", option CG "Sensor extended neck for insulation": values +110 mm
4) Total installed length is independent of the process connections. Installed length according to DVGW (German Technical and Scientific Association for Gas and Water).

Order code for "Housing", option M "Compact, polycarbonate"

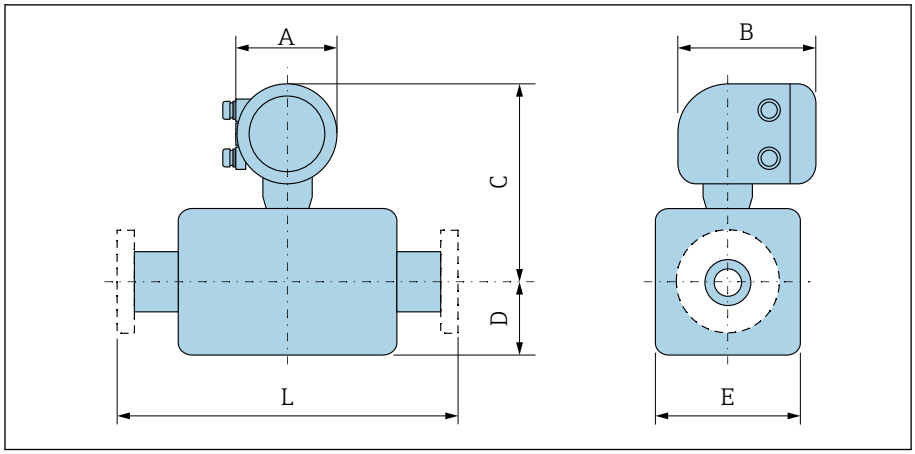

A0042708

DN		A [1]	B	C [2]	D	E	L [3]
[mm]	[in]	[mm]	[mm]	[mm]	[mm]	[mm]	[mm]
15	½	132	172	255	84	120	200
25	1	132	172	255	84	120	200
32	–	132	172	255	84	120	200
40	1 ½	132	172	255	84	120	200
50	2	132	172	255	84	120	200
65	–	132	172	280	109	180	200
80	3	132	172	280	109	180	200
100	4	132	172	280	109	180	250
125	–	132	172	320	150	260	250
150	6	132	172	320	150	260	300
200	8	132	172	345	180	324	350
250	10	132	172	370	205	400	450
300	12	132	172	395	230	460	500
350	14	132	172	454	282	564	550
400	16	132	172	480	308	616	600
450	18	132	172	505	333	666	650
500	20	132	172	530	359	717	650
600	24	132	172	583	411	821	780

1) Depending on the cable gland used: values up to +30 mm
2) With order code for "Sensor option", option CG "Sensor extended neck for insulation": values + 110 mm
3) Total installed length is independent of the process connections. Installed length according to DVGW (German Technical and Scientific Association for Gas and Water).

Remote version

Transmitter remote version

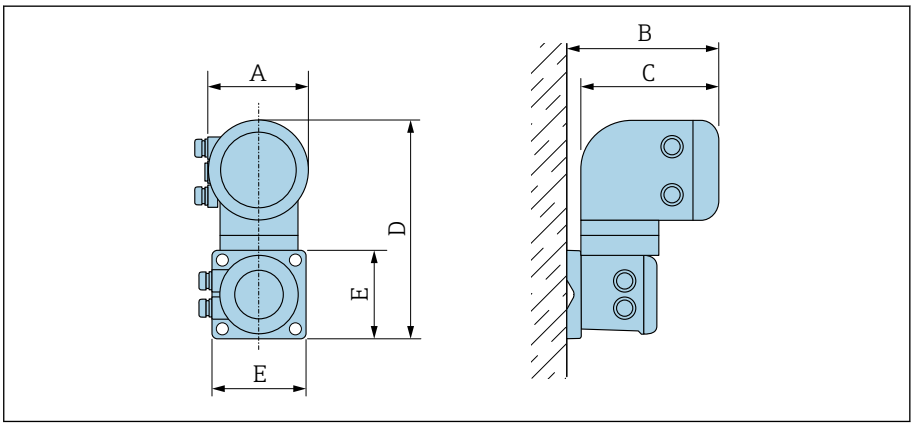

A0042715

Order code for "Housing"	A [1] [mm]	B [mm]	C [mm]	D [mm]	E [mm]
Option N "Remote, polycarbonate"	132	187	172	307	130
Option P and T "Remote, coated aluminum"	139	185	178	309	130

1) Depending on the cable entry used: values up to + 30 mm

Sensor remote version

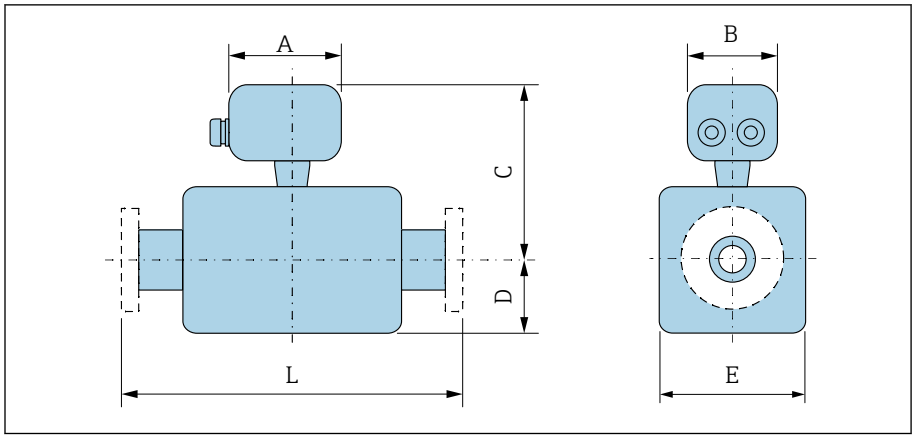

A0042718

DN		A [1]	B	C [2]	D	E	L [3]
[mm]	[in]	[mm]	[mm]	[mm]	[mm]	[mm]	[mm]
15	½	148	136	197	84	120	200
25	1	148	136	197	84	120	200
32	–	148	136	197	84	120	200
40	1 ½	148	136	197	84	120	200
50	2	148	136	197	84	120	200
65	–	148	136	222	109	180	200
80	3	148	136	222	109	180	200
100	4	148	136	222	109	180	250
125	–	148	136	262	150	260	250
150	6	148	136	262	150	260	300
200	8	148	136	287	180	324	350
250	10	148	136	312	205	400	450
300	12	148	136	337	230	460	500
350	14	148	136	396	282	564	550
400	16	148	136	422	308	616	600
450	18	148	136	447	333	666	650
500	20	148	136	472	359	717	650
600	24	148	136	525	411	821	780

1) Depending on the cable gland used: values up to +30 mm
2) With order code for "Sensor option", option CG "Sensor extended neck for insulation" or order code for "Liner", option B "PFA high temperature": values +110 mm
3) Total installed length is independent of the process connections. Installed length according to DVGW (German Technical and Scientific Association for Gas and Water).

Fixed flange

Flange similar to EN 1092-1 (DIN 2501/DIN 2512N): PN 10

- Carbon steel: order code for "Process connection", option D2K
- Stainless steel: order code for "Process connection", option D2S

Surface roughness: EN 1092-1 Form B1 (DIN 2526 Form C), Ra 6.3 to 12.5 µm

E: Internal diameter depends on the liner → *Measuring pipe specification*, 63.

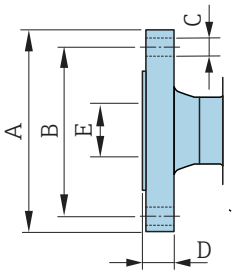

A0041915

DN [mm]	A [mm]	B [mm]	C [mm]	D [mm]
200	340	295	8 × Ø22	26
250	395	350	12 × Ø22	28
300	445	400	12 × Ø22	28
350	505	460	16 × Ø22	26
400	565	515	16 × Ø26	26
450	615	565	20 × Ø26	26
500	670	620	20 × Ø26	28
600	780	725	20 × Ø30	30

Flange similar to EN 1092-1 (DIN 2501/DIN 2512N): PN 16

- Carbon steel: order code for "Process connection", option D3K
- Stainless steel: order code for "Process connection", option D3S

Surface roughness: EN 1092-1 Form B1 (DIN 2526 Form C), Ra 6.3 to 12.5 µm

E: Internal diameter depends on the liner → *Measuring pipe specification*, 63.

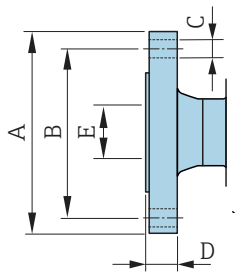

A0041915

DN [mm]	A [mm]	B [mm]	C [mm]	D [mm]
65	185	145	8 × Ø18	20
80	200	160	8 × Ø18	20
100	220	180	8 × Ø18	22
125	250	210	8 × Ø18	24
150	285	240	8 × Ø22	24
200	340	295	12 × Ø22	26
250	405	355	12 × Ø26	32
300	460	410	12 × Ø26	32
350	520	470	16 × Ø26	30
400	580	525	16 × Ø30	32
450	640	585	20 × Ø30	34
500	715	650	20 × Ø33	36
600	840	770	20 × Ø36	40

Flange similar to EN 1092-1 (DIN 2501/DIN 2512N): PN 25

- Carbon steel: order code for "Process connection", option D4K
- Stainless steel: order code for "Process connection", option D4S

Surface roughness: EN 1092-1 Form B1 (DIN 2526 Form C), Ra 6.3 to 12.5 µm

E: Internal diameter depends on the liner → *Measuring pipe specification*, 63.

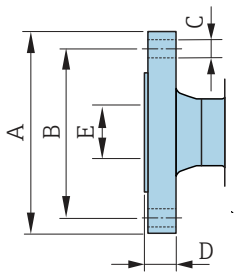

A0041915

DN [mm]	A [mm]	B [mm]	C [mm]	D [mm]
200	360	310	12 × Ø26	32
250	425	370	12 × Ø30	36
300	485	430	16 × Ø30	40
350	555	490	16 × Ø33	38
400	620	550	16 × Ø36	40
450	670	600	20 × Ø36	46
500	730	660	20 × Ø36	48
600	845	770	20 × Ø39	48

Flange similar to EN 1092-1: PN 40

- Carbon steel: order code for "Process connection", option D5K
- Stainless steel: order code for "Process connection", option D5S

Surface roughness: EN 1092-1 Form B1 (DIN 2526 Form C), Ra 6.3 to 12.5 µm

E: Internal diameter depends on the liner → *Measuring pipe specification*, 63.

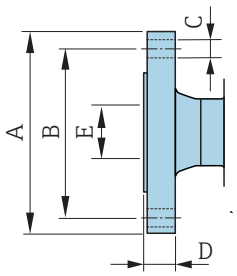

A0041915

DN [mm]	A [mm]	B [mm]	C [mm]	D [mm]
15	95	65	4 × Ø14	14
25	115	85	4 × Ø14	16
32	140	100	4 × Ø18	18
40	150	110	4 × Ø18	18
50	165	125	4 × Ø18	20
65	185	145	8 × Ø18	24
80	200	160	8 × Ø18	26
100	235	190	8 × Ø22	26
125	270	220	8 × Ø26	28
150	300	250	8 × Ø26	30

Flange similar to ASME B16.5, Class 150

- Carbon steel: order code for "Process connection", option A1K
- Stainless steel: order code for "Process connection", option A1S

Surface roughness: Ra 6.3 to 12.5 µm

E: Internal diameter depends on the liner → *Measuring pipe specification*, 63

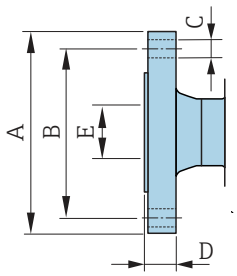

A0041915

DN [mm]	A [mm]	B [mm]	C [mm]	D [mm]
15	88.9	60.5	4 × Ø16	9.6
25	108	79.2	4 × Ø16	12.6
40	127	98.6	4 × Ø16	15.9
50	152.4	120.7	4 × Ø19.1	17.5
80	190.5	152.4	4 × Ø19.1	22.3
100	228.6	190.5	8 × Ø19.1	22.3
150	279.4	241.3	8 × Ø22.4	23.8
200	342.9	298.5	8 × Ø22.4	26.8
250	406.4	362	12 × Ø25.4	29.6
300	482.6	431.8	12 × Ø25.4	30.2
350	535	476.3	12 × Ø28.6	35.4
400	595	539.8	16 × Ø28.6	37
450	635	577.9	16 × Ø31.8	40.1
500	700	635	20 × Ø31.8	43.3
600	815	749.3	20 × Ø34.9	48.1

Flange similar to ASME B16.5, Class 300

- Carbon steel: order code for "Process connection", option A2K
- Stainless steel: order code for "Process connection", option A2S

Surface roughness: Ra 6.3 to 12.5 µm

E: Internal diameter depends on the liner → *Measuring pipe specification*, 📄 63

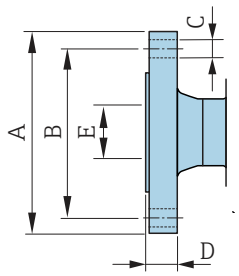

A0041915

DN [mm]	A [mm]	B [mm]	C [mm]	D [mm]
15	95.3	66.5	4 × Ø16	12.6
25	123.9	88.9	4 × Ø19.1	15.9
40	155.4	114.3	4 × Ø22.4	19
50	165.1	127	8 × Ø19.1	20.8
80	209.6	168.1	8 × Ø22.4	26.8
100	254	200.2	8 × Ø22.4	30.2
150	317.5	269.7	12 × Ø22.4	35

Flange similar to JIS B2220, 10K

- Carbon steel: order code for "Process connection", option N3K
- Stainless steel: order code for "Process connection", option N3S

Surface roughness: Ra 6.3 to 12.5 µm

E: Internal diameter depends on the liner → *Measuring pipe specification*, 63

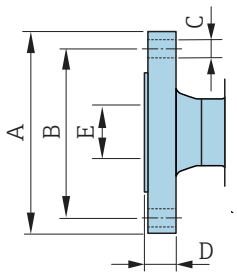

A0041915

DN [mm]	A [mm]	B [mm]	C [mm]	D [mm]
50	155	120	4 × Ø19	16
65	175	140	4 × Ø19	18
80	185	150	8 × Ø19	18
100	210	175	8 × Ø19	18
125	250	210	8 × Ø23	20
150	280	240	8 × Ø23	22
200	330	290	12 × Ø23	22
250	400	355	12 × Ø25	24
300	445	400	16 × Ø25	24

Flange similar to JIS B2220, 20K

- Carbon steel: order code for "Process connection", option N4K
- Stainless steel: order code for "Process connection", option N4S

Surface roughness: Ra 6.3 to 12.5 µm

E: Internal diameter depends on the liner → *Measuring pipe specification*, 63

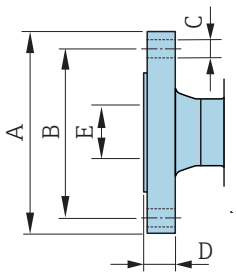

A0041915

DN [mm]	A [mm]	B [mm]	C [mm]	D [mm]
15	95	70	4 × Ø15	14
25	125	90	4 × Ø19	16
32	135	100	4 × Ø19	18
40	140	105	4 × Ø19	18
50	155	120	8 × Ø19	18
65	175	140	8 × Ø19	20
80	200	160	8 × Ø23	22
100	225	185	8 × Ø23	24
125	270	225	8 × Ø25	26
150	305	260	12 × Ø25	28
200	350	305	12 × Ø25	30
250	430	380	12 × Ø27	34
300	480	430	16 × Ø27	36

Flange similar to AS 2129, Tab. E

Order code for "Process connection", option M2K

Surface roughness: Ra 6.3 to 12.5 µm

E: Internal diameter depends on the liner → *Measuring pipe specification*, 📄 63.

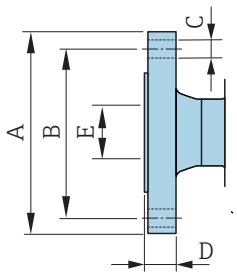

A0041915

DN [mm]	A [mm]	B [mm]	C [mm]	D [mm]
80	185	146	4 × Ø18	12
100	215	178	8 × Ø18	13
150	280	235	8 × Ø22	17
200	335	292	8 × Ø22	19
250	405	356	12 × Ø22	22
300	455	406	12 × Ø26	25
350	525	470	12 × Ø26	30
400	580	521	12 × Ø26	32
450	640	584	16 × Ø26	35
500	705	641	16 × Ø26	38
600	825	756	16 × Ø33	48

Flange similar to AS 4087, PN 16

Order code for "Process connection", option M3K

Surface roughness: Ra 6.3 to 12.5 µm

E: Internal diameter depends on the liner → *Measuring pipe specification*, 63.

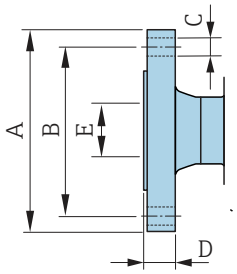

A0041915

DN [mm]	A [mm]	B [mm]	C [mm]	D [mm]
80	185	146	4 × Ø18	12
100	215	178	4 × Ø18	13
150	280	235	8 × Ø18	13
200	335	292	8 × Ø18	19
250	405	356	8 × Ø22	19
300	455	406	12 × Ø22	23
350	525	470	12 × Ø26	30
375	550	495	12 × Ø26	30
400	580	521	12 × Ø26	32
450	640	584	12 × Ø26	30
500	705	641	16 × Ø26	38
600	825	756	16 × Ø30	48

Lap joint flange

Lap joint flange similar to EN 1092-1: PN 10

- Carbon steel: order code for "Process connection", option D22
- Stainless steel: order code for "Process connection", option D24

Surface roughness (flange): Ra 6.3 to 12.5 µm

F: Internal diameter depends on the liner → *Measuring pipe specification*, 63

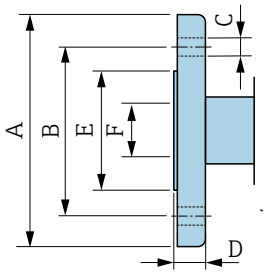

A0042254

DN [mm]	A [mm]	B [mm]	C [mm]	D [mm]	E [mm]
200	340	295	8 × Ø22	24	264
250	395	350	12 × Ø22	26	317
300	445	400	12 × Ø22	26	367

Lap joint flange similar to EN 1092-1: PN 16

- Carbon steel: order code for "Process connection", option D32
- Stainless steel: order code for "Process connection", option D34

Surface roughness (flange): Ra 6.3 to 12.5 µm

F: Internal diameter depends on the liner → *Measuring pipe specification*, 63

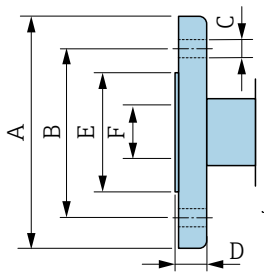

A0042254

DN [mm]	A [mm]	B [mm]	C [mm]	D [mm]	E [mm]
25	115	85	4 × Ø14	16	49
32	140	100	4 × Ø18	18	65
40	150	110	4 × Ø18	18	71
50	165	125	4 × Ø18	20	88
65	185	145	8 × Ø18	20	103
80	200	160	8 × Ø18	20	120
100	220	180	8 × Ø18	22	148
125	250	210	8 × Ø18	22	177
150	285	240	8 × Ø22	24	209
200	340	295	12 × Ø22	26	264
250	405	355	12 × Ø26	29	317
300	460	410	12 × Ø26	32	367

Lap joint flange similar to ASME B16.5, Class 150

- Carbon steel: order code for "Process connection", option A12
- Stainless steel: order code for "Process connection", option A14

Surface roughness (flange): Ra 6.3 to 12.5 µm

F: Internal diameter depends on the liner → *Measuring pipe specification*, 📄 63

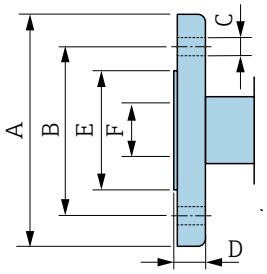

A0042254

DN [mm]	A [mm]	B [mm]	C [mm]	D [mm]	E [mm]
25	110	80	4 × Ø16	14	49
40	125	98	4 × Ø16	17.5	71
50	150	121	4 × Ø19	19	88
80	190	152	4 × Ø19	24	120
100	230	190	8 × Ø19	24	148
150	280	241	8 × Ø23	25	209
200	345	298	8 × Ø23	29	264
250	405	362	12 × Ø25	30	317
300	485	432	12 × Ø25	32	378

Lap joint flange, stamped plate

Lap joint flange, stamping plate similar to EN 1092-1: PN 10

- Carbon steel: order code for "Process connection", option D21
- Stainless steel: order code for "Process connection", option D23

Surface roughness (flange): Ra 6.3 to 12.5 µm

F: Internal diameter depends on the liner → *Measuring pipe specification*, 63

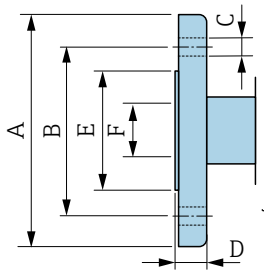

A0042254

DN [mm]	A [mm]	B [mm]	C [mm]	D [mm]	E [mm]
25	115	85	4 x Ø13.5	16.5	49
32	140	100	4 x Ø17.5	17	65
40	150	110	4 x Ø17.5	16.5	71
50	165	125	4 x Ø17.5	18.5	88
65	185	145	4 x Ø17.5	20	103
80	200	160	8 x Ø17.5	23.5	120
100	220	180	8 x Ø17.5	24.5	148
125	250	210	8 x Ø17.5	24	177
150	285	240	8 x Ø21.5	25	209
200	340	295	8 x Ø21.5	27.5	264
250	405	350	12 x Ø21.5	30.5	317
300	445	400	12 x Ø21.5	34.5	367

Accessories

Weather protection cover

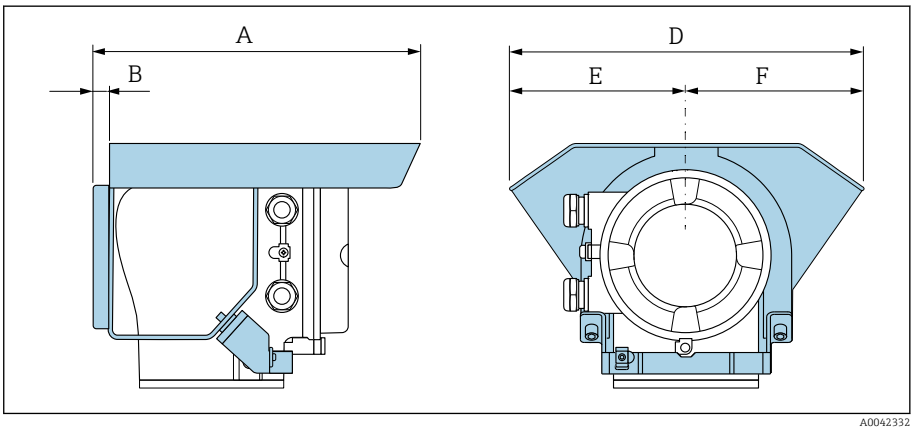

A [mm]	B [mm]	D [mm]	E [mm]	F [mm]
257	12	280	140	140

Ground disks for flanges

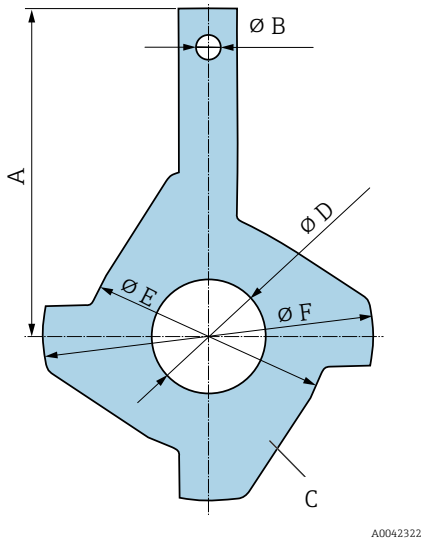

DN 15 to 300 (½ to 12")	DN		Pressure rating	A	B	C [1]	D	E	F
	[mm]	[in]		[mm]	[mm]	[mm]	[mm]	[mm]	[mm]
	15	½"	[2].	73.0	6.5	2	16	43	61.5
	25	1"	[2]	87.5	6.5	2	26	62	77.5
	32	1 ¼"	[2]	94.5	6.5	2	35	80	87.5
	40	1 ½"	[2]	103	6.5	2	41	82	101
	50	2"	[2]	108	6.5	2	52	101	115.5
	65	2 ½"	[2]	118	6.5	2	68	121	131.5
	80	3"	[2]	135	6.5	2	80	131	154.5
	100	4"	[2]	153	6.5	2	104	156	186.5
	125	5"	[2]	160	6.5	2	130	187	206.5
	150	6"	[2]	184	6.5	2	158	217	256
	200	8"	[2]	205	6.5	2	206	267	288
	250	10"	[2]	240	6.5	2	260	328	359
	300	12"	PN 10 PN 16 Cl. 150	273	6.5	2	312	375	413

1) Material thickness
2) In the case of DN 15 to 250, ground disks can be used for all the flange standards/pressure ratings which can be supplied in the standard version.

DN 300 to 600 (12 to 24")	DN		Rating	A	B	C [1]	D	E	F
	[mm]	[in]		[mm]	[mm]	[mm]	[mm]	[mm]	[mm]
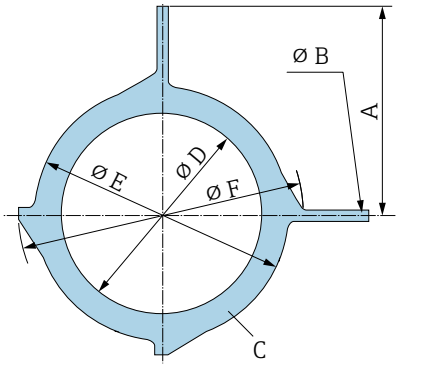	300	12"	PN 25 JIS 10K JIS 20K	268	9	2	310	375	404
	350	14"	PN 6 PN 10 PN 16	365	9	2	343	420	479
	375	15"	PN 16	395	9	2	393	461	523
	400	16"	PN 6 PN 10 PN 16	395	9	2	393	470	542
	450	18"	PN 6 PN 10 PN 16	417	9	2	439	525	583
	500	20"	PN 6 PN 10 PN 16	460	9	2	493	575	650
	600	24"	PN 6 PN 10 PN 16	522	9	2	593	676	766

1) Material thickness

Dimensions in US units

Compact version 90
Order code for "Housing", option A "Aluminum, coated" 90
Order code for "Housing", option A "Aluminum, coated"; Zone 1, Division 1 91
Order code for "Housing", option M "Compact, polycarbonate" 92

Remote version 93
Transmitter remote version 93
Sensor remote version 94

Fixed flange 95
Flange similar to ASME B16.5, Class 150 95
Flange similar to ASME B16.5, Class 300 95

Lap joint flange 96
Lap joint flange similar to ASME B16.5, Class 150 96

Accessories 97
Weather protection cover 97
Ground disks for flanges 97

Compact version

Order code for "Housing", option A "Aluminum, coated"

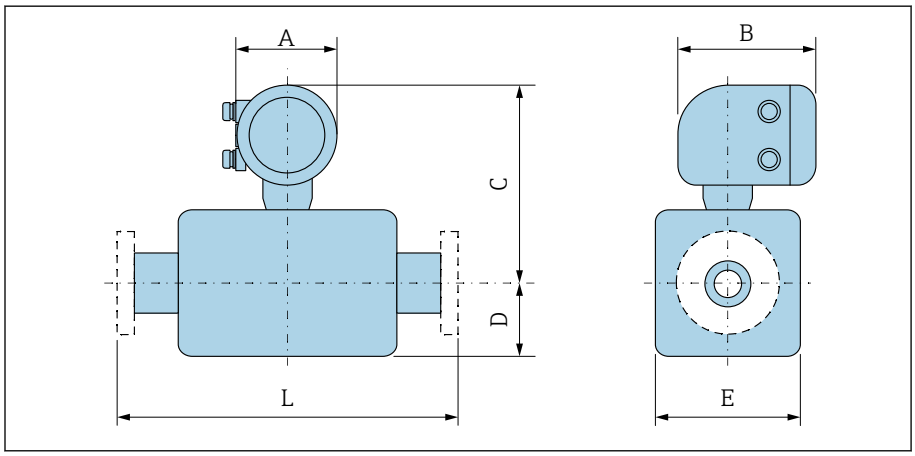

DN		A [1]	B	C [2]	D	E	L [3]
[mm]	[in]	[in]	[in]	[in]	[in]	[in]	[in]
15	½	5.47	7.01	10.16	3.31	4.72	7.87
25	1	5.47	7.01	10.16	3.31	4.72	7.87
32	–	5.47	7.01	10.16	3.31	4.72	7.87
40	1 ½	5.47	7.01	10.16	3.31	4.72	7.87
50	2	5.47	7.01	10.16	3.31	4.72	7.87
65	–	5.47	7.01	11.14	4.29	7.09	7.87
80	3	5.47	7.01	11.14	4.29	7.09	7.87
100	4	5.47	7.01	11.14	4.29	7.09	9.84
125	–	5.47	7.01	12.72	5.91	10.24	9.84
150	6	5.47	7.01	12.72	5.91	10.24	11.81
200	8	5.47	7.01	13.7	7.09	12.76	13.78
250	10	5.47	7.01	14.69	8.07	15.75	17.72
300	12	5.47	7.01	15.67	9.06	18.11	19.69
350	14	5.47	7.01	17.99	11.1	22.2	21.65
400	16	5.47	7.01	19.02	12.13	24.25	23.62
450	18	5.47	7.01	20	13.11	26.22	25.59
500	20	5.47	7.01	20.98	14.13	28.23	25.59
600	24	5.47	7.01	23.07	16.18	32.32	30.71

1) Depending on the cable gland used: values up to +1.18 in
2) With order code for "Sensor option", option CG "Sensor extended neck for insulation": values +4.33 in
3) Total installed length is independent of the process connections. Installed length according to DVGW (German Technical and Scientific Association for Gas and Water).

Order code for "Housing", option A "Aluminum, coated"; Zone 1, Division 1

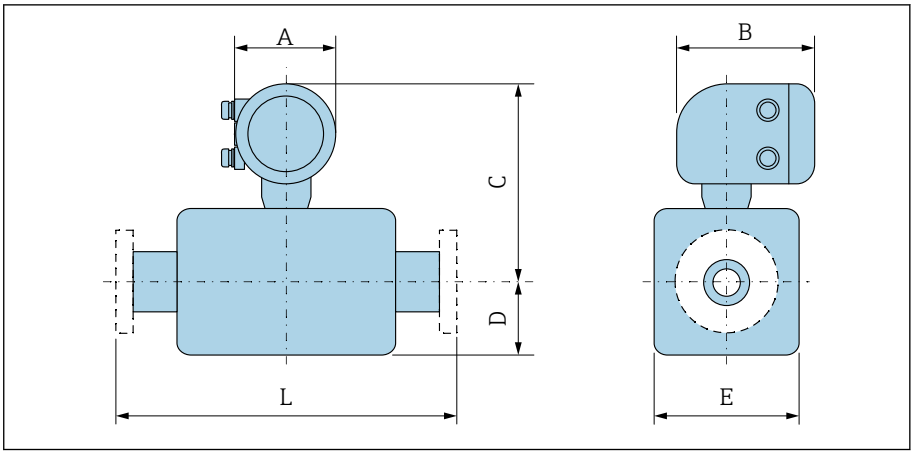

A0042708

DN		A [1]	B [2]	C [3]	D	E	L [4]
[mm]	[in]	[in]	[in]	[in]	[in]	[in]	[in]
15	½	5.47	8.11	11.06	3.31	4.72	7.87
25	1	5.47	8.11	11.06	3.31	4.72	7.87
32	–	5.47	8.11	11.06	3.31	4.72	7.87
40	1 ½	5.47	8.11	11.06	3.31	4.72	7.87
50	2	5.47	8.11	11.06	3.31	4.72	7.87
65	–	5.47	8.11	12.05	4.29	7.09	7.87
80	3	5.47	8.11	12.05	4.29	7.09	7.87
100	4	5.47	8.11	12.05	4.29	7.09	9.84
125	–	5.47	8.11	13.62	5.91	10.24	9.84
150	6	5.47	8.11	13.62	5.91	10.24	11.81
200	8	5.47	8.11	14.61	7.09	12.76	13.78
250	10	5.47	8.11	15.59	8.07	15.75	17.72
300	12	5.47	8.11	16.57	9.06	18.11	19.69
350	14	5.47	8.11	18.9	11.1	22.2	21.65
400	16	5.47	8.11	19.92	12.13	24.25	23.62
450	18	5.47	8.11	20.91	13.11	26.22	25.59
500	20	5.47	8.11	21.89	14.13	28.23	25.59
600	24	5.47	8.11	23.98	16.18	32.32	30.71

1) Depending on the cable gland used: values up to +1.18 in
2) For Ex de: values +0.39 in
3) With order code for "Sensor option", option CG "Sensor extended neck for insulation": values +4.33 in
4) Total installed length is independent of the process connections. Installed length according to DVGW (German Technical and Scientific Association for Gas and Water).

Order code for "Housing", option M "Compact, polycarbonate"

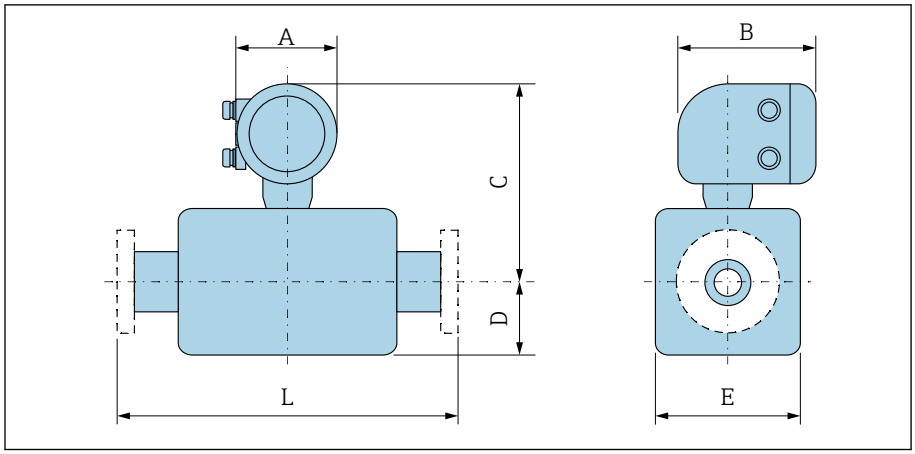

A0042708

DN		A [1]	B	C [2]	D	E	L [3]
[mm]	[in]	[in]	[in]	[in]	[in]	[in]	[in]
15	½	5.2	6.77	10.04	3.31	4.72	7.87
25	1	5.2	6.77	10.04	3.31	4.72	7.87
32	–	5.2	6.77	10.04	3.31	4.72	7.87
40	1 ½	5.2	6.77	10.04	3.31	4.72	7.87
50	2	5.2	6.77	10.04	3.31	4.72	7.87
65	–	5.2	6.77	11.02	4.29	7.09	7.87
80	3	5.2	6.77	11.02	4.29	7.09	7.87
100	4	5.2	6.77	11.02	4.29	7.09	9.84
125	–	5.2	6.77	12.6	5.91	10.24	9.84
150	6	5.2	6.77	12.6	5.91	10.24	11.81
200	8	5.2	6.77	13.58	7.09	12.76	13.78
250	10	5.2	6.77	14.57	8.07	15.75	17.72
300	12	5.2	6.77	15.55	9.06	18.11	19.69
350	14	5.2	6.77	17.87	11.1	22.2	21.65
400	16	5.2	6.77	18.9	12.13	24.25	23.62
450	18	5.2	6.77	19.88	13.11	26.22	25.59
500	20	5.2	6.77	20.87	14.13	28.23	25.59
600	24	5.2	6.77	22.95	16.18	32.32	30.71

1) Depending on the cable gland used: values up to +1.18 in
2) With order code for "Sensor option", option CG "Sensor extended neck for insulation": values +4.33 in
3) Total installed length is independent of the process connections. Installed length according to DVGW (German Technical and Scientific Association for Gas and Water).

Remote version

Transmitter remote version

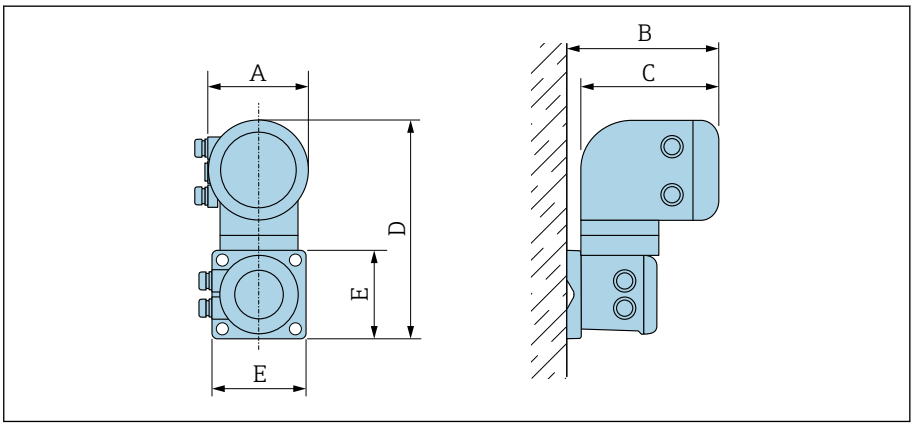

A0042715

Order code for "Housing"	A [1] [in]	B [in]	C [in]	D [in]	E [in]
Option N "Remote, polycarbonate"	5.2	7.36	6.77	12.09	5.12
Option P and T "Remote, coated aluminum"	5.47	7.28	7.01	12.17	5.12

1) Depending on the cable entry used: values up to +1.18 in

Sensor remote version

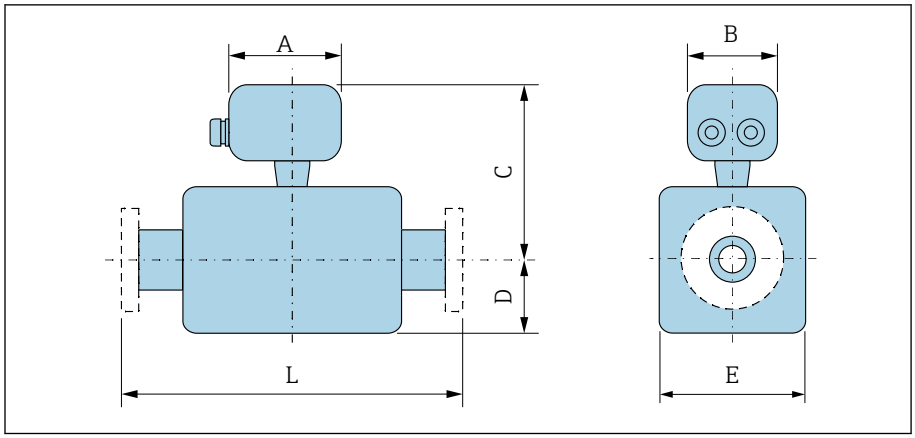

A0042718

DN		A [1]	B	C [2]	D	E	L [3]
[mm]	[in]	[in]	[in]	[in]	[in]	[in]	[in]
15	½	5.83	5.35	7.76	3.31	4.72	7.87
25	1	5.83	5.35	7.76	3.31	4.72	7.87
32	–	5.83	5.35	7.76	3.31	4.72	7.87
40	1 ½	5.83	5.35	7.76	3.31	4.72	7.87
50	2	5.83	5.35	7.76	3.31	4.72	7.87
65	–	5.83	5.35	8.74	4.29	7.09	7.87
80	3	5.83	5.35	8.74	4.29	7.09	7.87
100	4	5.83	5.35	8.74	4.29	7.09	9.84
125	–	5.83	5.35	10.31	5.91	10.24	9.84
150	6	5.83	5.35	10.31	5.91	10.24	11.81
200	8	5.83	5.35	11.3	7.09	12.76	13.78
250	10	5.83	5.35	12.28	8.07	15.75	17.72
300	12	5.83	5.35	13.27	9.06	18.11	19.69
350	14	5.83	5.35	15.59	11.1	22.2	21.65
400	16	5.83	5.35	16.61	12.13	24.25	23.62
450	18	5.83	5.35	17.6	13.11	26.22	25.59
500	20	5.83	5.35	18.58	14.13	28.23	25.59
600	24	5.83	5.35	20.67	16.18	32.32	30.71

1) Depending on the cable gland used: values up to +1.18 in
2) With order code for "Sensor option", option CG "Sensor extended neck for insulation" or order code for "Liner", option B "PFA high temperature": values +4.33 in
3) Total installed length is independent of the process connections. Installed length according to DVGW (German Technical and Scientific Association for Gas and Water).

Fixed flange

Flange similar to ASME B16.5, Class 150

- Carbon steel: order code for "Process connection", option A1K
- Stainless steel: order code for "Process connection", option A1S

Surface roughness: Ra 250 to 492 µin

E: Internal diameter depends on the liner → *Measuring pipe specification*, 63

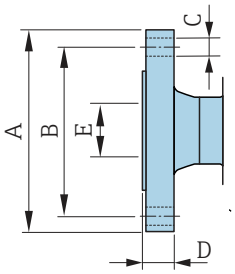

A0041915

DN [in]	A [in]	B [in]	C [in]	D [in]
½	3.50	2.38	4 × Ø0.63	0.38
1	4.25	3.12	4 × Ø0.63	0.5
1 ½	5	3.88	4 × Ø0.63	0.63
2	6	4.75	4 × Ø0.75	0.69
3	7.5	6	4 × Ø0.75	0.88
4	9	7.5	8 × Ø0.75	0.88
6	11	9.5	8 × Ø0.88	0.94
8	13.5	11.75	8 × Ø0.88	1.06
10	16	14.25	12 × Ø1	1.17
12	19	17	12 × Ø1	1.19
14	21.06	18.75	12 × Ø1.13	1.39
16	23.43	21.25	16 × Ø1.13	1.46
18	25	22.75	16 × Ø1.25	1.58
20	27.56	25	20 × Ø1.25	1.7
24	32.09	29.5	20 × Ø1.37	1.89

Flange similar to ASME B16.5, Class 300

- Carbon steel: order code for "Process connection", option A2K
- Stainless steel: order code for "Process connection", option A2S

Surface roughness: Ra 250 to 492 µin

E: Internal diameter depends on the liner → *Measuring pipe specification*, 63

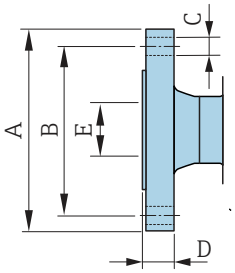

A0041915

DN [in]	A [in]	B [in]	C [in]	D [in]
½	3.75	2.62	4 × Ø0.63	0.50
1	4.88	3.5	4 × Ø0.75	0.63
1 ½	6.12	4.5	4 × Ø0.88	0.75
2	6.5	5	8 × Ø0.75	0.82
3	8.25	6.62	8 × Ø0.88	1.06
4	10	7.88	8 × Ø0.88	1.19
6	12.5	10.62	12 × Ø0.88	1.38

Lap joint flange

Lap joint flange similar to ASME B16.5, Class 150

- **Carbon steel:** order code for "Process connection", option A12
- **Stainless steel:** order code for "Process connection", option A14

Surface roughness (flange): Ra 248 to 492 µin

F: Internal diameter depends on the liner → *Measuring pipe specification*, 63

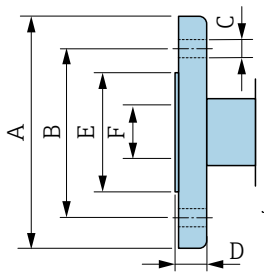

A0042254

DN [in]	A [in]	B [in]	C [in]	D [in]	E [in]
1	4.33	3.15	4 × Ø0.63	0.55	1.93
1 ½	4.92	3.86	4 × Ø0.63	0.69	2.8
2	5.91	4.76	4 × Ø0.75	0.75	3.46
3	7.48	5.98	4 × Ø0.75	0.94	4.72
4	9.06	7.48	8 × Ø0.75	0.94	5.83
6	11.02	9.49	8 × Ø0.91	0.98	8.23
8	13.58	11.73	8 × Ø0.91	1.14	10.39
10	15.94	14.25	12 × Ø0.98	1.18	12.48
12	19.09	17.01	12 × Ø0.98	1.26	14.88

Accessories

Weather protection cover

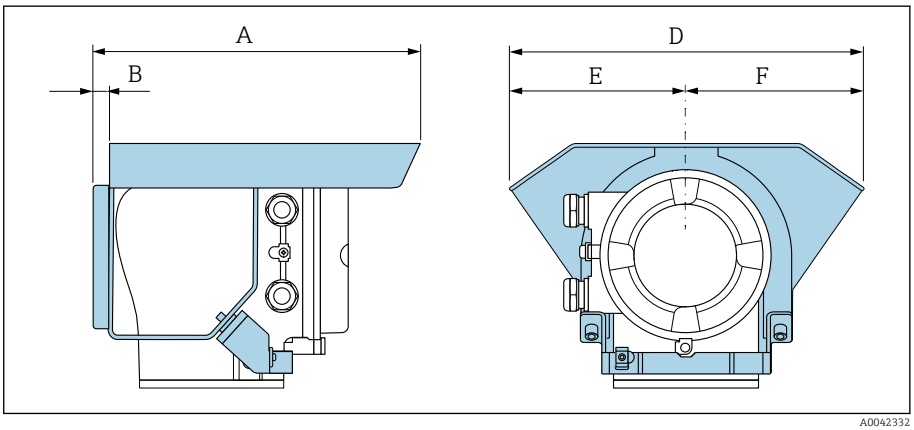

A [in]	B [in]	D [in]	E [in]	F [in]
10.12	0.47	11.02	5.51	5.51

Ground disks for flanges

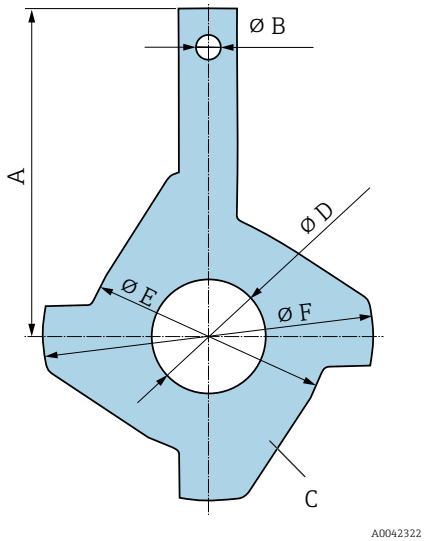

DN 15 to 300 (½ to 12")	DN		Pressure rating	A	B	C [1]	D	E	F
	[mm]	[in]		[in]	[in]	[in]	[in]	[in]	[in]
	15	½"	[2].	2.87	0.26	0.08	0.63	1.69	2.42
	25	1"	[2]	3.44	0.26	0.08	1.02	2.44	3.05
	32	1 ¼"	[2]	3.72	0.26	0.08	1.38	3.15	3.44
	40	1 ½"	[2]	4.06	0.26	0.08	1.61	3.23	3.98
	50	2"	[2]	4.25	0.26	0.08	2.05	3.98	4.55
	65	2 ½"	[2]	4.65	0.26	0.08	2.68	4.76	5.18
	80	3"	[2]	5.31	0.26	0.08	3.15	5.16	6.08
	100	4"	[2]	6.02	0.26	0.08	4.09	6.14	7.34
	125	5"	[2]	6.3	0.26	0.08	5.12	7.36	8.13
	150	6"	[2]	7.24	0.26	0.08	6.22	8.54	10.08
	200	8"	[2]	8.07	0.26	0.08	8.11	10.51	11.34
	250	10"	[2]	9.45	0.26	0.08	10.24	12.91	14.13
	300	12"	PN 10 PN 16 Cl. 150	10.75	0.26	0.08	12.28	14.76	16.26

1) Material thickness
2) In the case of DN ½ to 10", ground disks can be used for all the flange standards/pressure ratings which can be supplied in the standard version.

DN 300 to 600 (12 to 24")	DN		Rating	A	B	C [1]	D	E	F
	[mm]	[in]		[in]	[in]	[in]	[in]	[in]	[in]
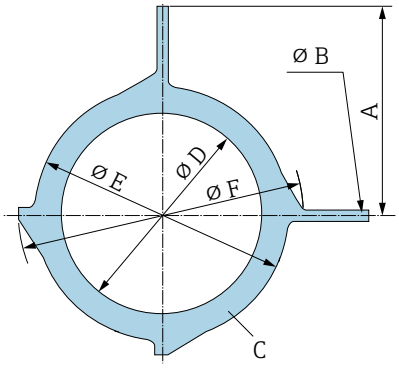	300	12"	PN 25 JIS 10K JIS 20K	10.55	0.35	0.08	12.2	14.76	15.91
	350	14"	PN 6 PN 10 PN 16	14.37	0.35	0.08	13.5	16.54	18.86
	375	15"	PN 16	15.55	0.35	0.08	15.47	18.15	20.59
	400	16"	PN 6 PN 10 PN 16	15.55	0.35	0.08	15.47	18.5	21.34
	450	18"	PN 6 PN 10 PN 16	16.42	0.35	0.08	17.28	20.67	22.95
	500	20"	PN 6 PN 10 PN 16	18.11	0.35	0.08	19.41	22.64	25.59
	600	24"	PN 6 PN 10 PN 16	20.55	0.35	0.08	23.35	26.61	30.16

1) Material thickness

Local display

Operation concept 100
Operation options 101
Operating tools 101

Operation concept

Operation method	Operation via local display with touchscreen [1] Operation via: ▪ SmartBlue app [2] ▪ Commubox FXA291
Reliable operation	▪ Operation in local language ▪ Uniform operating philosophy in device and in the SmartBlue App ▪ Write protection ▪ When electronics modules are replaced: configurations are transferred using the T-DAT Backup device memory. The device memory contains process data, device data and the event logbook. No reconfiguration is necessary.
Diagnostic behavior	Efficient diagnostic behavior increases measurement availability: ▪ Open remedial actions via local display and SmartBlue app ▪ Diverse simulation options ▪ Logbook of events that have occurred

1) Only for HART and Modbus RS485 communication protocols
2) Optional via order code "Display; operation", options H, J or K

IO-Link

The device-specific parameters are configured via IO-Link. There are specific configuration or operating programs from different manufacturers available to the user for this purpose. The device description file (IODD) is provided for the device.

IO-Link operating concept
Operator-oriented menu structure for user-specific tasks. Efficient diagnostic behavior increases measurement availability:
- Diagnostic messages
- Remedial action
- Simulation options

IODD download
Two options to download the IODD :
- www.endress.com/download
- https://ioddfinder.io-link.com/

www.endress.com/download

1. Select "Device Drivers".
2. Select the "IO Device Description (IODD)" entry under "Type".
3. Select "Product root".
4. Click "Search".
   ↳ A list of search results is displayed.

Select the appropriate version and download.

https://ioddfinder.io-link.com/

1. Enter "Endress" as the manufacturer and select.
2. Select product name.
   ↳ A list of search results is displayed.

Select the appropriate version and download.

For detailed IO-Link information, see "IO-Link" Special Documentation for the device
→ *Related documentation*, 🖹 4

Operation options

Local display	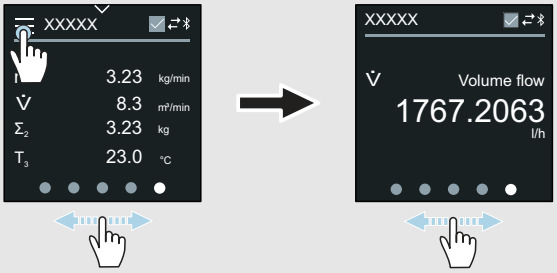 A0042957 11 *Only for HART and Modbus RS485 communication protocols* Display elements: ▪ LCD touch screen [1)] ▪ Depends on the orientation, automatic alignment of the local display ▪ Configuration of display format for measured variables and status variables Operating elements: ▪ Touch screen [1)] ▪ Local display can also be accessed in the hazardous area
SmartBlue app	▪ The SmartBlue app allows the user to put devices into operation and operate them. ▪ Based on Bluetooth ▪ No separate driver required ▪ Available for mobile handheld terminals, tablets and smartphones ▪ Suitable for convenient and secure access to devices in hard-to-reach locations or in hazardous areas ▪ Can be used within a 20 m (65.6 ft) radius of the device ▪ Encrypted and secure data transmission ▪ No data loss during commissioning and maintenance ▪ Diagnostic information and process information in real time

1) Only for HART and Modbus RS485 communication protocols

Operating tools

Operating tools	Operating unit	Interface	Additional information
DeviceCare SFE100	▪ Notebook ▪ PC ▪ Tablet with Microsoft Windows system	▪ CDI service interface ▪ Fieldbus protocol	Innovation brochure IN01047S
FieldCare SFE500	▪ Notebook ▪ PC ▪ Tablet with Microsoft Windows system	▪ CDI service interface ▪ Fieldbus protocol	Operating Instructions BA00027S and BA00059S
SmartBlue app	▪ Devices with iOS: iOS9.0 or higher ▪ Devices with Android: Android 4.4 KitKat or higher	Bluetooth	Endress+HauserSmartBlue App: ▪ Google Playstore (Android) ▪ iTunes Apple Shop (iOS devices)
Device Xpert	Field Xpert SFX 100/350/370	HART fieldbus protocol	Operating Instructions BA01202S

Certificates and approvals

Ex approval 104
Non-Ex approval 104
Pressure Equipment Directive 104
HART certification 104
Radio approval 104
Additional approvals 104
Additional certification 104
External standards and guidelines 105

Ex approval

- ATEX
- IECEx
- cCSAus
- EAC
- INMETRO
- JPN
- KCs
- NEPSI
- UKEX

Non-Ex approval

- cCSAus
- EAC
- UKCA

Pressure Equipment Directive

- CRN
- PED Cat. II/III
- PESR Cat. II/III

HART certification

The device is certified and registered by the FieldComm Group. The measuring system meets all the requirements of the following specifications:

- Certified according to HART 7
- The device can also be operated with certified devices of other manufacturers (interoperability).

Radio approval

The device has radio approvals.

Additional approvals

- Food Contact Materials Regulation (EC) 1935/2004
  A declaration for a specific serial number that confirms compliance with the requirements of (EC) 1935/2004 is only generated for measuring instruments with the order code for "Test, certificate", option J1 "EU Food Contact Materials (EC) 1935/2004.
- FDA
  A declaration for a specific serial number that confirms compliance with FDA requirements is only generated for measuring instruments with the order code for "Test, certificate", option J2 "US Food Contact Materials FDA CFR 21".
- USP Class VI
- TSE/BSE Certificate of Suitability
- VDS (for stationary fire extinguishing systems)

Additional certification

- IO-Link
  Self-certification with Manufacturer Declaration
- CRN approval
  Some device versions have a CRN approval. A CRN-approved process connection with a CSA approval must be ordered for a CRN-approved device.
- EN10204-3.1 material certificate, wetted parts and sensor housing (order code for "Test, certificate", option JA)
- Pressure test, internal process, test report (order code for "Test, certificate", option JB)
- Surface roughness test ISO4287/Ra, (wetted parts), test report (option JE)
- Compliance with requirements derived from cGMP, Declaration (option JG)

External standards and guidelines

- IEC/EN 60529
  Degrees of protection provided by enclosure (IP code)
- IEC/EN 60068-2-6
  Environmental influences: Test procedure - Test Fc: vibration (sinusoidal)
- IEC/EN 60068-2-31
  Environmental influences: Test procedure - Test Ec: shocks due to rough handling, primarily for devices.
- IEC/EN 61010-1
  Safety requirements for electrical equipment for measurement, control and laboratory use - general requirements.
- GB 30439.5
  Safety requirements for industrial automation products - Part 5: Flowmeter safety requirements
- CAN/CSA-C22.2 No. 61010-1-12
  Safety Requirements for Electrical Equipment for Measurement, Control and Laboratory Use - Part 1 General Requirements.
- IEC 61131-9
  Interface for communication with small sensors and actuators via a point-to -point connection
- IEC/EN 61326
  Emission in accordance with Class A requirements; Electromagnetic compatibility (EMC requirements)
- ANSI/ISA-61010-1 (82.02.01)
  Safety Requirements for Electrical Equipment for Measurement, Control and Laboratory Use - Part 1 General Requirements.
- NAMUR NE 21
  Electromagnetic compatibility (EMC) of industrial process and laboratory control equipment.
- NAMUR NE 32
  Data retention in the event of a power failure in field and control instruments with microprocessors.
- NAMUR NE 43
  Standardization of the signal level for the breakdown information of digital transmitters with analog output signal.
- NAMUR NE 53
  Software of field devices and signal-processing devices with digital electronics.
- NAMUR NE 105
  Specifications for integrating fieldbus devices in engineering tools for field devices.
- NAMUR NE 107
  Self-monitoring and diagnosis of field devices.
- NAMUR NE 131
  Requirements for field devices for standard applications.
- ETSI EN 300 328
  Guidelines for 2.4 GHz radio components
- EN 301489
  Electromagnetic compatibility and radio spectrum matters (ERM).

Application packages

Use 108
Heartbeat Verification + Monitoring 108

Use

Many different application packages are available to enhance the functionality of the device. Such packages might be needed to address safety aspects or specific application requirements.

The application packages can be ordered with the device or subsequently from Endress+Hauser. Detailed information on the relevant order code is available from your local Endress+Hauser sales organization or on the product page of the Endress+Hauser website: www.endress.com.

Heartbeat Verification + Monitoring

Heartbeat Verification

Availability depends on the product structure.

Meets the requirement for traceable verification according to DIN ISO 9001:2015 Clause 7.6 a) "Control of monitoring and measuring equipment":
- Functional testing in the installed state without interrupting the process.
- Traceable verification results on request, including report.
- Simple testing process with local operation or other operating interfaces.
- Clear measuring point assessment (pass/fail) with high total test coverage within the framework of manufacturer specifications.
- Extension of calibration intervals according to operator's risk evaluation.

Heartbeat Monitoring

Availability depends on the product structure.

Heartbeat Monitoring continuously provides data characteristic of the measuring principle to an external condition monitoring system, facilitating preventive maintenance or process analysis. This data enables the operator to:
- Draw conclusions - using this data and other information - about the measuring performance over time.
- Schedule servicing in time.
- Monitor the process quality or product quality .

Accessories

Device-specific accessories 110
Communication-specific accessories 111
Service-specific accessory 112
System components 112

Device-specific accessories

Transmitter

Accessories	Description	Order number
Proline 10 transmitter	Installation Instructions EA01350D	5XBBXX-*...*
Weather protection cover	Protects the device from weather exposure: Installation Instructions EA01351D	71502730
Connecting cable	Can be ordered with the device. The following cable lengths are available: order code for "Cable, sensor connection" ▪ 5 m (16 ft) ▪ 10 m (32 ft) ▪ 20 m (65 ft) ▪ User-configurable cable length m (ft) Max. cable length: 200 m (660 ft)	DK5013-*...*
Ground cable	1 ground cable set for potential equalization, consisting of 2 ground cables	

Sensor

Accessories	Description
Ground disks	Ground medium in lined measuring pipes. Installation Instructions EA00070D

Communication-specific accessories

Accessory	Description
Commubox FXA195 USB/HART modem	Intrinsically safe HART communication with FieldCare and FieldXpert Technical Information TI00404F
Commubox FXA291	Connects the Endress+Hauser devices with the CDI interface (= Endress+Hauser Common Data Interface) to the USB interface of a personal computer or laptop. Technical Information TI405C/07
Commubox FXA291	Connects the Endress+Hauser devices with the CDI interface (= Endress+Hauser Common Data Interface) to the USB interface of a personal computer or laptop. Technical Information TI405C/07
HART loop converter HMX50	Is used to evaluate and convert dynamic HART process variables to analog current signals or limit values. ▪ Technical Information TI00429F ▪ Operating Instructions BA00371F
Fieldgate FXA42	Transmission of measured values from connected 4 to 20 mA analog and digital devices. ▪ Technical Information TI01297S ▪ Operating Instructions BA01778S ▪ Product page: www.endress.com/fxa42
Field Xpert SMT50	The Field Xpert SMT50 table PC for device configuration enables mobile plant asset management. It is suitable for commissioning and maintenance staff to manage field instruments with a digital communication interface and to record progress. This tablet PC is designed as an all-in-one solution with a preinstalled driver library and is an easy-to-use, touch-sensitive tool which can be used to manage field instruments throughout their entire life cycle. ▪ Technical Information TI01555S ▪ Operating Instructions BA02053S ▪ Product page: www.endress.com/smt50
Field Xpert SMT70	Tablet PC for the configuration of the device. Enables mobile Plant Asset Management to manage the devices with a digital communication interface. Suitable for Zone 2. ▪ Technical Information TI01342S ▪ Operating Instructions BA01709S ▪ Product page: www.endress.com/smt70
Field Xpert SMT77	Tablet PC for the configuration of the device. Enables mobile Plant Asset Management to manage the devices with a digital communication interface. Suitable for Zone 1. ▪ Technical Information TI01418S ▪ Operating Instructions BA01923S ▪ Product page: www.endress.com/smt77
FieldPort SFP20	The FieldPort SFP20 is a USB interface for the configuration of Endress+Hauser IO-Link devices, and also of devices from other vendors. Combined with the IO-Link CommDTM (DeviceCare, FieldCare, Field Xpert) and the IODD Interpreter, the FieldPort complies with the FDT/DTM standards.
IO-Link master BL20	IO-Link master from Turck for DIN rails supports PROFINET, EtherNet/IP and Modbus TCP. With web server for easy configuration.

Service-specific accessory

Accessory	Description	Order code
Applicator	Software for selecting and sizing Endress+Hauser devices.	https://portal.endress.com/webapp/applicator
Netilion	IIoT ecosystem: Unlock knowledge With the Netilion IIoT ecosystem, Endress+Hauser allows you to optimize your plant performance, digitize workflows, share knowledge, and enhance collaboration. Based on decades of experience in process automation, Endress+Hauser offers the process industry an IIoT ecosystem that enables you to gain useful insights from data. These insights can be used to optimize processes, leading to increased plant availability, efficiency, and reliability - ultimately resulting in a more profitable plant.	www.netilion.endress.com
FieldCare	FDT-based plant asset management software from Endress+Hauser. Management and configuration of Endress+Hauser devices. Operating Instructions BA00027S and BA00059S	▪ Device driver: www.endress.com → Download Area ▪ CD-ROM (contact Endress+Hauser) ▪ DVD (contact Endress+Hauser)
DeviceCare	Software for connecting and configuring Endress+Hauser devices. ▪ Technical Information: TI01134S ▪ Innovation brochure: IN01047S	▪ Device driver: www.endress.com → Download Area ▪ CD-ROM (contact Endress+Hauser) ▪ DVD (contact Endress+Hauser)

System components

Accessories	Description
Memograph M	Graphic data manager: ▪ Record measured values ▪ Monitor limit values ▪ Analyze measuring points ▪ Technical Information TI00133R ▪ Operating Instructions BA00247R
iTEMP	Temperature transmitter: ▪ Measure the absolute pressure and gauge pressure of gases, vapors and liquids ▪ Read the medium temperature "Fields of Activity" document FA00006T



www.addresses.endress.com

Endress+Hauser

People for Process Automation