TI01266F/00/EN/09.22-00
71598313
2022-12-13

Technical Information
Micropilot FMR10

Free space radar



Level measurement in liquids

Application

- Ingress protection: IP66/68 / NEMA 4X/6P
- Measuring range: up to 12 m (39.37 ft)
- Process temperature: –40 to 60 °C (–40 to 140 °F)
- Process pressure: –1 to 3 bar (–14 to 43 psi)
- Accuracy: up to ± 5 mm (0.2 in)

Your benefits

- Level measurement for liquids in storage tanks, open basins, pump shafts and canal systems
- Radar measuring device with *Bluetooth*® wireless technology
- Simple, safe and secure wireless remote access – ideal for installation in places difficult to reach
- Commissioning, operation and maintenance via free iOS / Android app SmartBlue – saves time and reduces costs
- Full PVDF body - for a long sensor lifetime
- Hermetically sealed wiring and fully potted electronics – eliminates water ingress and allows operation under harsh environmental conditions
- Most compact radar due to unique radar chip design – fits in limited space installations
- Best price-performance-ratio radar

Endress+Hauser
People for Process Automation

Table of contents

About this document 3
Symbols 3
Terms and abbreviations 3

Function and system design 4
Measuring principle 4
Input 4
Output 4

Input 5
Measured variable 5
Measuring range 5
Operating frequency 5
Transmission power 5

Output 5
Output signal 5
Digital output 5
Signal on alarm 6
Linearization 6

Power supply 7
Cable assignment 7
Supply voltage 7
Power consumption 7
Current consumption 7
Starting time 7
Power supply failure 8
Connecting the device 8
Cable specification 8
Overvoltage protection 8

Performance characteristics 8
Reference operating conditions 8
Maximum measured error 8
Measured value resolution 9
Response time 9
Influence of ambient temperature 9

Mounting 10
Installation conditions 10

Environment 16
Ambient temperature range 16
Storage temperature 16
Climate class 16
Operating altitude as per IEC 61010-1 Ed.3 16
Degree of protection 16
Vibration resistance 16
Electromagnetic compatibility (EMC) 16

Process 17
Process temperature, process pressure 17
Dielectric constant 17

Mechanical construction 17
Dimensions 17
Weight 18
Materials 19
Connecting cable 19

Operability 19
Operating concept 19
Operation via Bluetooth® wireless technology 19

Certificates and approvals 20
CE mark 20
RoHS 20
EAC conformity 20
RCM marking 20
Approvals 20
Pressure equipment with allowable pressure ≤ 200 bar (2 900 psi) 20
EN 302729-1/2 radio standard 20
FCC / Industry Canada 21
Japanese Radio Law and Japanese Telecommunications Business Law Compliance 22
Mexico 22
Other standards and guidelines 23

Ordering information 23

Accessories 24
Device-specific accessories 24
FAX50 screw-in flange 27
Angle bracket for wall mounting 28
Cantilever with pivot 29
Ceiling mounting bracket 34
Pivotable mounting bracket for installation in manhole over sewer channel 35
Horizontal mounting bracket for installation in confined spaces in sewer shaft 36
Service-specific accessories 37

Documentation 37

Registered trademarks 37

About this document

Symbols

Symbols for certain types of information and graphics

Permitted
Procedures, processes or actions that are permitted

Forbidden
Procedures, processes or actions that are forbidden

Tip
Indicates additional information

Reference to documentation

Reference to graphic

▶
Notice or individual step to be observed

1., 2., 3.
Series of steps

Result of a step

1, 2, 3, ...
Item numbers

A, B, C, ...
Views

Terms and abbreviations

BA
Document type "Operating Instructions"

KA
Document type "Brief Operating Instructions"

TI
Document type "Technical Information"

XA
Document type "Safety Instructions"

PN
Nominal pressure

MWP
Maximum working pressure
The MWP is indicated on the nameplate.

ToF
Time of Flight

ε_r (Dk value)
Relative dielectric constant

Operating tool

The term "operating tool" is used in place of the following operating software:
SmartBlue (app), for operation using an Android or iOS smartphone or tablet

BD
Blocking Distance; no signals are analyzed within the BD.

PLC
Programmable logic controller (PLC)

Function and system design

Measuring principle

The Micropilot is a "downward-looking" measuring system, which functions according to the time-of-flight (ToF) method. It measures the distance from the reference point **R** to the product surface. Radar pulses are emitted by an antenna, reflected off the product surface and received again by the radar system.

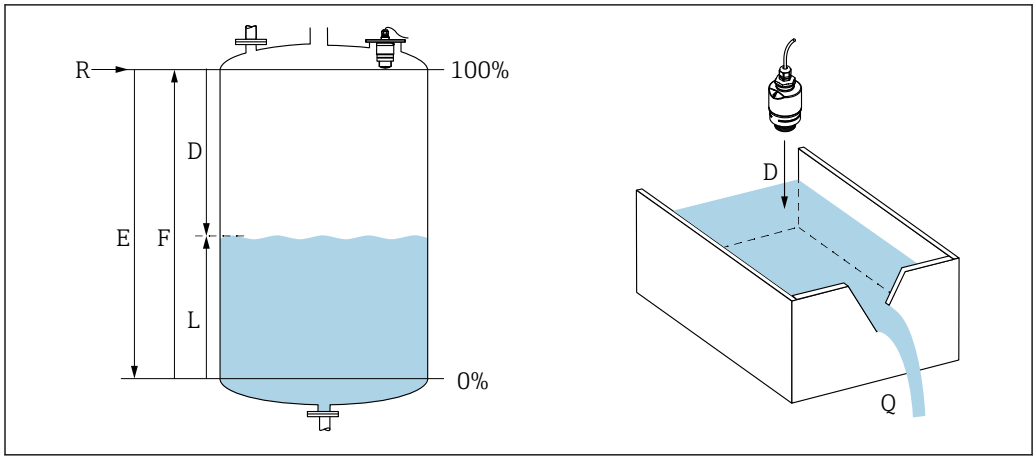

1 *Level / flow calibration parameter*

E *Empty calibration (= zero)*
F *Full calibration (= span)*
D *Measured distance*
L *Level (L = E - D)*
Q *Flow rate at measuring weirs or channels (calculated from the level using linearization)*
R *Reference point*

Input

The reflected radar pulses are received by the antenna and transmitted to the electronics. A microprocessor evaluates the signals and identifies the level echo caused by the reflection of the radar pulses at the product surface. This clear signal detection system benefits from over 30 years' experience with time-of-flight procedures.

The distance **D** to the product surface is proportional to the time of flight **t** of the pulse:

$D = c \cdot t/2$,

where **c** is the speed of light.

Based on the known empty distance **E**, the level **L** is calculated:

$L = E - D$

Output

The Micropilot is calibrated by entering the empty distance **E** (= zero point) and the full distance **F** (= span).

- Current output: 4 to 20 mA
- Digital output (SmartBlue): 0 to 8 m (0 to 26.25 ft) [1] or 0 to 12 m (0 to 39.37 ft) [2] installed in combination with "flooding protection tube" accessory.

1) order code 010 (approval) "GR": 0 to 5 m (0 to 16.4 ft)
2) order code 010 (approval) "GR": 0 to 8 m (0 to 26.2 ft)

Input

Measured variable

The measured variable is the distance between the reference point and the product surface.

The level is calculated based on **E**, the empty distance entered.

Measuring range

Maximum measuring range

- Device with 40 mm (1.5 in) antenna: 8 m (26.25 ft) [3]
- Device installed with 40 mm (1.5 in) antenna and "flooding protection tube" accessory: 12 m (39.37 ft) [4]

Installation requirements

- recommended tank height > 1.5 m (5 ft)
- Open channel minimum width 0.5 m (1.6 ft)
- Calm surfaces
- No agitators
- No buildup
- Relative dielectric constant $\varepsilon_r > 4$
  Contact Endress+Hauser for lower ε_r values

Usable measuring range

The usable measuring range depends on the antenna size, the medium's reflective properties, the installation position and any possible interference reflections.

Media groups

- $\varepsilon_r = 4$ to 10
  e.g. concentrated acid, organic solvents, ester, aniline, acetone, etc.
- $\varepsilon_r > 10$
  e.g. conductive liquids, aqueous solutions, diluted acids, bases and alcohol

Reduction of the maximum possible measuring range by:

- Media with bad reflective properties (= low ε_r value)
- Formation of buildup, particularly of moist products
- Strong condensation
- Foam generation
- Freezing of sensor

Operating frequency

K-band (~ 26 GHz)

Transmission power

Mean power density in the direction of the beam

- At a distance of 1 m (3.3 ft): < 12 nW/cm²
- At a distance of 5 m (16 ft): < 0.4 nW/cm²

Output

Output signal

4 to 20 mA

An 4 to 20 mA interface is used for measured value output and to power to the device.

Digital output

Bluetooth® wireless technology

The device has a *Bluetooth*® wireless technology interface and can be operated and configured via this interface using the SmartBlue app.

- The range under reference conditions is 25 m (82 ft)
- Incorrect operation by unauthorized persons is prevented by means of encrypted communication and password encryption
- The *Bluetooth*® wireless technology interface can be deactivated

3) order code 010 (approval) "GR": 5 m (16.4 ft)
4) order code 010 (approval) "GR": 8 m (26.2 ft)

Signal on alarm

Depending on the interface, failure information is displayed as follows:
- Current output
  Alarm current: 22.5 mA (in accordance with NAMUR recommendation NE 43)
- SmartBlue (app)
  - Status signal (as per NAMUR Recommendation NE 107)
  - Plain text display with remedial action

Linearization

The linearization function of the device allows the conversion of the measured value into any unit of length, weight, flow or volume.

When operating via SmartBlue (app), up to 32 value pairs can be entered manually into the linearization table.

Power supply

Cable assignment

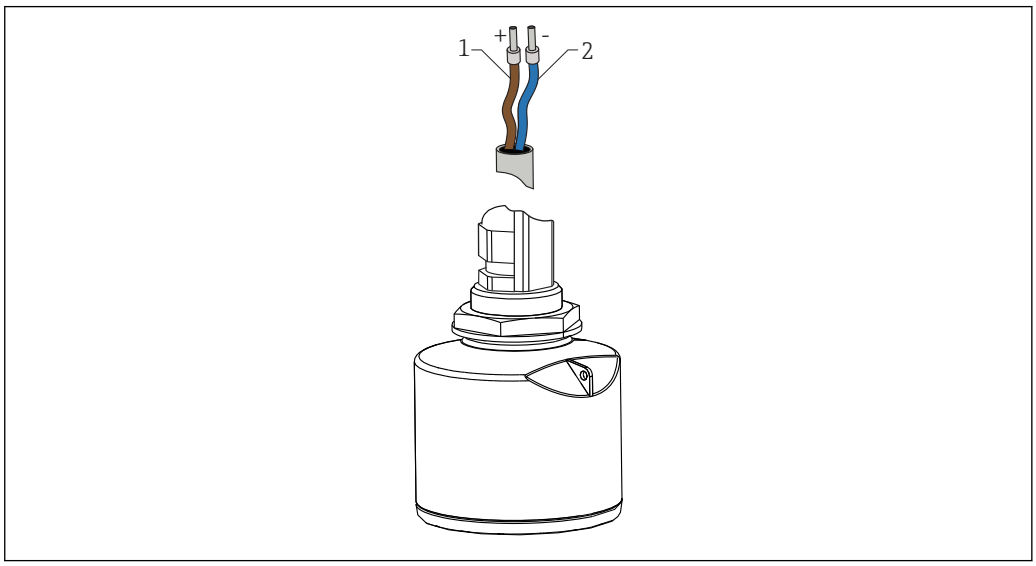

2 *Cable assignment*

1 Plus, brown wire
2 Minus, blue wire

Supply voltage

10.5 to 30 V_{DC}

An external power supply is necessary.

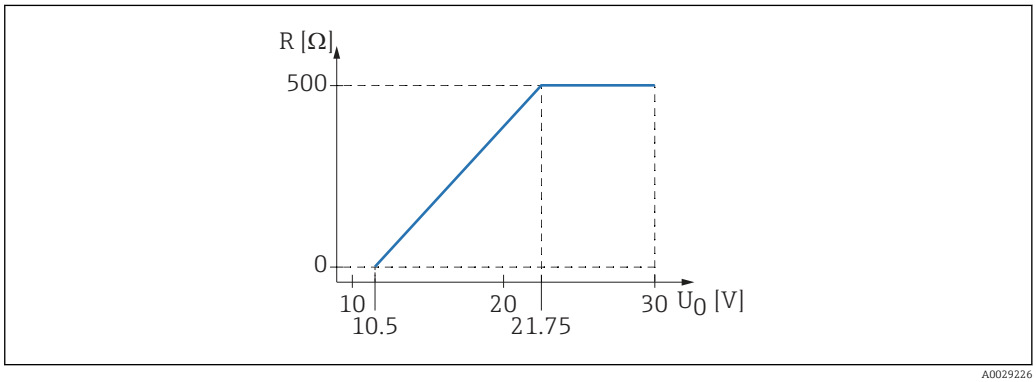

3 *Maximum load R, depending on supply voltage U_0 of power supply unit*

Battery operation
The sensor's *Bluetooth*® wireless technology communication can be disabled to increase the operating life of the battery.

Potential equalization
No special measures for potential equalization are required.

Various power supply units can be ordered as an accessory from Endress+Hauser.

Power consumption

Maximum input power: 675 mW

Current consumption

- Maximum input current: <25 mA
- Maximum start-up current: 3.6 mA

Starting time

First stable measured value after 20 s (with supply voltage = 24 V_{DC})

Power supply failure

The configuration remains stored in the sensor.

Connecting the device

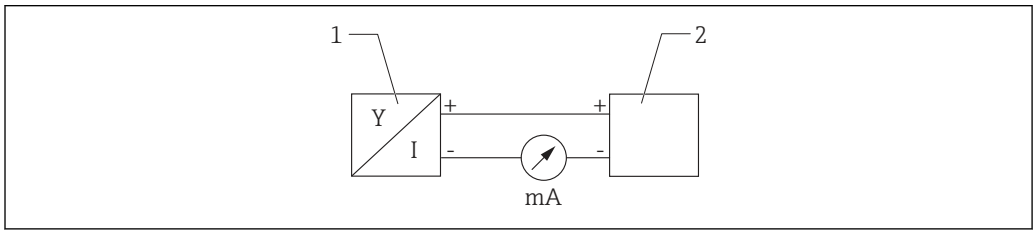

4 FMR10 block diagram

1 Micropilot FMR10, 4 to 20 mA
2 Power supply

Cable specification

Unshielded cable, wire cross-section 0.75 mm^2
- Resistant to UV and weather conditions as per ISO 4892-2
- Flame resistance according to IEC 60332-1-2

As per IEC/EN 60079-11 section 10.9, the cable is designed for a tensile strength of 30 N (6.74 lbf) (over a period of 1 h).

The device is supplied with 10 m (33 ft) cable length as standard.

Overvoltage protection

The device is equipped with integrated overvoltage protection.

Performance characteristics

Reference operating conditions

- Temperature = +24 °C (+75 °F) ±5 °C (±9 °F)
- Pressure = 960 mbar abs. (14 psia) ±100 mbar (±1.45 psi)
- Humidity = 60 % ±15 %
- Reflector: metal plate with diameter ≥ 1 m (40 in)
- No major interference reflections inside the signal beam

Maximum measured error

Typical data under reference operating conditions: DIN EN 61298-2, percentage values in relation to the span.

Output, digital
(SmartBlue (app))
- Sum of non-linearity, non-repeatability and hysteresis: ±5 mm (±0.2 in)
- Offset/zero point: ±4 mm (±0.16 in)

Output, analog
Only relevant for 4-20mA current output; add error of the analog value to the digital value
- Sum of non-linearity, non-repeatability and hysteresis: ±0.02 %
- Offset/zero point: ±0.03 %

Differing values in near-range applications

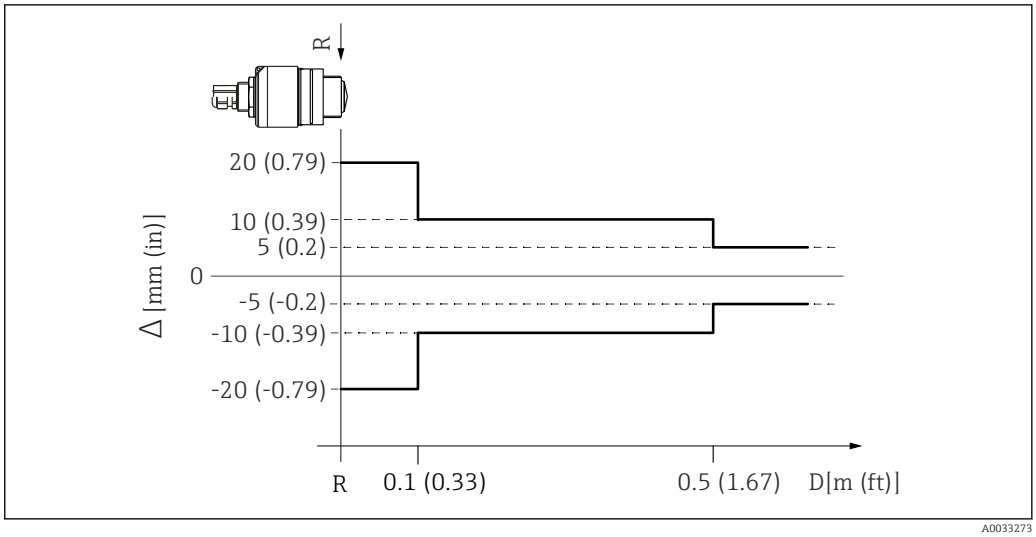

5 Maximum measured error in near-range applications

Δ Maximum measured error
R Reference point of the distance measurement
D Distance from reference point of antenna

Measured value resolution

Dead band as per EN61298-2:
- Digital: 1 mm (0.04 in)
- Analog: 4 µA

Response time

The response time can be configured. The following step response times apply (in accordance with DIN EN 61298-2) when damping is switched off:

Tank height
<5 m (16 ft)

Sampling rate
1 s^{-1}

Response time
<3 s

In accordance with DIN EN 61298-2, the step response time is the time following an abrupt change in the input signal up until the changed output signal has adopted 90% of the steady-state value for the first time.

Influence of ambient temperature

The measurements are carried out in accordance with EN 61298-3.
- Digital (*Bluetooth*® wireless technology):
  Standard version: average T_C = ±3 mm (±0.12 in)/10 K
- Analog (current output):
  - Zero point (4 mA): average T_K = 0.02 %/10 K
  - Span (20 mA): average T_K = 0.05 %/10 K

Mounting

Installation conditions

Installation types

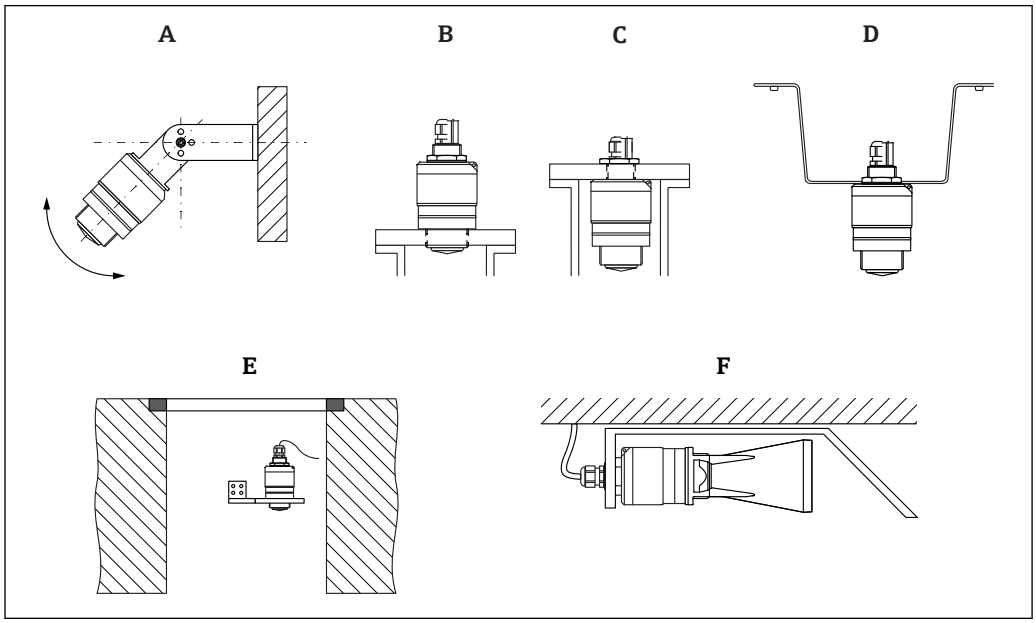

6 *Wall, ceiling or nozzle installation*

A Wall or ceiling mount, adjustable
B Mounted at front thread
C Mounted at rear thread
D Ceiling installation with counter nut (included in delivery)
E Pivotable mounting bracket for installation in a manhole over a sewer channel, 40 mm (1.5 in) antenna with flooding protection tube (accessory) recommended
F Horizontal mounting bracket for installation in confined spaces in sewer shaft

Caution!
- The sensor cables are not designed as supporting cables. Do not use them for suspension purposes.
- Always operate the device in a vertical position in free-space applications.

Nozzle mounting

The antenna should project out of the nozzle for optimum measurement. The interior of the nozzle must be smooth and may not contain any edges or welded joints. The edge of the nozzle should be rounded if possible.

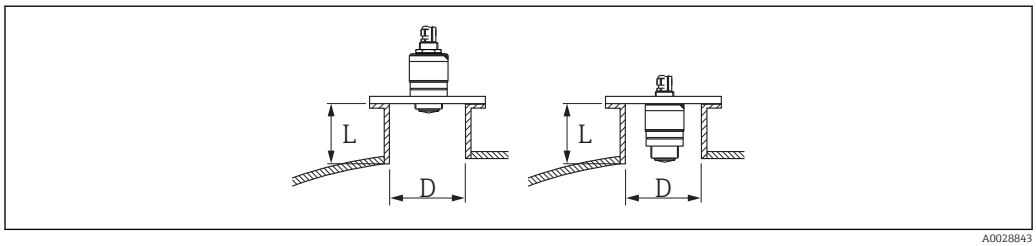

7 *Nozzle mounting*

L Nozzle length
D Nozzle diameter

The maximum length of the nozzle **L** depends on the nozzle diameter **D**.

Please note the limits for the diameter and length of the nozzle.

Mounting outside the nozzle
- D: min. 40 mm (1.5 in)
- L: max. D × 1.5

Mounting inside the nozzle
- D: min. 80 mm (3 in)
- L: max. 140 mm (5.5 in) + D × 1.5

Position for installation on a vessel

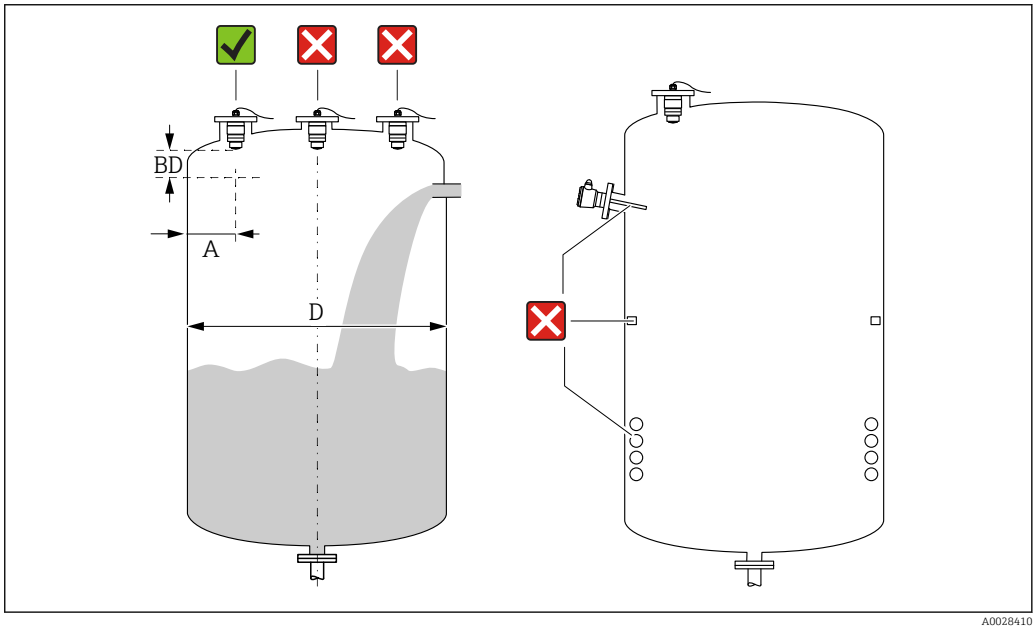

8 *Installation position on a vessel*

- If possible install the sensor so that its lower edge projects into the vessel.
- Recommended distance **A** wall - nozzle outer edge: ~ ⅙ of the vessel diameter **D**. Under no circumstances should the device be mounted closer than 15 cm (5.91 in) to the vessel wall.
- Do not install the sensor in the middle of the vessel.
- Avoid measurements through the filling curtain.
- Avoid equipment such as limit switches, temperature sensors, baffles, heating coils etc.
- No signals are evaluated within the Blocking distance (BD). It can therefore be used to suppress interference signals (e.g. the effects of condensate) in the vicinity of the antenna.
  An automatic Blocking distance of at least 0.1 m (0.33 ft) is configured as standard. However, this can be overwritten manually (0 m (0 ft) is also permitted).
  Automatic calculation:
  Blocking distance = Empty calibration - Full calibration - 0.2 m (0.656 ft).
  Each time a new entry is made in the **Empty calibration** parameter or **Full calibration** parameter, the **Blocking distance** parameter is recalculated automatically using this formula.
  If the result of the calculation is a value < 0.1 m (0.33 ft), the Blocking distance of 0.1 m (0.33 ft) will continue to be used.

Device alignment for installation on a vessel
- Align the antenna vertically to the product surface.
- Align the eyelet with lug towards the vessel wall as well as possible.

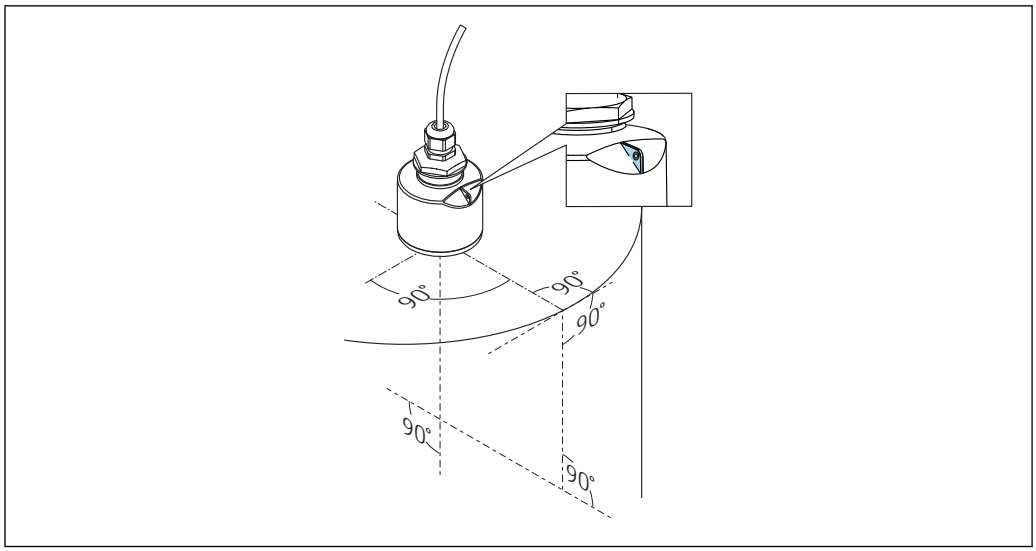

A0028927

9 Device alignment for installation on a vessel

Beam angle

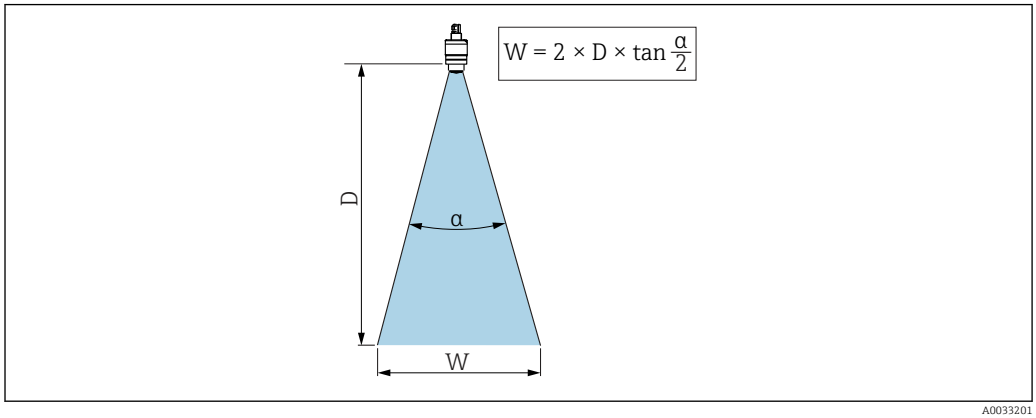

A0033201

10 Relationship between beam angle α, distance D and beamwidth diameter W

The beam angle is defined as the angle **α** at which the power density of the radar waves reaches half the value of the maximum power density (3 dB width). Microwaves are also emitted outside the signal beam and can be reflected off interfering installations.

Beam diameter **W** as a function of beam angle **α** and distance **D**.

40 mm (1.5 in) antenna, α 30 °
W = D × 0.54

40 mm (1.5 in) antenna with flooding protection tube, α 12 °
W = D × 0.21

Measurement in plastic vessels

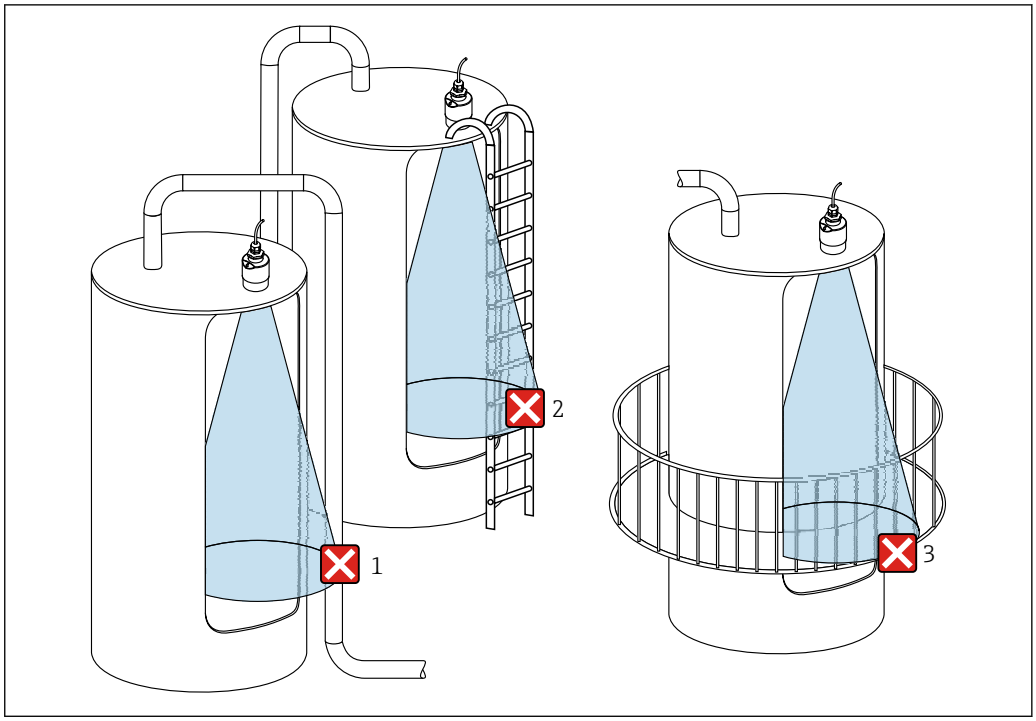

11 *Measurement in a plastic vessel with a metallic, interfering installation outside of the vessel*

1 *Pipe, tubing*
2 *Ladder*
3 *Grate, railing*

If the outer wall of the vessel is made of a non-conductive material (e.g. GFR), microwaves can also be reflected by interfering installations outside of the vessel.

Please ensure there are no interfering installations made of a conductive material in the signal beam (see the beam angle section for information on calculating the beamwidth diameter).

Please contact the manufacturer for further information.

Weather protection cover

For outdoor use, a weather protection cover is recommended.

The weather protection cover is available as an accessory.

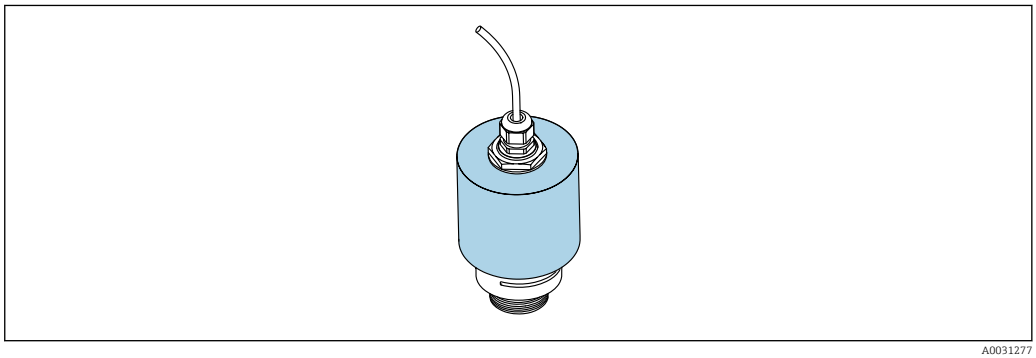

12 *Weather protection cover with 40 mm (1.5 in) antenna*

The sensor is not completely covered by the protection cover.

Use of flooding protection tube

The flooding protection tube ensures the sensor measures the maximum level even if it is completely flooded.

In free-field installations and/or in applications where there is a risk of flooding, the flooding protection tube must be used.

The flooding protection tube can be ordered as an accessory or together with the device via the product structure "Accessory enclosed".

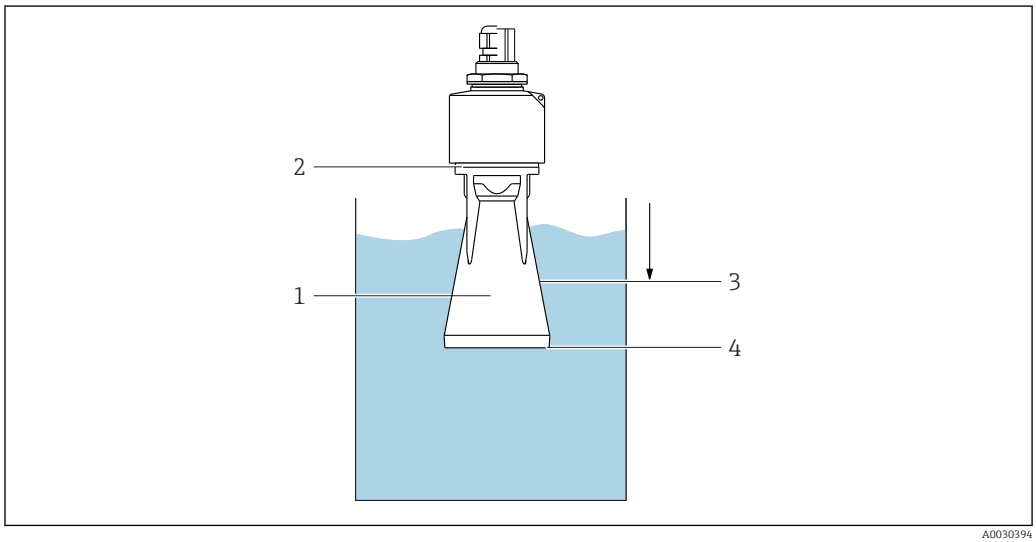

13 Function of flooding protection tube

1 Air pocket
2 O-ring (EPDM) seal
3 Blocking distance
4 Max. level

The tube is screwed directly onto the sensor and seals off the system by means of an O-ring making it air-tight. In the event of flooding, the air pocket that forms in the tube ensures the measurement of the maximum level at the end of the tube. Due to the fact that the Blocking distance is inside the tube, multiple echoes are not analyzed.

Installation with mounting bracket, adjustable

The mounting bracket is available as an accessory.

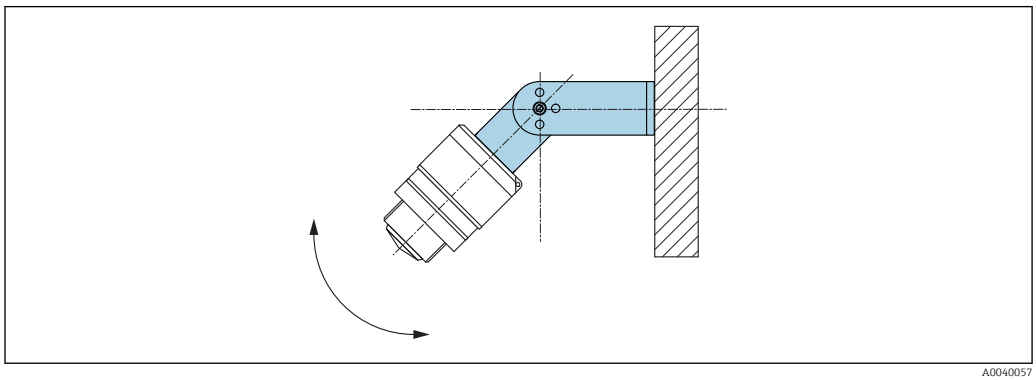

14 Installation with mounting bracket, adjustable

- Wall or ceiling installation is possible.
- Using the mounting bracket, position the antenna so that it is perpendicular to the product surface.

NOTICE

There is no conductive connection between the mounting bracket and transmitter housing.
Electrostatic charging possible.
► Integrate the mounting bracket in the local potential equalization system.

Cantilever installation, with pivot

The cantilever, wall bracket and mounting frame are available as accessories.

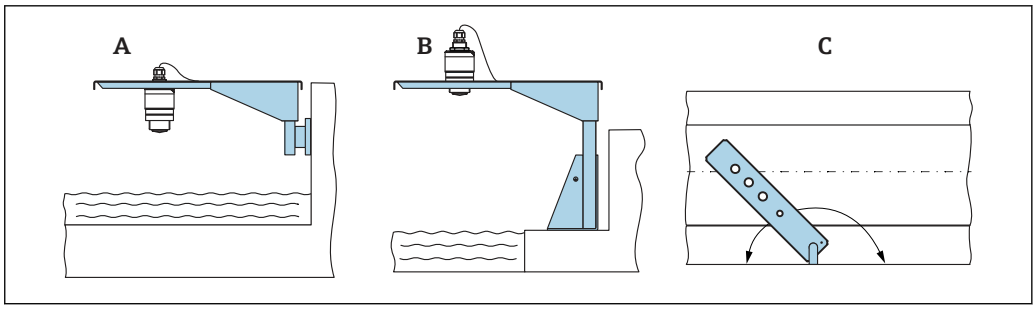

15 *Cantilever installation, with pivot*

A Cantilever with wall bracket
B Cantilever with mounting frame
C Cantilever can be turned (e.g., in order to position the device over the center of the flume)

Installation of horizontal mounting bracket for sewer shafts

The horizontal mounting bracket for sewer shafts is available as an accessory.

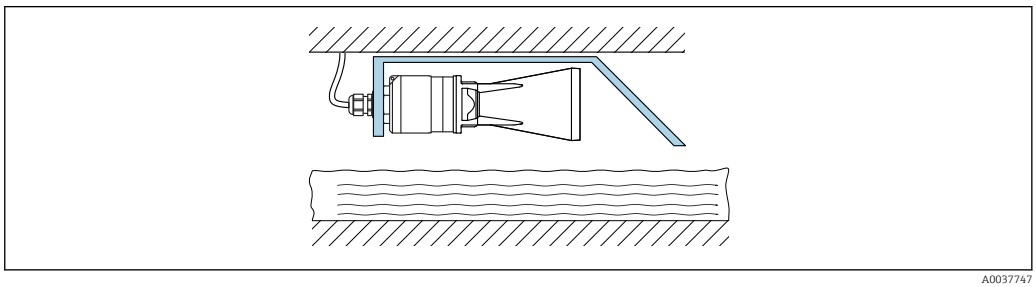

16 *Horizontal installation, mounting bracket, wastewater shaft, 40 mm (1.5 in) antenna with flooding protection tube (accessory) recommended*

Mounting in a shaft

The pivoted mounting bracket is available as an accessory.

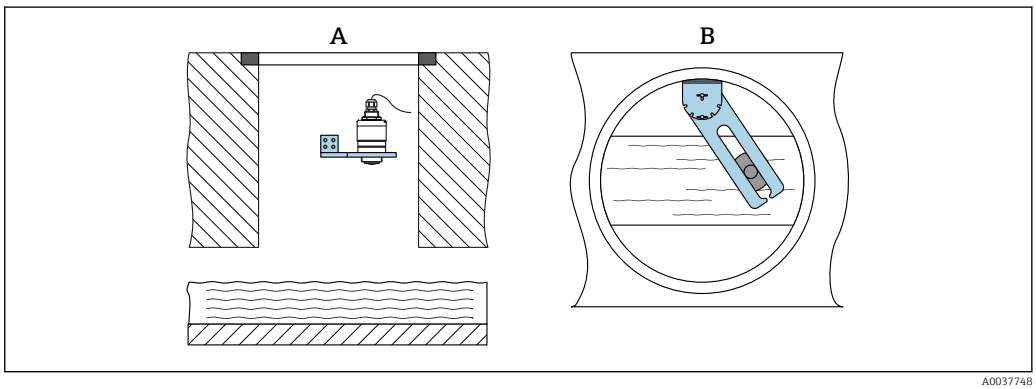

17 *Mounting in a shaft, pivotable and adjustable*

A Cantilever with wall bracket
B Pivotable and adjustable arm (e.g. to align the device with the center of a channel)

Environment

Ambient temperature range	Measuring device: −40 to +60 °C (−40 to +140 °F) For outdoor operation in strong sunlight: ▪ Mount the device in the shade. ▪ Avoid direct sunlight, particularly in warm climatic regions. ▪ Use a weather protection cover.
Storage temperature	−40 to +80 °C (−40 to +176 °F)
Climate class	DIN EN 60068-2-38 (test Z/AD)
Operating altitude as per IEC 61010-1 Ed.3	Generally up to 2 000 m (6 600 ft) above sea level.
Degree of protection	Tested acc. to: ▪ IP66, NEMA 4X ▪ IP68, NEMA 6P (24 h at 1.83 m (6.00 ft) 1.83 m under water)
Vibration resistance	DIN EN 60068-2-64/IEC 60068-2-64: 20 to 2 000 Hz, 1 $(m/s^2)^2/Hz$
Electromagnetic compatibility (EMC)	Electromagnetic compatibility in accordance with all of the relevant requirements outlined in the EN 61000 series and NAMUR Recommendation EMC (NE 21). Details are provided in the Declaration of Conformity (www.endress.com/downloads).

Process

Process temperature, process pressure

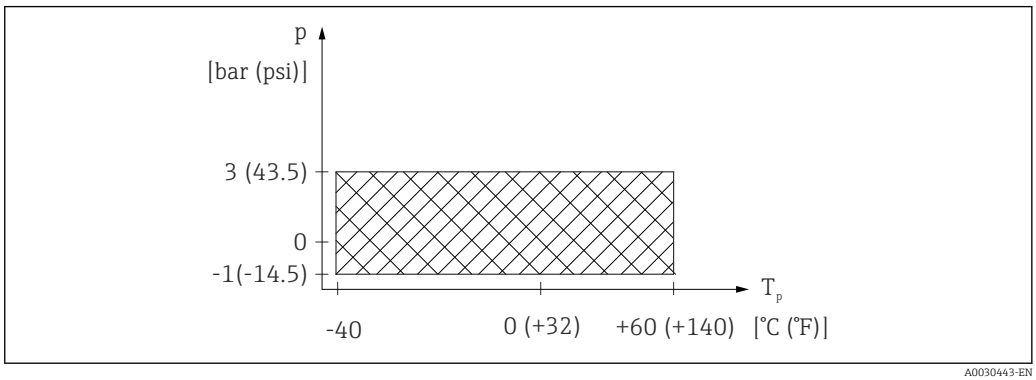

18 *FMR10: Permitted range for process temperature and process pressure*

Process temperature range
−40 to +60 °C (−40 to +140 °F)

Process pressure range
- p_{gauge} = −1 to 3 bar (−14.5 to 43.5 psi)
- p_{abs} < 4 bar (58 psi)

Dielectric constant

For liquids
- $\varepsilon_r \geq 4$
- Contact Endress+Hauser for lower ε_r values

For the dielectric constants (DC values) of many media commonly used in industry, please refer to:
- Dielectric constant (DC value) Compendium CP01076F
- The Endress+Hauser "DC Values app" (available for Android and iOS)

Mechanical construction

Dimensions

40 mm (1.5 in) antenna

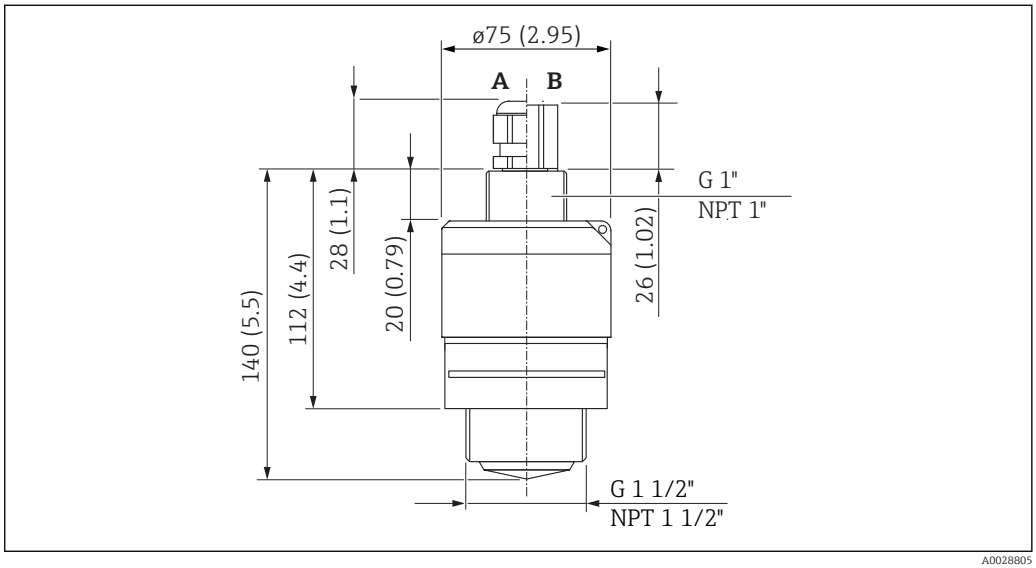

19 *Dimensions of G 1-1/2" or MNPT 1-1/2" process connection thread, engineering unit: mm (in)*

A Cable gland
B FNPT 1/2“ conduit

40 mm (1.5 in) antenna with flooding protection tube

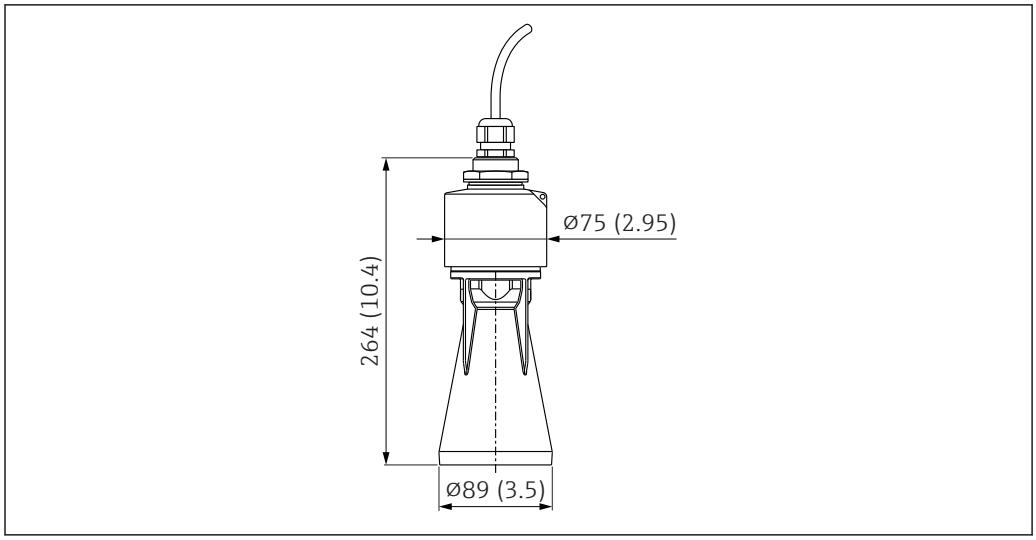

20 Dimensions of 40 mm (1.5 in) antenna mounted with flooding protection tube, engineering unit: mm (in)

The flooding protection tube, metalized PBT-PC, can be ordered together with the device via the product structure "Accessory enclosed".

Counter nut for process connection, rear side

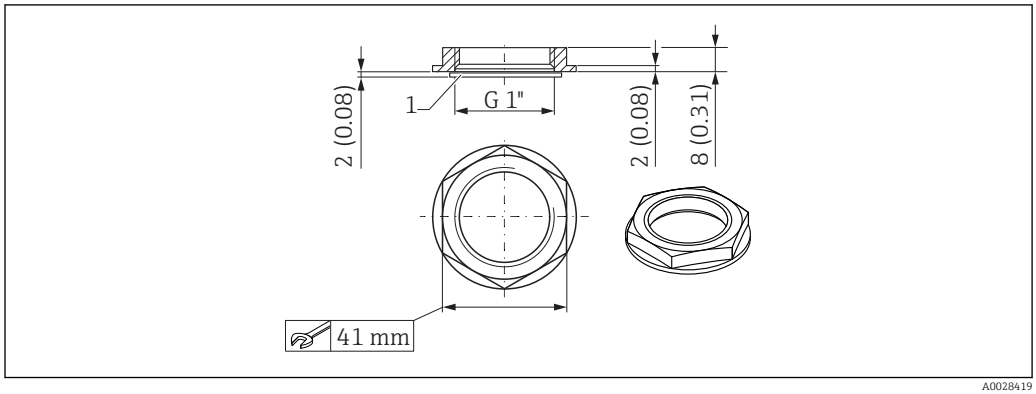

21 Dimensions of counter nut for process connection, rear side, engineering unit: mm (in)

1 Seal

- The counter nut with seal (EPDM) is included in the scope of supply
- Material: PA66

Weight

Weight (including 10 m (32.8 ft) cable): approx. 3.0 kg (6.6 lb)

Materials

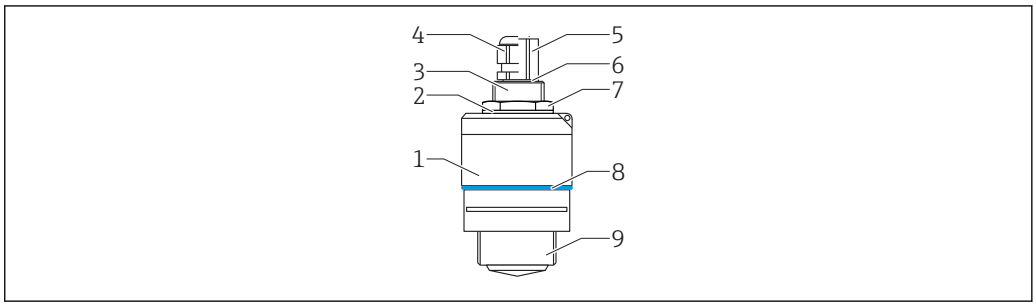

A0028415

22 *Overview of materials*

1 *Sensor housing; PVDF*
2 *Seal; EPDM*
3 *Process connection, rear side; PVDF*
4 *Cable gland; PA*
5 *Conduit adapter; CuZn nickel-plated*
6 *O-ring; EPDM*
7 *Counter nut; PA6.6*
8 *Design ring; PBT-PC*
9 *Process connection, front side; PVDF*

Connecting cable

Standard length: 10 m (33 ft)

If longer cable lengths are required, an extension cable must be used.

In this case, the total cable length (sensor cable + extension cable) must not exceed 300 m (984 ft).

Material : PVC

Operability

Operating concept

- 4 to 20 mA
- SmartBlue (app) via *Bluetooth*® wireless technology

Operation via Bluetooth® wireless technology

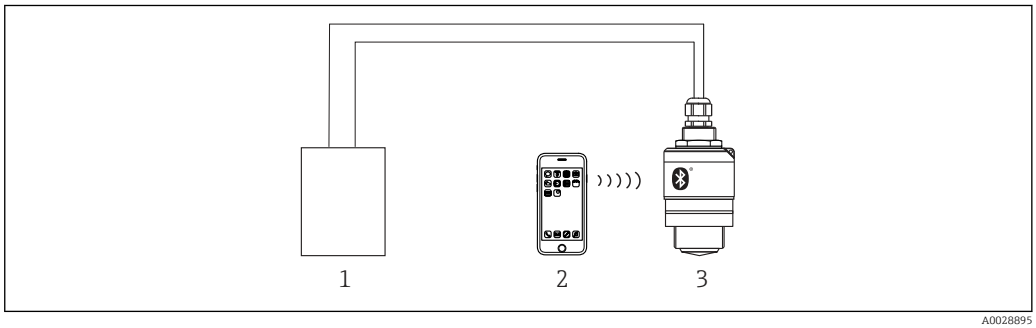

A0028895

23 *Possibilities for remote operation via Bluetooth® wireless technology*

1 *Transmitter power supply unit*
2 *Smartphone/tablet with SmartBlue (app)*
3 *Transmitter with Bluetooth® wireless technology*

Certificates and approvals

The availability of approvals and certificates can be called up daily via the Product Configurator.

CE mark

The measuring system meets the legal requirements of the applicable EU directives. These are listed in the corresponding EU Declaration of Conformity together with the standards applied.

The manufacturer confirms successful testing of the device by affixing to it the CE mark.

RoHS

The measuring system meets the substance restrictions of the Directive on the Restriction of the Use of Certain Hazardous Substances 2011/65/EU (RoHS 2) and the Delegated Directive (EU) 2015/863 (RoHS 3).

EAC conformity

The measuring system meets the legal requirements of the applicable EAC guidelines. These are listed in the corresponding EAC Declaration of Conformity along with the standards applied.

The manufacturer confirms successful testing of the device by affixing to it the EAC mark.

RCM marking

The supplied product or measuring system meets the ACMA (Australian Communications and Media Authority) requirements for network integrity, interoperability, performance characteristics as well as health and safety regulations. Here, especially the regulatory arrangements for electromagnetic compatibility are met. The products bear the RCM marking on the nameplate.

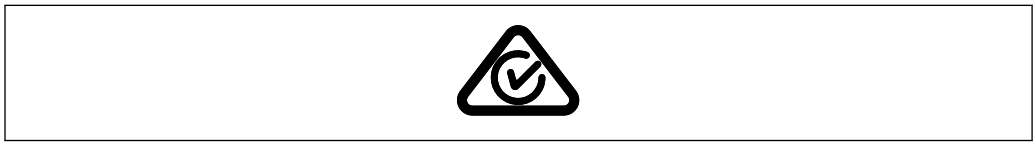

A0029561

Approvals

- Non-hazardous area
- CSA C/US General Purpose
- Non-hazardous area + EAC mark

Pressure equipment with allowable pressure ≤ 200 bar (2 900 psi)

Pressure instruments with a flange and threaded boss that do not have a pressurized housing do not fall within the scope of the Pressure Equipment Directive, irrespective of the maximum allowable pressure.

Reasons:

According to Article 2, point 5 of EU Directive 2014/68/EU, pressure accessories are defined as "devices with an operational function and having pressure-bearing housings".

If a pressure instrument does not have a pressure-bearing housing (no identifiable pressure chamber of its own), there is no pressure accessory present within the meaning of the Directive.

EN 302729-1/2 radio standard

The devices comply with the LPR (Level Probing Radar) radio standard EN 302729-1/2 and are approved for unrestricted use inside and outside of closed vessels in countries of the EU and EFTA. As a prerequisite, the countries in question must have already implemented this standard.

The following countries are those that have currently implemented the standard:

Belgium, Bulgaria, Germany, Denmark, Estonia, France, Greece, UK, Ireland, Iceland, Italy, Liechtenstein, Lithuania, Latvia, Malta, The Netherlands, Norway, Austria, Poland, Portugal, Romania, Sweden, Switzerland, Slovakia, Spain, Czech Republic and Cyprus.

Implementation is still underway in all of the countries not listed.

Please note the following for operation of the devices outside of closed vessels:

1. The device must be mounted in accordance with the instructions in the "Installation" section.
2. Installation must be carried out by properly trained, expert staff.
3. The device antenna must be installed in a fixed location pointing vertically downwards.

4. The installation site must be located at a distance of 4 km from the astronomy stations listed below or otherwise approval must be provided by the relevant authority. If the device is installed at a distance of 4 to 40 km from one of the listed stations, it must not be installed at a height of more than 15 m (49 ft) above the ground.

Astronomy stations

Country	Name of the station	Latitude	Longitude
Germany	Effelsberg	50°31'32" North	06°53'00" East
Finland	Metsähovi	60°13'04" North	24°23'37" East
	Tuorla	60°24'56" North	24°26'31" East
France	Plateau de Bure	44°38'01" North	05°54'26" East
	Floirac	44°50'10" North	00°31'37" West
Great Britain	Cambridge	52°09'59" North	00°02'20" East
	Damhall	53°09'22" North	02°32'03" West
	Jodrell Bank	53°14'10" North	02°18'26" West
	Knockin	52°47'24" North	02°59'45" West
	Pickmere	53°17'18" North	02°26'38" West
Italy	Medicina	44°31'14" North	11°38'49" East
	Noto	36°52'34" North	14°59'21" East
	Sardinia	39°29'50" North	09°14'40" East
Poland	Fort Skala Krakow	50°03'18" North	19°49'36" East
Russia	Dmitrov	56°26'00" North	37°27'00" East
	Kalyazin	57°13'22" North	37°54'01" East
	Pushchino	54°49'00" North	37°40'00" East
	Zelenchukskaya	43°49'53" North	41°35'32" East
Sweden	Onsala	57°23'45" North	11°55'35" East
Switzerland	Bleien	47°20'26" North	08°06'44" East
Spain	Yebes	40°31'27" North	03°05'22" West
	Robledo	40°25'38" North	04°14'57" West
Hungary	Penc	47°47'22" North	19°16'53" East

As a general rule, the requirements outlined in EN 302729-1/2 must be observed.

FCC / Industry Canada

This device complies with Part 15 of the FCC Rules [and with Industry Canada license-exempt RSS standard(s)]. Operation is subject to the following two conditions: (1) this device may not cause harmful interference, and (2) this device must accept any interference received, including interference that may cause undesired operation.

Le présent appareil est conforme aux CNR d'Industrie Canada applicables aux appareils radio exempts de licence. L'exploitation est autorisée aux deux conditions suivantes: (1) l'appareil ne doit pas produire de brouillage, et (2) l'utilisateur de l'appareil doit accepter tout brouillage radioélectrique subi, même si le brouillage est susceptible d'en compromettre le fonctionnement.

[Any] Changes or modifications made to this equipment not expressly approved by Endress+Hauser may void the FCC authorization to operate this equipment.

This equipment has been tested and found to comply with the limits for a Class B digital device, pursuant to Part 15 of the FCC Rules. These limits are designed to provide reasonable protection against harmful interference in a residential installation. This equipment generates, uses and can radiate radio frequency energy and, if not installed and used in accordance with the instructions, may cause harmful interference to radio communications. However, there is no guarantee that interference will not occur in a particular installation. If this equipment does cause harmful interference to radio or television reception, which can be determined by turning the equipment off and on, the user is encouraged to try to correct the interference by one or more of the following measures:
- Reorient or relocate the receiving antenna
- Increase the separation between the equipment and receiver
- Connect the equipment into an outlet on a circuit different from that to which the receiver is connected
- Consult the dealer or an experienced radio/TV technician for help

- The installation of the LPR/TLPR device shall be done by trained installers, in strict compliance with the manufacturer's instructions.
- The use of this device is on a "no-interference, no-protection" basis. That is, the user shall accept operations of high-powered radar in the same frequency band which may interfere with or damage this device. However, devices found to interfere with primary licensing operations will be required to be removed at the user's expense.
- Only for usage without the accessory "flooding protection tube", i.e. NOT in the free-field: This device shall be installed and operated in a completely enclosed container to prevent RF emissions, which can otherwise interfere with aeronautical navigation.

FCC / Industry Canada IDs

Tank level-probing radar
- **HVIN: FMR10**
  - FCC ID: LCGFMR2XK
  - Industry Canada ID: 2519A-2K
- **HVIN: FMR10X**
  - FCC ID: LCGFMR2XKT
  - Industry Canada ID: 2519A-2KT

Level-probing radar:
- HVIN: **FMR10+R7**
  - FCC ID: LCGFMR2XKF
  - Industry Canada ID: 2519A-2KF
- HVIN: **FMR10+R7X**
  - FCC ID: LCGFMR2XKL
  - Industry Canada ID: 2519A-2KL

Japanese Radio Law and Japanese Telecommunications Business Law Compliance

This device is granted pursuant to the Japanese Radio Law (電波法) and the Japanese Telecommunications Business Law (電気通信事業法). This device should not be modified (otherwise the granted designation number will become invalid).

Certified No.: 202-LSF004

The products are labelled with the Technical Conformity Mark (GITEKI) from Japanese Ministry of Internal Affairs and Communications (MIC) on the name plate.



A0032960

Mexico

El funcionamiento de este equipo está sujeto a las dos condiciones siguientes:
- (1) Este equipo o aparato no puede causar interferencias perjudiciales.
- (2) Este equipo o aparato debe aceptar todas las interferencias, incluyendo las que puedan causar un funcionamiento indeseado del equipo o aparato.

Este producto contiene un módulo inalámbrico

Marca: Endress+Hauser

Modelo: FMR10



A0034100

Other standards and guidelines

- IEC/EN 61010-1
  Protection Measures for Electrical Equipment for Measurement, Control, Regulation and Laboratory Procedures
- IEC/EN 55011
  "EMC Emission, RF Emission for Class B". Industrial, scientific and medical equipment – Electromagnetic disturbance characteristics - Limits and methods of measurement
- IEC/EN 61000-4-2
  EMC Immunity, ESD (Performance Criteria A). Electromagnetic compatibility (EMC): Testing and measurement techniques - Electrostatic discharge immunity test (ESD)
- IEC/EN 61000-4-3
  EMC Immunity, RF field susceptibility (Performance Criteria A). Electromagnetic compatibility (EMC): Testing and measurement techniques - Radiated, radio-frequency, electromagnetic field immunity test
- IEC/EN 61000-4-4
  EMC Immunity, bursts (Performance Criteria B). Electromagnetic compatibility (EMC): Testing and measurement techniques - Electrical fast transient/burst immunity test
- IEC/EN 61000-4-5
  EMC Immunity, surge (Performance Criteria B). Electromagnetic compatibility (EMC): Testing and measurement techniques - Surge immunity test
- IEC/EN 61000-4-6
  EMC Immunity, conducted RF (Performance Criteria A). Electromagnetic compatibility (EMC): Testing and measurement techniques - Immunity to conducted disturbances induced by radio-frequency fields
- IEC/EN 61000-4-8
  EMC Immunity, magnetic fields 50 Hz. Electromagnetic compatibility (EMC): Testing and measurement techniques - Power frequency magnetic field immunity test
- EN 61000-6-3
  EMC Emission, conducted RF. EMC: Radiated interference - Residential, commercial and light industry environment
- NAMUR NE 21
  Electromagnetic compatibility (EMC) of industrial process and laboratory control equipment
- NAMUR NE 43
  Standardization of the signal level for the breakdown information of digital transmitters with analog output signal.
- NAMUR NE 107
  Status classification as per NE107
- NAMUR NE 131
  Requirements for field devices for standard applications
- IEEE 802.15.1
  Requirements for the *Bluetooth*® wireless technology interface

Ordering information

Detailed ordering information is available from your nearest sales organization www.addresses.endress.com or in the Product Configurator at www.endress.com:

1. Select the product using the filters and search field.
2. Open the product page.

3. Select **Configuration**.

Product Configurator - the tool for individual product configuration
- Up-to-the-minute configuration data
- Depending on the device: Direct input of measuring point-specific information such as measuring range or operating language
- Automatic verification of exclusion criteria
- Automatic creation of the order code and its breakdown in PDF or Excel output format
- Ability to order directly in the Endress+Hauser Online Shop

Accessories

Device-specific accessories

Protective cover

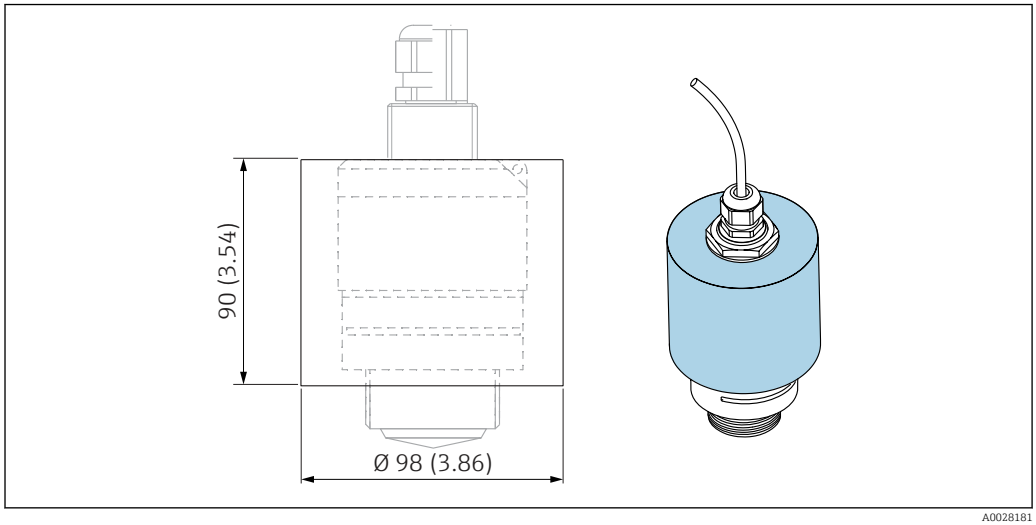

24 *Dimensions of protective cover, engineering unit: mm (in)*

Material
PVDF

Order number
52025686

The sensor is not completely covered.

Securing nut G 1-1/2"

Suitable for devices with G 1-1/2" and MNPT 1-1/2" process connection.

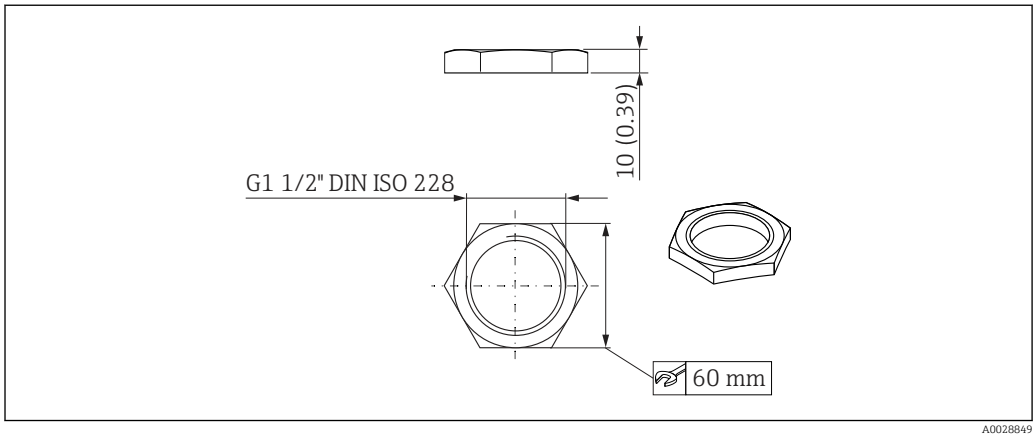

25 *Dimensions of securing nut, engineering unit: mm (in)*

Material
PC

Order number
52014146

Flooding protection tube 40 mm (1.5 in)

Suitable for use with devices with a 40 mm (1.5 in) antenna and G 1-1/2" process connection on front.

The flooding protection tube can be ordered together with the device via the product structure "Accessory enclosed".

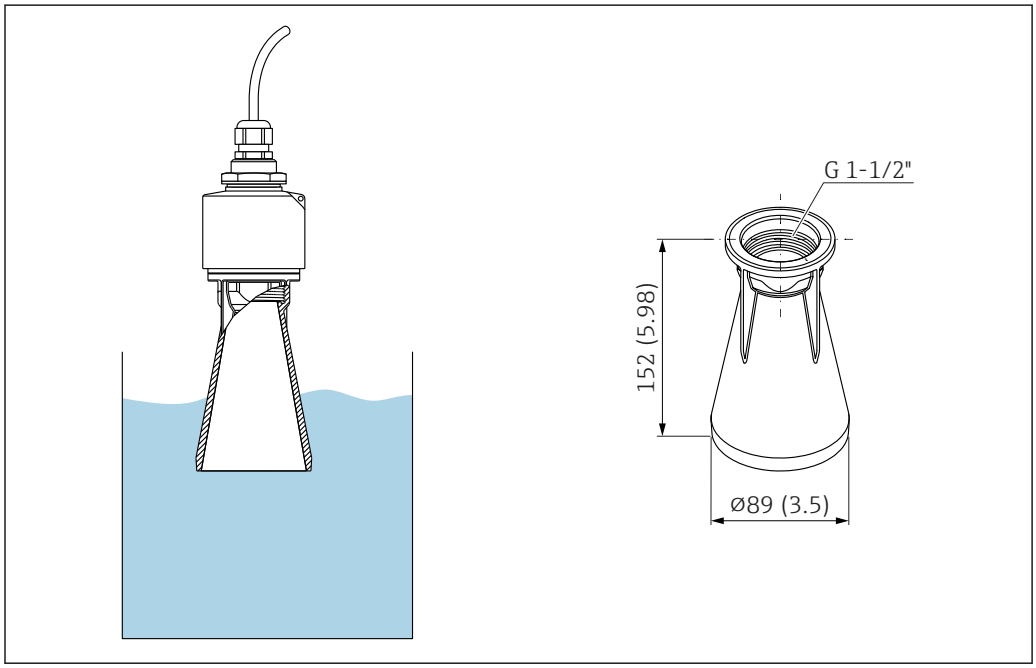

26 Dimensions of 40 mm (1.5 in) flooding protection tube, engineering unit: mm (in)

Material
PBT-PC, metalized

Order number
71325090

Mounting bracket, adjustable

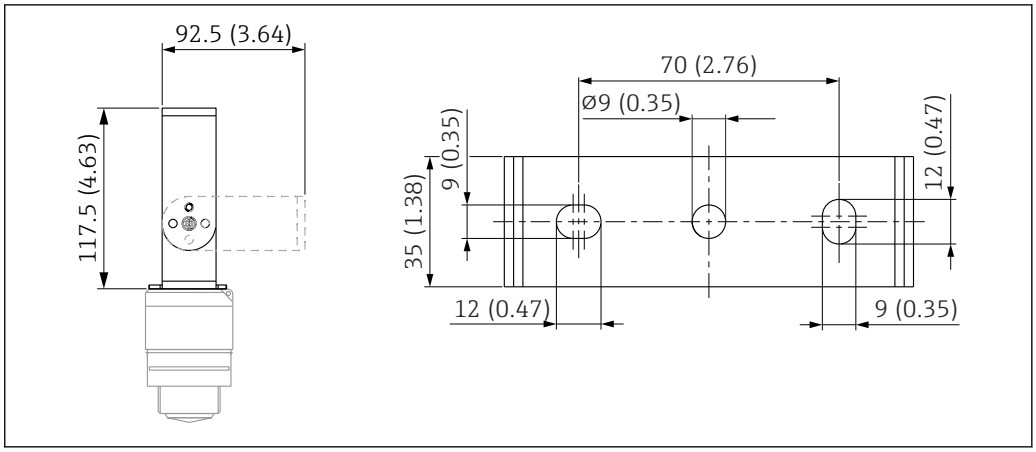

27 *Dimensions of mounting bracket, engineering unit: mm (in)*

Consists of:
- 1 × mounting bracket, 316L (1.4404)
- 1 × angle bracket, 316L (1.4404)
- 3 × screws, A4
- 3 × securing disks, A4

Order number
71325079

FAX50 screw-in flange

The FAX50 screw-in flange is a universal flange which can be used for three standards (DIN - ASME - JIS) owing to its min./max. dimensions.

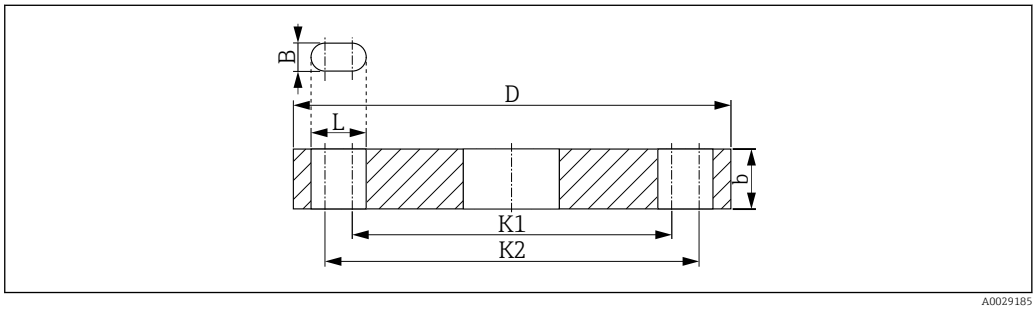

28 *Dimensions of the UNI flange FAX50*

L *Bore diameter*
K1, K2 *Diameter of pitch circle*
D *Flange diameter*
b *Total flange thickness*
B *Slotted hole (width)*

Order number
FAX50-####

For available materials and dimensions, see TI00426F

Angle bracket for wall mounting

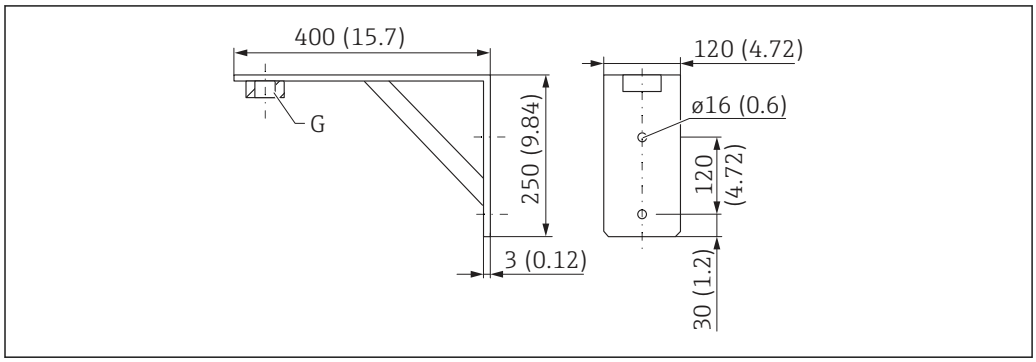

29 Dimensions of angle bracket. Unit of measurement mm (in)

G Sensor connection in accordance with product structure "Process connection on front"

Weight
3.4 kg (7.5 lb)

Material
316L (1.4404)

Order number for G 1-1/2" process connection
71452324
Also suitable for MNPT 1-1/2"

Cantilever with pivot

Installation type sensor process connection rear side

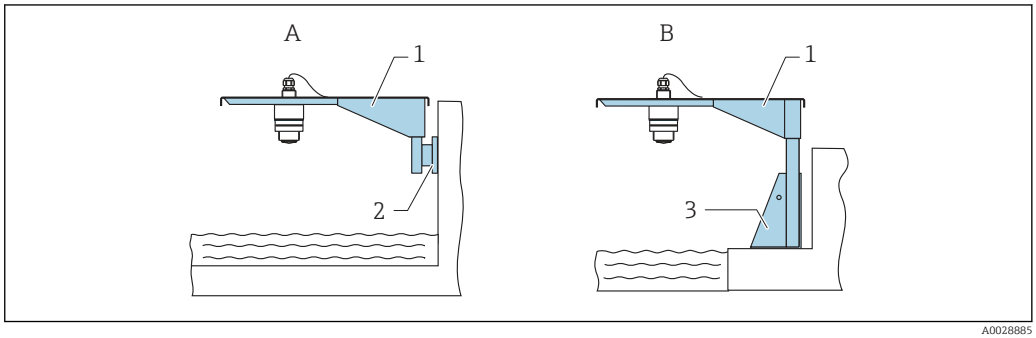

30 *Installation type sensor process connection rear side*

A Installation with cantilever and wall bracket
B Installation with cantilever and mounting frame
1 Cantilever
2 Wall bracket
3 Mounting frame

Cantilever arm 500 mm, for G 1" or MNPT 1" connections on rear

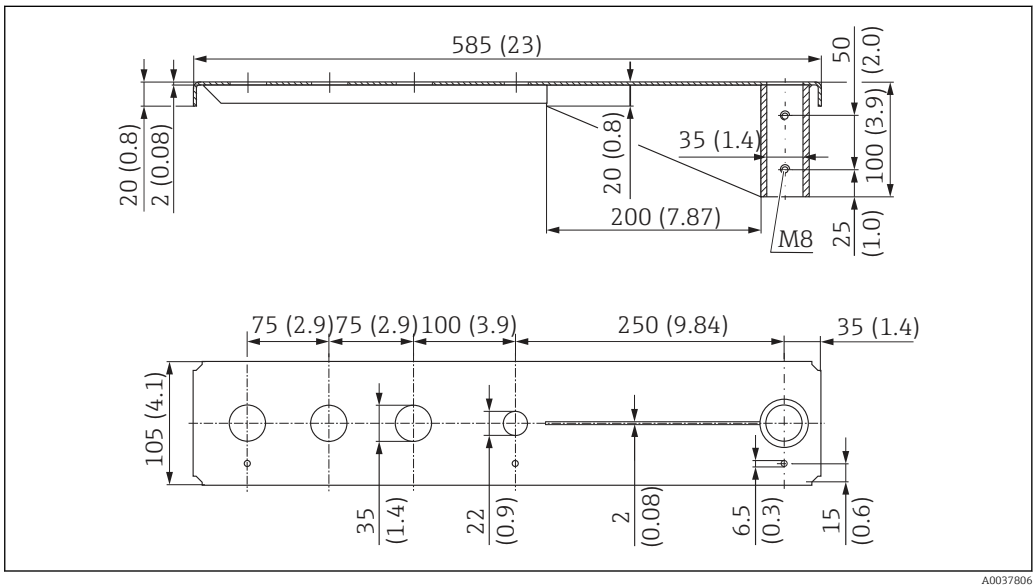

31 *Dimensions. Unit of measurement mm (in)*

Weight:
3.0 kg (6.62 lb)

Material
316L (1.4404)

Order number
71452315

- 35 mm (1.38 in) openings for all G 1" or MNPT 1" connections on rear
- 22 mm (0.87 in) opening can be used for any additional sensor
- Retaining screws are included in delivery

Cantilever arm 1 000 mm, for G 1" or MNPT 1" connections on rear

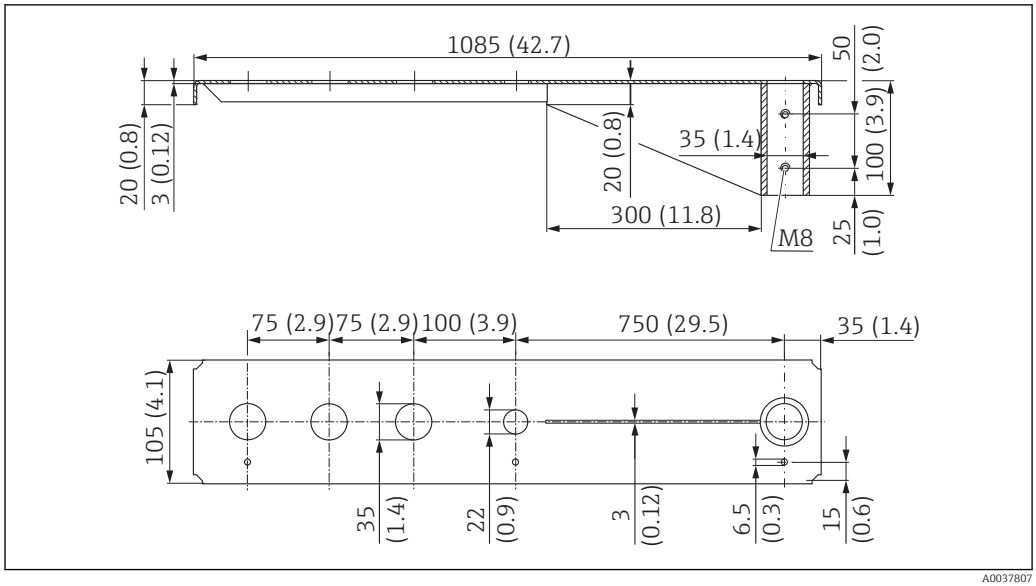

32 *Dimensions. Unit of measurement mm (in)*

Weight:
5.4 kg (11.91 lb)

Material
316L (1.4404)

Order number
71452316

- 35 mm (1.38 in) openings for all G 1" or MNPT 1" connections on rear
- 22 mm (0.87 in) opening can be used for any additional sensor
- Retaining screws are included in delivery

Installation type sensor process connection on front

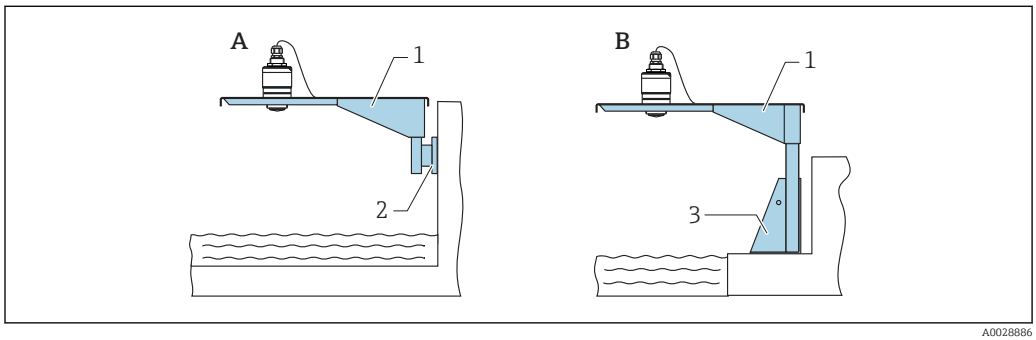

33 *Installation type sensor process connection on front*

A Installation with cantilever and wall bracket
B Installation with cantilever and mounting frame
1 Cantilever
2 Wall bracket
3 Mounting frame

Cantilever 500 mm, 1.5" sensor

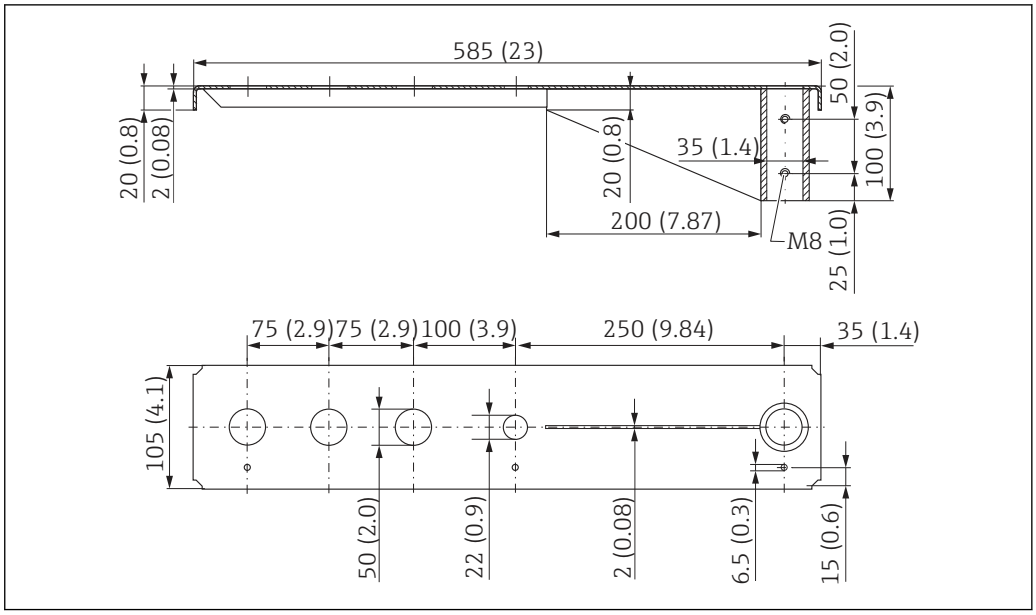

34 *Dimensions. Unit of measurement mm (in)*

Weight:
3.01 kg (6.84 lb)

Material
316L (1.4404)

Order number
71452318

- 50 mm (2.17 in) openings for all G 1-½" (MNPT 1-½") connections on front
- 22 mm (0.87 in) opening can be used for an additional sensor
- Retaining screws are included in delivery

Cantilever 1 000 mm, 1.5" sensor

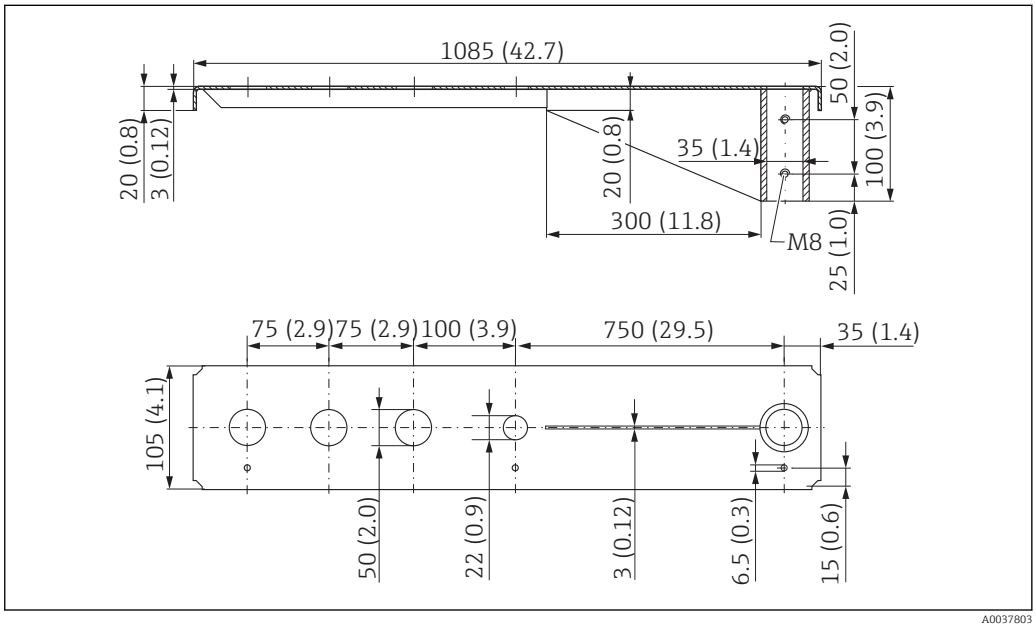

35 *Dimensions. Unit of measurement mm (in)*

Weight:
5.2 kg (11.47 lb)

Material
316L (1.4404)

Order number
71452319

- 50 mm (2.17 in) openings for all G 1-½" (MNPT 1-½") connections on front
- 22 mm (0.87 in) opening can be used for an additional sensor
- Retaining screws are included in delivery

Frame, 700 mm (27.6 in)

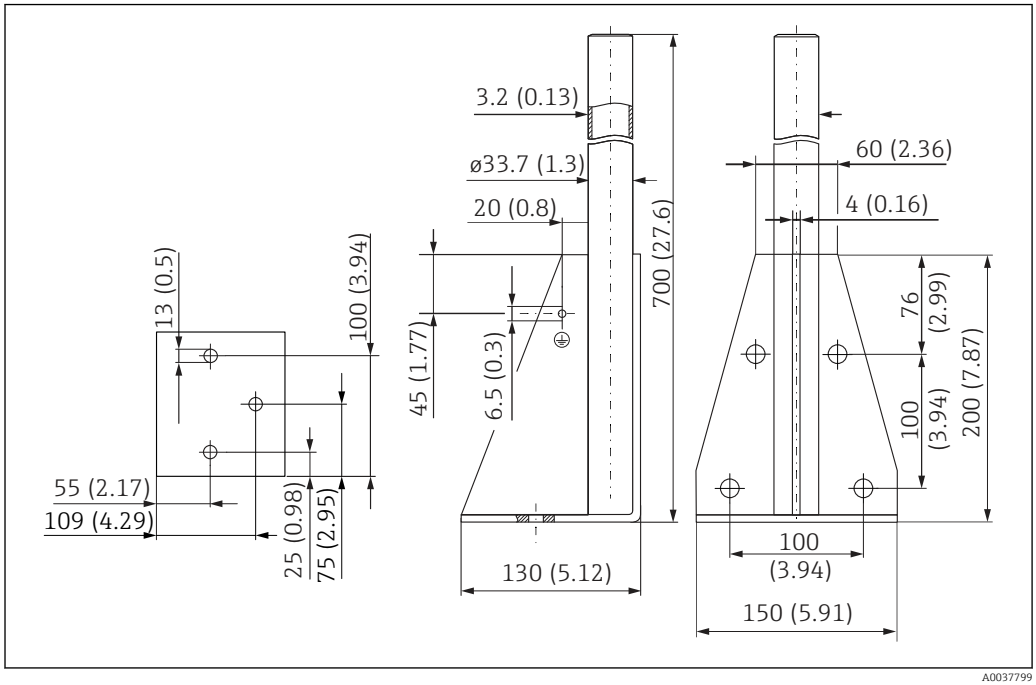

36 Dimensions. Unit of measurement mm (in)

Weight:
4.2 kg (9.26 lb)

Material
316L (1.4404)

Order number
71452327

Frame, 1400 mm (55.1 in)

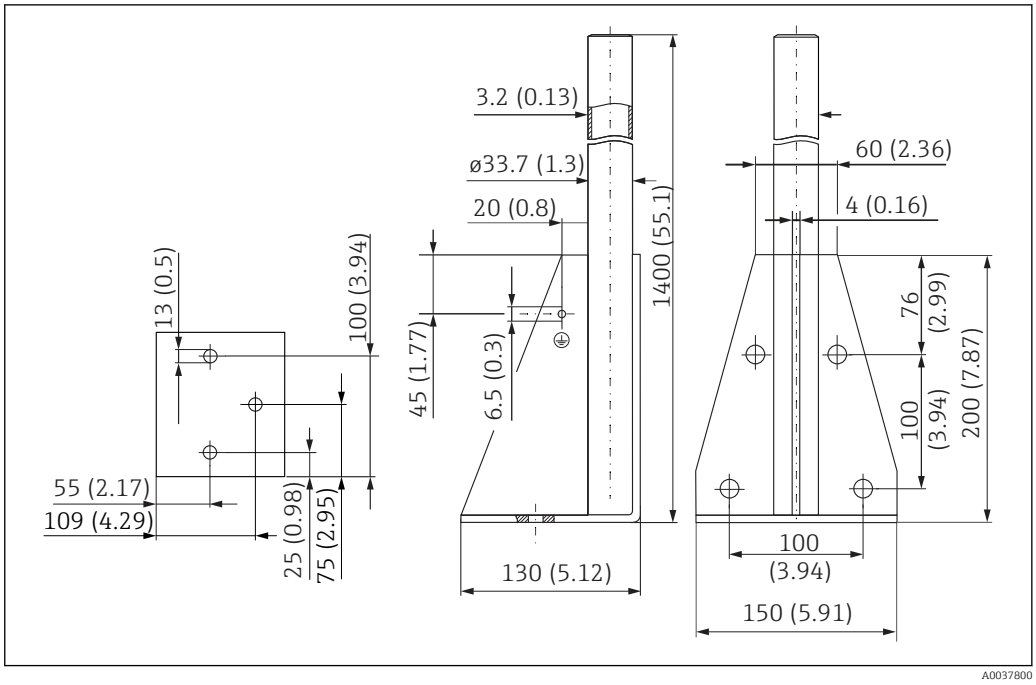

37 Dimensions. Unit of measurement mm (in)

Weight:
6 kg (13.23 lb)

Material
316L (1.4404)

Order number
71452326

Wall bracket for cantilever with pivot

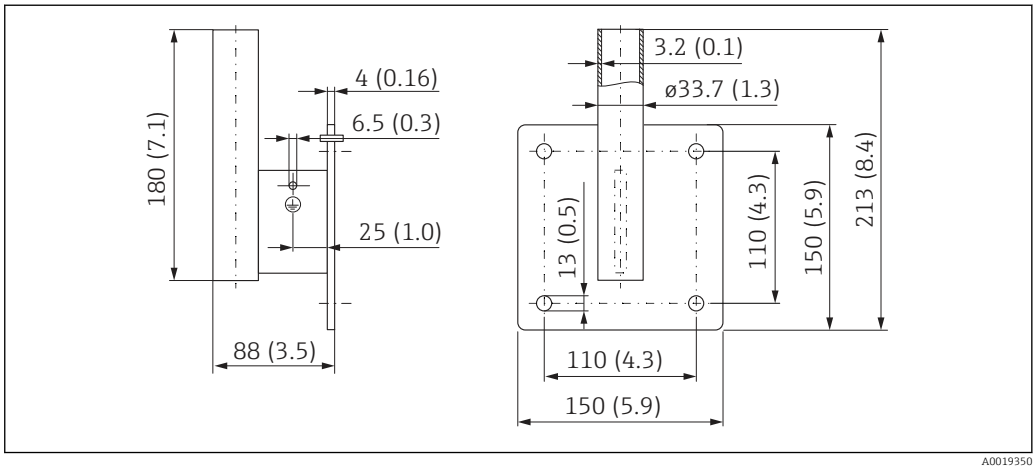

38 Dimensions of the wall bracket. Unit of measurement mm (in)

Weight
1.2 kg (2.65 lb)

Material
316L (1.4404)

Order number
71452323

Ceiling mounting bracket

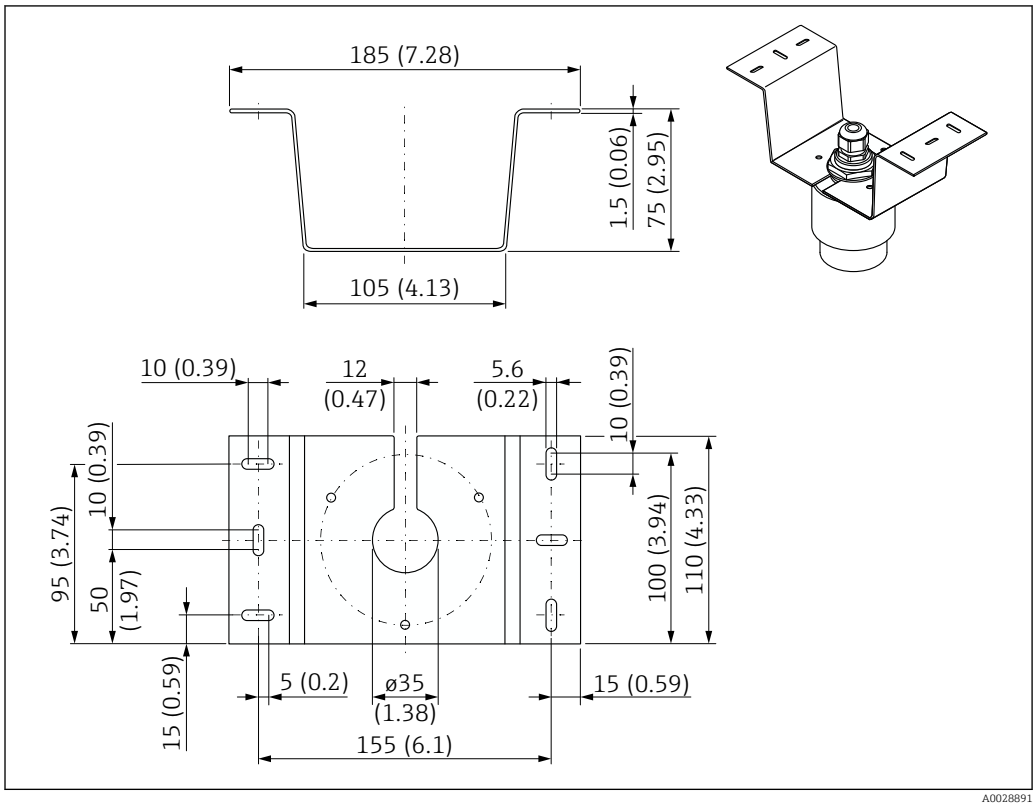

39 Dimensions of ceiling mounting bracket. Unit of measurement mm (in)

Weight:
0.4 kg (0.87 lb)

Material
316L (1.4404)

Order number
71093130

Pivotable mounting bracket for installation in manhole over sewer channel

The pivotable mounting bracket is used to install the device in a manhole over a sewer channel.

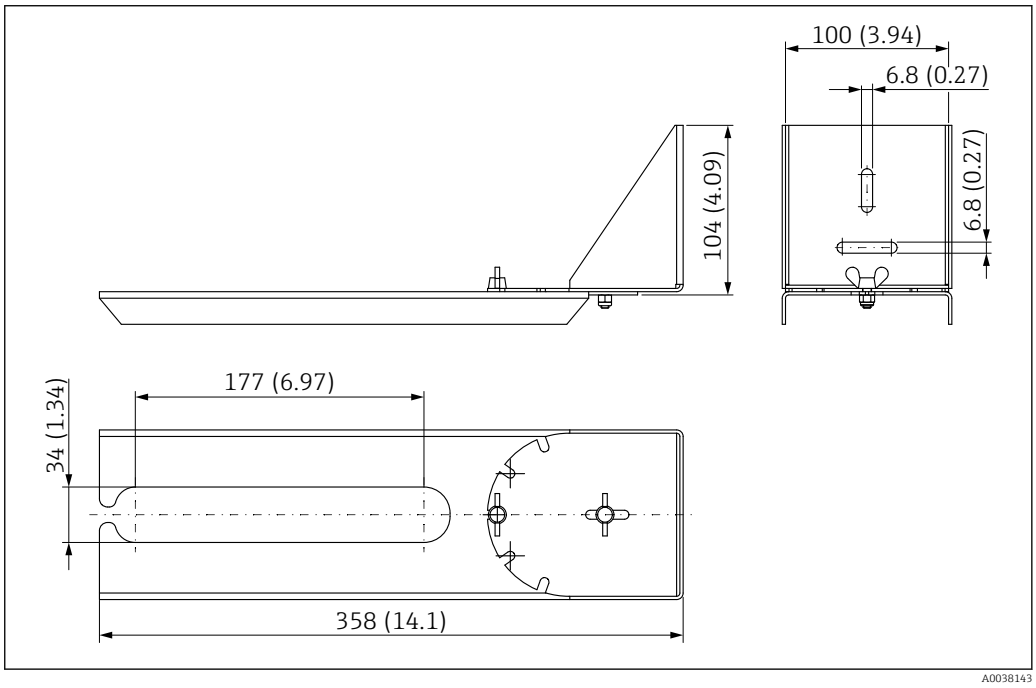

40 Dimensions of pivotable mounting bracket. Unit of measurement mm (in)

Weight:
1 kg (2.28 lb)

Material
316L (1.4404)

Order number
71429910

Horizontal mounting bracket for installation in confined spaces in sewer shaft

The horizontal mounting bracket for sewer shafts is used to install the device in confined spaces.

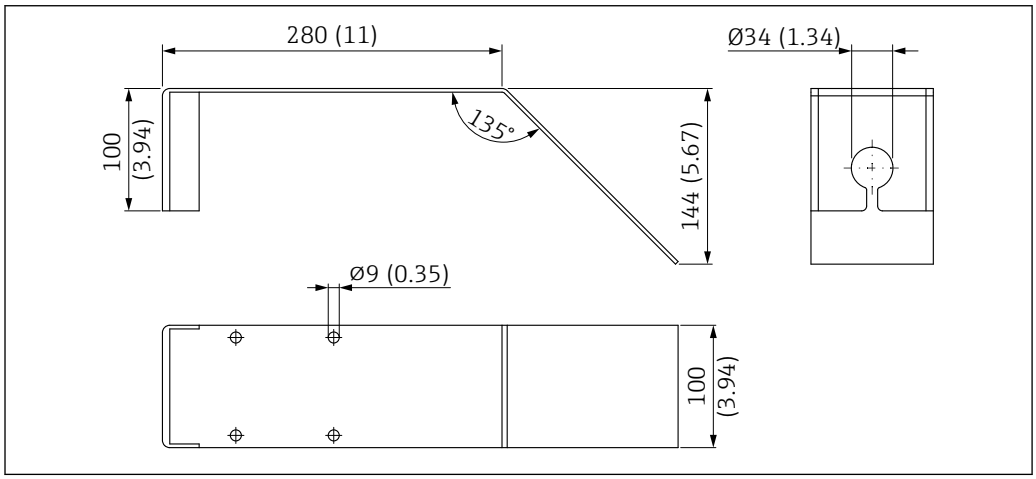

41 Dimensions of horizontal mounting bracket for sewer shafts. Unit of measurement mm (in)

Weight:
1.5 kg (3.25 lb)

Material
316L (1.4404)

Order number
71429905

Service-specific accessories

Applicator
Software for selecting and sizing Endress+Hauser measuring devices:
- Calculation of all the necessary data for identifying the optimum measuring device: e.g. pressure loss, accuracy or process connections.
- Graphic illustration of the calculation results

Administration, documentation and access to all project-related data and parameters over the entire life cycle of a project.

Applicator is available:
https://portal.endress.com/webapp/applicator

Configurator
Product Configurator - the tool for individual product configuration
- Up-to-the-minute configuration data
- Depending on the device: Direct input of measuring point-specific information such as measuring range or operating language
- Automatic verification of exclusion criteria
- Automatic creation of the order code and its breakdown in PDF or Excel output format
- Ability to order directly in the Endress+Hauser Online Shop

The Configurator is available on the Endress+Hauser website: www.endress.com -> Click "Corporate" -> Select your country -> Click "Products" -> Select the product using the filters and the search field -> Open the product page -> The "Configure" button to the right of the product image opens the Product Configurator.

W@M
Life cycle management for your plant
W@M supports you with a wide range of software applications over the entire process: from planning and procurement, to the installation, commissioning and operation of the measuring devices. All the relevant device information, such as the device status, spare parts and device-specific documentation, is available for every device over the entire life cycle.
The application already contains the data of your Endress+Hauser device. Endress+Hauser also takes care of maintaining and updating the data records.

W@M is available:
www.endress.com/lifecyclemanagement

Documentation

For an overview of the scope of the associated Technical Documentation, refer to the following:
- *Device Viewer* (www.endress.com/deviceviewer): Enter the serial number from the nameplate
- *Endress+Hauser Operations app*: Enter serial number from nameplate or scan matrix code on nameplate.

Registered trademarks

Apple®
Apple, the Apple logo, iPhone, and iPod touch are trademarks of Apple Inc., registered in the U.S. and other countries. App Store is a service mark of Apple Inc.

Android®
Android, Google Play and the Google Play logo are trademarks of Google Inc.

Bluetooth®
The *Bluetooth®* word mark and logos are registered trademarks owned by the Bluetooth SIG, Inc. and any use of such marks by Endress+Hauser is under license. Other trademarks and trade names are those of their respective owners.



www.addresses.endress.com

Endress+Hauser

People for Process Automation