FLOWSIC610

Custody transfer ultrasonic flowmeter for hydrogen gas measurement

Compact, reliable and ready for the future of clean energy

- Tailor made for hydrogen applications
- MID Approved
- Accuracy class 1 meter for all sizes starting from DN50 to DN400 with up to 1:160 turndown ratio
- Ready for energy equivalent flow - proven flow performance up to 60 m/s (200 ft/s)
- Hydrogen purity indication - real time values for process control
- Quick and easy commissioning



Endress+Hauser
People for Process Automation

Hydrogen

How to ensure quality and regulatory compliance along the hydrogen value chain?

The global energy landscape is in the middle of an unprecedented transformation. Driven by the urgent need to deaccelerate global warming, cut greenhouse gas emissions, and secure reliable long-term energy supplies, countries worldwide are accelerating the transition from fossil fuels to cleaner and more sustainable energy solutions.
In this context, hydrogen is the energy carrier of the future and an important element in the decarbonization.
It can be produced from renewable energy sources like wind, solar or water power, stored over long periods underground, and utilized across a wide range of applications without generating carbon dioxide.

This unique combination of attributes positions hydrogen as a cornerstone of future energy systems. However, the adoption of hydrogen infrastructure introduces new technical challenges. Well known gas meters were developed primarily for natural gas, whereas hydrogen exhibits markedly different physical and chemical properties.
It is significantly lighter, more diffusive, has a lower volumetric energy content, and a speed of sound approximately three times higher than that of natural gas. These differences create challenges for accurate and long-term stable hydrogen measurement. For these reasons, ultrasonic flowmeters are best suited for accurate and stable custody transfer measurement of hydrogen gas.



Ultrasonic flow measurement

Ready for 100% hydrogen custody transfer gas measurement. Now!

Ultrasonic flow measurement has set a new standard for reliability, durability, and measurement accuracy in the natural gas industry over the past two decades.

While the hydrogen market moves from pilot projects to large-scale deployment, choosing the right measurement technology becomes critical. Ultrasonic meters are already recognized as the ideal solution for custody transfer hydrogen applications, combining proven performance with future-ready capabilities.
By maintaining hydrogen flow measurement at three times higher velocities (up to 60 m/s [200 ft/s]) than for natural gas, FLOWSIC610 allows the transportation of the same amount of energy through repurposed natural gas network – solving an “equivalent energy transition” challenge.

With fast response times, excellent accuracy, digital outputs, and seamless integration into modern control systems, ultrasonic flowmeters align perfectly with the digitalization of energy infrastructure. As hydrogen networks expand and evolve, they offer a scalable, future-proof measurement solution that supports safety, efficiency, and confidence in the hydrogen economy.

Everything from a single source Endress+Hauser offers complete turnkey metering solutions. This includes flowmeters, pressure and temperature sensors, analyzers, flow computers, piping and project work. Customers receive a factory-tested, ready-to-use hydrogen metering run from a single supplier. This minimizes interfaces, risks and project timelines.

The advantages of ultrasonic flowmeters

- Low measurement uncertainty
- Wide range of nominal diameters (DN50 to DN400)
- High measuring span up to 1:160
- No pressure loss, blockage-free
- No mechanical moving parts, no pulsation
- Nearly maintenance-free due to intrinsically safe transducers
- Intelligent diagnostics and permanent operational self-monitoring

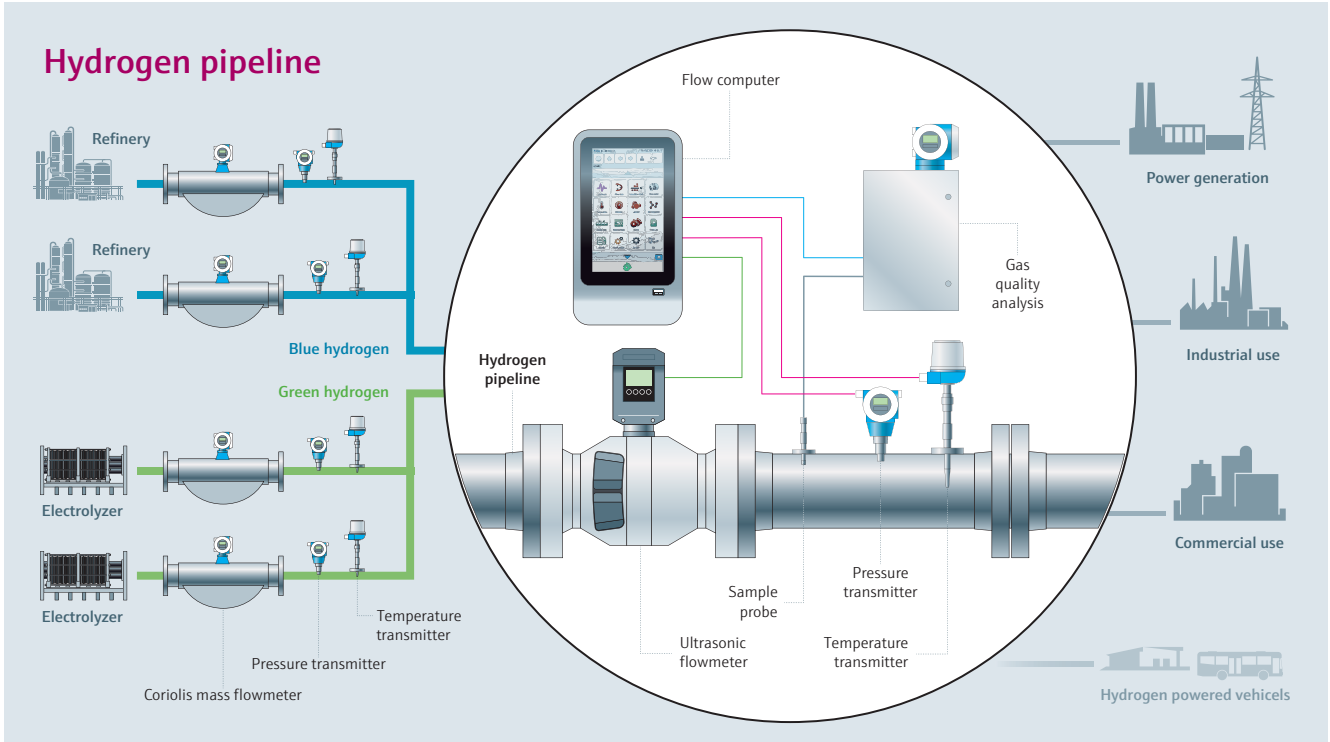

FLOWSIC610

Designed and certified for custody transfer measurement of hydrogen gas

State-of-the art hydrogen transducers developed for high-speed of sound, alongside completely new electronics operating at a 1000 kHz frequency and reimagined production control and testing procedures, combine to create this compact, accurate and ready for the future of clean energy flowmeter.

FLOWSIC610 is a modern ultrasonic flowmeter approved to the MID for the custody transfer measurement of hydrogen gas for all sizes from DN50 to DN400. It is a robust and reliable solution designed for the challenging operating conditions of hydrogen applications.



- **Meter sizes**
  DN50...DN400
- **Accuracy**
  Class 1
- **Path layout**
  4 parallel paths ≥ DN100
  4 crossed paths (2x2) DN50/DN80
- **Operating temperature**
  -40...+60 °C
- **Flow rates**
  5 m^3/h (DN50)...25,000+ m^3/h (DN400)
- **Operating pressure**
  16...100 bar
  8...100 bar - optionally
- **Inlet piping requirements**
  ≥ 10 DN for ≥ DN100
  ≥5DN - FC - 10DN for DN50/DN80

Wide range of nominal diameters - from DN50 to DN400 and all MID certified!



2" / DN50



8" / DN200



16" / DN400

Fields of applications

Explore the FLOWSIC610 hydrogen applications!

Hydrogen is valuable. That's why accurate flow measurement is essential across the entire hydrogen value chain. FLOWSIC610 provides reliable, non-intrusive measurement for all hydrogen types, including green, blue, grey, and brown hydrogen, ensuring precise allocation measurement and energy accounting. From production to transportation, storage, and bulk consumers end usage – FLOWSIC610 maintains high level accuracy. This enables safe operation, transparent commercial transactions, and a scalable, economically valuable transition to hydrogen.

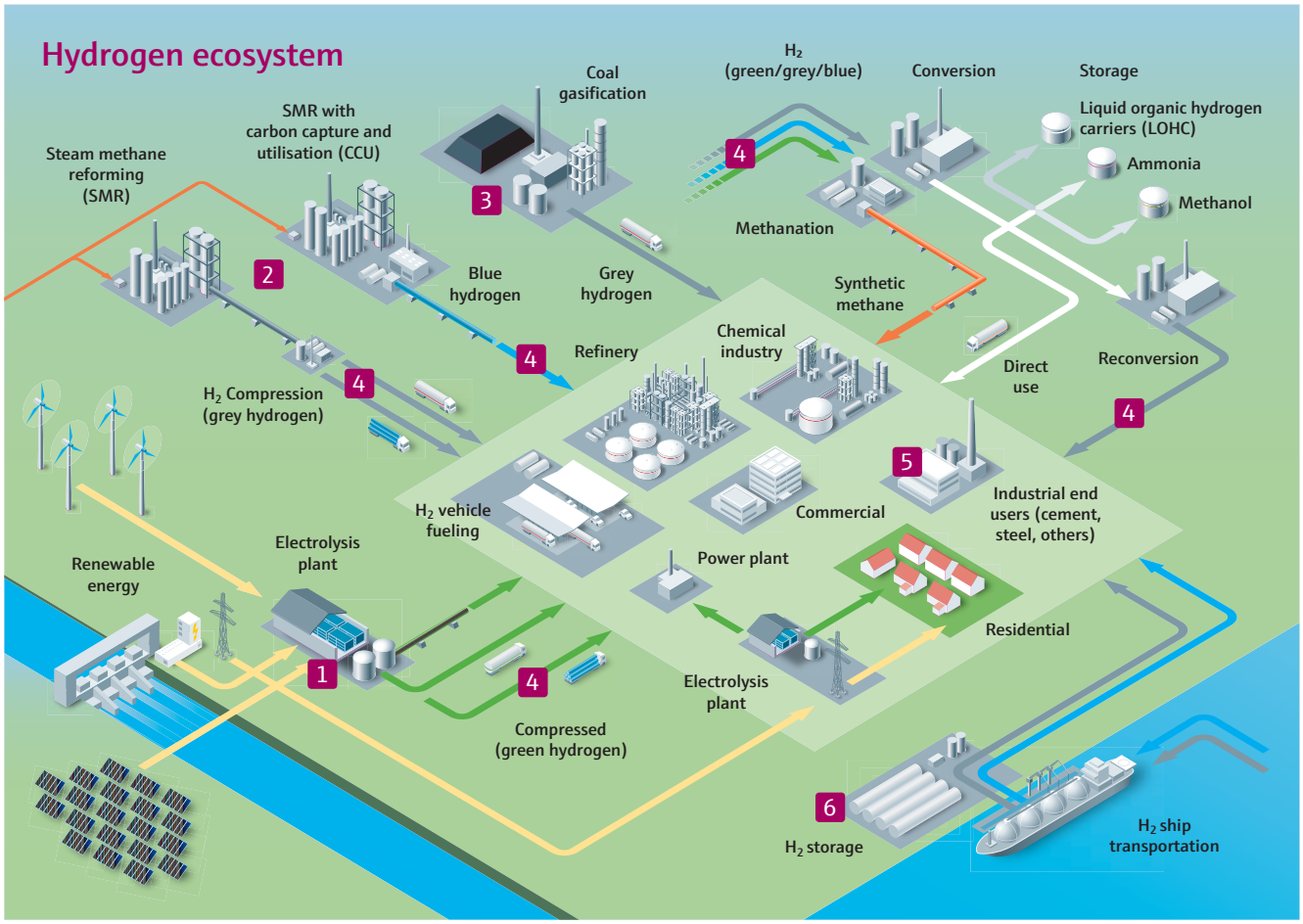

Fields of applications

1. Green H_2 measurement from eletrolysis output
2. Grey and blue H_2 measurement from SMR
3. Brown H_2 measurement from coal gasification plant output
4. Transportation and compressor station measurement
5. Bulk consumers - at the inlet of power plants, metal or cement plants, etc
6. Storage applications

State of the art sensor technoloy

Proven in over 50,000 installations worldwide

Our ultrasonic gas meters have been used successfully at over 50,000 installations worldwide for more than 30 years. Over the years, Endress+Hauser has developed transducers for operation at extremely low and high temperatures, pressures up to 450 bar, wet gas, dirty gas, extremely corrosive conditions such as biogas, oxygen and hydrogen sulfide, gases with high acoustic damping (heavy hydrocarbons, CO_2, H_2S) and, conversely, for gases with high speed of sound.
This also includes applications with different amounts of hydrogen content. This knowledge was incorporated into the development of special hydrogen transducers for fiscal usage in FLOWSIC610.

Eight high-performance transducers are installed inside the device. They enable the ultrasonic signal to be sent precisely through the gas to the receiver and back. The transducers are manufactured manually in Germany in accordance to strict standards and quality control. The premium quality transcducers make the heart of the flow meter and provide high precision. The ultrasonic technology allows measurement in a range of gases due to transit time measurement principle. With a calibration the measurement accuracy increases significantly. This is why the uncertainty of FLOWSIC610 can be as low as 0.1% (excluding uncertainty of a calibration test facility) when calibrated on a high-pressure hydrogen test stand.



With over 30 different types of ultrasonic transducers, the FLOWSIC ultrasonic flowmeters can be used in many different application conditions with varying pressures, temperatures and gas mixtures. The sensors are usually made from titanium or stainless steel. The hermetically sealed intrinsically safe design works without an active electronic in the sensor directly. This makes the sensors very robust and long term stable.

Purity indication

Real time values for process control

The modern emerging hydrogen market is characterized by incredibly high requirements for medium purity. The requirements for the purity of hydrogen transported through pipelines can reach 99.98%. FLOWSIC610 with its purity indication option equips plant and network operators to handle these challenges instantaneously.

When the purity falls below the established limit value, the FLOWSIC610 reports this automatically to the control center. This enables changes in the hydrogen purity and therefore the heating value to be detected in real time and substantial savings in time and costs to be achieved. The Purity Indicator, which is based on the i-diagnostics™ technology, assists the user with optimizing the network balance. It thus makes a significant contribution to ensuring the contractually agreed gas qualities in applications where it is not possible to use a gas chromatograph.

Your benefits

- Real-time monitoring of H_2 purity
- Adjustable customer limits
- Backup and validation of the gas chromatograph
- Upgrades available on-site
- Maintenance and operating costs free of charge
- No additional installation costs for hardware

Purity indication warning

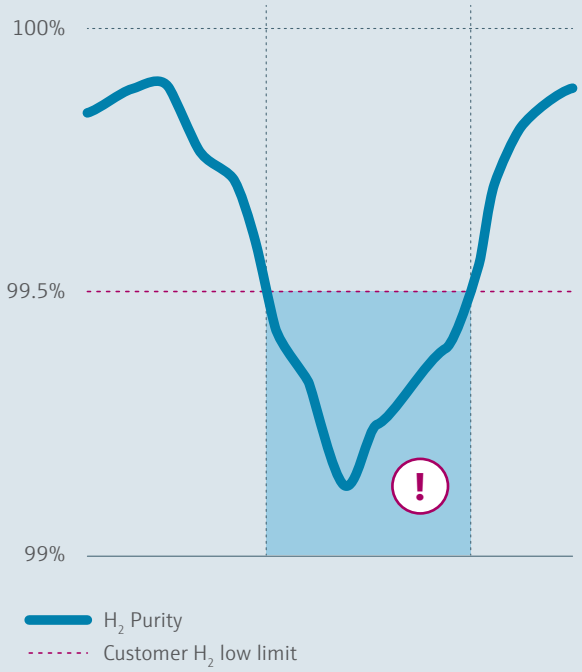

Purity indication – At a glance

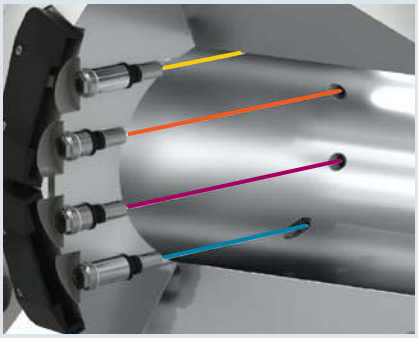

FLOWSIC610 has four measurement paths, each of which measures the speed of sound (SOS) approximately ten times per second. SOS is gas dependent, so it can be used to indicate purity. H_2 has a much higher SOS than all relevant impurities (CH_4, O_2, N_2, CO and CO_2). Adding only small amounts of these gases to pure hydrogen significantly reduces the speed of sound in the mixture. This makes it possible to detect and estimate very low quantities of impurities by using an algorithm that compares the SOS measured by the ultrasonic flowmeter with the reference value. Measuring along four different paths distributed across the pipe cross section (Path 1... Path 4) significantly increases precision due to averaging in the event of non-homogeneous mixing.

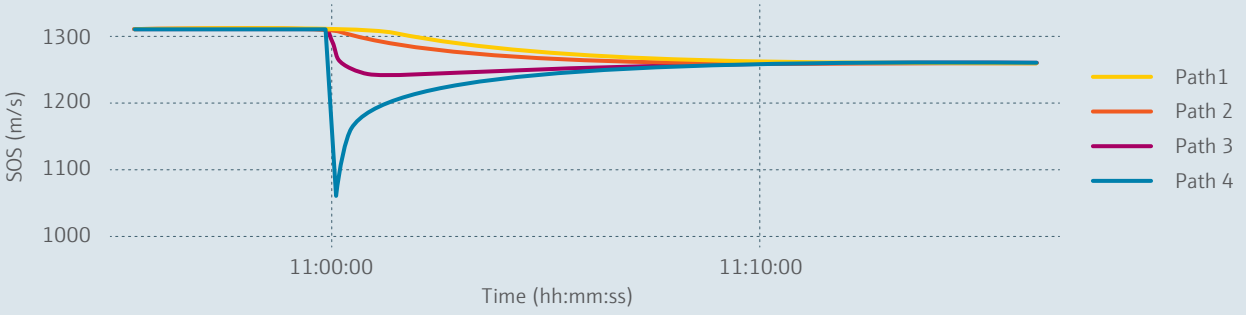

Simple integration, intelligent diagnostics

Bluetooth® or wired: always well connected
In addition to the standardized interfaces for data communication, FLOWSIC610 is equipped with a dedicated commissioning and service interface: Equipped with a Bluetooth® compatible adapter, wireless connections of up to 30 m are possible with Bluetooth® enabled end devices. Additional device-specific adapters are not required. Alternatively, a wired adapter with USB-C interface is also available.

Guided commissioning and inspection
FLOWgate™ enables online or offline access to the FLOWSIC610 and therefore to all measured value and diagnostic data at any time via computer or mobile devices.
Various assistance functions, such as the guided commissioning wizard, make operating the device much easier. This minimizes the time, complexity, and therefore the effort involved in commissioning the device. The quick status bar provides immediate information on the current status of the meter and the system.

Everything in one view The FLOWgate™ Device Manager shows all registered devices, and offers device grouping and a convenient data backup function.
The intuitive operation and multi-language support of FLOWgate™ makes the FLOWSIC610 gas flow meter easy to use.



1 Easy connection between meter and PC or mobile for commissioning, maintenance, and service - either wireless (Bluetooth®) or wired (USB)

2 Guide connection wizard enabling meter connection with only a few clicks

Certifications

More information
www.endress.com/flowsic610

Process and asset monitoring

Real-time monitoring of process and measurement conditions With modern diagnostics features like purity indication via speed of sound, plausibility check of individual path values, the indication of process changes as e.g. sudden hydrogen quality changes or partially blocked valves is possible. That allows switching from time triggered to event triggered process interactions like gas sampling or piping inspections. These features help operators to keep their custody measurement under control at all times.

High measurement availability by path compensation In the unlikely event that process conditions cause malfunction of a single measurement path – FLOWSIC610 keeps running inside uncertainty limits. With the path compensation feature, the measurement availability and therefore process stability are ensured. Inspection of the metering section can wait until the next regular plant maintenance.

Easy Asset Monitoring All relevant measurement data, meter diagnostics, settings, and live sessions can be visualized and stored in standardized FLOWgate™ reports and files. We offer cloud based dashboards, which visualize health status and process data from all your measurement tags and assets. This eases monitoring, trend diagnosis and troubleshooting of your asset – from the control room or from any standard web-browser, anywhere and anytime without the need to visit the meter on site.

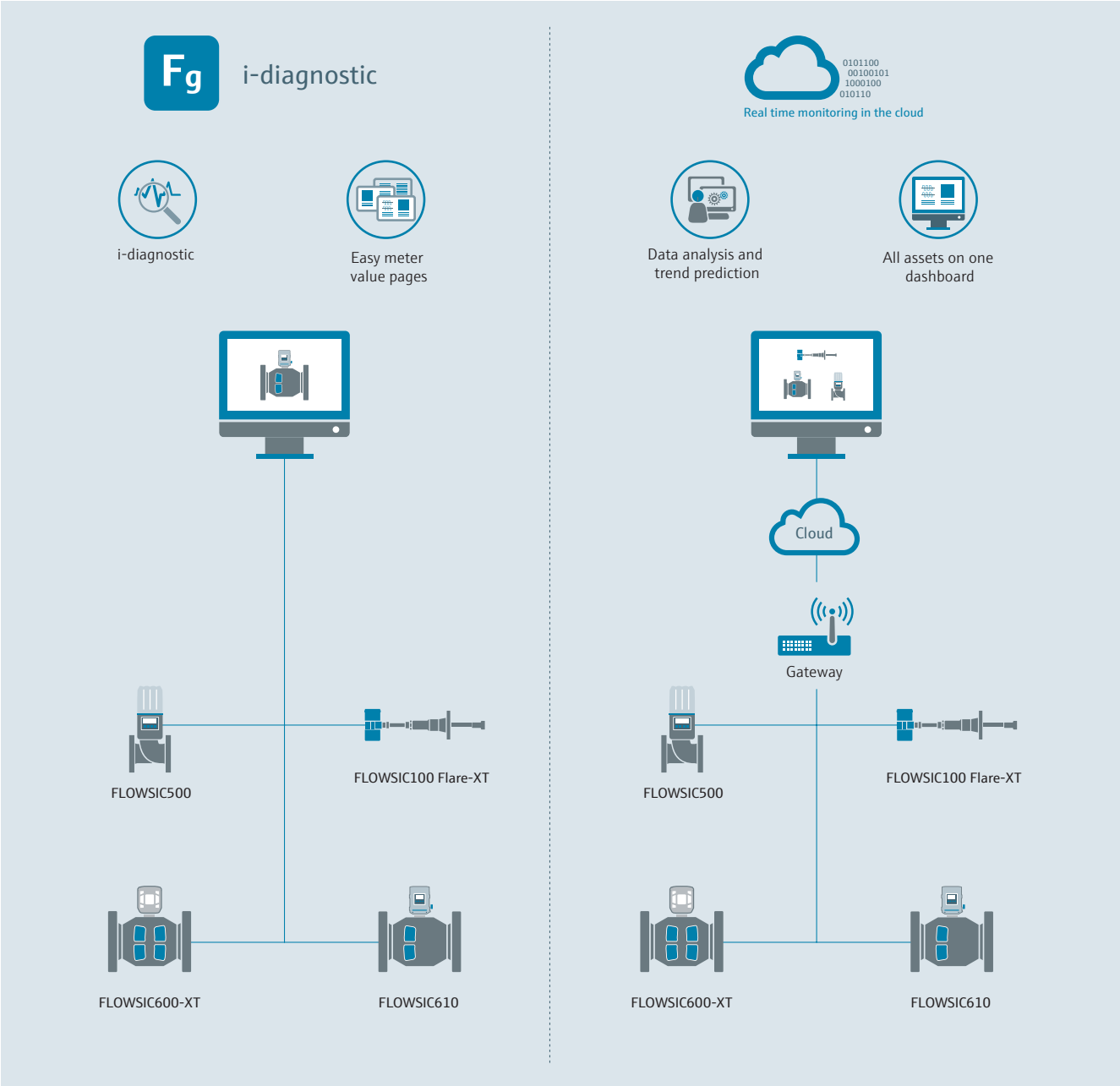

360° customer approach

Endress+Hauser pursues a solution-oriented 360° approach in order to provide customers with gas measurement solutions tailored to their individual requirements. Our customers benefit from detailed, personalized advice and flexibility throughout the entire project - from project planning to lifetime maintenance. Everything from a single source means improved schedules, lower costs and reduced risk.

Flow metering systems from Endress+Hauser are equipped with leading ultrasonic measurement technology and are provided as complete solutions that can be integrated into any plant. Our portfolio ranges from pre-feed to project execution: flow metering systems tailored to operators' needs and all from one supplier.



Design and Engineering:
The design is finalized down to the last detail, optimizing the commercial costs. This step requires a lot of experience and must be done with due diligence, since it determines whether or not the following steps go as planned.

Project Management:
The Endress+Hauser project manager works closely together with the customer's project manager to ensure the project runs smoothly, and all changes and challenges are made transparent to the customer.

Consultancy Feed:
Feed stands for: 'Front-End Engineering and Design'. This first step is absolutely crucial for flawless operation. Our highly skilled experts offer valuable consultation on the initial system design while taking into account any process challenges.

Manufacturing:
With Endress+Hauser as a partner from the start, everything comes together successfully at this stage. The project progresses on time, meeting the high-quality criteria of our customer as well as international regulations such as ISO, DIN, ANSI, and ASME certificates.

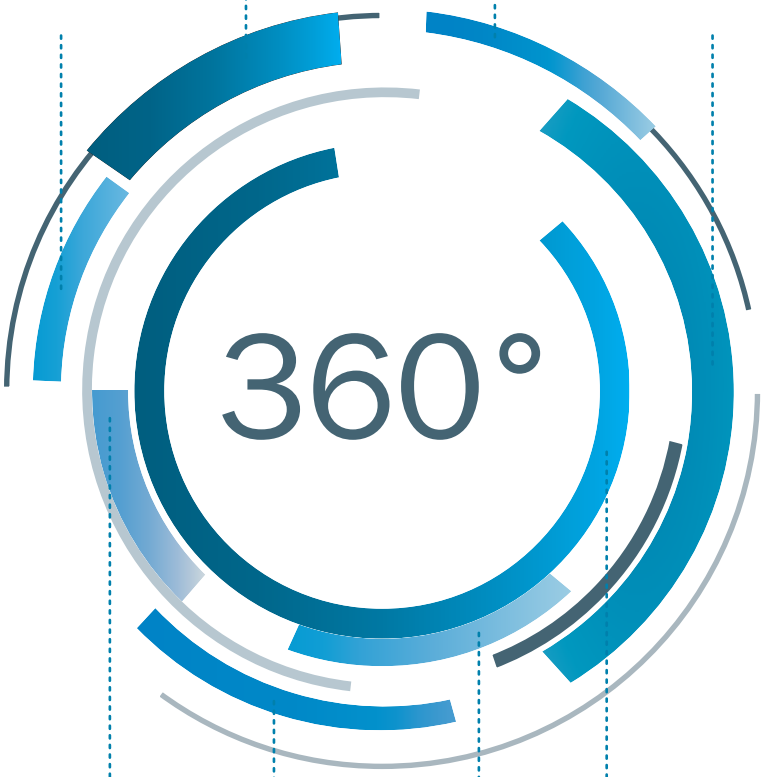

Training and Lifetime Services:
Should any issues arise with the installed system at any point in its lifecycle, our dedicated experts will provide timely technical support. Endress+Hauser also offers comprehensive service training, enabling system operators to diagnose and maintain all system components.

Calibration and Integrated Tests (FAT/SAT):
When calibrated, the system is certified for custody transfer applications and complies with regulations that require low uncertainty. The customer can now inspect the system's performance during a factory/site acceptance test.

Shipping and Packaging:
Endress+Hauser packages the system according to customer specifications — presenting photographic proof of having done so — and sends it on its way.

Start-up and Commissioning:
After installation, Endress+Hauser offers support to help with the start-up and commissioning process to ensure the system runs smoothly. This includes the identification of potential challenges that may arise from the specific conditions at the customer's site.

Technical data

The exact device specification and performance data of the product may deviate and depends on the respective application and customer specification.

Technical data

Measured values	Volumetric flow a. c., volume a. c., gas velocity, speed of sound, hydrogen purity (optional)
Measuring medium	Hydrogen with purity >95% / Hydrogen with purity >90% (on request)
Meter sizes	DN50 ... DN400 (2" ... 16")
Flow rates	5 (DN50) ... 25,000 (DN400) m³/h (180 (DN50) ... 880,000 (DN400) ft³/h)
Number of measuring paths	4 paths
Typical uncertainty[1] in the range Q_t ... Q_{max}	≤ ±0.5% (dry calibrated) ≤ ±0.2% After flow calibration and adjustment with constant factor. Without uncertainty of the flow test facility. ≤ ±0.1% After flow calibration and adjustment using polynomial or piecewise correction. Without uncertainty of the flow test facility.
Min. piping requirements	≥DN100 - straight inlet section ≥10DN or ≥2DN+FC+3DN, outlet section ≥3DN DN50, DN80 - straight inlet section ≥5DN/FC/10DN, outlet section ≥3DN
Operating pressure	Standard: 15...102.1 bar(g) (217...1,480 psi(g)) Optional: 7...102.1 bar(g) (102...1,480 psi(g)) Others on request
Operating temperature	-40...+60 °C (-40...+140 °F) / On request: -40...+85 °C (-40...+185 °F)
Ambient temperature[2]	-40...+60 °C (-40...+140 °F)
Ex approvals	ATEX: II 2(1) G Ex db ia [ia Ga] IIC T4 Gb IECEx: Ex db ia [ia Ga] IIC T4 Gb
Enclosure rating	IP66 / IP67
Digital outputs	4pcs, with 2 adjustable as frequency output (10 kHz max) Open collector or NAMUR
Interfaces	2x RS-485: Modbus RTU/ ASCII Service interface: 1x Bluetooth or 1x Wired Optionally: AO Hart 7, Ethernet and 3rd RS-485 follow soon (Q4/2026)
Power supply	24 VDC (+20/-15%)
Integrated components	Integrated p&T sensor for automatic geometry and Reynolds numbers correction (option)

[1] Under reference flow conditions

[2] The maximum ambient temperature is limited to 55 °C (131 °F) for MID devices

Flow rate

DN (inch)	Q_{min} (m³/h [ft³/h])	Q_{max} (m³/h [ft³/h])	DN (inch)	Q_{min} (m³/h [ft³/h])	Q_{max} (m³/h [ft³/h])
2"	5 (180)	400 (14,100)	8"	40 (1,410)	6,500 (230,000)
3"	8 (285)	1,000 (35,500)	10"	65 (2,300)	10,000 (355,000)
4"	13 (460)	1,600 (56,500)	12"	100 (3,500)	16,000 (565,000)
6"	32 (1,130)	4,000 (142,000)	16"	160 (5,650)	25,000 (880,000)

Given flow rate table valid for the meters with min. operating pressure 15 bar(g). For further information for instance Q_t values or flow rate in case of extended pressure range option (min. pressure 7bar(g)) see operation instruction.

Dimensional drawings

Dimensions and weights for the most common device variants presented below. More variants available in Operation instruction. 2 and 3 inch meter body may differ to the examples below.

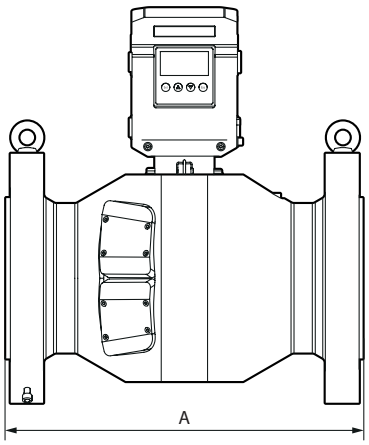

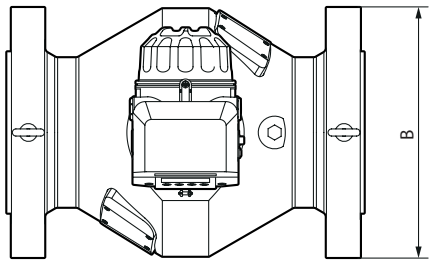

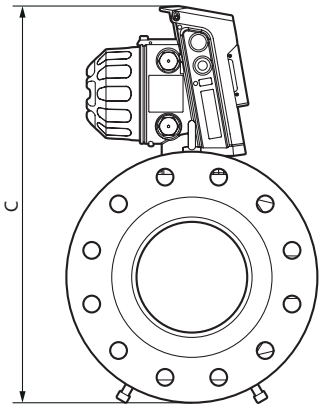

Nominal pipe size / Nominal length	Norm	Connection flange	Weight		Dimensions					
					A		B		C	
			kg	lbs	mm	inch	mm	inch	mm	inch
2" / 5D	ANSI B16.5	cl300	40	88	250	9.8	165	7	445	17.5
		cl600								
3" / 4D		cl300	62	137	320	12.6	210	8	518	20.3
		cl600								
4" / 3D		cl300	87	192	300	11.8	254	10	527	20.7
		cl600					273	11	537	21.1
6" / 3D		cl300	146	322	450	17.7	317	12	585	23.0
		cl600	174	384			356	14	605	23.8
8" / 3D		cl300	295	650	600	23.6	381	15	653	25.7
		cl600					420	16	672	26.4
10" / 3D		cl300	382	842	750	29.5	445	17	725	28.5
		cl600	478	1054			508	20	756	29.7
12" / 3D		cl300	486	1071	900	35.4	521	20	773	30.4
		cl600	572	1261			560	22	795	31.3
14" / 3D		cl300	651	1435	1050	41.3	585	23	777	30.6
		cl600	715	1576			605	24	787	31.0
16" / SD		cl300	810	1786	762	30	648	25	888	34.9
		cl600					686	27	907	35.7

Mounting instructions

Installation of the FLOWSIC610 in the pipeline for unidirectional and bidirectional use (minimum requirements)

Unidirectional

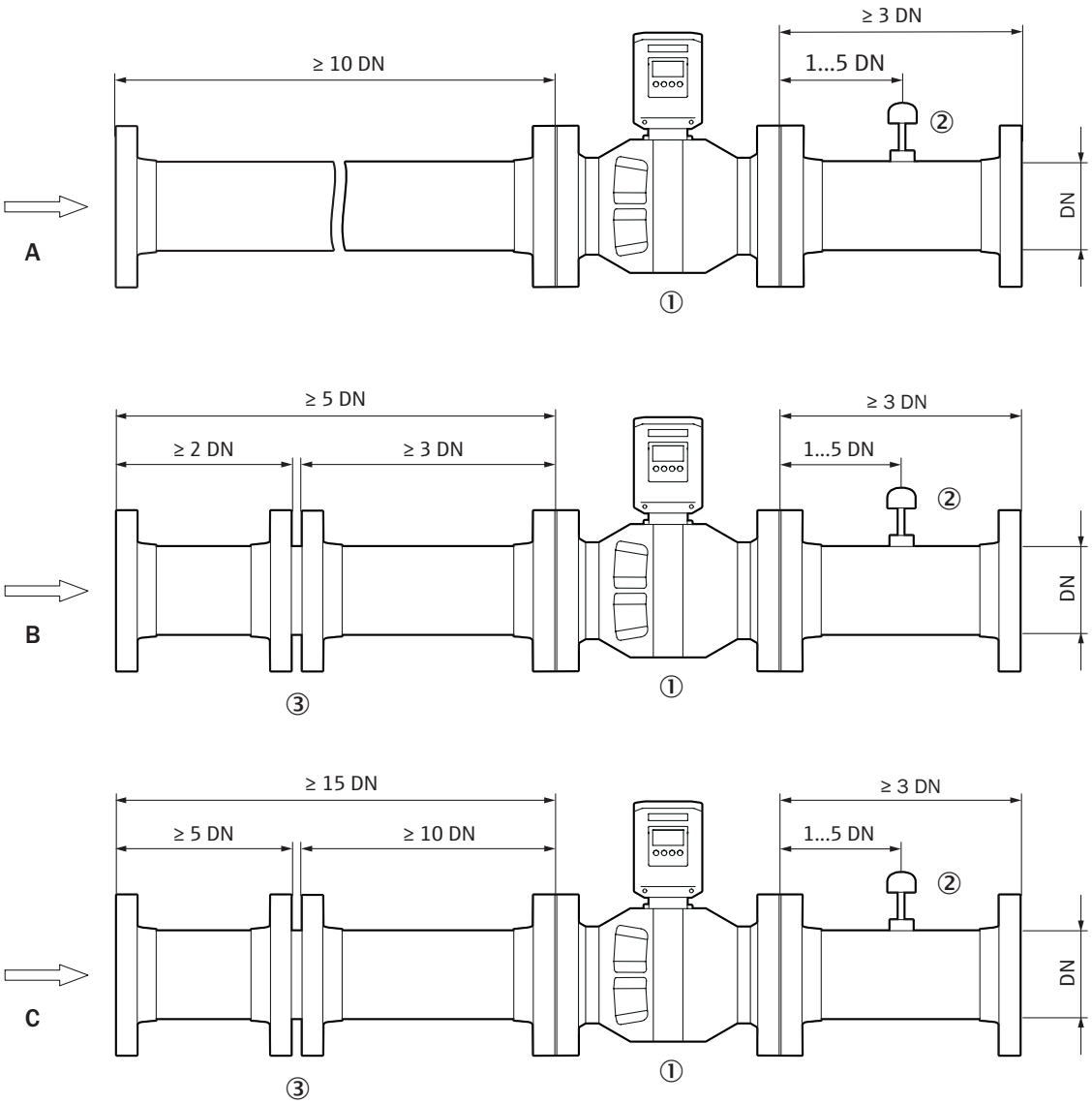

1 FLOWSIC610
2 Temperature measuring point
3 Flow conditioner

Variants	Meter size	Metrological standard	Inlet	Outlet
A	≥DN100	OIML R 137, Class 1	≥10DN	≥3DN
B	≥DN100		≥2DN+FC+3DN	≥3DN
C	DN50, DN80		≥5DN+FC+10DN	≥3DN

Bidirectional

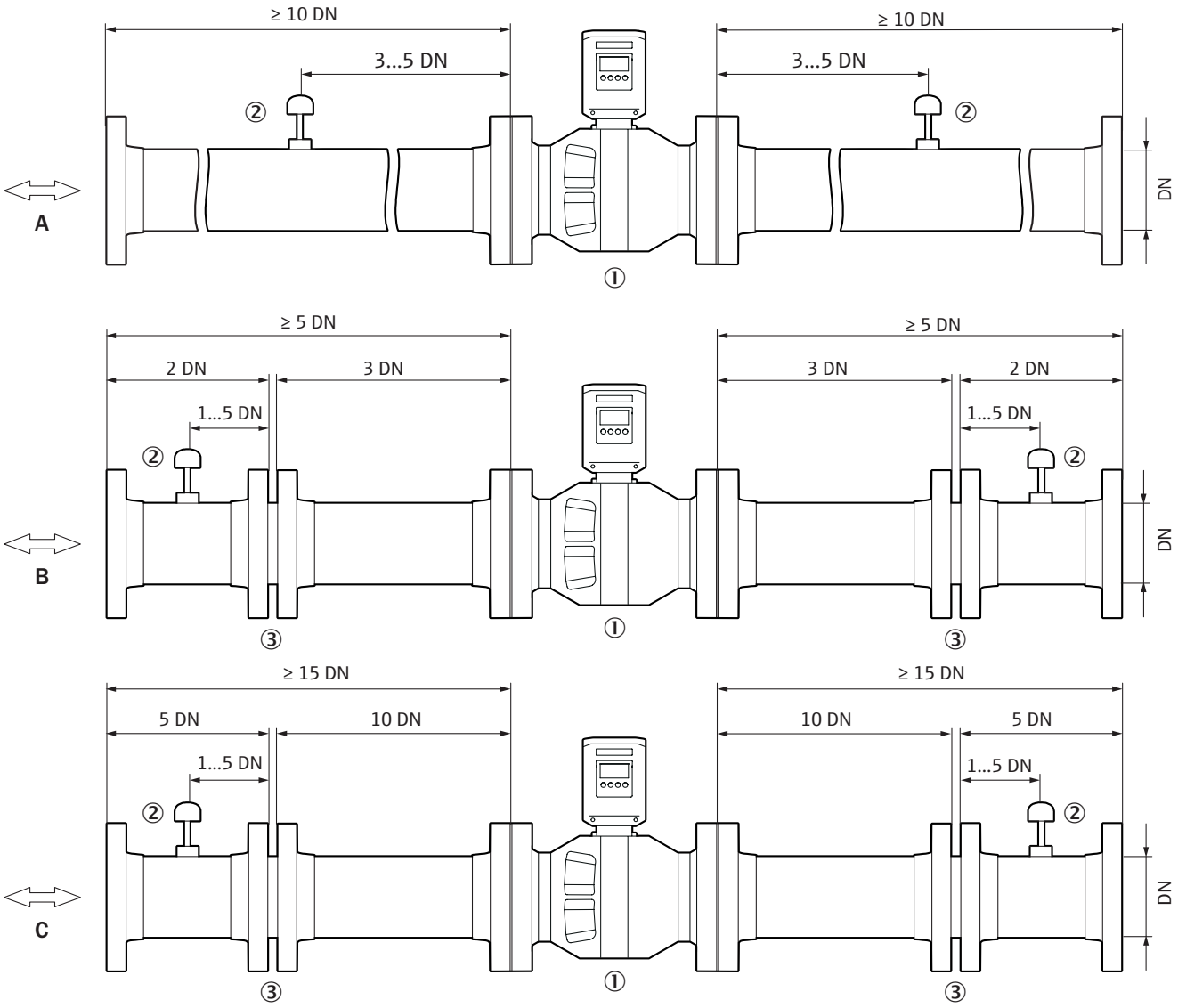

1 FLOWSIC610
2 Temperature measuring point
3 Flow conditioner

Variants	Meter size	Metrological standard	Inlet	Outlet
A	≥DN100	OIML R 137, Class 1	≥10DN	≥10DN
B	≥DN100		≥2DN+FC+3DN	≥3DN+FC+2DN
C	DN50, DN80		≥5DN+FC+10DN	≥10DN+FC+5DN

Headquarters

Endress+Hauser
International AG
Kägenstrasse 2
4153 Reinach
Switzerland

Tel +41 61 715 8100
Fax +41 61 715 2500
info@ii.endress.com
www.ii.endress.com

IN01471D/90/EN/02.26-00
(8030426 / EN / V1-1)

Endress+Hauser

People for Process Automation