TI01692T/09/EN/02.26-00
71766719
2026-02-16

Technical Information
iTEMP TMT182B

Temperature transmitter



HART® temperature head transmitter with one universal sensor input suitable for use in hazardous areas

Application

- Temperature transmitter with HART® communication for the conversion of various input signals into a scalable, analog 4-20 mA output signal
- Reliability, long-term stability, high precision and advanced diagnostic function for reliable operation
- Universal input for resistance thermometers (RTD), thermocouples (TC), resistance transmitters (Ω), voltage transmitters (mV)
- Installation in terminal head, form B (flat face)

Your benefits

- Safe operation in hazardous areas thanks to international approvals
- Reliable operation thanks to sensor and device monitoring
- Diagnostic information according to NAMUR NE 107
- Ready to use: preprogrammed ex works if required
- Easy configuration thanks to free software

Endress+Hauser
People for Process Automation

Table of contents

Function and system design 3
Measuring principle 3
Measuring system 3

Input 4
Measured variable 4
Measuring range 4

Output 5
Output signal 5
Failure information 5
Load 5
Linearization/transmission behavior 5
Filters 5
Protocol-specific data 5
Write protection for device parameters 6
Switch-on delay 6

Power supply 6
Supply voltage 6
Current consumption 6
Electrical connection 6
Terminals 6

Performance characteristics 7
Response time 7
Update time 7
Reference operating conditions 7
Maximum measurement error 7
Sensor adjustment 9
Current output adjustment 10
Operating influences 10
Influence of the reference junction 12

Installation 13
Mounting location 13
Orientation 13

Environment 13
Ambient temperature 13
Storage temperature 13
Operating height 13
Humidity 13
Climate class 13
Degree of protection 13
Shock and vibration resistance 13
Electromagnetic compatibility (EMC) 14
Insulation class 14
Overvoltage category 14
Pollution level 14

Mechanical construction 14
Design and dimensions 14
Weight 14
Materials 14

Operability 14
Remote operation 14

Certificates and approvals 15
HART® certification 15
MTTF 15

Ordering information 15

Accessories 15
Device-specific accessories 15
Communication-specific accessories 16
Service-specific accessories 16
Online tools 16
System components 16

Documentation 17

Function and system design

Measuring principle

Electronic recording and conversion of various input signals in industrial temperature measurement.

Measuring system

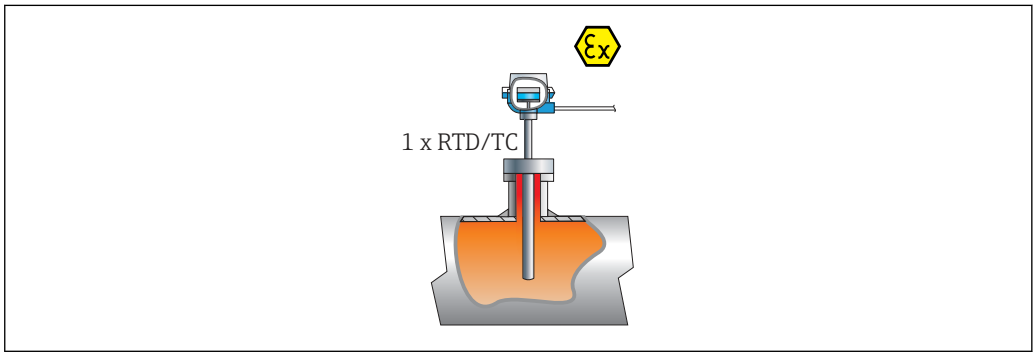

1 *Application example: installed head transmitter - 1 x RTD/TC, directly wired*

Endress+Hauser offers a comprehensive range of industrial thermometers with resistance sensors or thermocouples.

When combined with the temperature transmitter, these components form a complete measuring point for a wide range of applications in the industrial sector.

The temperature transmitter is a 2-wire device with one measuring input and one analog output. The device not only transmits converted signals from resistance thermometers and thermocouples, it also transmits resistance and voltage signals using HART® communication and as a 4 to 20 mA current signal. It can be installed as an intrinsically safe electrical apparatus in hazardous areas and is used for instrumentation in a form B (flat face) terminal head as per DIN EN 50446.

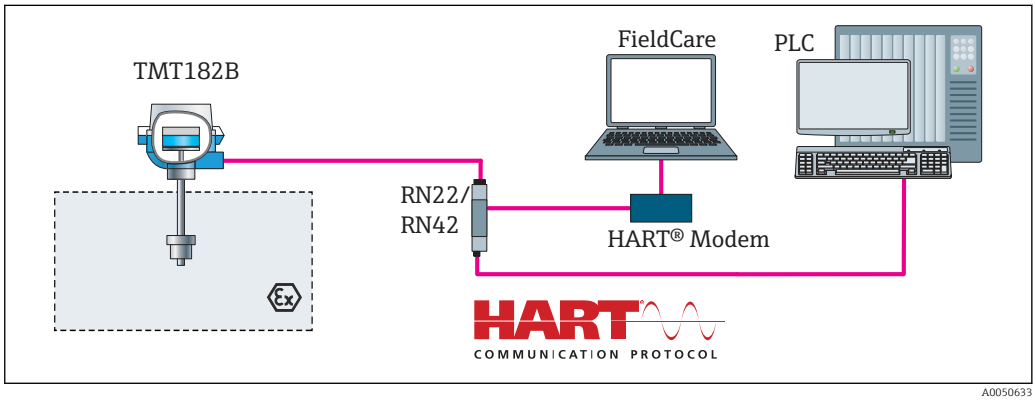

2 *Device architecture for HART® communication*

Standard diagnostic functions

- Cable open-circuit, short-circuit of sensor wires
- Incorrect wiring
- Internal device errors
- Overrange/underrange detection
- Device temperature overrange/underrange detection

Low voltage detection

The low voltage detection function prevents the device from continuously transmitting an incorrect analog output value (caused by an incorrect or damaged power supply system or a damaged signal cable). If the supply voltage drops below the required value, the analog output value drops to < 3.6 mA for approx. 5 s. The device then tries to output the normal analog output value again. If the supply voltage is still too low, this process is repeated cyclically.

Input

Measured variable Temperature (temperature-linear transmission behavior), resistance and voltage.

Resistance thermometer (RTD) as per standard	Designation	α	Measuring range limits	Min. span
IEC 60751:2022	Pt100 (1) Pt200 (2) Pt500 (3) Pt1000 (4)	0.003851	−200 to 850 °C (−328 to 1 562 °F) −200 to 850 °C (−328 to 1 562 °F) −200 to 500 °C (−328 to 932 °F) −200 to 250 °C (−328 to 482 °F)	10 K (18 °F)
JIS C1604:1984	Pt100 (5)	0.003916	−200 to 510 °C (−328 to 950 °F)	10 K (18 °F)
DIN 43760 IPTS-68	Ni100 (6) Ni120 (7)	0.006180	−60 to 250 °C (−76 to 482 °F) −60 to 250 °C (−76 to 482 °F)	10 K (18 °F)
GOST 6651-94	Pt50 (8) Pt100 (9)	0.003910	−185 to 1 100 °C (−301 to 2 012 °F) −200 to 850 °C (−328 to 1 562 °F)	10 K (18 °F)
OIML R84: 2003, GOST 6651-2009	Cu50 (10) Cu100 (11)	0.004280	−180 to 200 °C (−292 to 392 °F) −180 to 200 °C (−292 to 392 °F)	10 K (18 °F)
	Ni100 (12) Ni120 (13)	0.006170	−60 to 180 °C (−76 to 356 °F) −60 to 180 °C (−76 to 356 °F)	10 K (18 °F)
OIML R84: 2003, GOST 6651-94	Cu50 (14)	0.004260	−50 to 200 °C (−58 to 392 °F)	10 K (18 °F)
-	Pt100 (Callendar Van Dusen) Nickel polynomial Copper polynomial	-	The measuring range limits are specified by entering the limit values that depend on the coefficients A to C and R0.	10 K (18 °F)
	▪ Connection type: 2-wire, 3-wire or 4-wire connection, sensor current: ≤ 0.3 mA ▪ With 2-wire circuit, compensation of wire resistance possible (0 to 30 Ω) ▪ With 3-wire and 4-wire connection, sensor wire resistance up to max. 50 Ω per wire			
Resistance transmitter	Resistance Ω		10 to 400 Ω 10 to 2 000 Ω	10 Ω 10 Ω

Thermocouples as per standard	Designation	Measuring range limits		Min. span
			Recommended temperature range:	
IEC 60584, Part 1 ASTM E230-3	Type A (W5Re-W20Re) (30) Type B (PtRh30-PtRh6) (31) Type E (NiCr-CuNi) (34) Type J (Fe-CuNi) (35) Type K (NiCr-Ni) (36) Type N (NiCrSi-NiSi) (37) Type R (PtRh13-Pt) (38) Type S (PtRh10-Pt) (39) Type T (Cu-CuNi) (40)	0 to 2 500 °C (32 to 4 532 °F) 40 to 1 820 °C (104 to 3 308 °F) −250 to 1 000 °C (−482 to 1 832 °F) −210 to 1 200 °C (−346 to 2 192 °F) −270 to 1 372 °C (−454 to 2 501 °F) −270 to 1 300 °C (−454 to 2 372 °F) −50 to 1 768 °C (−58 to 3 214 °F) −50 to 1 768 °C (−58 to 3 214 °F) −200 to 400 °C (−328 to 752 °F)	0 to 2 500 °C (32 to 4 532 °F) 500 to 1 820 °C (932 to 3 308 °F) −150 to 1 000 °C (−238 to 1 832 °F) −150 to 1 200 °C (−238 to 2 192 °F) −150 to 1 200 °C (−238 to 2 192 °F) −150 to 1 300 °C (−238 to 2 372 °F) 200 to 1 768 °C (392 to 3 214 °F) 200 to 1 768 °C (392 to 3 214 °F) −150 to 400 °C (−238 to 752 °F)	50 K (90 °F) 50 K (90 °F) 50 K (90 °F) 50 K (90 °F) 50 K (90 °F) 50 K (90 °F) 50 K (90 °F) 50 K (90 °F) 50 K (90 °F)
IEC 60584, Part 1 ASTM E230-3 ASTM E988-96	Type C (W5Re-W26Re) (32)	0 to 2 315 °C (32 to 4 199 °F)	0 to 2 000 °C (32 to 3 632 °F)	50 K (90 °F)
ASTM E988-96	Type D (W3Re-W25Re) (33)	0 to 2 315 °C (32 to 4 199 °F)	0 to 2 000 °C (32 to 3 632 °F)	50 K (90 °F)
DIN 43710	Type L (Fe-CuNi) (41) Type U (Cu-CuNi) (42)	−200 to 900 °C (−328 to 1 652 °F) −200 to 600 °C (−328 to 1 112 °F)	−150 to 900 °C (−238 to 1 652 °F) −150 to 600 °C (−238 to 1 112 °F)	50 K (90 °F)
GOST R8.585-2001	Type L (NiCr-CuNi) (43)	−200 to 800 °C (−328 to 1 472 °F)	−200 to 800 °C (328 to 1 472 °F)	50 K (90 °F)
	▪ Internal reference junction (Pt100) ▪ External preset value: configurable value −40 to 85 °C (−40 to 185 °F) ▪ Maximum sensor wire resistance 10 kΩ			
Voltage transmitter (mV)	Millivolt transmitter (mV)	−20 to 100 mV		5 mV

Output

Output signal

Analog output	4 to 20 mA, 20 to 4 mA (can be inverted)
Signal encoding	FSK ±0.5 mA via current signal
Data transmission rate	1200 baud
Galvanic isolation	U = 2 kV AC for 1 minute (input/output)

Failure information

Failure information as per NAMUR NE 43:

Failure information is created if the measuring information is missing or not valid. A complete list of all the faults occurring in the measuring system is created.

Underranging	Linear decrease from 4.0 to 3.8 mA
Overranging	Linear increase from 20.0 to 20.5 mA
Failure e.g., sensor failure; sensor short-circuit	≤ 3.6 mA ("low") or ≥ 21 mA ("high"), can be selected

Load

$R_{b\,max.}$= ($U_{b\,max.}$ - 10 V) / 0.023 A (current output). Valid for head transmitter

Load in Ohm
U_b = supply voltage in V DC

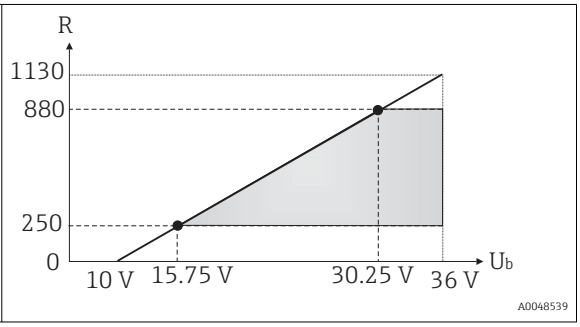

Linearization/transmission behavior

Temperature-linear, resistance-linear, voltage-linear

Filters

1st order digital filter: 0 to 120 s

Protocol-specific data

Manufacturer ID	17 (0x11)
Device type code	0x11D2
HART® specification	7
Device address in multi-drop mode	Software setting addresses 0 to 63
Device description files (DTM, DD)	Information and files available at: www.endress.com www.fieldcommgroup.org
HART load	Min. 250 Ω
HART device variables	**Measured value for primary value (PV)** Sensor (measured value) **Measured values for SV, TV, QV (secondary, tertiary and quaternary variable)** ▪ SV: device temperature ▪ TV: sensor (measured value) ▪ QV: sensor (measured value)
Supported functions	Condensed status

Wireless HART data

Minimum starting voltage	10 V_{DC}
Starting current	3.58 mA
Starting time	7 s

Minimum operating voltage	10 V_{DC}
Multidrop current	4.0 mA
Time for connection setup	9 s

Write protection for device parameters

Software: user role-based concept (password assignment)

Switch-on delay

≤ 7 s until the first valid measured value signal is present at the current output and until the start of HART® communication. While switch-on delay = I_a ≤ 3.8 mA

Power supply

Supply voltage

Values for non-hazardous areas, protected against polarity reversal:
U = 10 to 36 V_{DC}

Values for hazardous area, see Ex documentation.

Current consumption

- 3.6 to 23 mA
- Minimum current consumption 3.5 mA
- Current limit ≤ 23 mA

Electrical connection

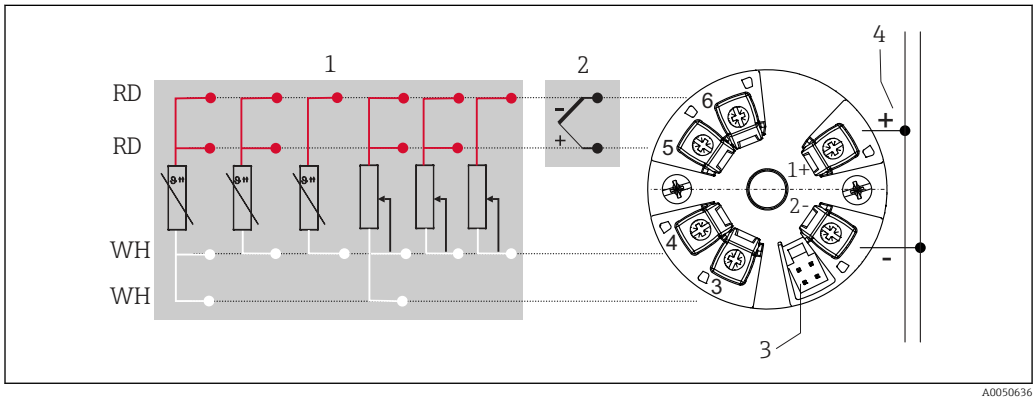

3 Assignment of terminal connections for head transmitter

1 Sensor input, RTD and Ω, 4-, 3- and 2-wire
2 Sensor input, TC and mV
3 CDI interface
4 Bus terminator and power supply

Terminals

Terminal design	Cable design	Cable cross-section
Screw terminals	Rigid or flexible	≤ 1.5 mm² (16 AWG)

Performance characteristics

Response time

Resistance thermometer (RTD) and resistance transmitter (Ω measurement)	≤ 1 s
Thermocouples (TC) and voltage transmitters (mV)	≤ 1 s
Reference temperature	≤ 1 s

When recording step responses, it must be taken into account that the times of the internal reference measuring point are added to the specified times where applicable.

Update time

Approx. 100 ms

Reference operating conditions

- Calibration temperature: +25 °C ±3 K (77 °F ±5.4 °F)
- Supply voltage: 24 V DC
- 4-wire circuit for resistance adjustment

Maximum measurement error

In accordance with EN IEC 62828 and the reference operating conditions specified above. The measurement error data corresponds to ±2 σ (Gaussian distribution). The data includes non-linearities and repeatability.

MV = measured value

LRV = lower range value of the sensor in question

Typically

Standard	Designation	Measuring range	Typical measurement error (±)	
Resistance thermometer (RTD) as per standard			Digital value [1]	Value at current output
IEC 60751:2008	Pt100 (1)	0 to 200 °C (32 to 392 °F)	0.1 °C (0.18 °F)	0.12 °C (0.22 °F)
IEC 60751:2008	Pt1000 (4)		0.09 °C (0.16 °F)	0.11 °C (0.20 °F)
GOST 6651-94	Pt100 (9)		0.10 °C (0.18 °F)	0.12 °C (0.22 °F)
Thermocouples (TC) as per standard			Digital value [1]	Value at current output
IEC 60584, Part 1	Type K (NiCr-Ni) (36)	0 to 800 °C (32 to 1472 °F)	0.65 °C (1.17 °F)	0.69 °C (1.24 °F)
IEC 60584, Part 1	Type S (PtRh10-Pt) (39)		1.50 °C (2.70 °F)	1.52 °C (2.74 °F)
GOST R8.585-2001	Type L (NiCr-CuNi) (43)		2.60 °C (4.68 °F)	2.61 °C (4.70 °F)

1) Measured value transmitted via HART®.

Measurement error for resistance thermometers (RTD) and resistance transmitters

Standard	Designation	Measuring range	Measurement error (±)	
			Digital [1]	**D/A** [2]
			Based on measured value [3]	
IEC 60751:2008	Pt100 (1)	−200 to 850 °C (−328 to 1562 °F)	ME = ± (0.08 °C (0.14 °F) + 0.006% * (MV - LRV))	0.03 % (≙ 4.8 µA)
	Pt200 (2)		ME = ± (0.2 °C (0.36 °F) + 0.011% * (MV - LRV))	
	Pt500 (3)	−200 to 510 °C (−328 to 950 °F)	ME = ± (0.1 °C (0.18 °F) + 0.008% * (MV - LRV))	
	Pt1000 (4)	−200 to 250 °C (−328 to 482 °F)	ME = ± (0.06 °C (0.11 °F) + 0.007% * (MV - LRV))	
JIS C1604:1984	Pt100 (5)	−200 to 510 °C (−328 to 950 °F)	ME = ± (0.08 °C (0.14 °F) + 0.006% * (MV - LRV))	
GOST 6651-94	Pt50 (8)	−185 to 1100 °C (−301 to 2012 °F)	ME = ± (0.13 °C (0.23 °F) + 0.008% * (MV - LRV))	
	Pt100 (9)	−200 to 850 °C (−328 to 1562 °F)	ME = ± (0.08 °C (0.14 °F) + 0.0055% * (MV - LRV))	0.03 % (≙ 4.8 µA)
DIN 43760 IPTS-68	Ni100 (6)	−60 to 250 °C (−76 to 482 °F)	ME = ± (0.08 °C (0.14 °F) - 0.004% * (MV - LRV))	

Standard	Designation	Measuring range	Measurement error (±)	
			Digital [1]	D/A [2]
	Ni120 (7)			
OIML R84: 2003 / GOST 6651-2009	Cu50 (10)	−180 to 200 °C (−292 to 392 °F)	ME = ± (0.12 °C (0.22 °F) + 0.006% * (MV - LRV))	
	Cu100 (11)	−180 to 200 °C (−292 to 392 °F)	ME = ± (0.08 °C (0.14 °F) + 0.003% * (MV - LRV))	
	Ni100 (12)	−60 to 180 °C (−76 to 356 °F)	ME = ± (0.08 °C (0.14 °F) - 0.004% * (MV - LRV))	
	Ni120 (13)			
OIML R84: 2003, GOST 6651-94	Cu50 (14)	−50 to 200 °C (−58 to 392 °F)	ME = ± (0.12 °C (0.22 °F) + 0.004% * (MV - LRV))	
Resistance transmitter	Resistance Ω	10 to 400 Ω	ME = ± 25 mΩ + 0.0032 % * MV	0.03 % (≙ 4.8 µA)
		10 to 2 850 Ω	ME = ± 120 mΩ + 0.006 % * MV	

1) Measured value transmitted via HART®.
2) Percentages based on the configured measuring span of the analog output signal.
3) Deviations from maximum measurement error possible due to rounding.

Measurement error for thermocouples (TC) and voltage transmitters

Standard	Designation	Measuring range	Measurement error (±)	
			Digital [1]	D/A [2]
			Based on measured value [3]	
IEC 60584-1 ASTM E230-3	Type A (30)	0 to 2 500 °C (32 to 4 532 °F)	ME = ± (1.25 °C (2.25 °F) + 0.026% * (MV - LRV))	0.03 % (≙ 4.8 µA)
	Type B (31)	500 to 1 820 °C (932 to 3 308 °F)	ME = ± (2.25 °C (4.05 °F) - 0.09% * (MV - LRV))	
IEC 60584-1 ASTM E230-3 ASTM E988-96	Type C (32)	0 to 2 000 °C (32 to 3 632 °F)	ME = ± (1.15 °C (2.07 °F) + 0.0055% * (MV - LRV))	
ASTM E988-96	Type D (33)		ME = ± (1.25 °C (2.25 °F) - 0.016% * (MV - LRV))	
IEC 60584-1 ASTM E230-3	Type E (34)	−150 to 1 000 °C (−238 to 1 832 °F)	ME = ± (0.4 °C (0.72 °F) - 0.008% * (MV - LRV))	
	Type J (35)	−150 to 1 200 °C (−238 to 2 192 °F)	ME = ± (0.45 °C (0.81 °F) - 0.007% * (MV - LRV))	
	Type K (36)		ME = ± (0.6 °C (1.08 °F) - 0.01% * (MV - LRV))	
	Type N (37)	−150 to 1 300 °C (−238 to 2 372 °F)	ME = ± (0.8 °C (1.44 °F) - 0.025% * (MV - LRV))	0.03 % (≙ 4.8 µA)
	Type R (38)	200 to 1 768 °C (392 to 3 214 °F)	ME = ± (1.6 °C (2.88 °F) - 0.025% * (MV - LRV))	
	Type S (39)		ME = ± (1.6 °C (2.88 °F) - 0.025% * (MV - LRV))	
	Type T (40)	−150 to 400 °C (−238 to 752 °F)	ME = ± (0.5 °C (0.9 °F) - 0.05% * (MV - LRV))	
DIN 43710	Type L (41)	−150 to 900 °C (−238 to 1 652 °F)	ME = ± (0.5 °C (0.9 °F) - 0.016% * (MV - LRV))	
	Type U (42)	−150 to 600 °C (−238 to 1 112 °F)	ME = ± (0.55 °C (0.99 °F) - 0.04% * (MV - LRV))	
GOST R8.585-2001	Type L (43)	−200 to 800 °C (−328 to 1 472 °F)	ME = ± (2.45 °C (4.41 °F) - 0.015% * (MV - LRV))	
Voltage transmitter (mV)		−20 to +100 mV	ME = ± 10.0 µV	4.8 µA

1) Measured value transmitted via HART®.
2) Percentages based on the configured span of the analog output signal.
3) Deviations from maximum measurement error possible due to rounding.

Total measurement error of transmitter at current output = √(Measurement error digital² + Measurement error D/A²)

Sample calculation with Pt100, measuring range 0 to 200 °C (32 to 392 °F), ambient temperature +25 °C (+77 °F), supply voltage 24 V:

Measurement error digital = 0.08 °C + 0.006% x (200 °C - (-200 °C)):	0.1 °C (0.18 °F)
Measurement error D/A = 0.003 % x 200 °C (360 °F)	0.06 °C (0.11 °F)
Measurement error digital value (HART):	0.1 °C (0.18 °F)
Measurement error analog value (current output): √(measurement error digital² + measurement error D/A²)	0.12 °C (0.22 °F)

Sample calculation with Pt100, measuring range 0 to 200 °C (32 to 392 °F), ambient temperature +35 °C (+95 °F), supply voltage 30 V:

Measurement error digital = 0.08 °C + 0.006% x (200 °C - (-200 °C)):	0.1 °C (0.18 °F)
Measurement error D/A = 0.03 % x 200 °C (360 °F)	0.06 °C (0.108 °F)
Influence of ambient temperature (digital) = (35 - 25) x (0.0017 % x 200 °C - (-200 °C)), min. 0.003 °C	0.07 °C (0.13 °F)
Influence of ambient temperature (D/A) = (35 - 25) x (0.003% x 200 °C)	0.06 °C (0.108 °F)
Influence of supply voltage (digital) = (30 - 24) x (0.01% x 200 °C - (-200 °C)), min. 0.005 °C	0.02 °C (0.036 °F)
Influence of supply voltage (D/A) = (30 - 24) x (0.003% x 200 °C)	0.04 °C (0.72 °F)
Measurement error digital value (HART): √(Measurement error digital² + Influence of ambient temperature (digital)² + Influence of supply voltage (digital)²	**0.12 °C (0.22 °F)**
Measurement error analog value (current output): √(Measurement error digital² + Measurement error D/A² + Influence of ambient temperature (digital)² + Influence of ambient temperature (D/A)² + Influence of supply voltage (digital)² + Influence of supply voltage (D/A)²	**0.15 °C (0.27 °F)**

Sensor adjustment

Sensor-transmitter-matching

RTD sensors are one of the most linear temperature measuring elements. Nevertheless, the output must be linearized. To significantly improve temperature measurement accuracy, the device allows the use of two methods:

- Callendar Van Dusen coefficient (Pt100 resistance thermometer)
  The Callendar Van Dusen equation is described as:
  $R_T = R_0[1+AT+BT^2+C(T-100)T^3]$

  The coefficients A, B and C are used to match the sensor (platinum) and transmitter in order to improve the accuracy of the measuring system. The coefficients for a standard sensor are specified in IEC 60751. If no standard sensor is available or if greater accuracy is required, the coefficients for each sensor can be determined specifically with the aid of sensor calibration.

- Linearization for copper/nickel resistance thermometers (RTD)
  The polynomial equation for copper/nickel is as follows:
  $R_T = R_0(1+AT+BT^2)$

  The coefficients A and B are used for the linearization of nickel or copper resistance thermometers (RTD). The exact values of the coefficients derive from the calibration data and are specific to each sensor. The sensor-specific coefficients are then sent to the transmitter.

Sensor-transmitter matching using one of the methods mentioned above significantly improves the temperature measurement accuracy of the entire system. This is because the transmitter uses the specific data pertaining to the connected sensor to calculate the measured temperature, instead of using the standardized sensor curve data.

1-point adjustment (offset)

Shifts the sensor value

Current output adjustment Correction of the 4 or 20 mA current output value.

Operating influences The measurement error data correspond to 2 σ (Gaussian distribution).

Influence of ambient temperature and supply voltage on operation for resistance thermometers (RTD) and resistance transmitters

Designation	Standard	Ambient temperature: Influence (±) per 1 °C (1.8 °F) change		Supply voltage: Influence (±) per V change	
		Digital [1]	D/A [2]	Digital [1]	D/A [2]
		Based on measured value		Based on measured value	
Pt100 (1)	IEC 60751:2008	0.0015% * (MV - LRV), at least 0.003 °C (0.005 °F)	0.003 %	0.001% * (MV - LRV), at least 0.002 °C (0.004 °F)	0.003 %
Pt200 (2)		at least 0.014 °C (0.025 °F)		at least 0.008 °C (0.014 °F)	
Pt500 (3)		0.0015% * (MV - LRV), at least 0.006 °C (0.011 °F)		0.0009% * (MV - LRV), at least 0.003 °C (0.005 °F)	
Pt1000 (4)		at least 0.003 °C (0.005 °F)		at least 0.002 °C (0.004 °F)	
Pt100 (5)	JIS C1604:1984	0.0017% * (MV - LRV), at least 0.003 °C (0.005 °F)		0.0009% * (MV - LRV), at least 0.002 °C (0.004 °F)	
Pt50 (8)	GOST 6651-94	0.0017% * (MV - LRV), at least 0.006 °C (0.011 °F)		0.0011% * (MV - LRV), at least 0.003 °C (0.005 °F)	
Pt100 (9)		0.0015% * (MV - LRV), at least 0.003 °C (0.005 °F)		0.0009% * (MV - LRV), at least 0.002 °C (0.004 °F)	
Ni100 (6)	DIN 43760 IPTS-68	at least 0.002 °C (0.004 °F)	0.003 %	at least 0.001 °C (0.002 °F)	0.003 %
Ni120 (7)					
Cu50 (10)	OIML R84: 2003 / GOST 6651-2009	at least 0.005 °C (0.009 °F)		at least 0.003 °C (0.005 °F)	
Cu100 (11)		at least 0.003 °C (0.005 °F)		at least 0.002 °C (0.004 °F)	
Ni100 (12)					
Ni120 (13)		at least 0.002 °C (0.004 °F)		at least 0.001 °C (0.002 °F)	
Cu50 (14)	OIML R84: 2003 / GOST 6651-94	at least 0.006 °C (0.011 °F)		at least 0.003 °C (0.005 °F)	
Resistance transmitter (Ω)					
10 to 400 Ω		0.0012% * MV, at least 1 mΩ	0.003 %	0.0007% * MV, at least 1 mΩ	0.003 %
10 to 2 000 Ω		0.0013% * MV, at least 12 mΩ		0.0008% * MV, at least 7 mΩ	

1) Measured value transmitted via HART®.
2) Percentages based on the configured measuring span of the analog output signal

Influence of ambient temperature and supply voltage on operation for thermocouples (TC) and voltage transmitters

Designation	Standard	Ambient temperature: Influence (±) per 1 °C (1.8 °F) change		Supply voltage: Influence (±) per V change	
		Digital [1]	D/A [2]	Digital	D/A [2]
		Based on measured value		Based on measured value	
Type A (30)	IEC 60584-1 ASTM E230-3	0.0032% * (MV - LRV), at least 0.010 °C (0.018 °F)	0.003 %	0.0017% * (MV - LRV), at least 0.010 °C (0.018 °F)	0.003 %
Type B (31)		at least 0.020 °C (0.036 °F)		at least 0.010 °C (0.018 °F)	
Type C (32)	IEC 60584-1 ASTM E230-3 ASTM E988-96	0.0025% * (MV - LRV), at least 0.010 °C (0.018 °F)		0.0015% * (MV - LRV), at least 0.010 °C (0.018 °F)	
Type D (33)	ASTM E988-96	0.0023% * (MV - LRV), at least 0.010 °C (0.018 °F)		0.0013% * (MV - LRV)	

Designation	Standard	Ambient temperature: Influence (±) per 1 °C (1.8 °F) change		Supply voltage: Influence (±) per V change	
		Digital [1]	D/A [2]	Digital	D/A [2]
Type E (34)	IEC 60584-1 ASTM E230-3	0.0016% * (MV - LRV)		0.001% * (MV - LRV)	
Type J (35)		0.0018% * (MV - LRV)			
Type K (36)		0.0018% * (MV - LRV), at least 0.010 °C (0.018 °F)			
Type N (37)			0.003 %		0.003 %
Type R (38)		at least 0.020 °C (0.036 °F)		at least 0.010 °C (0.018 °F)	
Type S (39)					
Type T (40)		≤ 0.01 °C (0.018 °F)		≤ 0.01 °C (0.018 °F)	
Type L (41)	DIN 43710				
Type U (42)					
Type L (43)	GOST R8.585-2001				
Voltage transmitter (mV)			0.003 %		0.003 %
−20 to 100 mV	-	0.002% * MV		0.0008% * MV	

1) Measured value transmitted via HART®.
2) Percentages based on the configured span of the analog output signal

MV = measured value

LRV = lower range value of the sensor in question

Total measurement error of transmitter at current output = $\sqrt{}$(Measurement error digital² + Measurement error D/A²)

Long-term drift, resistance thermometers (RTD) and resistance transmitters

Designation	Standard	Long-term drift (±) [1]		
		after 1 year	after 3 years	after 5 years
		Based on measured value		
Pt100 (1)	IEC 60751:2008	≤ 0.009% * (MV - LRV) or 0.03 °C (0.05 °F)	≤ 0.0103% * (MV - LRV) or 0.03 °C (0.05 °F)	≤ 0.0122% * (MV - LRV) or 0.04 °C (0.06 °F)
Pt200 (2)		0.10 °C (0.19 °F)	0.13 °C (0.24 °F)	0.15 °C (0.26 °F)
Pt500 (3)		≤ 0.0095% * (MV - LRV) or 0.04 °C (0.06 °F)	≤ 0.0121% * (MV - LRV) or 0.04 °C (0.06 °F)	≤ 0.0136% * (MV - LRV) or 0.04 °C (0.06 °F)
Pt1000 (4)		≤ 0.0096% * (MV - LRV) or 0.02 °C (0.04 °F)	≤ 0.0125% * (MV - LRV) or 0.03 °C (0.05 °F)	≤ 0.0143% * (MV - LRV) or 0.03 °C (0.05 °F)
Pt100 (5)	JIS C1604:1984	≤ 0.0077% * (MV - LRV) or 0.02 °C (0.04 °F)	≤ 0.0102% * (MV - LRV) or 0.03 °C (0.05 °F)	≤ 0.0112% * (MV - LRV) or 0.03 °C (0.05 °F)
Pt50 (8)	GOST 6651-94	≤ 0.0076% * (MV - LRV) or 0.05 °C (0.09 °F)	≤ 0.01% * (MV - LRV) or 0.06 °C (0.11 °F)	≤ 0.011% * (MV - LRV) or 0.07 °C (0.12 °F)
Pt100 (9)		≤ 0.008% * (MV - LRV) or 0.02 °C (0.04 °F)	≤ 0.0105% * (MV - LRV) or 0.03 °C (0.05 °F)	≤ 0.0114% * (MV - LRV) or 0.03 °C (0.05 °F)
Ni100 (6)	DIN 43760 IPTS-68	0.02 °C (0.04 °F)	0.02 °C (0.04 °F)	0.03 °C (0.05 °F)
Ni120 (7)				
Cu50 (10)	OIML R84: 2003 / GOST 6651-2009	0.04 °C (0.06 °F)	0.05 °C (0.09 °F)	0.06 °C (0.11 °F)
Cu100 (11)		0.03 °C (0.05 °F)	0.04 °C (0.06 °F)	0.04 °C (0.06 °F)
Ni100 (12)		0.02 °C (0.04 °F)	0.02 °C (0.04 °F)	0.03 °C (0.05 °F)
Ni120 (13)				

Designation	Standard	Long-term drift (±) [1]		
Cu50 (14)	OIML R84: 2003 / GOST 6651-94	0.04 °C (0.06 °F)	0.05 °C (0.09 °F)	0.06 °C (0.11 °F)
Resistance transmitter				
10 to 400 Ω		≤ 0.0055% * MV or 7 mΩ	≤ 0.0073% * MV or 10 mΩ	≤ 0.008% * (MV - LRV) or 11 mΩ
10 to 2 000 Ω		≤ 0.007% * (MV - LRV) or 47 mΩ	≤ 0.009% * (MV - LRV) or 60 mΩ	≤ 0.0067% * (MV - LRV) or 67 mΩ

1) Whichever is greater

Long-term drift, thermocouples (TC) and voltage transmitters

Designation	Standard	Long-term drift (±) [1]		
		after 1 year	after 3 years	after 5 years
		Based on measured value		
Type A (30)	IEC 60584-1 ASTM E230-3	≤ 0.049% * (MV - LRV) or 0.75 °C (1.35 °F)	≤ 0.063% * (MV - LRV) or 0.98 °C (1.76 °F)	≤ 0.068% * (MV - LRV) or 1.06 °C (1.91 °F)
Type B (31)		1.75 °C (3.15 °F)	2.30 °C (4.14 °F)	2.50 °C (4.50 °F)
Type C (32)	IEC 60584-1 ASTM E230-3 ASTM E988-96	0.80 °C (1.44 °F)	1.02 °C (1.84 °F)	1.10 °C (1.98 °F)
Type D (33)	ASTM E988-96	0.97 °C (1.75 °F)	1.25 °C (2.25 °F)	1.36 °C (2.45 °F)
Type E (34)	IEC 60584-1 ASTM E230-3	0.28 °C (0.50 °F)	0.36 °C (0.65 °F)	0.39 °C (0.70 °F)
Type J (35)		0.34 °C (0.61 °F)	0.44 °C (0.79 °F)	0.48 °C (0.86 °F)
Type K (36)		0.40 °C (0.72 °F)	0.51 °C (0.92 °F)	0.56 °C (1.01 °F)
Type N (37)		0.57 °C (1.03 °F)	0.676 °C (1.37 °F)	0.82 °C (1.48 °F)
Type R (38)		1.28 °C (2.30 °F)	1.69 °C (3.04 °F)	1.85 °C (3.33 °F)
Type S (39)		1.29 °C (2.32 °F)	1.70 °C (3.06 °F)	
Type T (40)		0.42 °C (0.76 °F)	0.55 °C (0.99 °F)	0.60 °C (1.08 °F)
Type L (41)	DIN 43710	0.28 °C (0.50 °F)	0.36 °C (0.65 °F)	0.40 °C (0.72 °F)
Type U (42)		0.41 °C (0.74 °F)	0.54 °C (0.97 °F)	0.58 °C (1.04 °F)
Type L (43)	GOST R8.585-2001	0.34 °C (0.61 °F)	0.45 °C (0.81 °F)	0.48 °C (0.86 °F)
Voltage transmitter (mV)				
−20 to 100 mV		≤ 0.027% * MV or 9 µV	≤ 0.035% * MV or 12 µV	≤ 0.038% * MV or 13 µV

1) The larger value is valid

Long-term drift analog output

Long-term drift D/A [1] (±)		
after 1 year	after 3 years	after 5 years
0.030%	0.036%	0.038%

1) Percentages based on the configured span of the analog output signal.

Influence of the reference junction

Pt100 DIN IEC 60751 Cl. B (internal reference junction with thermocouples TC)

Installation

Mounting location

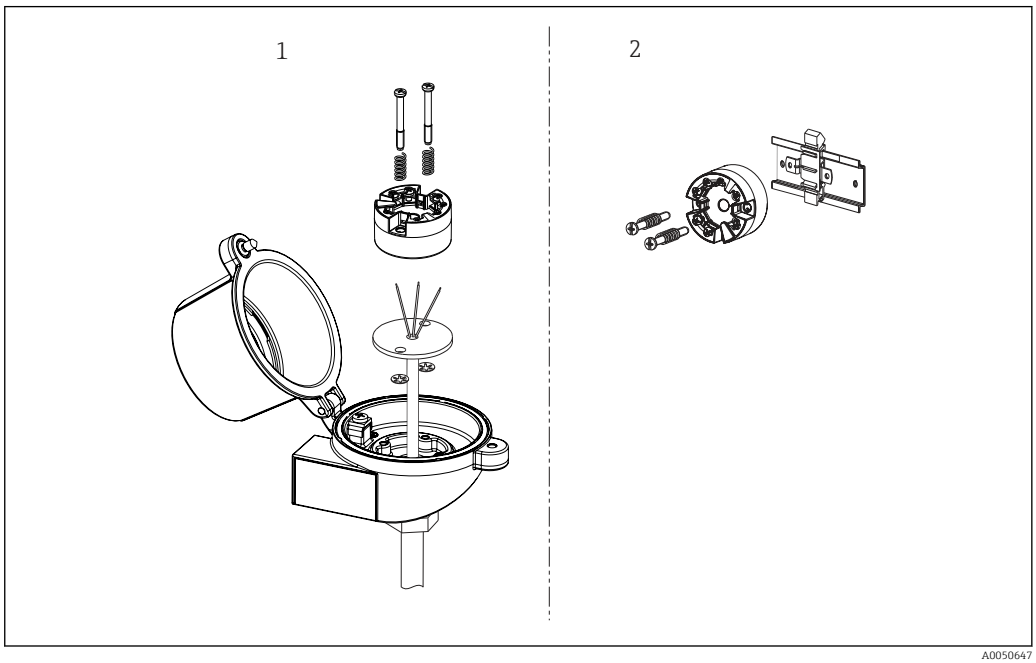

4 *Mounting location options for the transmitter*

1 *Terminal head, form B (flat face) as per DIN EN 50446, direct installation on insert with cable entry (middle hole 7 mm (0.28 in))*
2 *With DIN rail clip on DIN rail as per IEC 60715 (TH35)*

When installing the head transmitter in a terminal head form B (flat face), make sure there is sufficient space in the terminal head!

Orientation

No restrictions.

Environment

Ambient temperature

−40 to 85 °C (−40 to 185 °F), for hazardous areas see Ex documentation.

Storage temperature

−50 to 100 °C (−58 to 212 °F)

Operating height

Up to 4 000 m (13 123 ft) above sea level.

Humidity

Condensation:
- Permitted
- Max. rel. humidity: 95% as per IEC 60068-2-30

Climate class

Climate class C1 as per IEC 60654-1

Degree of protection

With screw terminals: IP 20. In the installed state, it depends on the terminal head or field housing used.

Shock and vibration resistance

Vibration resistance as per DNVGL-CG-0339: 2015 and DIN EN 60068-2-27
2 to 100 Hz at 4g (increased vibration stress)

Shock resistance as per KTA 3505 (section 5.8.4 Shock test)

Electromagnetic compatibility (EMC)

CE conformity

Electromagnetic compatibility in accordance with all the relevant requirements of the IEC/EN 61326 series and NAMUR Recommendation EMC (NE 21). For details, refer to the Declaration of Conformity. All tests were passed both with and without ongoing digital HART® communication. To ensure interference-free HART® communication with EMC influence, a shielded cable must be used, with the shield connected to ground on both sides.

Maximum measurement error <1% of measuring range.

Interference immunity as per IEC/EN 61326 series, industrial requirements

Interference emission as per IEC/EN 61326 series, Class B equipment

Insulation class

Class III

Overvoltage category

Overvoltage category II

Pollution level

Pollution degree 2

Mechanical construction

Design and dimensions

Dimensions in mm (in)

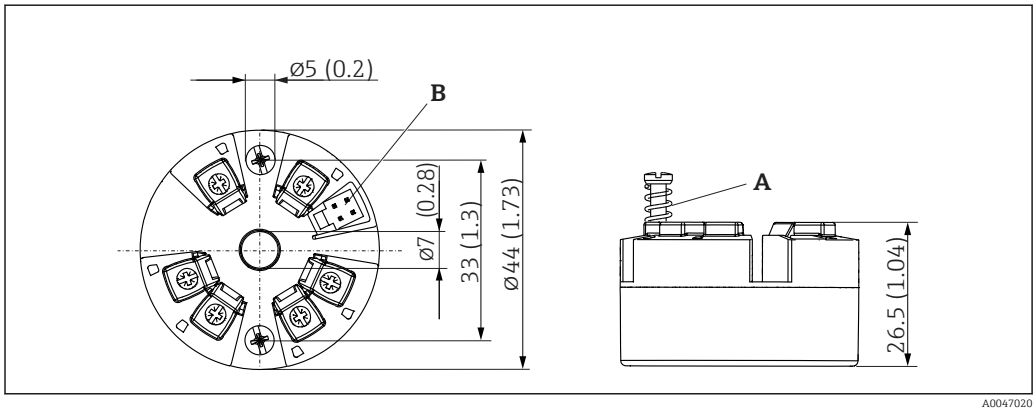

5 Version with screw terminals

A Spring travel L ≥ 5 mm (not for US - M4 securing screws)
B CDI interface for connecting a configuration tool

Weight

40 to 50 g (1.4 to 1.8 oz)

Materials

All the materials used are RoHS-compliant.

- Housing: polycarbonate (PC)
- Terminals: screw terminals, nickel-plated brass and gold-plated or tin-plated contacts
- Potting: QSIL 553

Operability

Remote operation

The configuration of HART® functions and device-specific parameters takes place via HART® communication or the CDI interface (service interface) of the device. There are special configuration tools from different manufacturers available for this purpose. Contact the manufacturer for further information.

Certificates and approvals

Current certificates and approvals for the product are available at www.endress.com on the relevant product page:

1. Select the product using the filters and search field.
2. Open the product page.
3. Select **Downloads**.

HART® certification

The temperature transmitter is registered by the FieldComm Group™. The device meets the requirements of the HART® Communication Protocol Specifications, Revision 7.

MTTF

168 years

The mean time to failure (MTTF) denotes the theoretically expected time until the device fails during normal operation. The term MTTF is used for systems that cannot be repaired, e.g., temperature transmitters.

Ordering information

Detailed ordering information is available from your nearest sales organization www.addresses.endress.com or in the Product Configurator at www.endress.com:

1. Select the product using the filters and search field.
2. Open the product page.
3. Select **Configuration**.

Accessories

The accessories currently available for the product can be selected at www.endress.com:

1. Select the product using the filters and search field.
2. Open the product page.
3. Select **Spare parts & Accessories**.

Device-specific accessories

Accessories for the head transmitter
Field housing TA30x for Endress+Hauser head transmitter
Adapter for DIN rail mounting, DIN rail clip as per IEC 60715 (TH35) without securing screws
Standard - DIN mounting set (2 screws + springs, 4 lock washers and 1 CDI interface cover)
US - M4 securing screws (2 M4 screws and 1 CDI interface cover)

Accessories enclosed	
Wall mounting bracket, 316 L	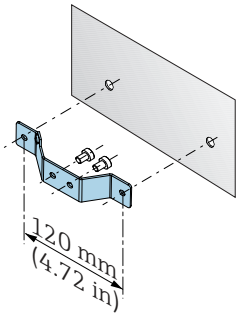 A0061686
Pipe mounting bracket, 316 L	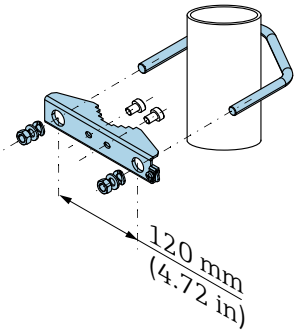 A0061687

Communication-specific accessories

Commubox FXA195 USB/HART modem
Connects intrinsically safe 'smart transmitters' with a HART protocol to the USB interface of a laptop/PC. This enables the remote operation of the transmitters with FieldCare.

Technical Information TI00404F

www.endress.com/fxa195

Service-specific accessories

DeviceCare SFE100
DeviceCare is an Endress+Hauser configuration tool for field devices using the following communication protocols: HART, PROFIBUS DP/PA, FOUNDATION Fieldbus, IO/Link, Modbus, CDI and Endress+Hauser Common Data Interfaces.

Technical Information TI01134S

www.endress.com/sfe100

FieldCare SFE500
FieldCare is a configuration tool for Endress+Hauser and third-party field devices based on DTM technology.
The following communication protocols are supported: HART, WirelessHART, PROFIBUS, FOUNDATION Fieldbus, Modbus, IO-Link, EtherNet/IP, PROFINET and PROFINET APL.

Technical Information TI00028S

www.endress.com/sfe500

Netilion
With the Netilion IIoT ecosystem, Endress+Hauser enables the optimization of plant performance, digitization of workflows, sharing of knowledge and improved collaboration. Drawing upon decades of experience in process automation, Endress+Hauser offers the process industry an IIoT ecosystem designed to effortlessly extract insights from data. These insights allow process optimization, leading to increased plant availability, efficiency, reliability and ultimately a more profitable plant.

www.netilion.endress.com

Online tools

Product information about the entire life cycle of the device is available at:
www.endress.com/onlinetools

System components

RN series active barrier

Single- or two-channel active barrier for safe separation of 0/4 to -20 mA standard signal circuits with bidirectional HART transmission. In the signal duplicator option, the input signal is transmitted to two galvanically isolated outputs. The device has one active and one passive current input; the outputs can be operated actively or passively.

For more information, please refer to: www.endress.com

Process indicators from the RIA product family

Easily readable process indicators with various functions: loop-powered indicators for displaying 4-20 mA values, display of up to four HART variables, process indicators with control units, limit value monitoring, sensor power supply, and galvanic isolation.

Universal application thanks to international hazardous area approvals, suitable for panel mounting or field installation..

For more information, please refer to: www.endress.com

Documentation

For an overview of the scope of the associated Technical Documentation, refer to the following:
- *Device Viewer* (www.endress.com/deviceviewer): Enter the serial number from the nameplate
- *Endress+Hauser Operations app*: Enter serial number from nameplate or scan matrix code on nameplate.

The following document types are available in the Downloads area of the Endress+Hauser website (www.endress.com/downloads), depending on the product configuration:

Document type	Purpose and content of the document
Technical Information (TI)	**Planning aid** This document contains all the technical data on the product and provides an overview of everything that can be ordered with the product.
Brief Operating Instructions (KA)	**Quick guide to obtaining the first measured value** The Operating Instructions contain all the essential information about the product from incoming acceptance to initial commissioning.
Operating Instructions (BA)	**Reference** The Operating Instructions contain the information that is required in the various phases of the life cycle of the product: From product identification, incoming acceptance and storage, to mounting, connection, operation and commissioning through to troubleshooting, maintenance and disposal.
Description of Device Parameters (GP)	**Reference for parameters** The document contains detailed explanations of readable or configurable parameters in the product. The description is aimed at those who work with the product over its entire life cycle and perform specific configurations.
Safety Instructions (XA)	Safety Instructions for electrical equipment in hazardous areas are supplied with the product depending on the approval. These are an integral part of the Operating Instructions. The nameplate indicates the Safety Instructions (XA) that are relevant to the product.
Supplementary device-dependent documentation (SD/FY)	Always comply strictly with the instructions in the relevant supplementary documentation. The supplementary documentation is an integral part of the product documentation.



www.addresses.endress.com

Endress+Hauser

People for Process Automation