KA01251F/00/EN/03.18
71394721
2018-04-12

Brief Operating Instructions
Micropilot FMR60
HART

Free space radar

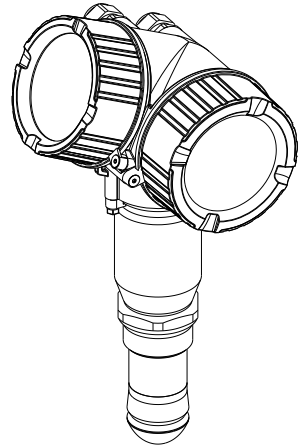

These Instructions are Brief Operating Instructions; they are not a substitute for the Operating Instructions pertaining to the device.

Detailed information about the device can be found in the Operating Instructions and the other documentation:
Available for all device versions via:
- Internet: www.endress.com/deviceviewer
- Smart phone/tablet: *Endress+Hauser Operations App*

Endress+Hauser
People for Process Automation

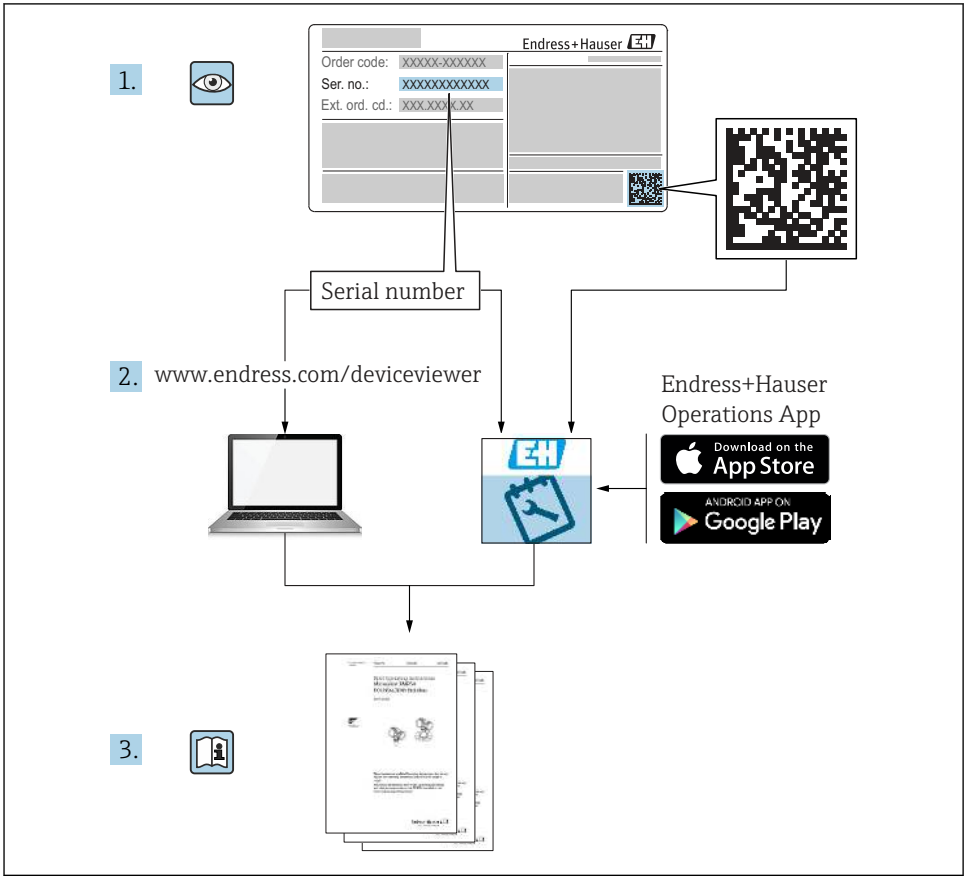
1.
Endress+Hauser
Order code: XXXXX-XXXXXX
Ser. no.: XXXXXXXXXXXX
Ext. ord. cd.: XXX.XXX-XXX
Serial number
2.
www.endress.com/deviceviewer
Endress+Hauser
Operations App
Download on the App Store
ANDROID APP ON Google Play
3.

A0023555

Table of contents

1 Important document information ... 4
1.1 Symbols ... 4
1.2 Terms and abbreviations ... 6
1.3 Registered trademarks ... 7

2 Basic safety instructions ... 8
2.1 Requirements for the personnel ... 8
2.2 Designated use ... 8
2.3 Workplace safety ... 9
2.4 Operational safety ... 9
2.5 Product safety ... 9

3 Product description ... 11
3.1 Product design ... 11

4 Incoming acceptance and product identification ... 11
4.1 Incoming acceptance ... 11
4.2 Product identification ... 12

5 Storage, Transport ... 13
5.1 Storage conditions ... 13
5.2 Transporting the product to the measuring point ... 13

6 Installation ... 14
6.1 Installation conditions ... 14
6.2 Installation: Drip-off antenna, PTFE 50 mm / 2" ... 20
6.3 Container with heat insulation ... 21
6.4 Turning the transmitter housing ... 21
6.5 Turning the display ... 22
6.6 Post-installation check ... 23

7 Electrical connection ... 24
7.1 Connection conditions ... 24

8 Commissioning via SmartBlue (app) ... 36
8.1 Requirements ... 36
8.2 Commissioning ... 37

9 Commissioning via wizard ... 41

10 Commissioning (via operating menu) ... 42
10.1 Display and operating module ... 42
10.2 Operating menu ... 45
10.3 Unlock the device ... 46
10.4 Setting the operating language ... 46
10.5 Configuration of a level measurement ... 47
10.6 User-specific applications ... 48

1 Important document information

1.1 Symbols

1.1.1 Safety symbols

Symbol	Meaning
DANGER	**DANGER!** This symbol alerts you to a dangerous situation. Failure to avoid this situation will result in serious or fatal injury.
WARNING	**WARNING!** This symbol alerts you to a dangerous situation. Failure to avoid this situation can result in serious or fatal injury.
CAUTION	**CAUTION!** This symbol alerts you to a dangerous situation. Failure to avoid this situation can result in minor or medium injury.
NOTICE	**NOTE!** This symbol contains information on procedures and other facts which do not result in personal injury.

1.1.2 Electrical symbols

Symbol	Meaning	Symbol	Meaning
⎓	Direct current	~	Alternating current
⎓ ~	Direct current and alternating current	⏚	**Ground connection** A grounded terminal which, as far as the operator is concerned, is grounded via a grounding system.

Symbol	Meaning
⏚	**Protective Earth (PE)** A terminal which must be connected to ground prior to establishing any other connections. The ground terminals are situated inside and outside the device: ▪ Inner ground terminal: Connects the protectiv earth to the mains supply. ▪ Outer ground terminal: Connects the device to the plant grounding system.

1.1.3 Tool symbols

 A0011219	 A0011220	 A0013442	 A0011221	 A0011222
Cross-head screwdriver	Flat blade screwdriver	Torx screwdriver	Allen key	Hexagon wrench

1.1.4 Symbols for certain types of information

Symbol	Meaning	Symbol	Meaning
	**Permitted** Procedures, processes or actions that are permitted.		**Preferred** Procedures, processes or actions that are preferred.
	**Forbidden** Procedures, processes or actions that are forbidden.		**Tip** Indicates additional information.
	Reference to documentation.		Reference to page.
	Reference to graphic.	1., 2., 3...	Series of steps.
	Result of a step.		Visual inspection.

1.1.5 Symbols in graphics

Symbol	Meaning
1, 2, 3 ...	Item numbers
1., 2., 3...	Series of steps
A, B, C, ...	Views
A-A, B-B, C-C, ...	Sections
	**Hazardous area** Indicates a hazardous area.
	**Safe area (non-hazardous area)** Indicates the non-hazardous area.

1.1.6 Symbols at the device

Symbol	Meaning
	**Safety instructions** Observe the safety instructions contained in the associated Operating Instructions.
	**Temperature resistance of the connection cables** Specifies the minimum value of the temperature resistance of the connection cables.

1.2 Terms and abbreviations

Term/abbreviation	Explanation
BA	Document type "Operating Instructions"
KA	Document type "Brief Operating Instructions"
TI	Document type "Technical Information"
SD	Document type "Special Documentation"
XA	Document type "Safety Instructions"
PN	Nominal pressure
MWP	Maximum Working Pressure The MWP can also be found on the nameplate.
ToF	Time of Flight
FieldCare	Scalable software tool for device configuration and integrated plant asset management solutions
DeviceCare	Universal configuration software for Endress+Hauser HART, PROFIBUS, FOUNDATION Fieldbus and Ethernet field devices
DTM	Device Type Manager
DD	Device Description for HART communication protocol
ε_r (DC value)	Relative dielectric constant
Operating tool	The term "operating tool" is used in place of the following operating software: ▪ FieldCare / DeviceCare, for operation via HART communication and PC ▪ SmartBlue (app), for operation using an Android or iOS smartphone or tablet.
BD	Blocking Distance; no signals are analyzed within the BD.
PLC	Programmable Logic Controller
CDI	Common Data Interface
PFS	Pulse Frequence Status (Switching output)

1.3 Registered trademarks

HART®
Registered trademark of the HART Communication Foundation, Austin, USA

Bluetooth®
The Bluetooth® word mark and logos are registered trademarks owned by the Bluetooth SIG, Inc. and any use of such marks by Endress+Hauser is under license. Other trademarks and trade names are those of their respective owners.

Apple®
Apple, the Apple logo, iPhone, and iPod touch are trademarks of Apple Inc., registered in the U.S. and other countries. App Store is a service mark of Apple Inc.

Android®
Android, Google Play and the Google Play logo are trademarks of Google Inc.

KALREZ®, VITON®
Registered trademark of DuPont Performance Elastomers L.L.C., Wilmington, USA

TEFLON®
Registered trademark of E.I. DuPont de Nemours & Co., Wilmington, USA

2 Basic safety instructions

2.1 Requirements for the personnel

The personnel must fulfill the following requirements for its tasks:
- Trained, qualified specialists must have a relevant qualification for this specific function and task.
- Are authorized by the plant owner/operator.
- Are familiar with federal/national regulations.
- Before starting work, read and understand the instructions in the manual and supplementary documentation as well as the certificates (depending on the application).
- Follow instructions and comply with basic conditions.

2.2 Designated use

Application and media
The measuring device described in these Operating Instructions is intended for continuous, non-contact level measurement in liquids, pastes and sludges. Because of its operating frequency of approx. 80 GHz, a maximum radiated peak power of 6.3 mW and an average power output of 63 µW, unrestricted use outside of closed, metallic vessels is also permitted (for example over basins or open channels). Operation does not pose any danger whatsoever to humans and animals.

If the limit values specified in the "Technical data" and the conditions listed in the instructions and additional documentation are observed, the measuring device may be used for the following measurements only:
- Measured process variables: level, distance, signal strength
- Calculated process variables: volume or mass in vessels of any shape; flow through measuring weirs or channels (calculated from the level by the linearization functionality)

To ensure that the measuring device remains in proper condition for the operation time:
- Use the measuring device only for media against which the process-wetted materials are adequately resistant.
- Observe the limit values in "Technical data".

Incorrect use
The manufacturer is not liable for damage caused by improper or non-designated use.

Verification for borderline cases:
- For special fluids and fluids for cleaning, Endress+Hauser is glad to provide assistance in verifying the corrosion resistance of fluid-wetted materials, but does not accept any warranty or liability.

Residual risks
Due to heat transfer from the process as well as power loss in the electronics, the temperature of the electronics housing and the assemblies it contains (e.g. display module, main electronics module and I/O electronics module) may rise to 80 °C (176 °F). When in operation, the sensor may reach a temperature close to the medium temperature.

Danger of burns from contact with surfaces!
- For elevated fluid temperature, ensure protection against contact to prevent burns.

2.3 Workplace safety

For work on and with the device:
- ▶ Wear the required personal protective equipment according to federal/national regulations.

2.4 Operational safety

Risk of injury.
- ▶ Operate the device in proper technical condition and fail-safe condition only.
- ▶ The operator is responsible for interference-free operation of the device.

Conversions to the device

Unauthorized modifications to the device are not permitted and can lead to unforeseeable dangers.
- ▶ If, despite this, modifications are required, consult with the manufacturer.

Repair

To ensure continued operational safety and reliability,
- ▶ Carry out repairs on the device only if they are expressly permitted.
- ▶ Observe federal/national regulations pertaining to repair of an electrical device.
- ▶ Use original spare parts and accessories from the manufacturer only.

Hazardous area

To eliminate a danger for persons or for the facility when the device is used in the hazardous area (e.g. explosion protection, pressure vessel safety):
- ▶ Based on the nameplate, check whether the ordered device is permitted for the intended use in the hazardous area.
- ▶ Observe the specifications in the separate supplementary documentation that is an integral part of these Instructions.

2.5 Product safety

This measuring device is designed in accordance with good engineering practice to meet state-of-the-art safety requirements, has been tested, and left the factory in a condition in which it is safe to operate. It meets general safety standards and legal requirements.

NOTICE

Loss of degree of protection by opening of the device in humid environments
- ▶ If the device is opened in a humid environment, the degree of protection indicated on the nameplate is no longer valid. This may also impair the safe operation of the device.

2.5.1 CE mark

The measuring system meets the legal requirements of the applicable EC guidelines. These are listed in the corresponding EC Declaration of Conformity together with the standards applied.

Endress+Hauser confirms successful testing of the device by affixing to it the CE mark.

2.5.2 EAC conformity

The measuring system meets the legal requirements of the applicable EAC guidelines. These are listed in the corresponding EAC Declaration of Conformity together with the standards applied.

Endress+Hauser confirms successful testing of the device by affixing to it the EAC mark.

3 Product description

3.1 Product design

3.1.1 Micropilot FMR60

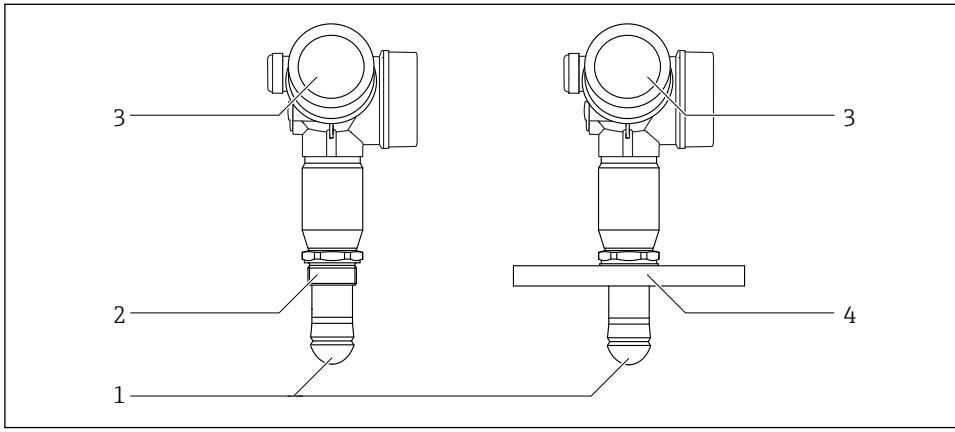

1 *Design of the Micropilot FMR60*

1 Drip-off antenna PTFE
2 Process connection (Thread)
3 Electronics housing
4 Flange

4 Incoming acceptance and product identification

4.1 Incoming acceptance

Check the following during incoming acceptance:
- Are the order codes on the delivery note and the product sticker identical?
- Are the goods undamaged?
- Do the nameplate data match the ordering information on the delivery note?
- If required (see nameplate): Are the safety instructions (XA) present?

If one of these conditions does not apply, please contact your Endress+Hauser sales office.

4.2 Product identification

The following options are available for identification of the measuring device:
- Nameplate specifications
- Extended order code with breakdown of the device features on the delivery note
- Enter the serial number on the nameplate into *W@M Device Viewer* (www.endress.com/deviceviewer): all the information about the measuring device is displayed.
- Enter the serial number on the nameplate into the *Endress+Hauser Operations App* or scan the 2-D matrix code (QR code) on the nameplate with the *Endress+Hauser Operations App*: all the information about the measuring device is displayed.

4.2.1 Nameplate

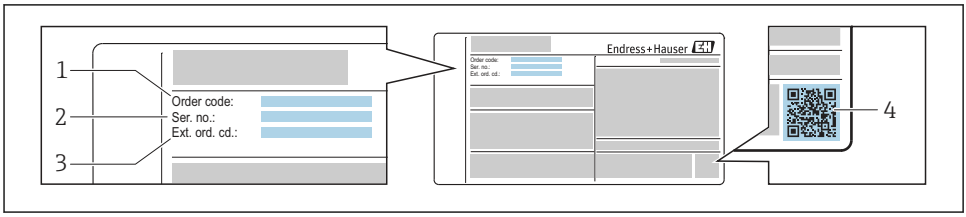

2 *Example of a nameplate*

1 *Order code*
2 *Serial number (ser. no.)*
3 *Extended order code (Ext. ord. cd.)*
4 *2-D matrix code (QR code)*

For detailed information on the breakdown of the specifications on the nameplate, see the Operating Instructions for the device .

Up to 33 characters of the extended order code are indicated on the nameplate. If the extended order code contains additional characters, these cannot be displayed.

However, the complete extended order code can also be displayed via the device operating menu: **Extended order code 1 to 3** parameter

5 Storage, Transport

5.1 Storage conditions

- Permitted storage temperature: −40 to +80 °C (−40 to +176 °F)
- Use original packaging.

5.2 Transporting the product to the measuring point

NOTICE

Housing or sensor may become damaged or pull off.

Risk of injury!

- ▶ Transport the measuring device to the measuring point in its original packaging or by the process connection.
- ▶ Always secure lifting equipment (slings, eyes, etc.) at the process connection and never lift the device by the electronic housing or sensor. Pay attention to the center of gravity of the device so that it does not tilt or slip unintentionally.
- ▶ Follow the safety instructions and transport conditions for devices over 18 kg (39.6 lbs), (IEC61010).

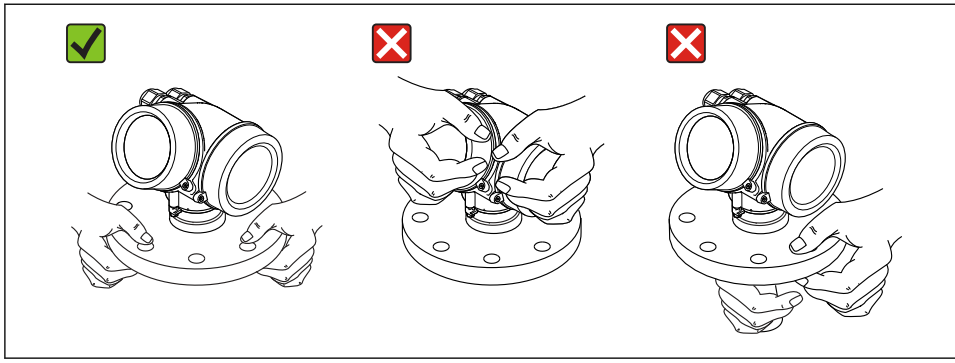

A0032300

6 Installation

6.1 Installation conditions

6.1.1 Orientation - Liquid media

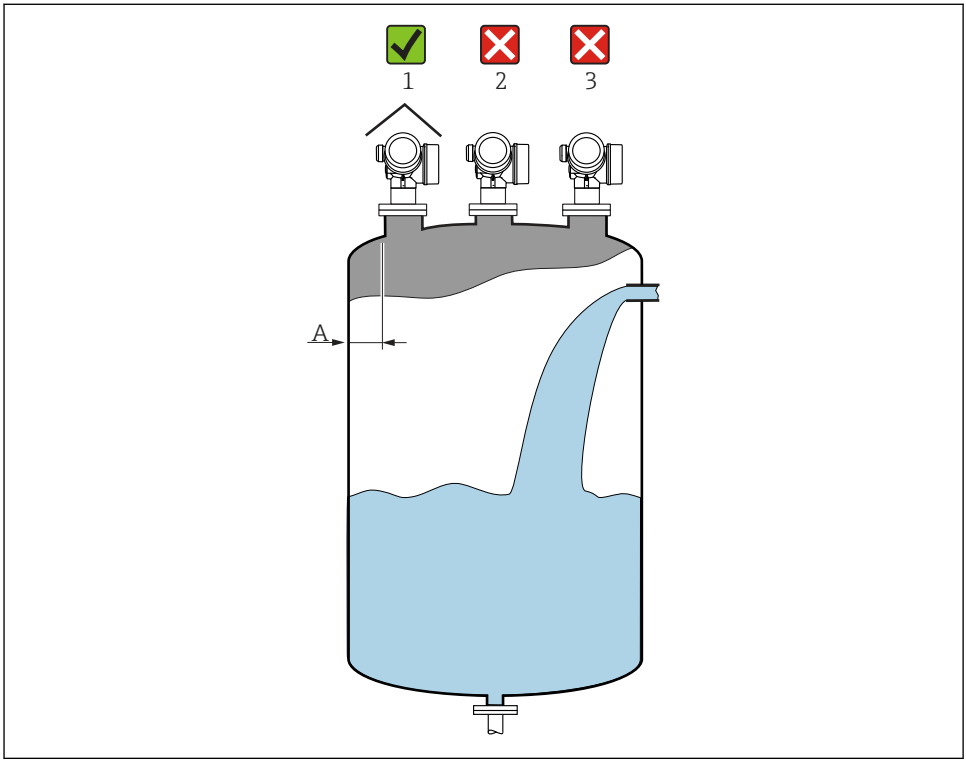

A0016882

- Recommended distance **A** wall - nozzle outer edge: ~ 1/6 of the container diameter. However, the device must not under any circumstances be mounted closer than 15 cm (5.91 in) to the tank wall.
- Not in the center (2) as interference can cause signal loss.
- Not above the filling curtain (3).
- The use of a weather protection cover (1) is recommended to protect the transmitter from direct sunlight or rain.

Internal container fittings

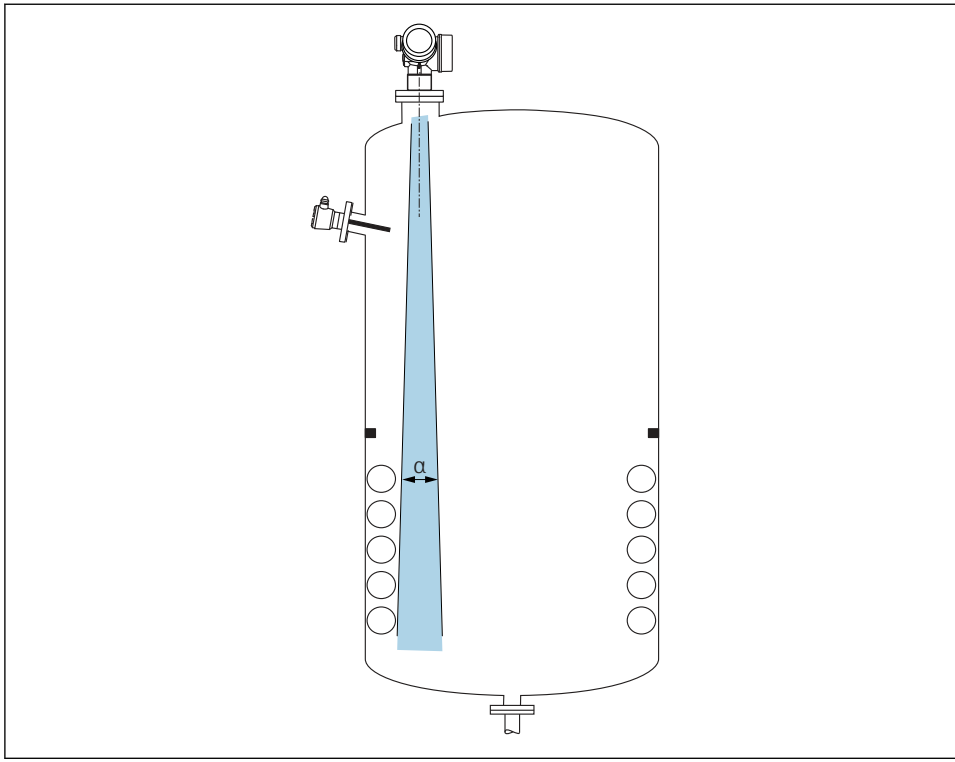

A0031777

Avoid the location of internal fittings (limit switches, temperature sensors, struts, vacuum rings, heating coils, baffles etc.) inside the signal beam. Take into account the beam angle → 17.

Avoiding interference echoes

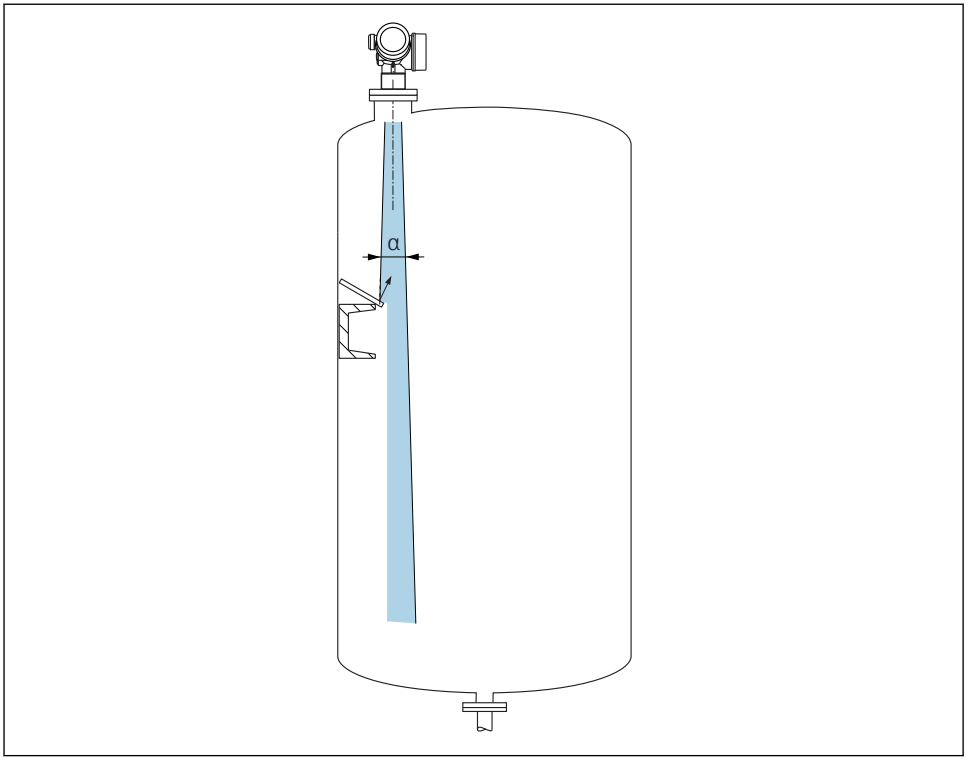

A0031813

Metal deflector plates, installed at an angle to scatter the radar signals, help prevent interference echoes.

6.1.2 Optimization options

- Antenna size
  The larger the antenna the smaller the beam angle α, resulting in fewer interference echoes → 17.
- Mapping
  Measurement can be optimized by electronically suppressing interference echoes.

6.1.3 Beam angle

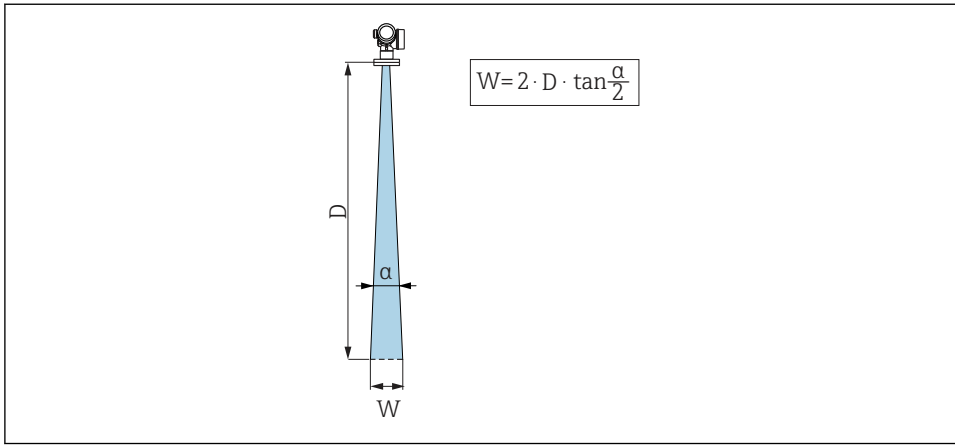

3 Relationship between beam angle a, distance D and beamwidth diameter W

The beam angle is defined as the angle α where the energy density of the radar waves reaches half the value of the maximum energy density (3dB width). Microwaves are also emitted outside the signal beam and can be reflected off interfering installations.

FMR60	
	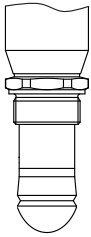 A0032080
Antenna [1]	Drip-off, PTFE 50 mm / 2"
Beam angle α	6 °

Distance (D)	**Beamwidth diameter W**
5 m (16 ft)	0.52 m (1.70 ft)
10 m (33 ft)	1.05 m (3.44 ft)
15 m (49 ft)	1.57 m (5.15 ft)
20 m (66 ft)	2.10 m (6.89 ft)
25 m (82 ft)	2.62 m (8.60 ft)
30 m (98 ft)	3.14 m (10.30 ft)
35 m (115 ft)	3.67 m (12.04 ft)
40 m (131 ft)	4.19 m (13.75 ft)
45 m (148 ft)	4.72 m (15.49 ft)
50 m (164 ft)	5.24 m (17.19 ft)

1) Order code 070 in product structure

6.1.4 Measurement through a ball valve

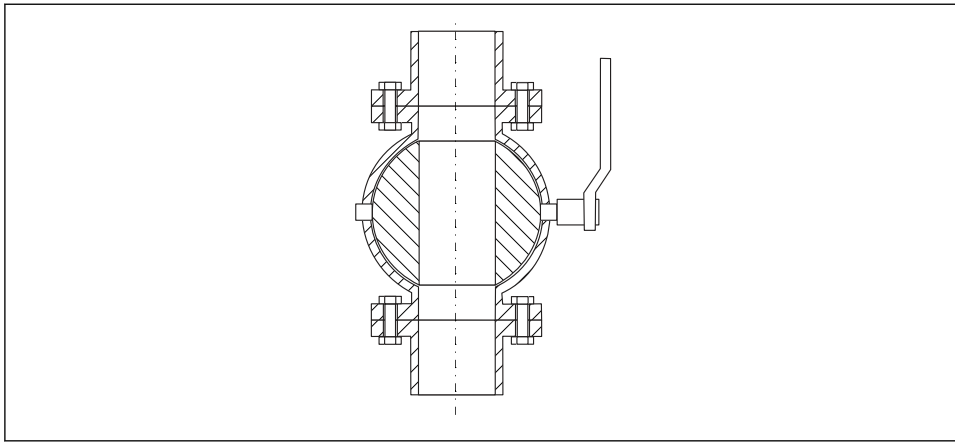

A0034564

- Measurements can be performed through an open full bore ball valve without any problems.
- At the transitions, no gap may be left exceeding 1 mm (0.04 in).
- Diameter of opening of ball valve must always be equivalent to pipe diameter; avoid edges and constrictions.

6.1.5 External measurement through plastic cover or dielectric windows

- Dielectric constant of medium: $\varepsilon_r \geq 10$
- The distance from the tip of the antenna to the tank should be approx. 100 mm (4 in).
- If possible, avoid installation positions in which condensate or buildup can form between the antenna and the vessel.
- In the case of outdoor installations, ensure that the area between the antenna and the tank is protected from the weather.
- Do not install any fittings or attachments between the antenna and the tank that could reflect the signal.

Suitable thickness of tank roof or window

Material	PE	PTFE	PP	Perspex
ε_r (Dielectric constant of medium)	2.3	2.1	2.3	3.1
Optimum thickness	1.25 mm (0.049 in) [1]	1.3 mm (0.051) [1]	1.25 mm (0.049 in) [1]	1.07 mm (0.042 in) [1]

1) or an integer that is a multiple of this value; it should be noted here that the microwave transparency decreases significantly with increasing window thickness.

6.2 Installation: Drip-off antenna, PTFE 50 mm / 2"

6.2.1 FMR60 - Aligning the antenna axis

Align the antenna vertically to the product surface.

Attention:

The maximum reach of the antenna can be reduced if it is not installed perpendicular to the product.

6.2.2 Radial alignment of the antenna

Based on the directional characteristic, radial alignment of the antenna is not necessary.

6.2.3 Information concerning nozzles

The maximum nozzle length H_{max} depends on the nozzle diameter D:

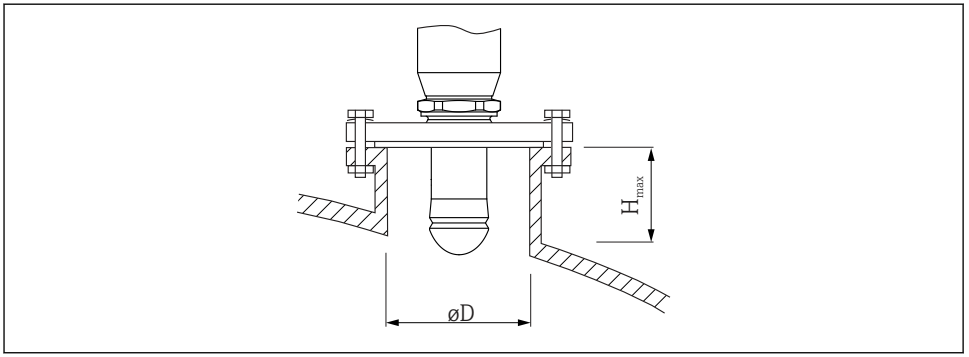

A0032209

Nozzle diameter (ØD)	Maximum nozzle length (H_{max}) [1]
50 to 80 mm (2 to 3.2 in)	750 mm (30 in)
80 to 100 mm (3.2 to 4 in)	1 150 mm (46 in)
100 to 150 mm (4 to 6 in)	1 450 mm (58 in)
≥150 mm (6 in)	2 200 mm (88 in)

1) In the case of longer nozzles, a reduced measuring performance must be anticipated.

Note the following if the antenna does not project out of the nozzle:

- The end of the nozzle must be smooth and free from burrs. The edge of the nozzle should be rounded if possible.
- Mapping must be performed.
- Please contact Endress+Hauser for applications with nozzles that are higher than indicated in the table.

6.2.4 Information concerning threaded connections

- When screwing in, turn by the hex bolt only.
- Tool: open-ended wrench 55 mm
- Maximum permissible torque: 50 Nm (36 lbf ft)

6.3 Container with heat insulation

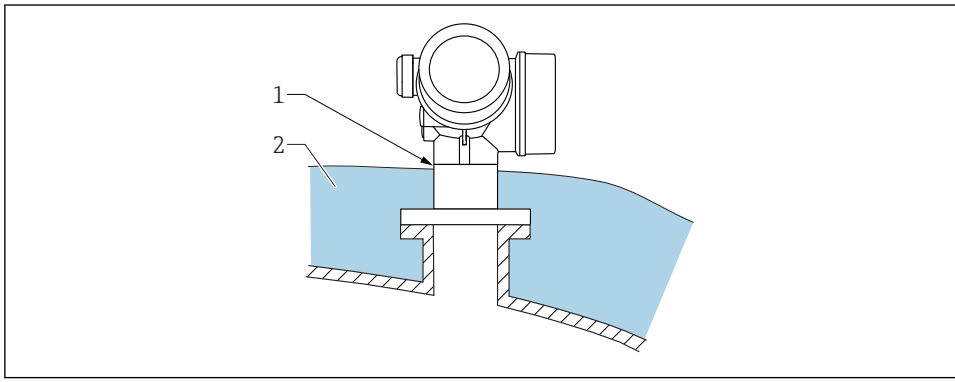

A0032207

If process temperatures are high, the device should be included in the usual container insulation system (2) to prevent the electronics from heating as a result of thermal radiation or convection. The insulation should not be higher than the neck of the device (1).

6.4 Turning the transmitter housing

To provide easier access to the connection compartment or display module, the transmitter housing can be turned:

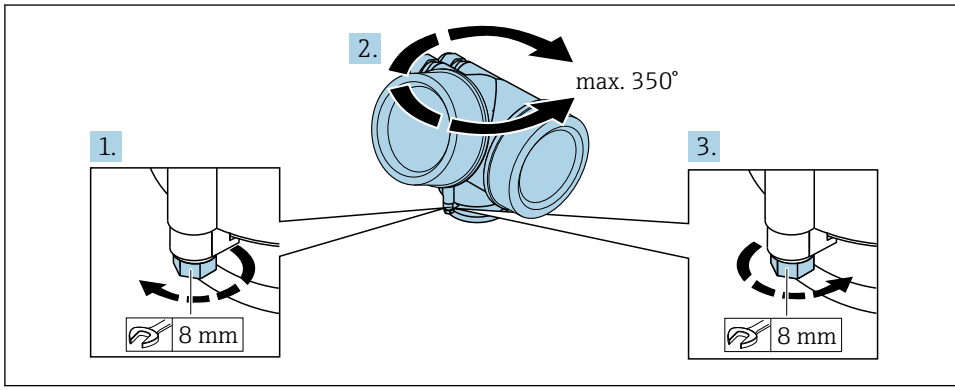

A0032242

1. Unscrew the securing screw using an open-ended wrench.
2. Rotate the housing in the desired direction.
3. Tighten the securing screw (1.5 Nm for plastic housing; 2.5 Nm for aluminum or stainless steel housing).

6.5 Turning the display

6.5.1 Opening cover

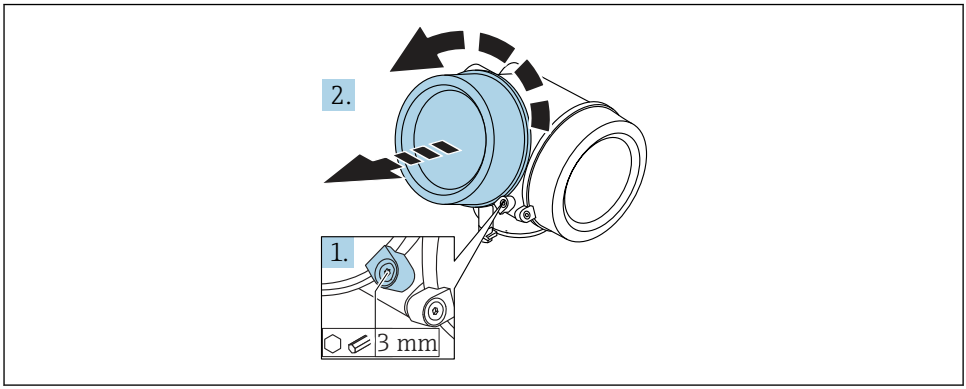

A0021430

1. Loosen the screw of the securing clamp of the electronics compartment cover using an Allen key (3 mm) and turn the clamp 90 ° counterclockwise.
2. Unscrew cover and check lid gasket, replace if necessary.

6.5.2 Turning the display module

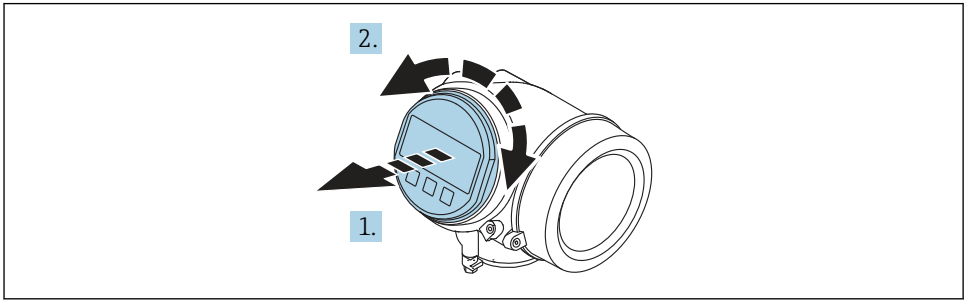

A0036401

1. Pull out the display module with a gentle rotational movement.
2. Rotate the display module to the desired position: max. 8 × 45 ° in each direction.

3. Feed the coiled cable into the gap between the housing and main electronics module and plug the display module into the electronics compartment until it engages.

6.5.3 Closing electronics compartment cover

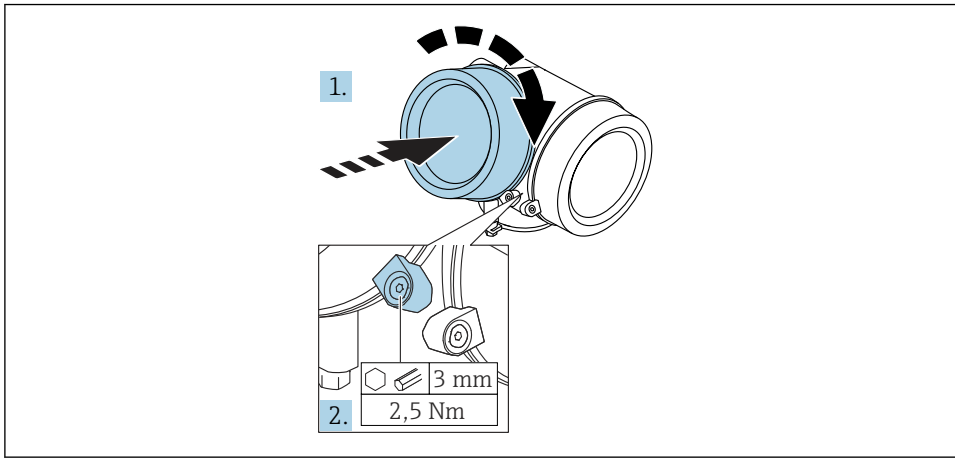

A0021451

1. Screw back firmly electronics compartment cover.
2. Turning securing clamp 90 ° clockwise and tighten the clamp with 2.5 Nm using the Allen key (3 mm).

6.6 Post-installation check

❑	Is the device undamaged (visual inspection)?
❑	Does the device conform to the measuring point specifications? For example: ▪ Process temperature ▪ Process pressure (refer to the chapter on "Material load curves" of the "Technical Information" document) ▪ Ambient temperature range ▪ Measuring range
❑	Are the measuring point identification and labeling correct (visual inspection)?
❑	Is the device adequately protected from precipitation and direct sunlight?
❑	Are the securing screw and securing clamp tightened securely?

7 Electrical connection

7.1 Connection conditions

7.1.1 Terminal assignment

Terminal assignment 2-wire: 4-20 mA HART

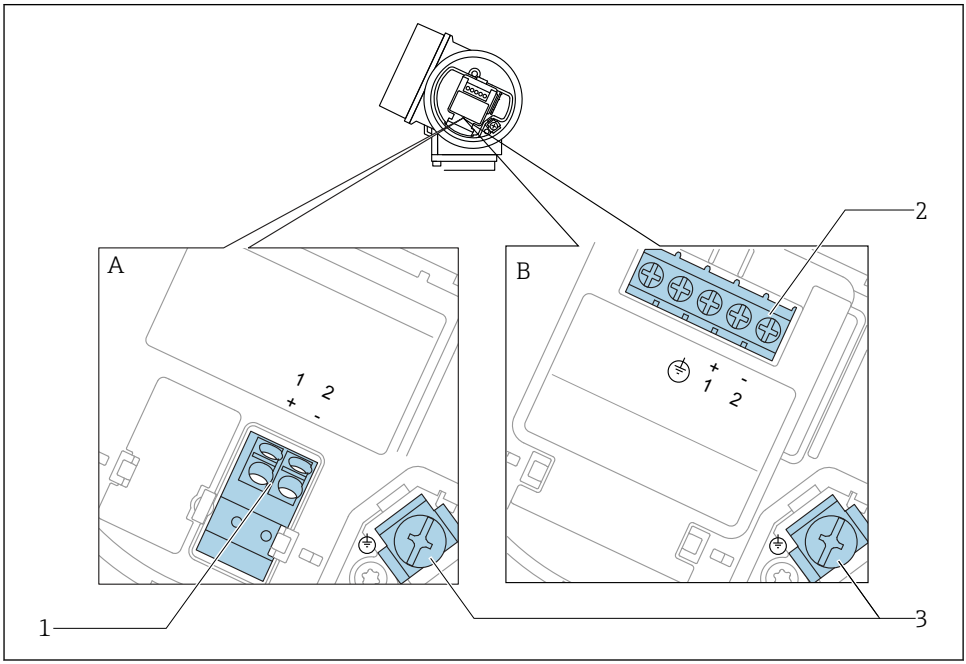

4 *Terminal assignment 2-wire: 4-20 mA HART*

A Without integrated overvoltage protection
B With integrated overvoltage protection
1 Connection 4-20 mA HART passive: terminals 1 and 2, without integrated overvoltage protection
2 Connection 4-20 mA HART passive: terminals 1 and 2, with integrated overvoltage protection
3 Terminal for cable screen

Block diagram 2-wire: 4-20 mA HART

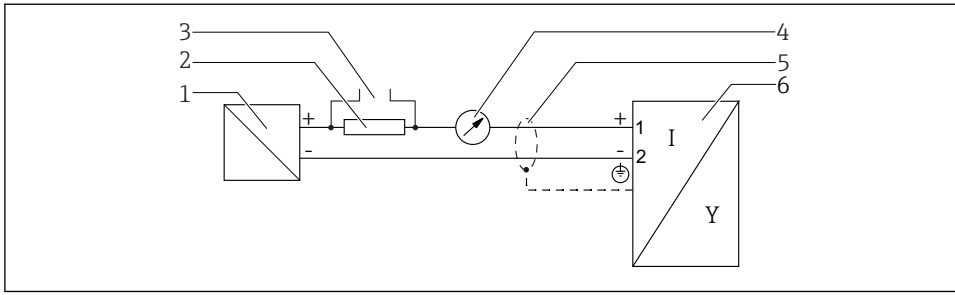

5 Block diagram 2-wire: 4-20 mA HART

1 Active barrier with power supply (e.g. RN221N); observe terminal voltage
2 HART communication resistor (≥ 250 Ω); observe maximum load
3 Connection for Commubox FXA195 or FieldXpert SFX350/SFX370 (via VIATOR Bluetooth modem)
4 Analog display device; observe maximum load
5 Cable screen; observe cable specification
6 Measuring device

Terminal assignment 2-wire: 4-20 mA HART, switch output

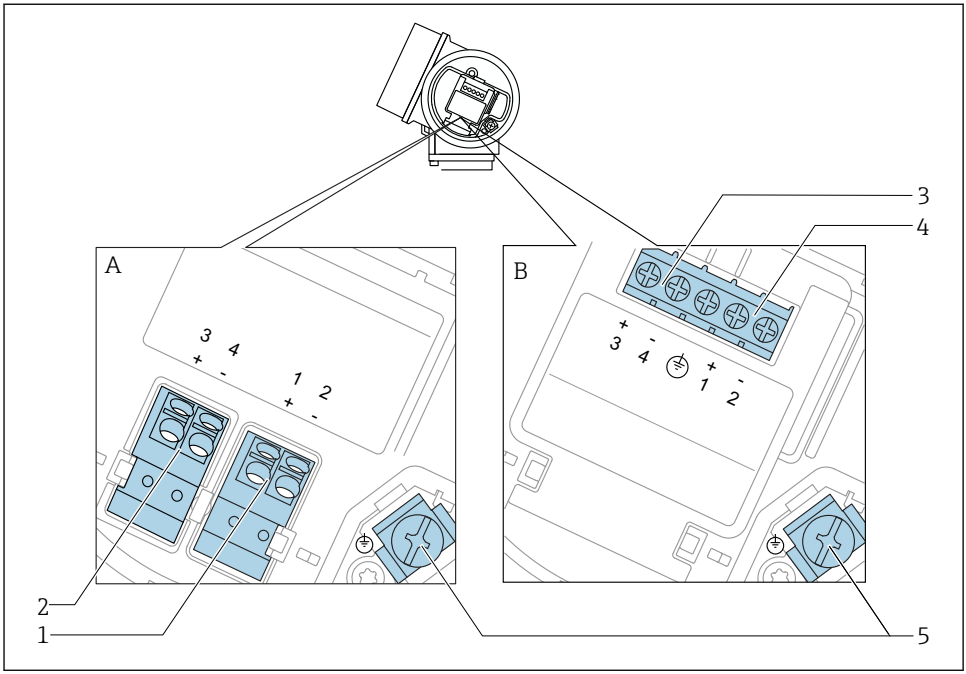

6 Terminal assignment 2-wire: 4-20 mA HART, switch output

A Without integrated overvoltage protection
B With integrated overvoltage protection
1 Connection 4-20 mA HART passive: terminals 1 and 2, without integrated overvoltage protection
2 Connection switch output (Open Collector): terminals 3 and 4, without integrated overvoltage protection
3 Connection switch output (Open Collector): terminals 3 and 4, with integrated overvoltage protection
4 Connection 4-20 mA HART passive: terminals 1 and 2, with integrated overvoltage protection
5 Terminal for cable screen

Block diagram 2-wire: 4-20 mA HART, switch output

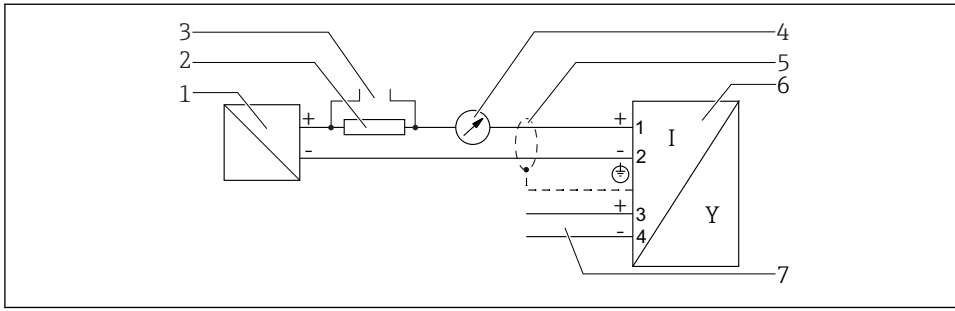

7 *Block diagram 2-wire: 4-20 mA HART, switch output*

1 *Active barrier with power supply (e.g. RN221N); observe terminal voltage*
2 *HART communication resistor (≥ 250 Ω); observe maximum load*
3 *Connection for Commubox FXA195 or FieldXpert SFX350/SFX370 (via VIATOR Bluetooth modem)*
4 *Analog display device; observe maximum load*
5 *Cable screen; observe cable specification*
6 *Measuring device*
7 *Switch output (Open Collector)*

Terminal assignment 2-wire: 4-20 mA HART, 4-20 mA

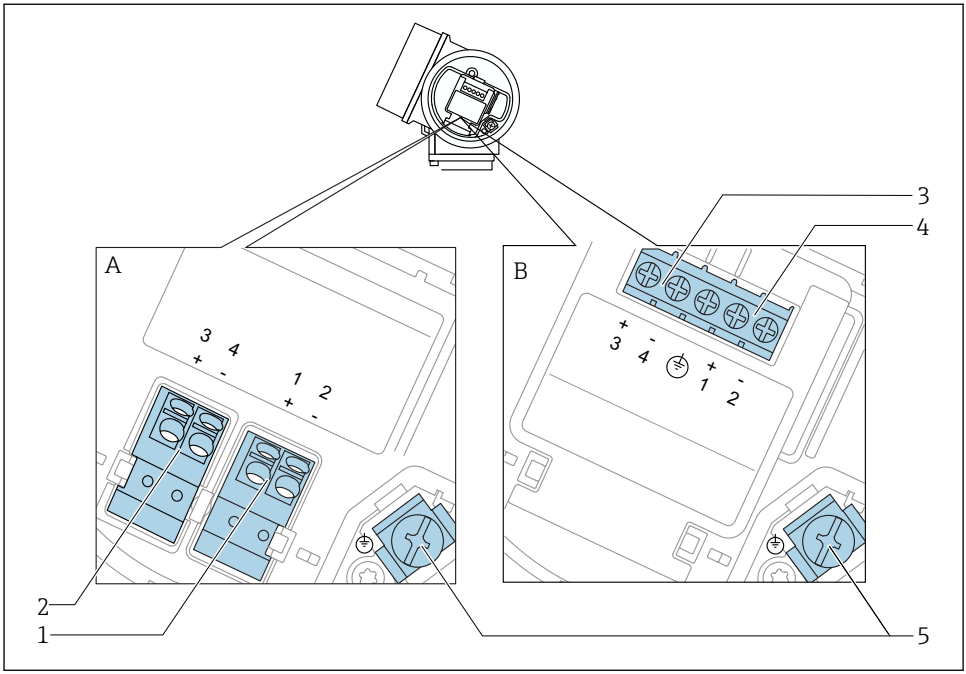

8 Terminal assignment 2-wire: 4-20 mA HART, 4-20 mA

A Without integrated overvoltage protection
B With integrated overvoltage protection
1 Connection current output 1, 4-20 mA HART passive: terminals 1 and 2, without integrated overvoltage protection
2 Connection current output 2, 4-20 mA: terminals 3 and 4, without integrated overvoltage protection
3 Connection current output 2, 4-20 mA: terminals 3 and 4, with integrated overvoltage protection
4 Connection current output 1, 4-20 mA HART passive: terminals 1 and 2, with integrated overvoltage protection
5 Terminal for cable screen

Block diagram 2-wire: 4-20 mA HART, 4-20 mA

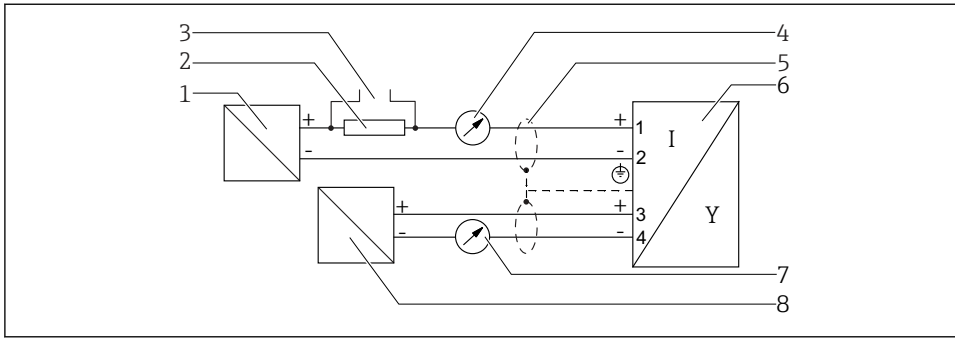

9 Block diagram 2-wire: 4-20 mA HART, 4-20 mA

1 *Active barrier with power supply (e.g. RN221N); observe terminal voltage*
2 *HART communication resistor (≥ 250 Ω); observe maximum load*
3 *Connection for Commubox FXA195 or FieldXpert SFX350/SFX370 (via VIATOR Bluetooth modem)*
4 *Analog display device; observe maximum load*
5 *Cable screen; observe cable specification*
6 *Measuring device*
7 *Analog display device; observe maximum load*
8 *Active barrier with power supply (e.g. RN221N), current output 2; observe terminal voltage*

7.1.2 Device plug connectors

For the versions with fieldbus plug connector (M12 or 7/8"), the signal line can be connected without opening the housing.

Pin assignment of the M12 plug connector

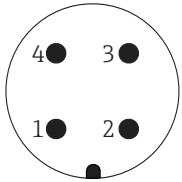

A0011175

Pin	Meaning
1	Signal +
2	not connected
3	Signal -
4	Ground

Pin assignment of the 7/8" plug connector

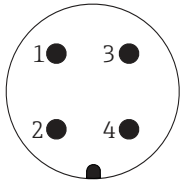

A0011176

Pin	Meaning
1	Signal -
2	Signal +
3	Not connected
4	Screen

7.1.3 Supply voltage

2-wire, 4-20 mA HART, passive

"Power supply, output" [1]	"Approval" [2]	Terminal voltage U at device	Maximum load R, depending on the supply voltage U_0 of the power supply unit
A: 2-wire; 4-20 mA HART	▪ Non-hazardous ▪ Ex nA ▪ Ex ic ▪ CSA GP	14 to 35 V [3]	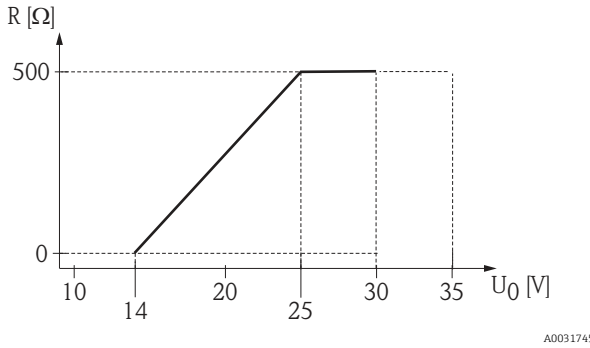
	Ex ia / IS	14 to 30 V [3]	
	▪ Ex d(ia) / XP ▪ Ex ic(ia) ▪ Ex nA(ia) ▪ Ex ta / DIP	14 to 35 V [3] [4]	
	Ex ia + Ex d(ia) / IS + XP	14 to 30 V [3]	

1) Feature 020 in the product structure
2) Feature 010 in the product structure
3) If the Bluetooth modem is used, the minimum supply voltage increases by 2 V.
4) At ambient temperatures $TT_a \leq -20$ °C, a terminal voltage U ≥ 16 V is required to start the device with the minimum failure current (3.6 mA).

"Power supply, output" [1]	"Approval" [2]	Terminal voltage U at device	Maximum load R, depending on the supply voltage U_0 of the power supply unit
B: 2-wire; 4-20 mA HART, switch outpu	▪ Non-hazardous ▪ Ex nA ▪ Ex nA(ia) ▪ Ex ic ▪ Ex ic(ia) ▪ Ex d(ia) / XP ▪ Ex ta / DIP ▪ CSA GP	16 to 35 V [3]	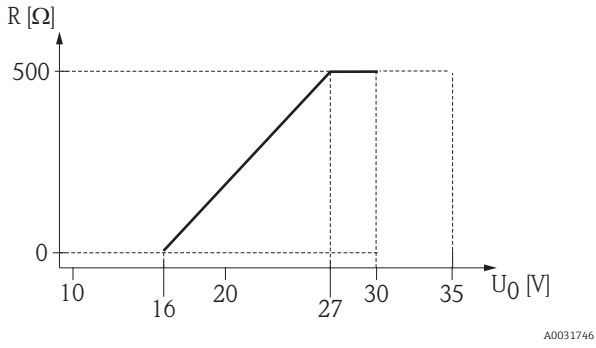
	▪ Ex ia / IS ▪ Ex ia + Ex d(ia) / IS + XP	16 to 30 V [3]	

1) Feature 020 in the product structure
2) Feature 010 in the product structure
3) If the Bluetooth modem is used, the minimum supply voltage increases by 2 V.

"Power supply, output" [1]	"Approval" [2]	Terminal voltage U at device	Maximum load R, depending on the supply voltage U_0 of the power supply unit
C: 2-wire; 4-20 mA HART, 4-20 mA	All	16 to 30 V [3]	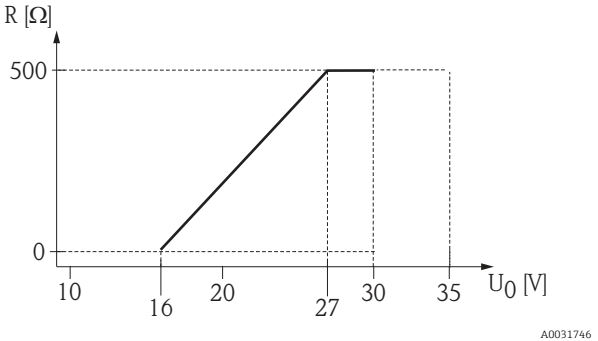

1) Feature 020 in the product structure
2) Feature 010 in the product structure
3) If the Bluetooth modem is used, the minimum supply voltage increases by 2 V.

Integrated polarity reversal protection	Yes
Permitted residual ripple with f = 0 to 100 Hz	U_{SS} < 1 V
Permitted residual ripple with f = 100 to 10 000 Hz	U_{SS} < 10 mV

7.1.4 Overvoltage protection

If the measuring device is used for level measurement in flammable liquids which requires the use of overvoltage protection according to DIN EN 60079-14, standard for test procedures 60060-1 (10 kA, pulse 8/20 µs), an overvoltage protection module has to be installed.

Integrated overvoltage protection module

An integrated overvoltage protection module is available for 2-wire HART devices.

Product structure: Feature 610 "Accessory mounted", option NA "Overvoltage protection".

Technical data	
Resistance per channel	2 × 0.5 Ω max.
Threshold DC voltage	400 to 700 V
Threshold impulse voltage	< 800 V
Capacitance at 1 MHz	< 1.5 pF
Nominal arrest impulse voltage (8/20 µs)	10 kA

External overvoltage protection module

HAW562 or HAW569 from Endress+Hauser are suited as external overvoltage protection.

7.1.5 Connecting the measuring device

WARNING

Risk of explosion!

- ▶ Observe applicable national standards.
- ▶ Comply with the specifications in the Safety Instructions (XA).
- ▶ Use specified cable glands only.
- ▶ Check to ensure that the power supply matches the information on the nameplate.
- ▶ Switch off the power supply before connecting the device.
- ▶ Connect the potential matching line to the outer ground terminal before applying the power supply.

Required tools/accessories:

- For devices with a cover lock: Allen key AF3
- Wire stripper
- When using stranded cables: One ferrule for every wire to be connected.

Opening connection compartment cover

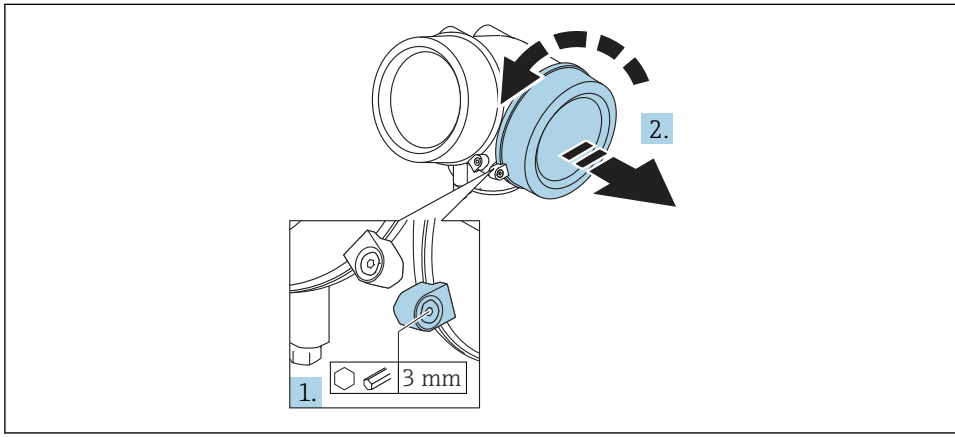

A0021490

1. Loosen the screw of the securing clamp of the connection compartment cover using an Allen key (3 mm) and turn the clamp 90 ° clockwise.
2. Afterwards unscrew connection compartment cover and check lid gasket, replace if necessary.

Connecting

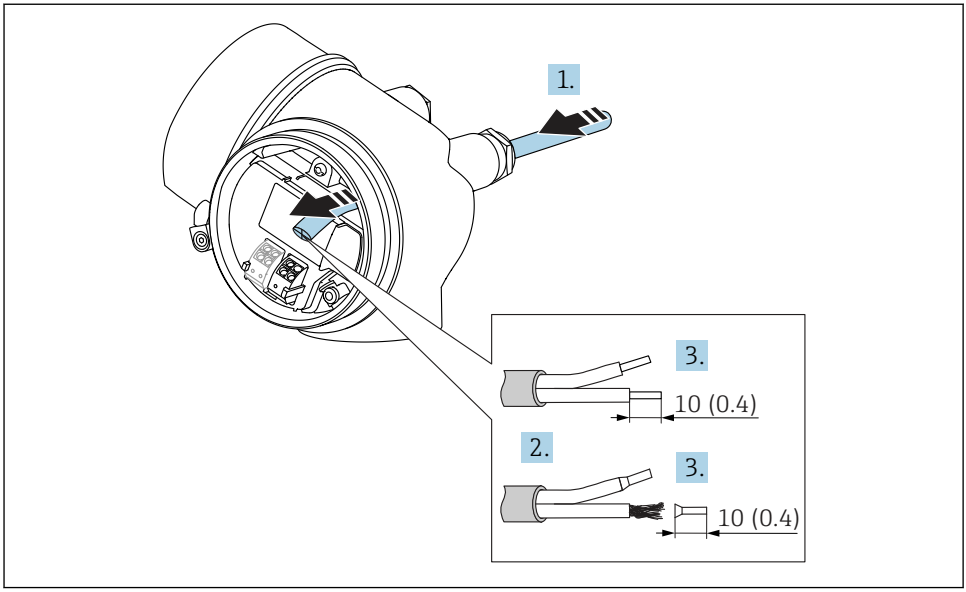

10 Dimensions: mm (in)

1. Push the cable through the cable entry . To ensure tight sealing, do not remove the sealing ring from the cable entry.
2. Remove the cable sheath.
3. Strip the cable ends over a length of 10 mm (0.4 in). In the case of stranded cables, also fit ferrules.
4. Firmly tighten the cable glands.
5. Connect the cable in accordance with the terminal assignment.

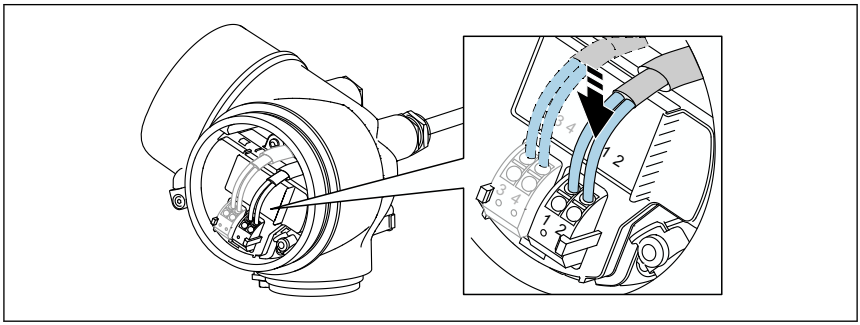

6. If using shielded cables: Connect the cable shield to the ground terminal.

Plug-in spring-force terminals

In the case of devices without integrated overvoltage protection, electrical connection is via plug-in spring-force terminals. Rigid conductors or flexible conductors with ferrules can be inserted directly into the terminal without using the lever, and create a contact automatically.

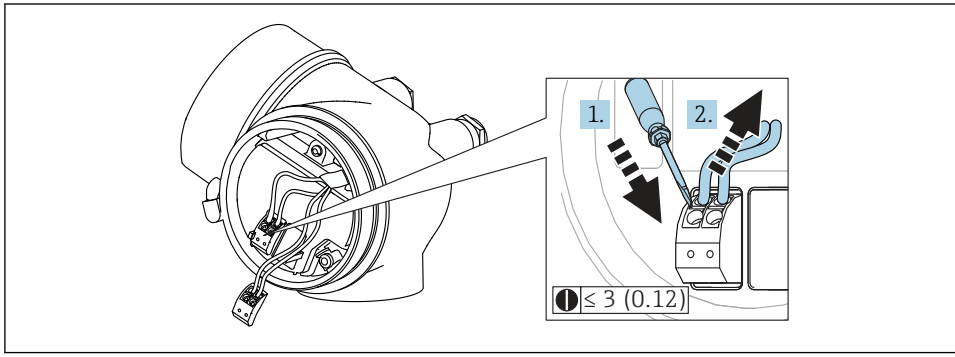

11 *Dimensions: mm (in)*

To remove cables from the terminal:

1. Using a flat-blade screwdriver ≤ 3 mm, press down on the slot between the two terminal holes
2. while simultaneously pulling the cable end out of the terminal.

Closing connection compartment cover

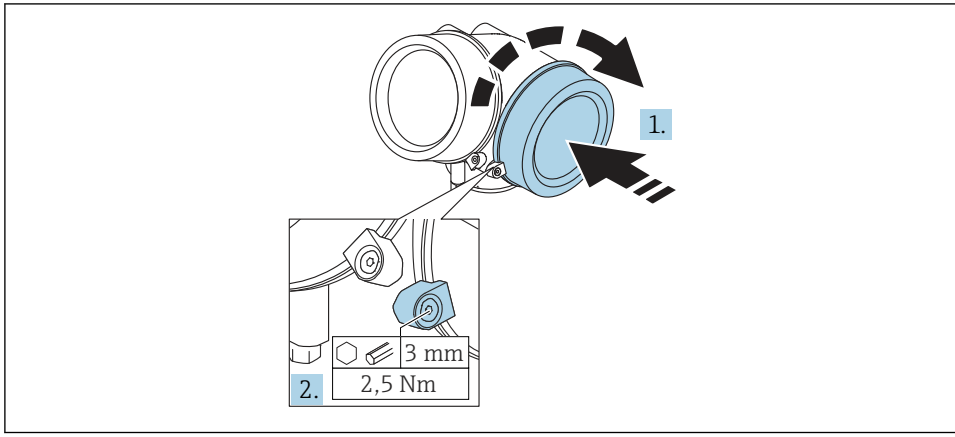

1. Screw back firmly connection compartment cover.

2. Turning securing clamp 90 ° counterclockwise and tighten the clamp with 2.5 Nm (1.84 lbf ft) again using the Allen key (3 mm).

7.1.6 Post-connection check

❑	Is the device or cable undamaged (visual check)?
❑	Do the cables comply with the requirements ?
❑	Do the cables have adequate strain relief?
❑	Are all cable glands installed, securely tightened and leak-tight?
❑	Does the supply voltage match the specifications on the nameplate?
❑	Is the terminal assignment correct?
❑	If required: Has protective ground connection been established ?
❑	If supply voltage is present, is the device ready for operation and do values appear on the display module?
❑	Are all housing covers installed and securely tightened?
❑	Is the securing clamp tightened correctly?

8 Commissioning via SmartBlue (app)

8.1 Requirements

Device requirements
Commissioning via SmartBlue is only possible if the device has a Bluetooth module.

System requirements SmartBlue
SmartBlue is available as download for Android devices from the Google Play Store and for iOS devices from the iTunes Store.
- iOS devices:
  iPhone 4S or higher from iOS9.0; iPad2 or higher from iOS9.0; iPod Touch 5th generation or higher from iOS9.0
- Devices with Android:
  from Android 4.4 KitKat and *Bluetooth*® 4.0

Initial password
The ID of the Bluetooth module serves as the initial password used to establish the first connection to the device. It can be found:
- on the information sheet which is supplied with the device. This serial number specific sheet is also stored in W@M.
- on the nameplate of the Bluetooth module.

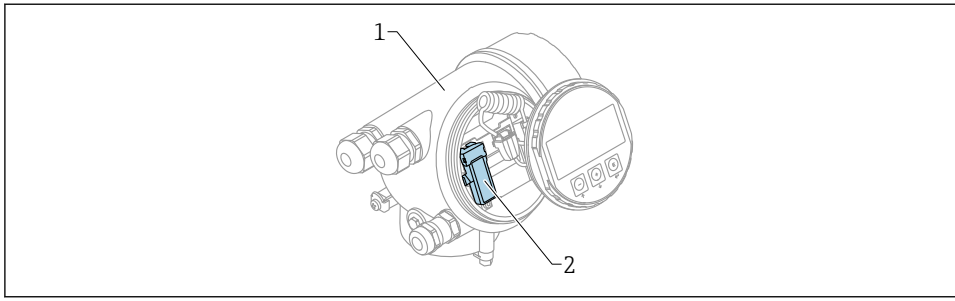

12 *Device with Bluetooth module*

1 *Electronics housing of the device*
2 *Nameplate of the Bluetooth module; the ID on this nameplate serves as initial password.*

All login data (including the password changed by the user) are not stored in the device but in the Bluetooth module. This must be taken into account when the module is removed from one device and inserted into a different device.

8.2 Commissioning

Download and install SmartBlue

1. To download the app, scan the QR code or enter "SmartBlue" in the search field



13 *Download link*

2. Start SmartBlue



14 *SmartBlue pictogram*

3. Select device from displayed livelist (available devices only)

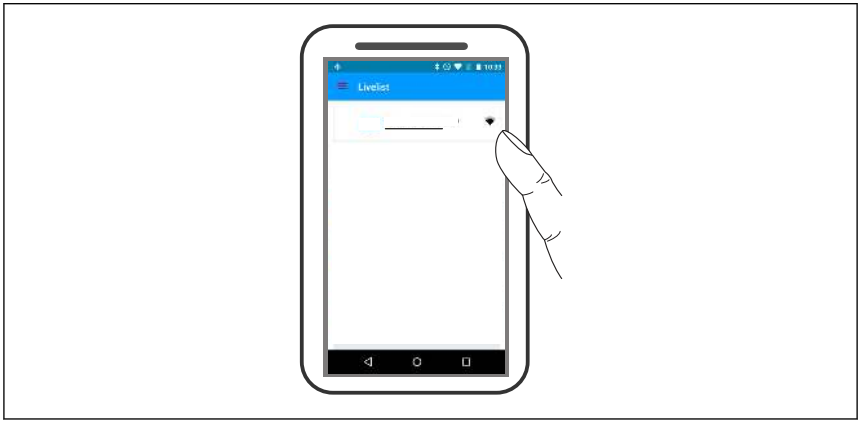

A0029502

15 *Livelist*

Only one point-to-point connection can be established between **one** sensor and **one** smartphone or tablet.

4. Perform login

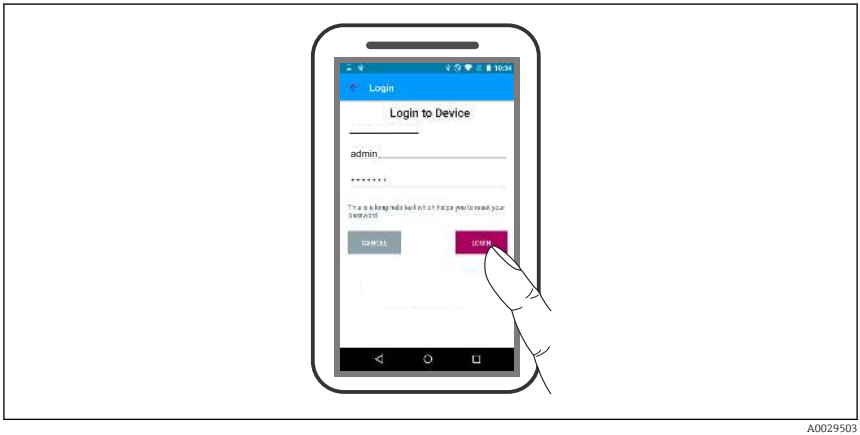

A0029503

16 *Login*

5. Enter user name -> admin
6. Enter initial password -> ID of the Bluetooth module
7. Change the password after logging in for the first time

8. By wiping from the side, additional information (e.g. main menu) can be dragged into the image

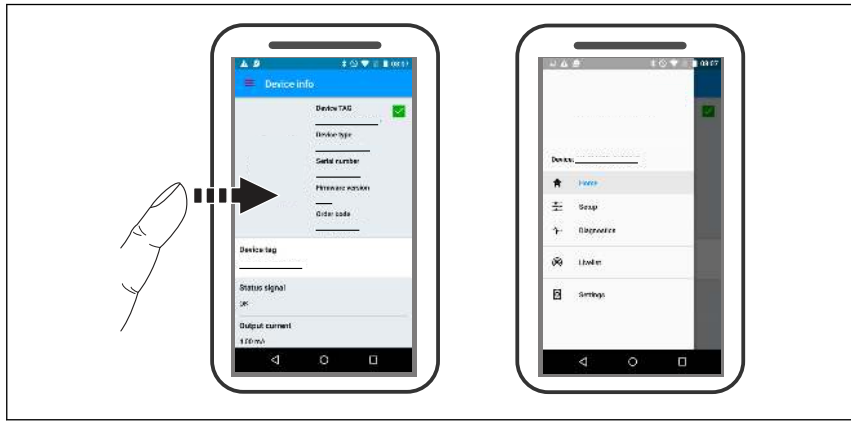

A0029504

17 *Main menu*

Envelope curves can be displayed and recorded

Additionally to the envelope curve, the following values are displayed:

- D = Distance
- L = Level
- A = Absolute amplitude

- In the case of screenshots, the displayed section (zoom function) is saved
- In video sequences, always the whole area without zoom function is saved

It is also possible to send envelope curves (video sequences) using the relevant smartphone or tablet functions.

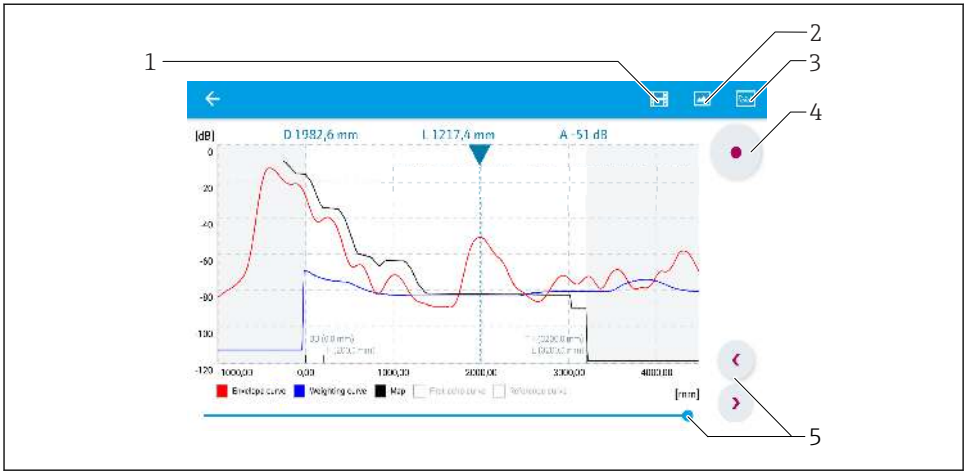

A0029486

18 *Envelope curve display (example) in SmartBlue; Android view*

1 *Record video*
2 *Create screenshot*
3 *Navigation to mapping menu*
4 *Start / stop video recording*
5 *Move time on time axis*

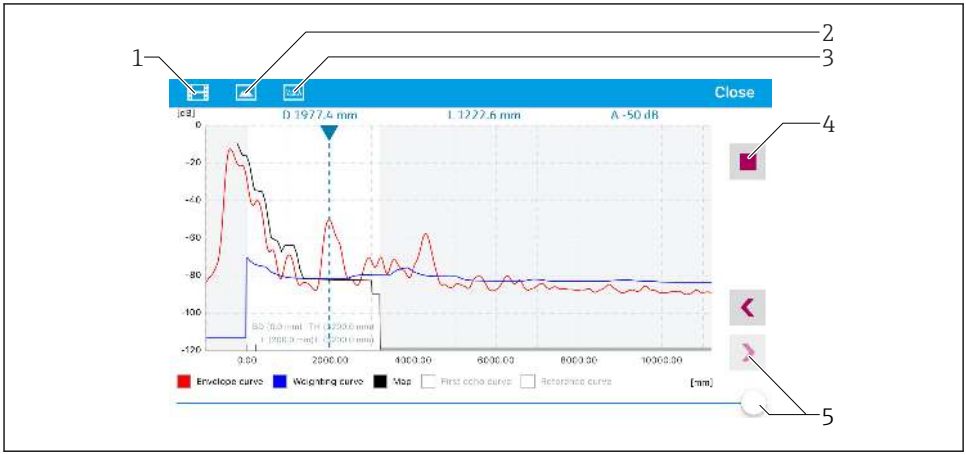

A0029487

19 *Envelope curve display (example) in SmartBlue; IoS view*

1 *Record video*
2 *Create screenshot*
3 *Navigation to mapping menu*
4 *Start / stop video recording*
5 *Move time on time axis*

9 Commissioning via wizard

A wizard guiding the user through the initial setup is available in FieldCare and DeviceCare [1].

1. Connect the device to FieldCare or DeviceCare (for details refer to the "Operating options" chapter of the Operating Instructions).
2. Open the device in FieldCare or DeviceCare.
   ↳ The dashboard (home page) of the device appears:

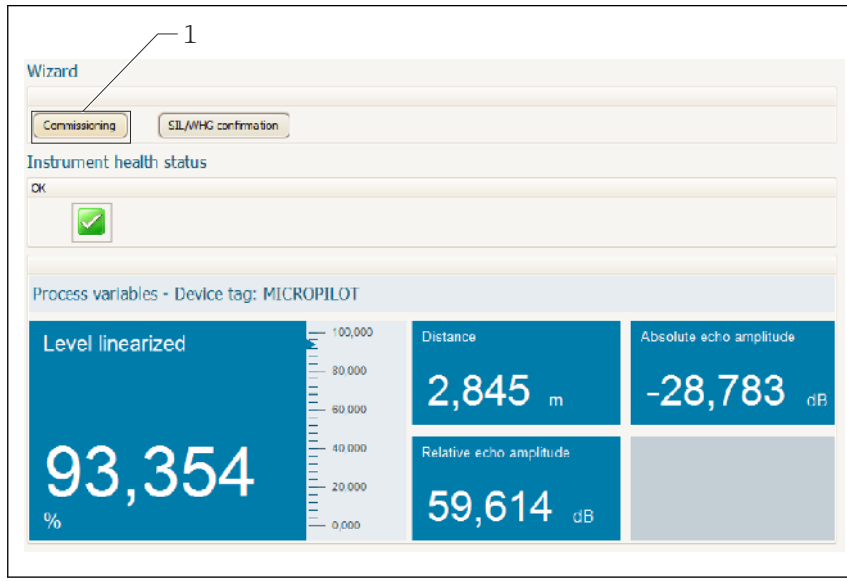

A0027720

1 "Commissioning" button calls up the wizard.

3. Click on "Commissioning" to call up the wizard.
4. Enter or select the appropriate value for each parameter. These values are immediately written to the device.
5. Click "Next" to switch to the next page.
6. After finishing the last page, click "End of sequence" to close the wizard.

If the wizard is cancelled before all necessary parameters have been set, the device may be in an undefined state. A reset to the default settings is recommended in this case.

1) DeviceCare is available for download at www.software-products.endress.com. The download requires a registration in the Endress+Hauser software portal.

10 Commissioning (via operating menu)

10.1 Display and operating module

10.1.1 Display appearance

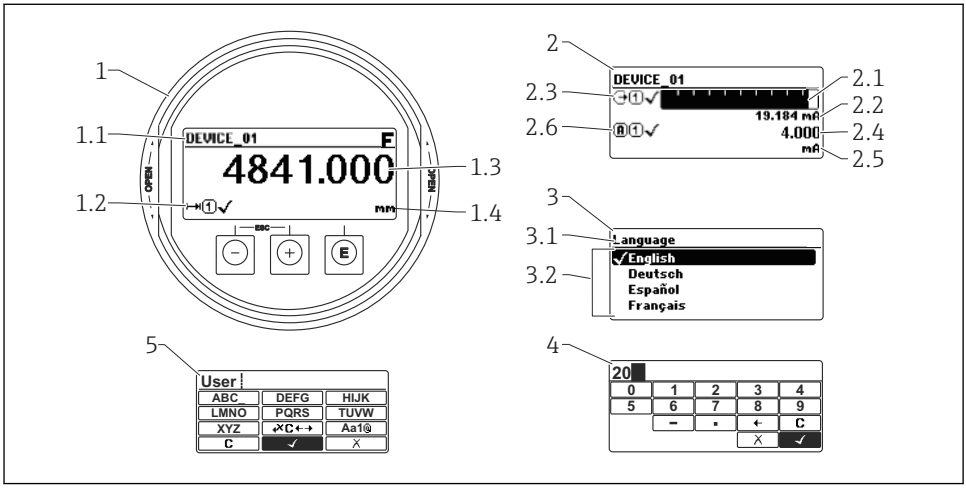

A0012635

20 Appearance of the display and operation module for on-site operation

1 Measured value display (1 value max. size)
1.1 Header containing tag and error symbol (if an error is active)
1.2 Measured value symbols
1.3 Measured value
1.4 Unit
2 Measured value display (1 bargraph + 1 value)
2.1 Bargraph for measured value 1
2.2 Measured value 1 (including unit)
2.3 Measured value symbols for measured value 1
2.4 Measured value 2
2.5 Unit for measured value 2
2.6 Measured value symbols for measured value 2
3 Representation of a parameter (here: a parameter with selection list)
3.1 Header containing parameter name and error symbol (if an error is active)
3.2 Selection list; ☑ marks the current parameter value.
4 Input matrix for numbers
5 Input matrix for alphanumeric and special characters

10.1.2 Operating elements

Key	Meaning
 A0018330	**Minus key** *For menu, submenu* Moves the selection bar upwards in a picklist. *For text and numeric editor* In the input mask, moves the selection bar to the left (backwards).
 A0018329	**Plus key** *For menu, submenu* Moves the selection bar downwards in a picklist. *For text and numeric editor* In the input mask, moves the selection bar to the right (forwards).
 A0018328	**Enter key** *For measured value display* ▪ Pressing the key briefly opens the operating menu. ▪ Pressing the key for 2 s opens the context menu. *For menu, submenu* ▪ Pressing the key briefly Opens the selected menu, submenu or parameter. ▪ Pressing the key for 2 s for parameter: If present, opens the help text for the function of the parameter. *For text and numeric editor* ▪ Pressing the key briefly – Opens the selected group. – Carries out the selected action. ▪ Pressing the key for 2 s confirms the edited parameter value.
 A0032909	**Escape key combination (press keys simultaneously)** *For menu, submenu* ▪ Pressing the key briefly – Exits the current menu level and takes you to the next higher level. – If help text is open, closes the help text of the parameter. ▪ Pressing the key for 2 s returns you to the measured value display ("home position"). *For text and numeric editor* Closes the text or numeric editor without applying changes.
 A0032910	**Minus/Enter key combination (press and hold down the keys simultaneously)** Reduces the contrast (brighter setting).
 A0032911	**Plus/Enter key combination (press and hold down the keys simultaneously)** Increases the contrast (darker setting).

10.1.3 Opening the context menu

Using the context menu, the user can call up the following menus quickly and directly from the operational display:

- Setup
- Conf. backup disp.
- Env.curve
- Keylock on

Opening and closing the context menu

The user is in the operational display.

1. Press E for 2 s.
   ↳ The context menu opens.

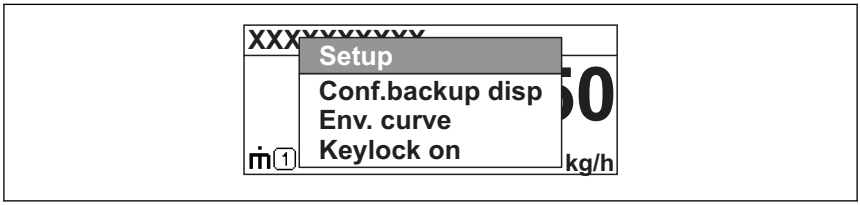

A0033110-EN

2. Press − + + simultaneously.
   ↳ The context menu is closed and the operational display appears.

Calling up the menu via the context menu

1. Open the context menu.
2. Press + to navigate to the desired menu.
3. Press E to confirm the selection.
   ↳ The selected menu opens.

10.2 Operating menu

Parameter/Submenu	Meaning	Description
Language Setup → Advanced setup → Display → Language	Defines the operating language of the on-site display.	BA01618F (FMR60, HART)
Setup	When appropriate values have been assigned toall setup parameters, the measured should be completely configured in a standard application.	
Present mapping Setup → Mapping → Present mapping	Interference echo suppression	
Advanced setup Setup → Advanced setup	Contains further submenus and parameters: ▪ to adapt the device to special measuring conditions. ▪ to process the measured value (scaling, linearization). ▪ to configure the signal output.	
Diagnostics	Contains the most important parameters needed to detect and analyze operational errors.	
Expert [1)]	Contains all parameters of the device (including those which are already contained in one of the above submenus). This menu is organized according to the function blocks of the device.	GP01101F (FMR6x, HART)

1) By entering the "Expert" menu, an access code is always requested. If a customer specific access code has not been defined, "0000" has to be entered.

10.3 Unlock the device

If the device has been locked, it must be unlocked before the measurement can be configured.

For details refer to the Operating Instructions of the device:
BA01618F (FMR60, HART)

10.4 Setting the operating language

Factory setting: English or ordered local language

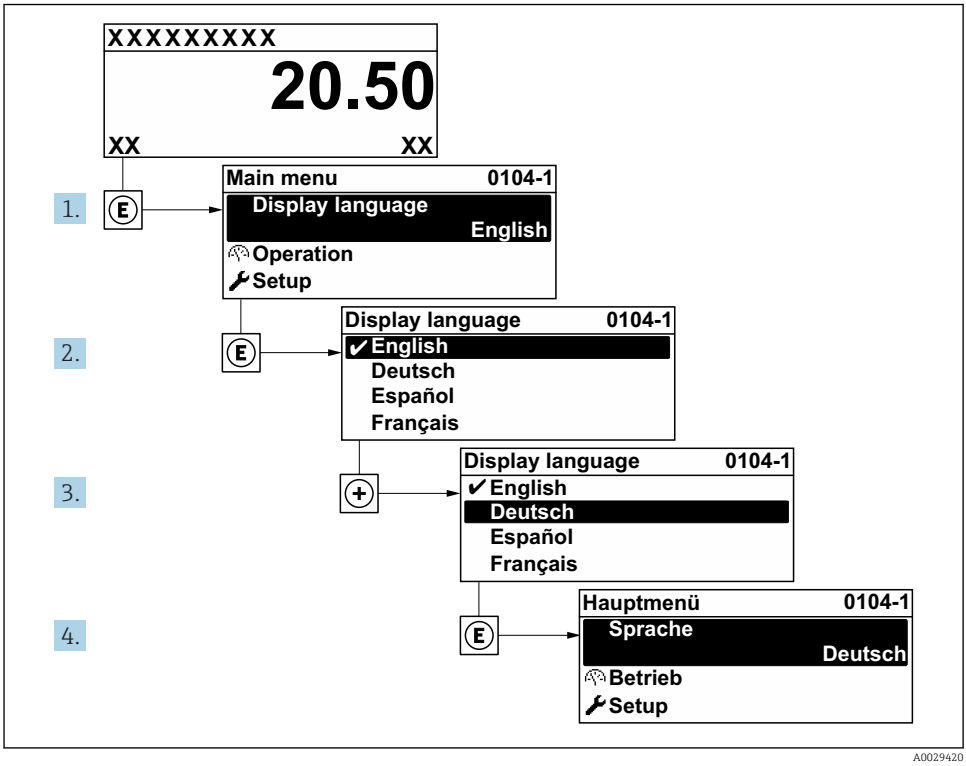

21 Using the example of the local display

10.5 Configuration of a level measurement

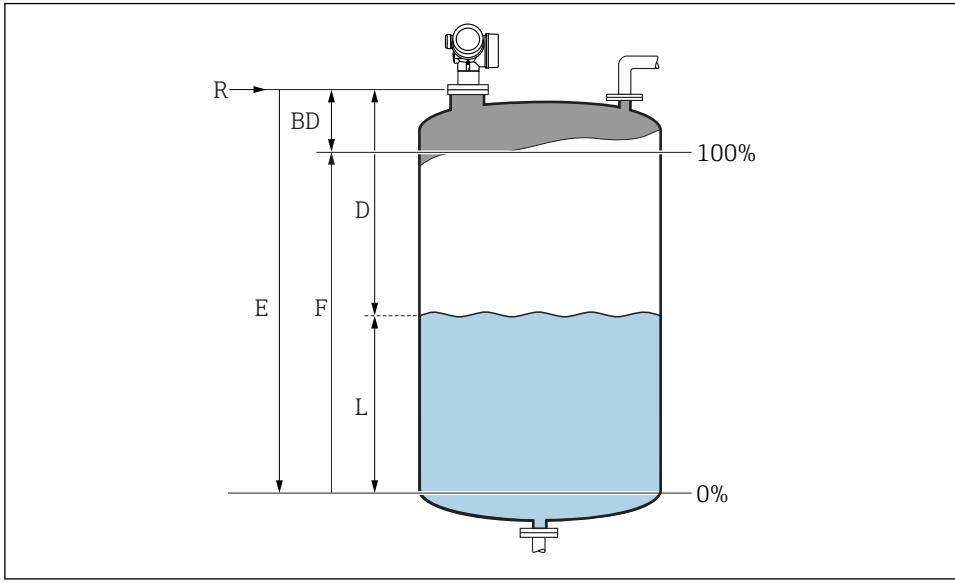

22 *Configuration parameters for level measurements in liquids*

R Reference point of the measurement
D Distance
L Level
E Empty calibration (= zero)
F Full calibration (= span)

1. Setup → Device tag
   ↳ Enter device tag.
2. Setup → Distance unit
   ↳ Select distance unit.
3. Setup → Tank type
   ↳ Select tank type.
4. Setup → Medium group
   ↳ Specify medium group ("Water based": ε_r >4 or "Others": ε_r >1,9).
5. Setup → Empty calibration
   ↳ Enter empty distance E (Distance from reference point R to the 0% level)

6. If the measuring range covers only an upper part of the tank or silo (E is much less-than the tank/silo height), it is mandatory to enter the acutal tank or silo height into the parameter. If there is an outlet cone, the tank or silo height should not be adjusted as usually E is not much less-than the tank/silo height in these applications.
   Setup → Advanced setup → Level → Tank/silo height
7. Setup → Full calibration
   ↳ Enter full distance F (Distance from the 0% to the 100% level).
8. Setup → Level
   ↳ Indicates the measrued level L.
9. Setup → Distance
   ↳ Indicates the measured distance from the reference point R to the level L.
10. Setup → Signal quality
    ↳ Indicates the quality of the evaluated level echo.
11. Setup → Mapping → Confirm distance
    ↳ Compare distance indicated on the display to real distance in order to start the recording of an interference echo map.
12. Setup → Advanced setup → Level → Level unit
    ↳ Select level unit: %, m, mm, ft, in (Factory setting: %)

The response time of the device is preset by the **"Tank type" parameter**. An enhanced setting is possible in the **"Advanced setup" submenu**.

10.6 User-specific applications

For details of setting the parameters of user-specific applications, see separate documentation:
BA01618F (FMR60, HART)

For the **Expert** menu see:
GP01101F (Description of Device Parameters, FMR6x, HART)



www.addresses.endress.com

Endress+Hauser

People for Process Automation