Level | Pressure | Flow | Temperature | Liquid Analysis | Registration | Systems Components | Services | Solutions

Technical Information

Fieldgate Solution FXA360, FXA560

Gateway for Remote Monitoring of Sensors and Actuators via Web Browsers
Completely assembled and wired cabinet

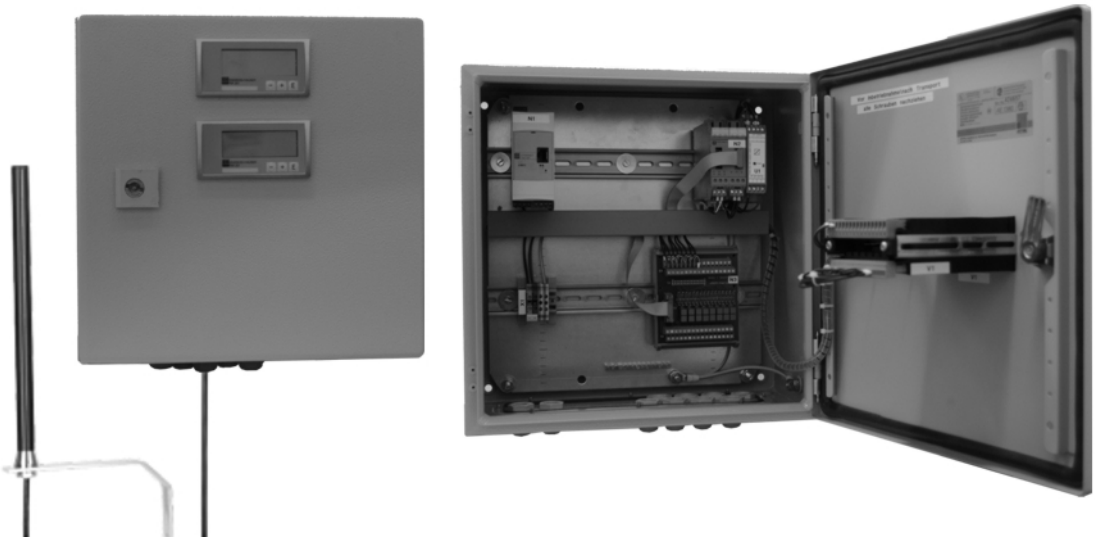

Application

Fieldgate Solutions FXA360 and FXA560 are completely installed and wired cabinets for applications in the area of inventory control. Using the integrated telemetry unit Fieldgate FXA320 or FXA520, inventory data from geographically widely distributed tanks or silos can be transmitted to an inventory management system using Internet technology. Up to 30 transmitters can be connected to Fieldgate FXA560, whereby both passive (2-wire) and active (4-wire) transmitters can be connected. The size of the cabinet depends on the number of transmitters to be connected, see Ordering Information.

Your benefits

- Quick and cost-effective commissioning with completely assembled and wired cabinet.
- Customer-specific solutions mean that you order and pay for the exact configuration you need for your application, no more and no less.
- Remote monitoring via modem, Ethernet or GSM/ GPRS.
- Visualisation with web browser or WAP-enabled mobile phone.
- Intrinsically safe version for applications in explosion hazardous areas.
- Up to 30 HART transmitters can be connected.
- Limit monitoring with alarms via e-mail or SMS.

TI00030S/04/en
71154148

Endress+Hauser
People for Process Automation

Table of contents

Applications . . . 3
Vendor Managed Inventory . . . 3

Communication interface . . . 4
Internet connection . . . 4
Ethernet . . . 4
Telephone network (analogue) . . . 4
Mobile communications network (GSM) . . . 5
GPRS support . . . 5

Function and system design . . . 6
Measuring system . . . 6

Input . . . 11
Analogue 4...20 mA inputs (FXA360 only) . . . 11
HART channel 1&2 (FXA560 only) . . . 11
Binary inputs . . . 12
RN221N Active barrier . . . 12
RNS221 Transmitter power supply . . . 12
Multiplexer interface module . . . 12

Power supply . . . 13
Supply voltage . . . 13
Cable entry . . . 13
Connection types FXA360 . . . 13
Connection types FXA560 . . . 15

Operating conditions: Environment . . . 21
Permitted ambient temperatures . . . 21
Storage temperature . . . 21
Ingress protection . . . 21

Mechanical construction . . . 22
Design, dimensions . . . 22
Terminals in the cabinet . . . 23
Plug-in connections . . . 23

Human interface . . . 24
Display elements at Fieldgate FXA360/560 . . . 24
Operating elements at Fieldgate FXA360/560 . . . 24
Operation concept . . . 25

Certificates and approvals . . . 27
CE mark . . . 27
Ex-approval . . . 27
Explosion protection . . . 27
Other standards and guidelines . . . 27

Telecommunications Regulatory Compliance . . . 28
Fieldgate analogue version . . . 28
Fieldgate GSM version . . . 28

Ordering information . . . 29
Fieldgate Solution FXA360 . . . 29
Fieldgate Solution FXA560 . . . 30
Fieldgate Solution FXA560 (continued) . . . 31

Accessories . . . 32
DAT module . . . 32
PC cable . . . 32
Telephone cable . . . 32
Fieldgate OPC server . . . 32
Java applets . . . 32
Antenna . . . 32
HART Client (FXA560 only) . . . 32
Multiplexer (FXA560 only) . . . 33
E+H power supply units (FXA560 only) . . . 33
E+H Multidrop Connector FXN520 (FXA560 only) . . . 33
24 V switched-mode power supply (Phoenix) . . . 33
Process display RIA251 . . . 33
Process display OC7421 . . . 33
Fieldgate FXA320 . . . 33
Fieldgate FXA520 . . . 33

Documentation . . . 34
Operating Instructions . . . 34
Certificates . . . 34
Accessories . . . 34

Applications

Vendor Managed Inventory

By using Fieldgates to interrogate tank or silo levels remotely, suppliers of raw materials can provide their regular customers with information about the current supplies at any time and, for example, account for them in their own production planning. For their part, the Fieldgates monitor the configured level limits and, if required, automatically activate the next delivery. The spectrum of options ranges from a simple purchasing requisition via e-mail through to fully automatic order administration by coupling XML data into the Enterprise Resource Planning (ERP) systems on both sides of the supply chain.

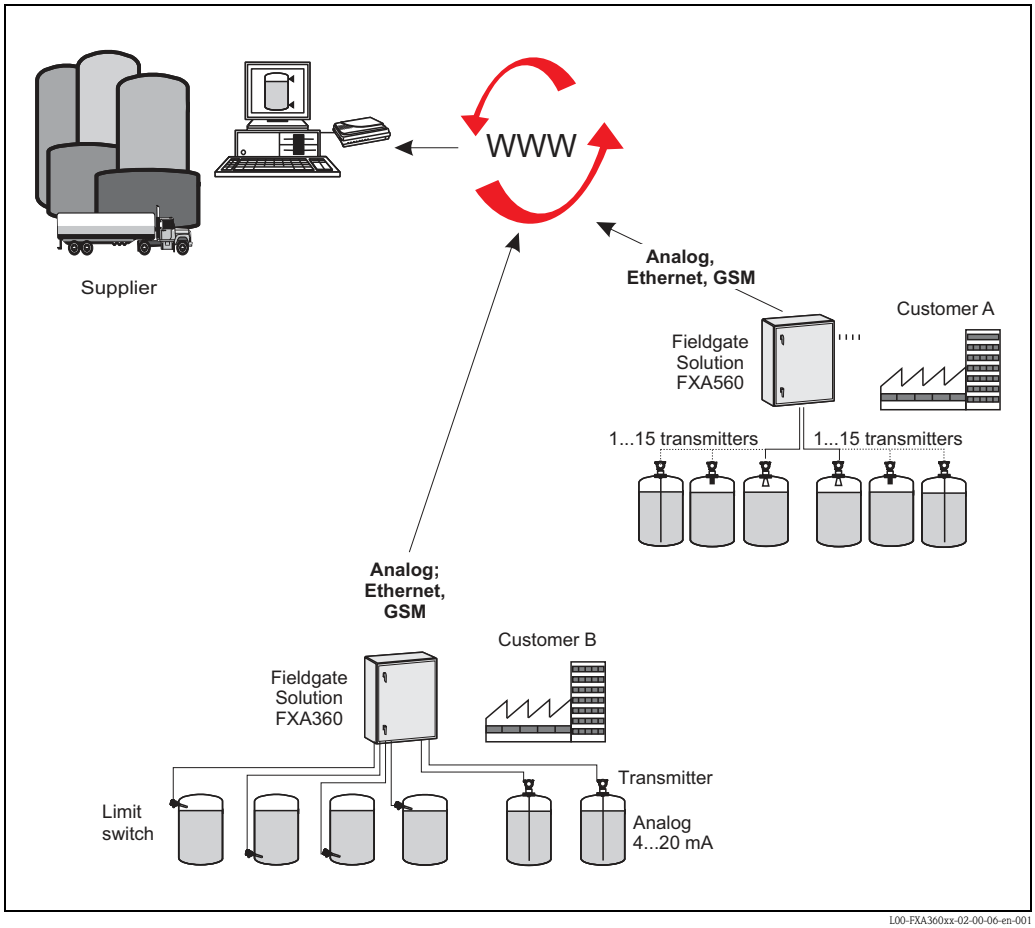

L00-FXA360xx-02-00-06-en-001

Communication interface

Internet connection

If the Fieldgate dials into the Internet permanently via an Internet Service Provider, it is also possible for several users to access the Fieldgate simultaneously when using an analogue/GSM version. The other advantage is that the respective user does not require a modem as a receiver at the work place.

Ethernet

The 10 Base T Ethernet interface with RJ45 plug-in connection can be connected to the local network using a hub or switch. A standard network cable is used for this. In Ethernet operation, you always have access to the Fieldgate with a standard web browser, since the device is constantly available in the network. Several PCs can access the Fieldgate simultaneously.

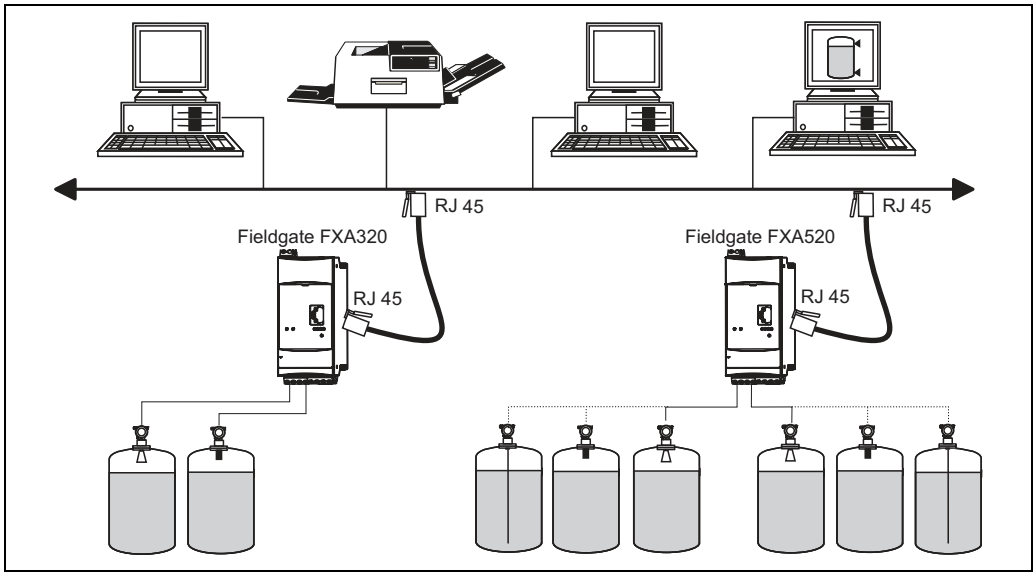

L00-FXA520xx-02-00-06-en-003

Telephone network (analogue)

The Fieldgate is connected to the available telephone network via an RJ11 (PSTN) plug connector. This form of communication is always a point-to-point connection and only one PC can communicate with the device at any one time. In this configuration, the Fieldgate has to be selected before each access, so that it is ready for online operation. For example, the Windows internal telecommunications network can be used for dialling. After this, the Fieldgate can be accessed with a standard web browser (e.g. Internet Provider).
The Fieldgate is also capable of dialling itself into a central server, in order to deliver periodic measured values for example. Here, it is also possible to transfer the measured values via the Internet using an Internet Service Provider.

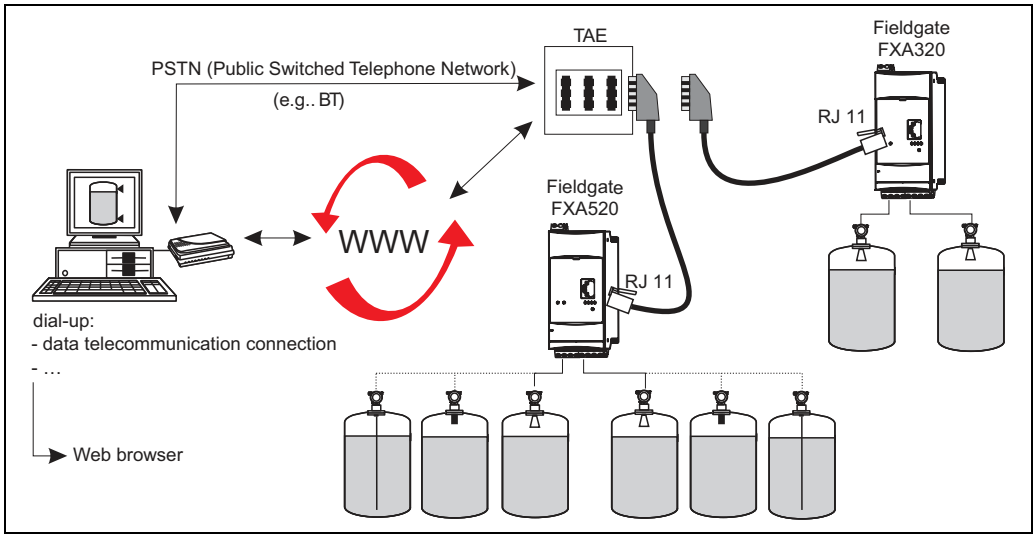

L00-FXA520xx-02-00-06-en-004

Mobile communications network (GSM)

If there is no Ethernet or telephone network available in the Fieldgate's operating location, the data can also be transferred via GSM using the mobile communications network. This communication version can be configured as a point-to-point connection or as freely accessible via the Internet/Intranet. A SIM card from a mobile communications network operator is required for GSM operation. Communication takes place via the data channel of the SIM card, which may require additional activation, depending on the GSM provider.

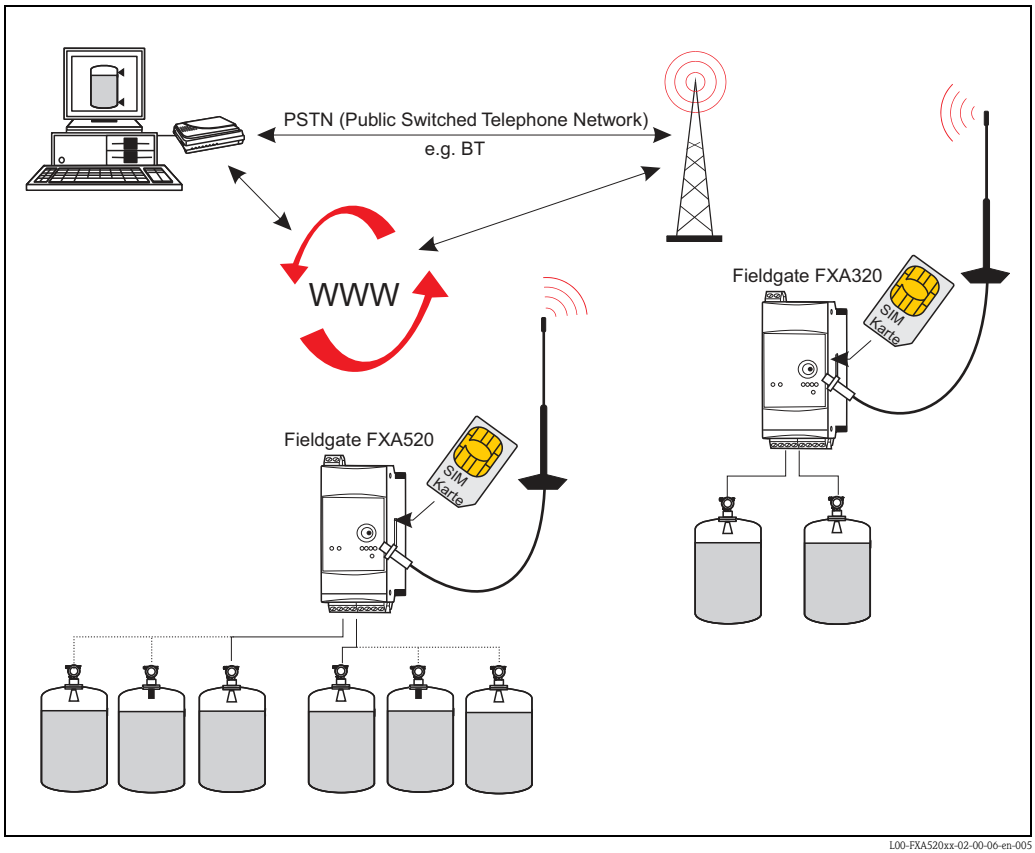

L00-FXA520xx-02-00-06-en-005

GPRS support

GPRS (General Packet Radio Services) is a mobile communications technique, which exploits the advantages of packet-oriented data transmission and channel bundling. In contrast to normal GSM connections, no complete channel is reserved for the duration of the connection between the mobile device and the basis station, rather the data is packed into packets, which can be sent depending on requirement and capacity. Data transmission in packets enables not only greater transmission rates but also always-on-operation. The Fieldgate is thus permanently in a position to connect to the Internet, an Intranet or a mailbox, whereby data is only transferred as required if a new e-mail is sent or a new Internet page is called up. Here, you are only charged for the amount of data actually transmitted (and not for connection time).

The GPRS mode of the Fieldgate GSM thus offers the easiest and most cost-effective option for connecting a measuring point permanently to the Internet or an Intranet. Thanks to always-on-operation, the WAP functions of the Fieldgate can also be used easily and cost-effectively.

To use the available GPRS functions, the GSM/GPRS provider will need to allocate a public IP address. It will be necessary to determine in each individual case, whether this additional service is offered by the respective operator.

Function and system design

Measuring system

Fieldgate Solution FXA360 - with Fieldgate FXA320

- Two transmitters can be connected directly.
- Active/passive current input pre-set according to order.
- Display for 4...20 mA current input (optional).
- Intrinsically safe inputs (optional).

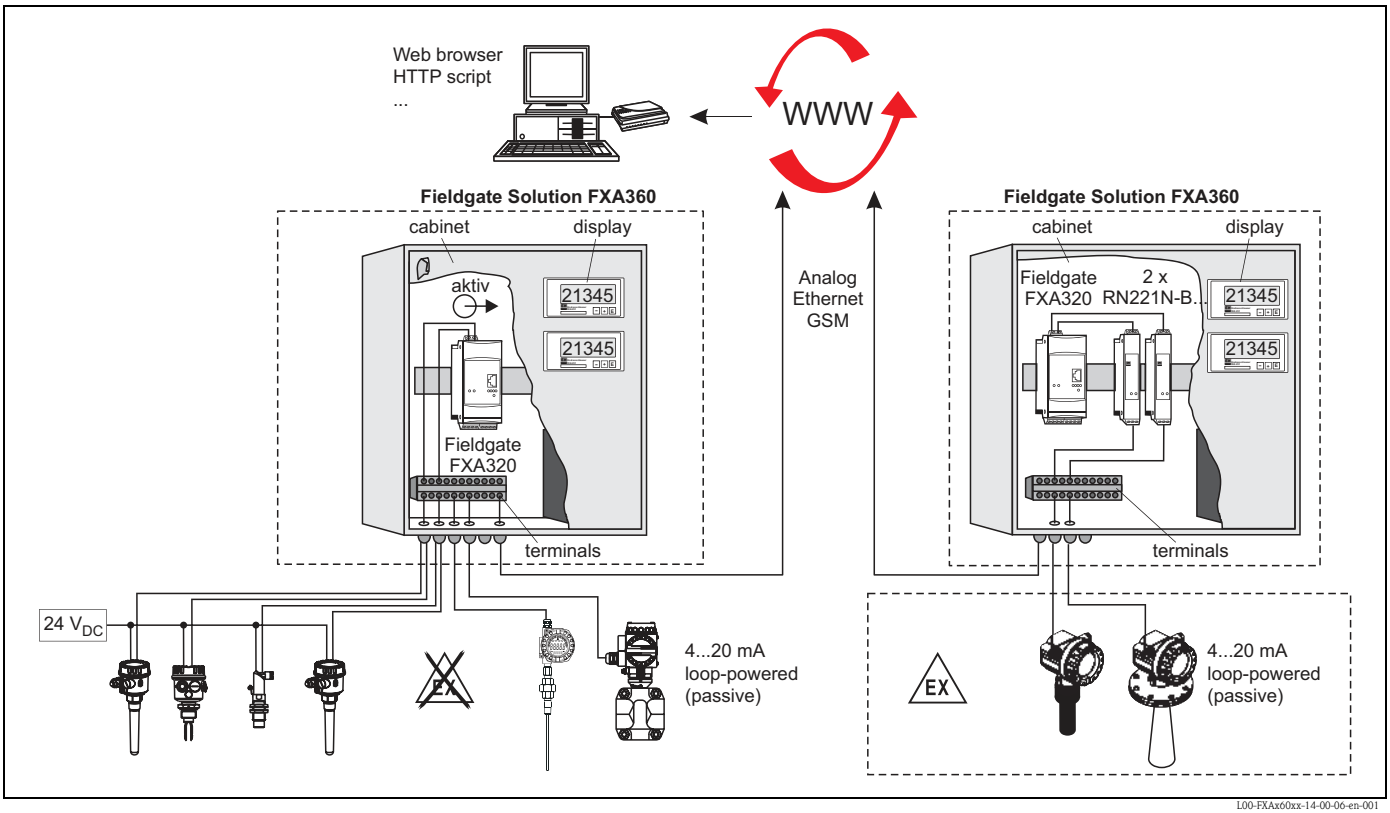

The following can be connected to the FXA360:
- Max. 2 transmitters (to the 4...20 mA analogue input)
- 4 transmitters (to the four binary inputs with event counter function and frequency measurement)

Active or passive current inputs can be selected in the sales structure.
- For example, 2-channel active means:
  both channels are supplied with voltage and are suitable for two-wire 4...20 mA transmitters (loop-powered).
- For example, 2-channel passive means:
  both channels are configured for connection to four-wire transmitters with active current output.

The two channels always have galvanic isolation. Optionally, the current inputs can be ordered with intrinsically safe explosion protection. The optional display RIA251 (display range -19,999 to 99,999) is looped into the 4...20 mA circuit.

The following cabinet sizes are available:

Dimensions / material	Approval	Number of channels	With galvanic isolation	Number of displays
300 x 300 x 210 mm / steel	Hazardous/non-hazardous area	2	Yes	Max. 2
300 x 400 x 200 mm / plastic	Hazardous/non-hazardous area	2	Yes	Max. 2

Note!
For connection, see "Connection types FXA360" on Page 13.

Fieldgate Solution FXA560 - with Fieldgate FXA520 (2-channel HART)

- Two transmitters can be connected directly.
- Can also be used in hazardous areas.
- Suitable for use in 4...20 mA SIL 2 Loops (IEC 61508)

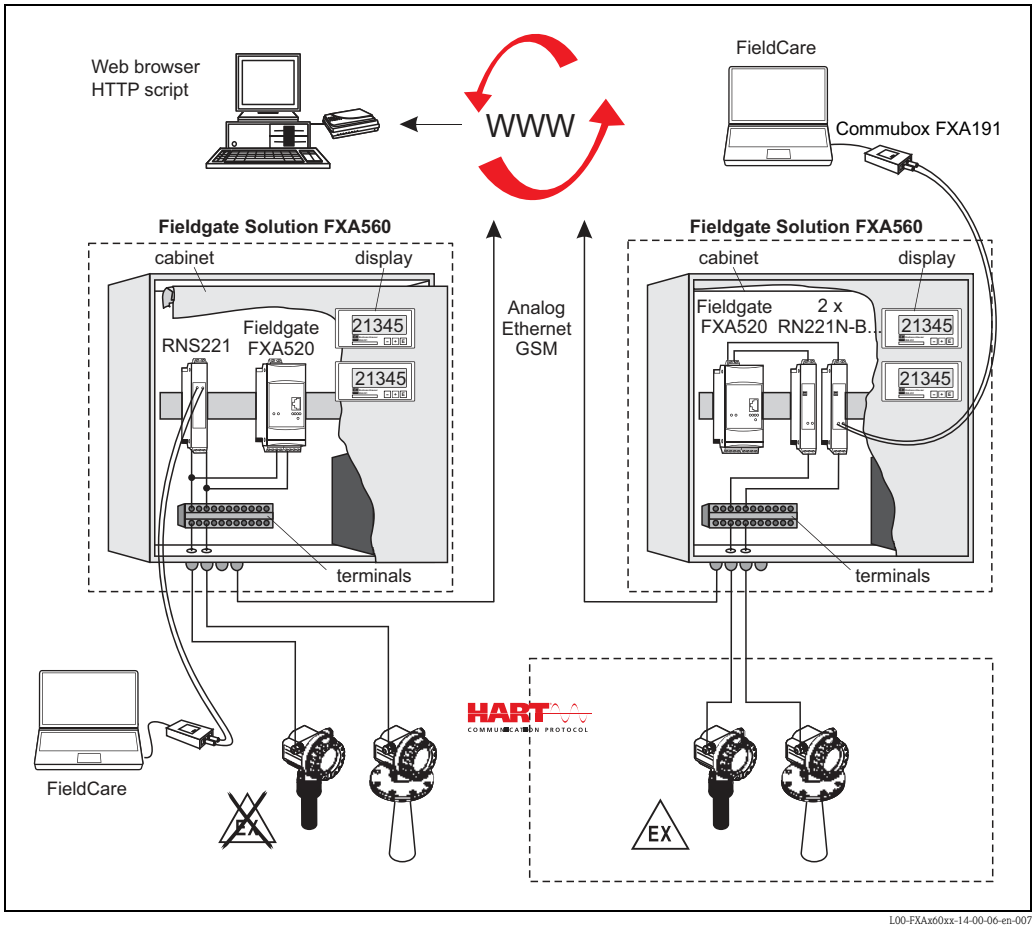

In the 2-channel HART connection type, a maximum of 2 transmitters can be connected with the HART protocol. Optionally, the transmitters can be supplied with voltage. If 4-wire transmitters with active current output will be connected, "none" must be selected under "sensor power supply" in the order. The two channels always have galvanic isolation.

The following cabinet sizes are available:

Dimensions / material	Approval	Number of channels	Power supply with galvanic isolation	Number of displays
300 x 300 x 210 mm / steel	Hazardous/non-hazardous area	2	Yes	Max. 2
300 x 400 x 200 mm / plastic	Hazardous/non-hazardous area	2	Yes	Max. 2

Note!
For connection, see "Connection types FXA560/2-channel connection, active" on Page 15.

Fieldgate Solution FXA560 - with Fieldgate FXA520 (HART Multiplexer)

- HART Multiplexer, such as the KFD2-HMM-16 from Pepperl + Fuchs.
- Up to 30 transmitters (2 x 15) can be connected.

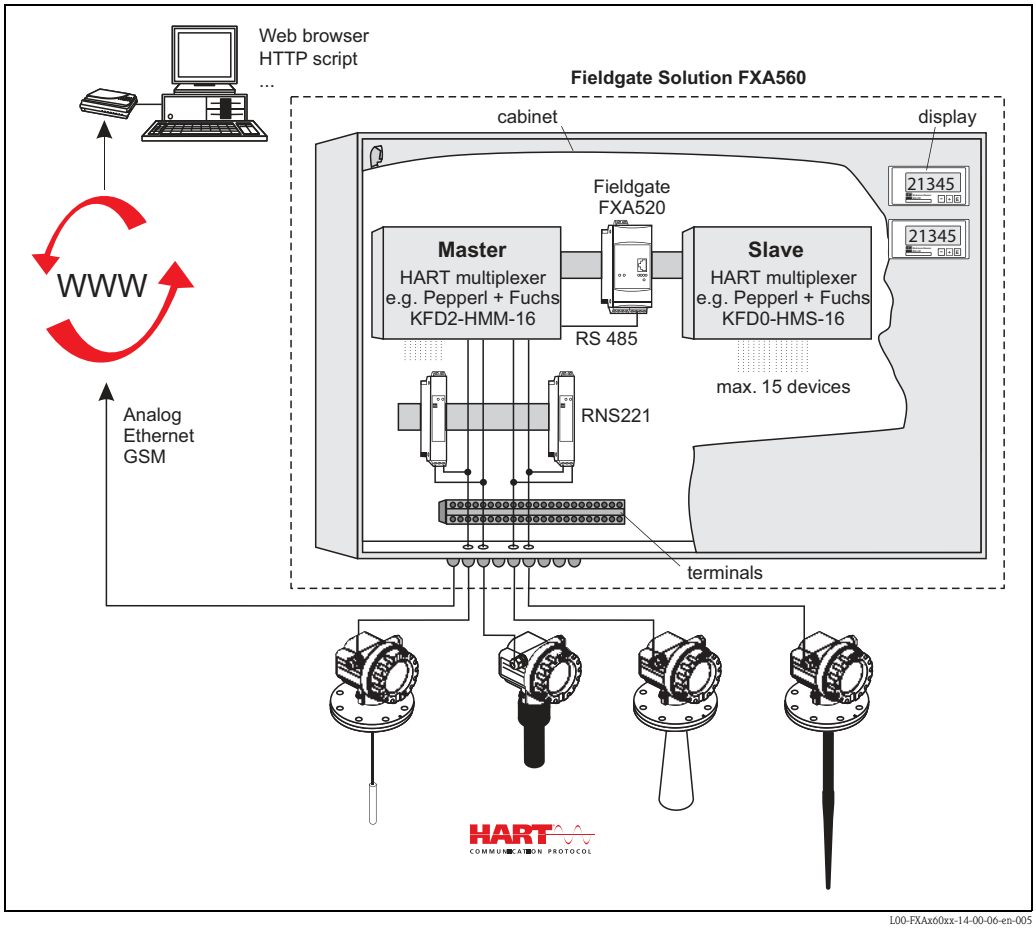

In the "HART Multiplexer" connection type, a maximum of 30 transmitters can be connected. Both transmitters with active and passive current outputs can be connected. If, for example, "active/passive" is selected as the connection type, either active or passive current outputs can be connected. Optionally, the transmitters can also be supplied with power.

The following options are available:
- Without galvanic isolation (all transmitters are supplied by one voltage source and thus are galvanically bonded to each other).
- With galvanic isolation (each transmitter is supplied by one transmitter power supply. Therefore, all transmitters are galvanically isolated from each other.) This option is recommended in order to prevent earth loops.
- The power supply can also be designed with "intrinsically safe" explosion protection.

The cabinet size depends on which of of the various components are selected for a certain version. In particular, these are:
- number of transmitters to be connected, whether with or without sensor power supply,
- non-hazardous or hazardous area version,
- number of displays

Note!
For connection, see "Connection types FXA560/HART Multiplexer connection" on Page 17.

The following cabinet sizes are available:

Versions with sensor power supply				
Dimensions / material	**Approval**	**Number of channels**	**With galvanic isolation**	**Number of displays**
380 x 380 x 210 mm / steel	Non-hazardous area	3 - 16	No	Max. 2
400 x 400 x 200 / plastic	Non-hazardous area	3 - 16	No	Max. 2
380 x 600 x 210 mm / steel	Non-hazardous area	3 - 16	No	Max. 2
400 x 600 x 200 / plastic	Non-hazardous area	3 - 16	No	Max. 2
380 x 380 x 210 mm / steel	Non-hazardous area	17 - 30	No	Max. 2
400 x 400 x 200 / plastic	Non-hazardous area	17 - 30	No	Max. 2
380 x 600 x 210 mm / steel	Non-hazardous area	17 - 30	No	Max. 2
400 x 600 x 200 / plastic	Non-hazardous area	17 - 30	No	Max. 2
380 x 600 x 210 mm / steel	Non-hazardous area	3 - 16	Yes	Max. 2
400 x 600 x 200 / plastic	Non-hazardous area	3 - 16	Yes	Max. 2
600 x 600 x 210 mm / steel	Non-hazardous area	17 - 30	Yes	Max. 2
600 x 600 x 200 / plastic	Non-hazardous area	17 - 30	Yes	Max. 2
380 x 600 x 210 mm / steel	Hazardous area	3 - 10	Yes	Max. 2
400 x 600 x 200 / plastic	Hazardous area	3 - 10	Yes	Max. 2
600 x 600 x 210 mm / steel	Hazardous area	11 - 16	Yes	Max. 2
600 x 600 x 200 / plastic	Hazardous area	11 - 16	Yes	Max. 2
600 x 600 x 210 mm / steel	Hazardous area	17 - 30	Yes	Max. 2
600 x 600 x 200 / plastic	Hazardous area	17 - 30	Yes	Max. 2

Versions without sensor power supply				
Dimensions / material	**Approval**	**Number of channels**	**With galvanic isolation**	**Number of displays**
380 x 380 x 210 mm / steel	Non-hazardous area	3 - 16	Yes	Max. 2
400 x 400 x 200 / plastic	Non-hazardous area	3 - 16	Yes	Max. 2
380 x 600 x 210 mm / steel	Non-hazardous area	3 - 16	Yes	Max. 2
400 x 600 x 200 / plastic	Non-hazardous area	3 - 16	Yes	Max. 2
380 x 380 x 210 mm / steel	Non-hazardous area	17 - 30	Yes	Max. 2
400 x 400 x 200 / plastic	Non-hazardous area	17 - 30	Yes	Max. 2
380 x 600 x 210 mm / steel	Non-hazardous area	17 - 30	Yes	Max. 2
400 x 600 x 200 / plastic	Non-hazardous area	17 - 30	Yes	Max. 2

Galvanic isolation

Note!
In installations without galvanic isolation, particularly those with long lines, potential differences can arise that can cause earth loops and equalising currents. Therefore, the option with galvanic isolation is recommended.

Fieldgate Solution FXA560 - with Fieldgate FXA520 (HART Multidrop Configuration)

- Only HART communication possible.
- Up to 16 transmitters (2 x 8) can be connected, with Multidrop fixed current 4 mA.
- All connected transmitters must be assigned their own HART short address in advance.

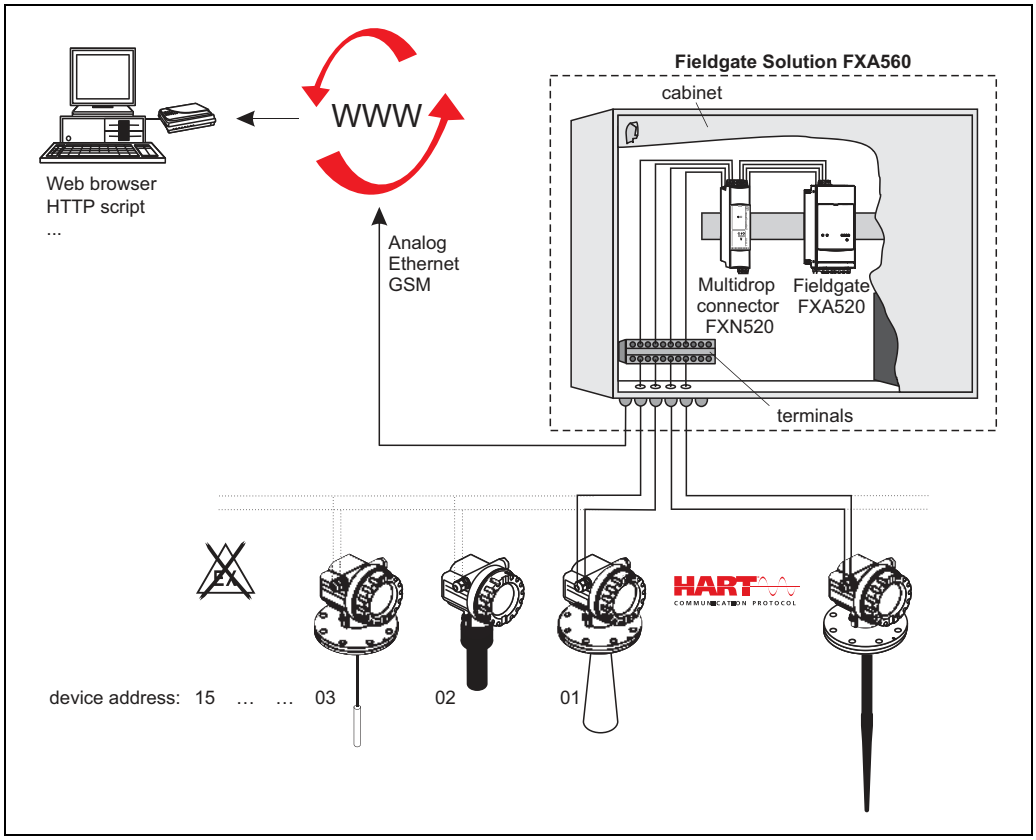

L00-FXAx60xx-14-00-06-en-003

In the standardised HART Multidrop mode, the transmitters are operated in parallel as fieldbus devices. Up to 15 transmitters can be connected to each segment. The FXA560 can support 2 segments. In Multidrop mode, the measured value is transmitted only digitally via the HART protocol, where the signal current is always fixed (typically 4 mA). Also, no display is possible in this mode.

The following cabinet sizes are available:

Dimensions / material	Approval	Number of segments	With galvanic isolation	Number of displays
300 x 300 x 210 mm / steel	Non-hazardous area	2	No	Without

Note!
For connection, see "Connection types FXA360/HART Multidrop connection" on Page 21.

All E+H measuring devices with the HART protocol can be used to the full extent with Fieldgate

A current list of all E+H measuring devices that have the HART protocol can be found under:

- www.hartcomm.org: "HART Products/Product Catalogue/ ...".

All Endress+Hauser measuring devices with HART protocol can be connected to the Fieldgate.
Even 4...20 mA devices without HART protocol can be operated in conjunction with the Fieldgate, e.g. limit switch (Liquiphant, ...). However, then only the measured value can be read. The remote maintenance function is not given for 4...20 mA devices because the HART protocol is required for this function.

Input

Analogue 4...20 mA inputs (FXA360 only)

FXA320

2 channels with galvanic isolation. Can be used independently as active or passive input.

Channel 1&2 - active	
Output voltage	15 V ±5% / (22 mA)
No-load voltage	23.5 V ±5%
Output current	max. 23 mA
Short-circuit current	max. 64 mA
short-circuit duration	Unlimited
Connection cable	Instrument cable, unscreened
Cable resistance	max. 25 Ω per core

Channel 1&2 - passive	
Max. input voltage per channel	35 V
Max. input current per channel	45 mA
Input impedance	254 Ω
Accuracy	≤ 0.5 %
Voltage drop (incl. diode against reverse polarity)	≤ 6.4 V
Connection cable	Instrument cable, unscreened
Cable resistance	max. 25 Ω per core

HART channel 1&2 (FXA560 only)

FXA520

The HART signal is capacitive coupled and decoupled via a communication resistor

Communication resistor in the 4...20 mA signal line	Integrated 270 Ω communication resistor, for optional use, max. 45 mA!
Short-circuit duration (without interrior communication resistor)	Unlimited

Passive connection

- Galvanic isolation between HART channel 1 and channel 2
- Ex isolation between transmitters and internal circuits.

Output voltage U0 in the event of a fault (Ex)	Max. 6.5 V
Max. current for EEx ia (Ex)	5.97 mA
Max. output power (Ex)	39 mW
Maximum input voltage (Ex)	30 V
Maximum input voltage (non-Ex)	45 V

Active connection in non-hazardous area, galvanic isolation

- Galvanic isolation between HART channel 1 and channel 2
- For connection data, see:
  – TI081R/09/de for transmitter power supply RNS221

Active connection in hazardousarea, galvanic isolation

- Galvanic isolation between HART channel 1 and channel 2
- For connection data, see:
  – TI073R/09/de for active barrier RN221N

Active connection >3 channels in non-hazardous area, galvanic isolation

- Galvanic isolation between HART channel 1-30
- For connection data, see:
  – TI081R/09/de for transmitter power supply RNS221
  – BA265F/00/de for HART Multiplexer Master KFD2-HMM-16
  – BA283F/00/de for HART Multiplexer Slave KFD0-HMS-16
  – BA266F/00/en and BA267F/00/de for Multiplexer Interface Module
  – TI063R/09/de for process display RIA251

Active connection >3 channels in hazardous area, galvanic isolation

- Galvanic isolation between HART channel 1-30
- For connection data, see:
  – TI073R/09/de for active barrier RN221N

Connection >3 channels without galvanic isolation

- Common power supply of HART channels 1-30
- For connection data, see:
  – 24 V with 250 Ω communication resistor in the interface module
  – BA265F/00/de for HART Multiplexer Master KFD2-HMM-16
  – BA283F/00/de for HART Multiplexer Slave KFD0-HMS-16
  – BA266F/00/en and BA267F/00/de for Multiplexer Interface Module
  – TI063R/09/de for process display RIA251

Binary inputs

FXA320

Galvanic isolation of all channels from the rest of the current circuits. Each 2 channels have the same reference potential.

Number of digital inputs	4
Input signal voltage	L-signal: -3 ... +5 V H-signal: +15 ... +30 V
Input current with H-signal	5 mA
Max. quiescent current with L-signal	1 mA
Measuring range of event counter function	0 ...12.5 kHz
Measuring range of frequency measurement	4.7 Hz (±1%) ... 12.5 kHz (±4%)

RN221N
Active barrier

For information, see Technical Information TI073R/09/de.

RNS221
Transmitter power supply

For information, see Technical Information TI081R/09/de.

Multiplexer interface module

For information, see Operating Instructions BA266F/00/en and BA267F/00/de.

Power supply

Supply voltage

Alternating current version (AC):

Voltage range: 90...253 V, 50/60 Hz.
Safe galvanic isolation between mains supply and internal circuits.

Direct current version (DC):

Voltage range: 20...30 V_{DC}.

Cable entry

- Cable entry for connecting the transmitters: M20x1.5
- In Multidrop configuration: either M20x1.5 or as 7/8" plug (Fieldbus Foundation standard)
- In each unit, 2 M20x1.5 cable glands are screwed in for the power supply.

The number of cable glands for the transmitters can be defined in the order information (see Page 30 and 32).

Connection types FXA360

2-channel connection, active/passive

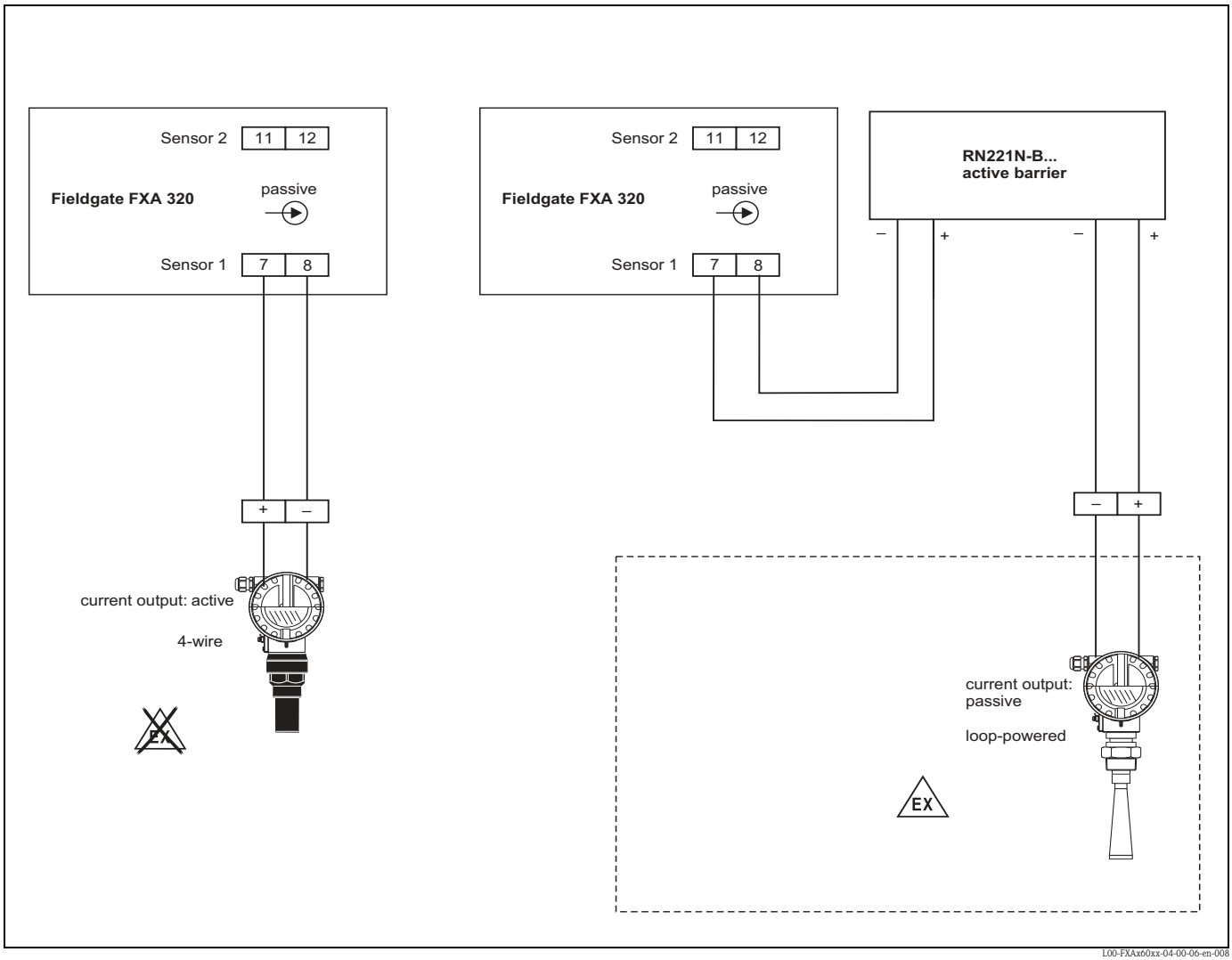

Connection of binary inputs

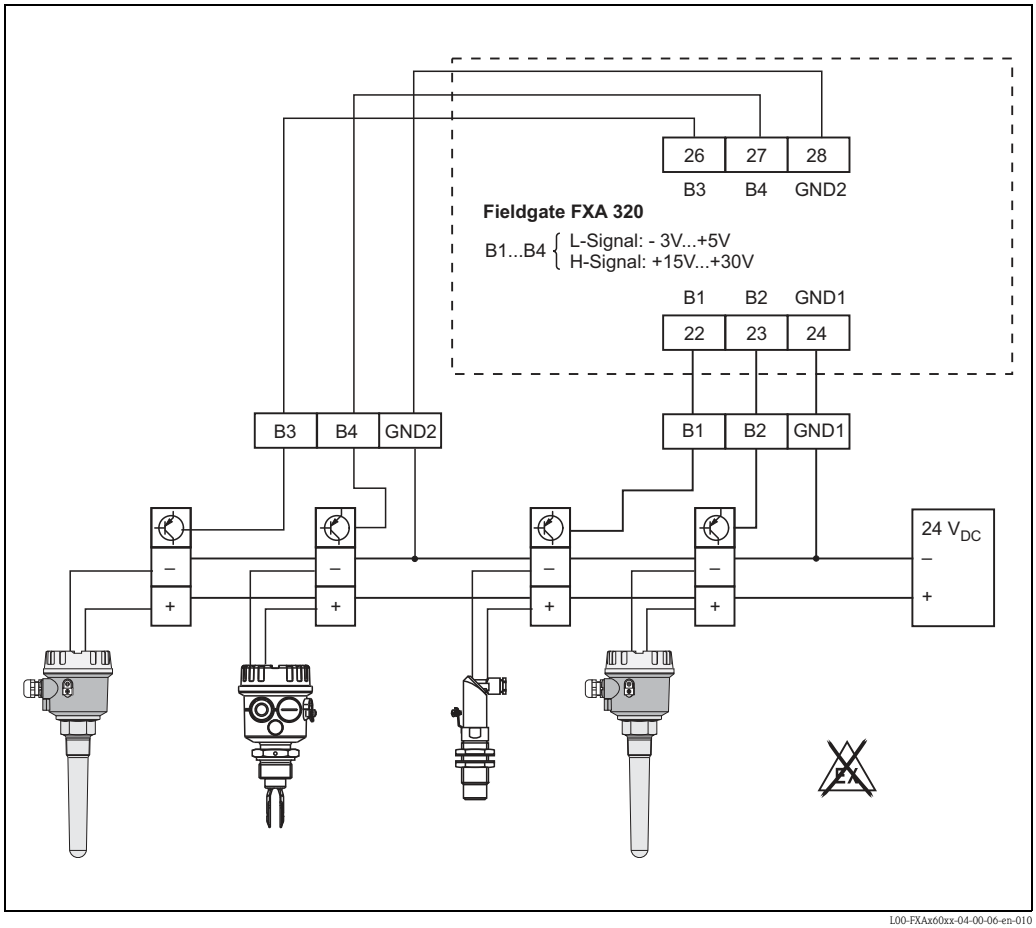

Connection types FXA560 **2-channel connection, active**

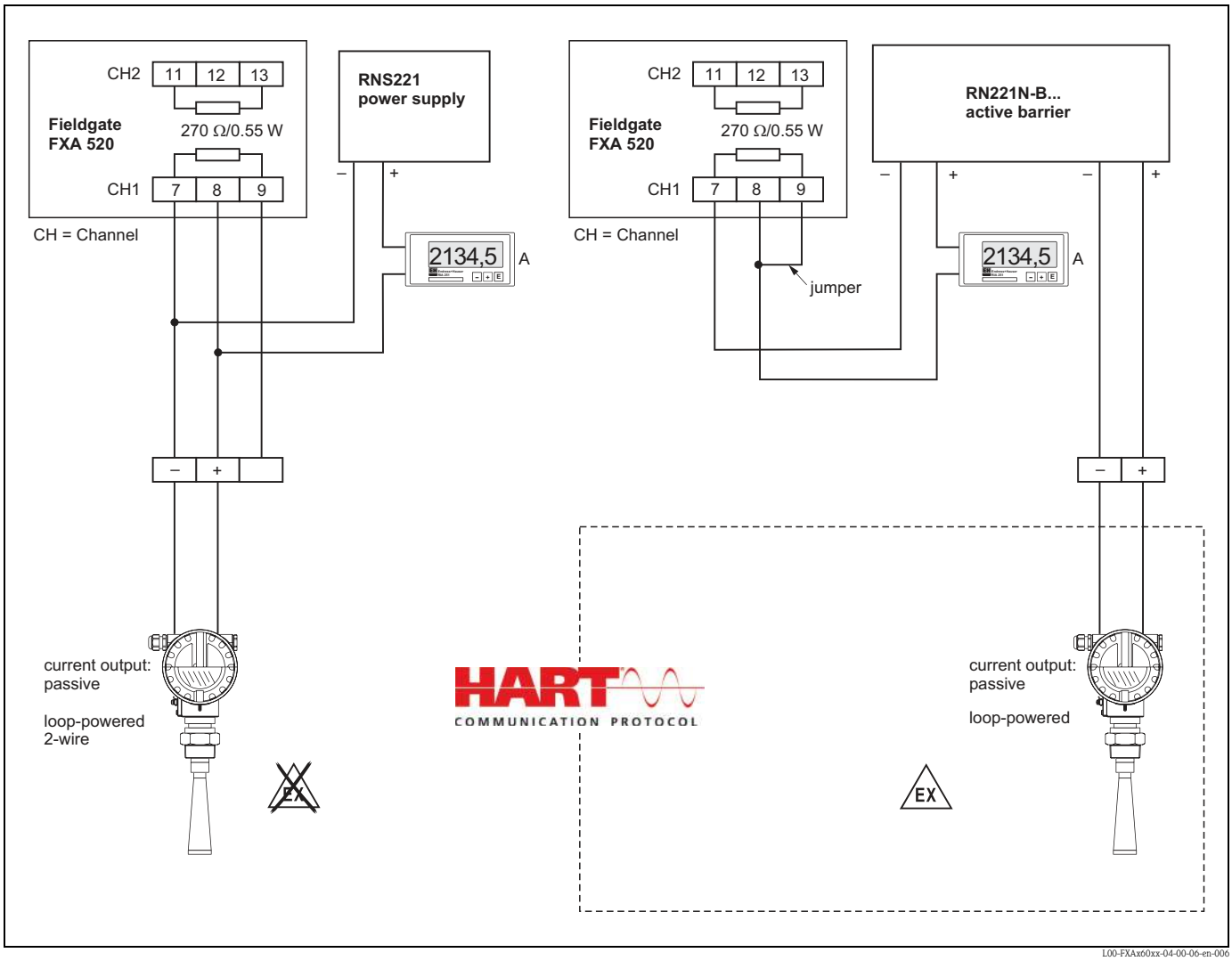

2-channel connection, passive

- Example ① of a four-wire passive connection with display
- Example ② of a passive connection and transmitter power supply with communication resistor without display
- Example ③ of a passive connection and transmitter power supply with communication resistor with display

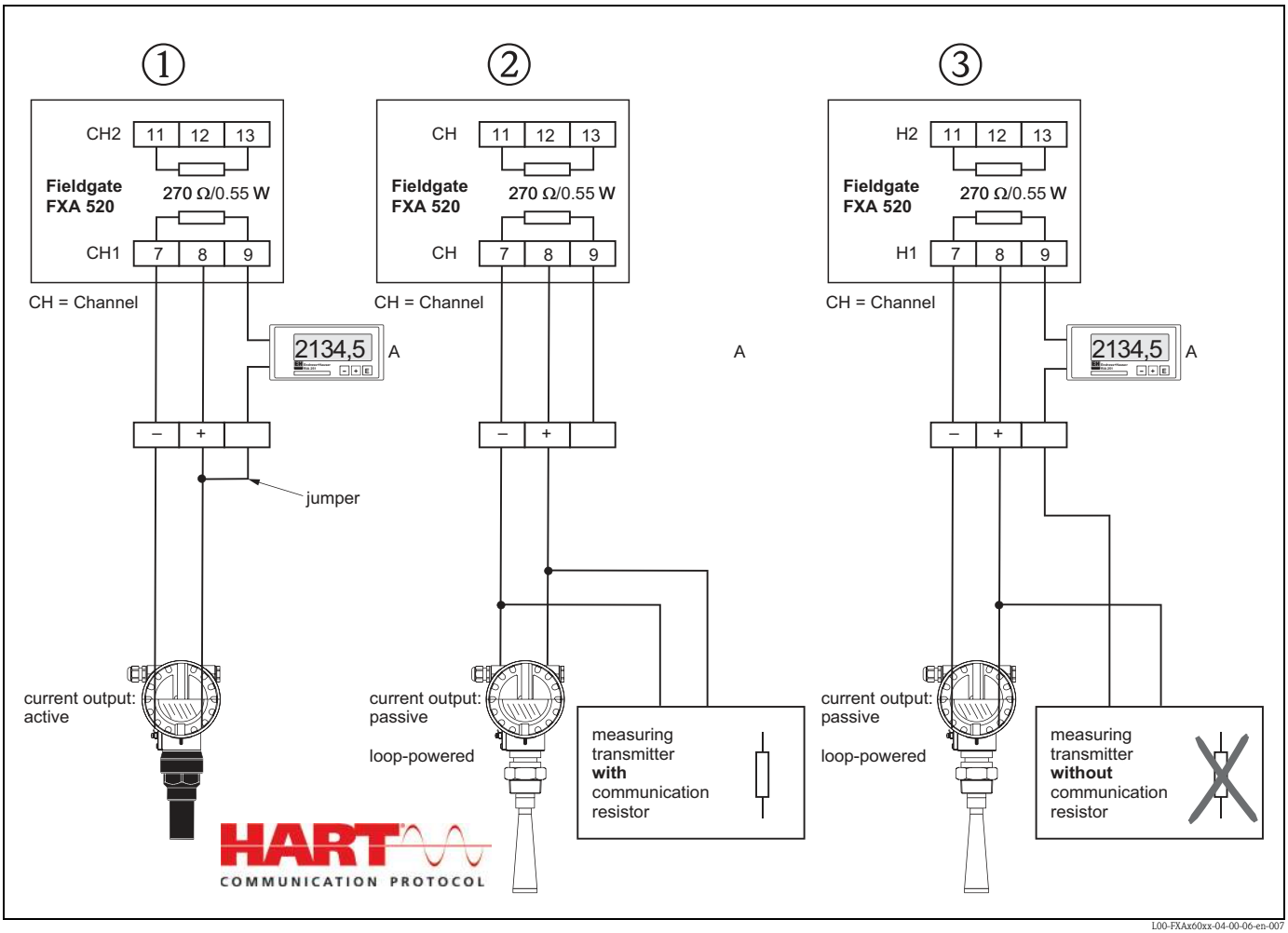

Note!
If a display is desired, the internal communication resistor of the FXA560 is always used (see example ③). Note the voltage drop of the communication resistor and display!

HART Multiplexer connection

Example of a passive connection to an existing installation without existing communication resistor with display:

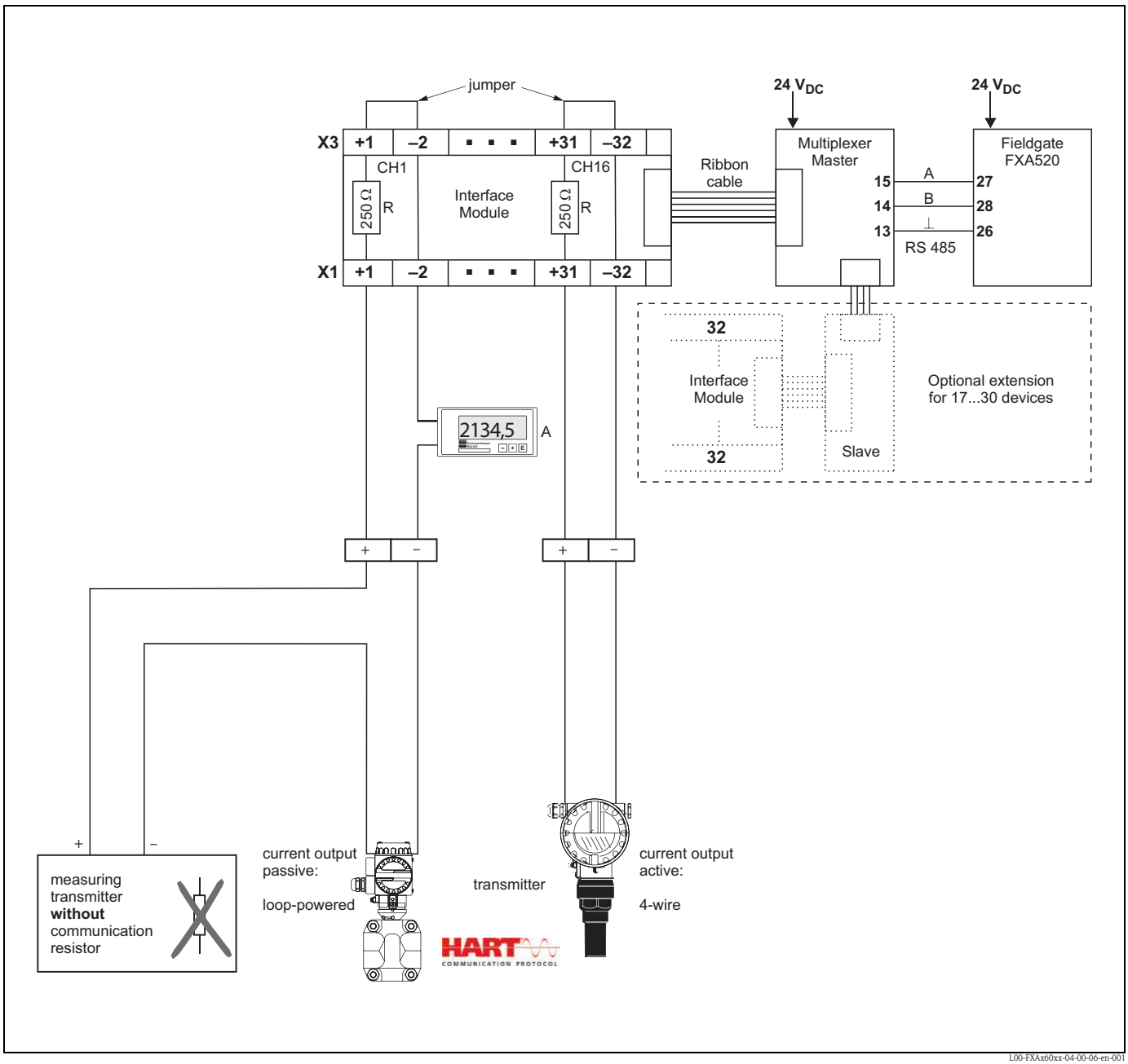

L00-FXAx60xx-04-00-06-en-001

Example of a passive connection to an existing installation with existing communication resistor without display:

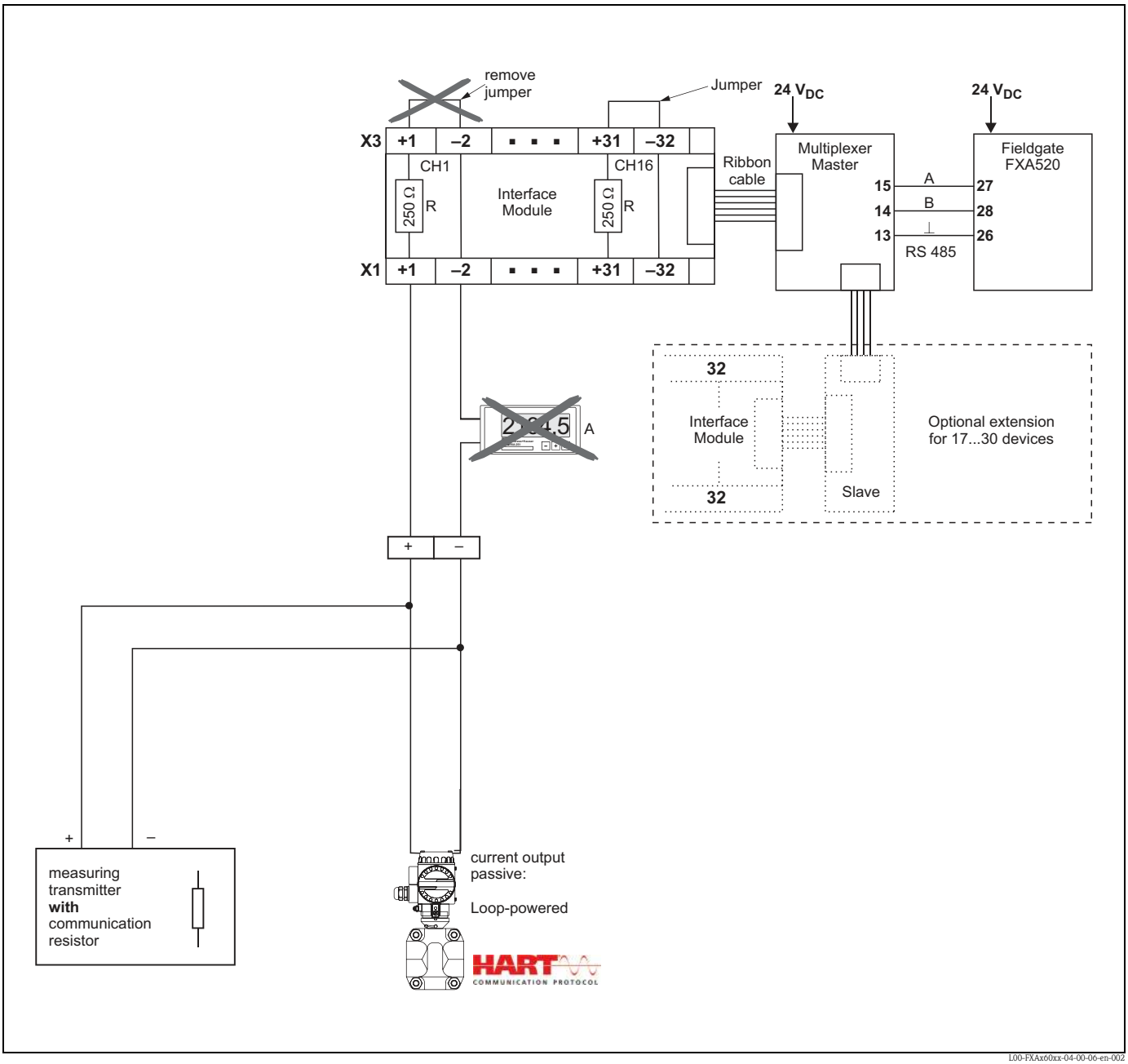

Note!
If a display is desired, the internal communication resistor of the FXA560 is always used (17). Note the voltage drop of the communication resistor and display!

Example of an active connection, with galvanic isolation in non-hazardous area:

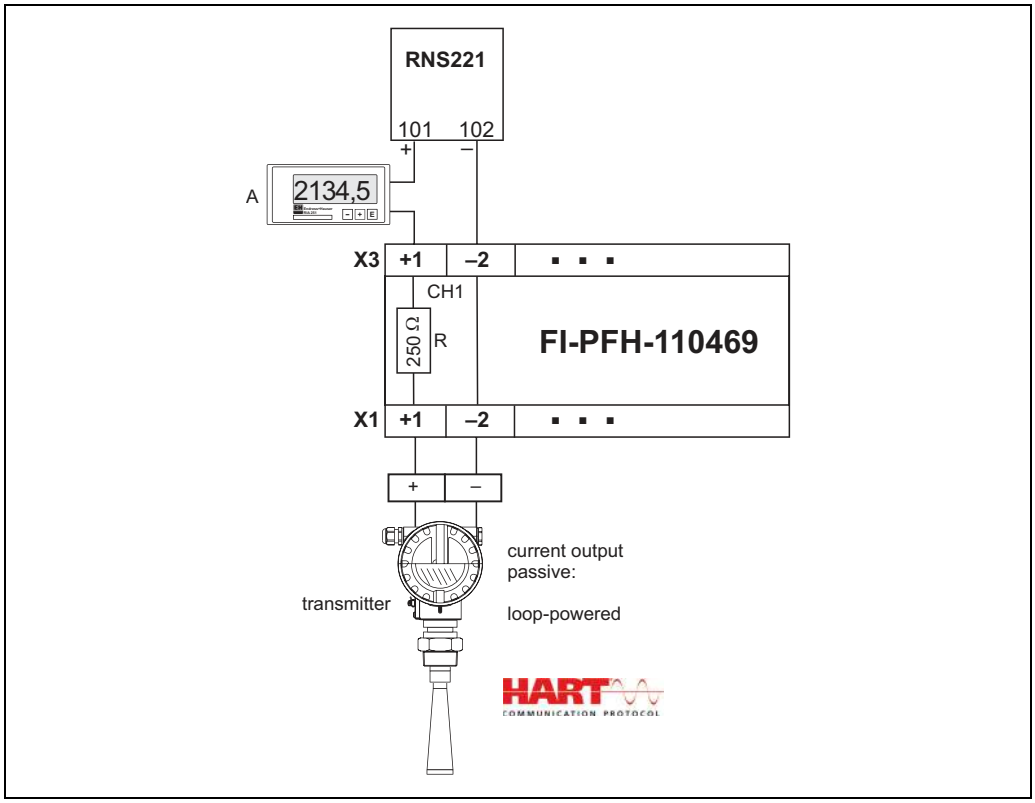

L00-FXAx60xx-04-00-06-en-003

Example of an active connection, with galvanic isolation in hazardous area:

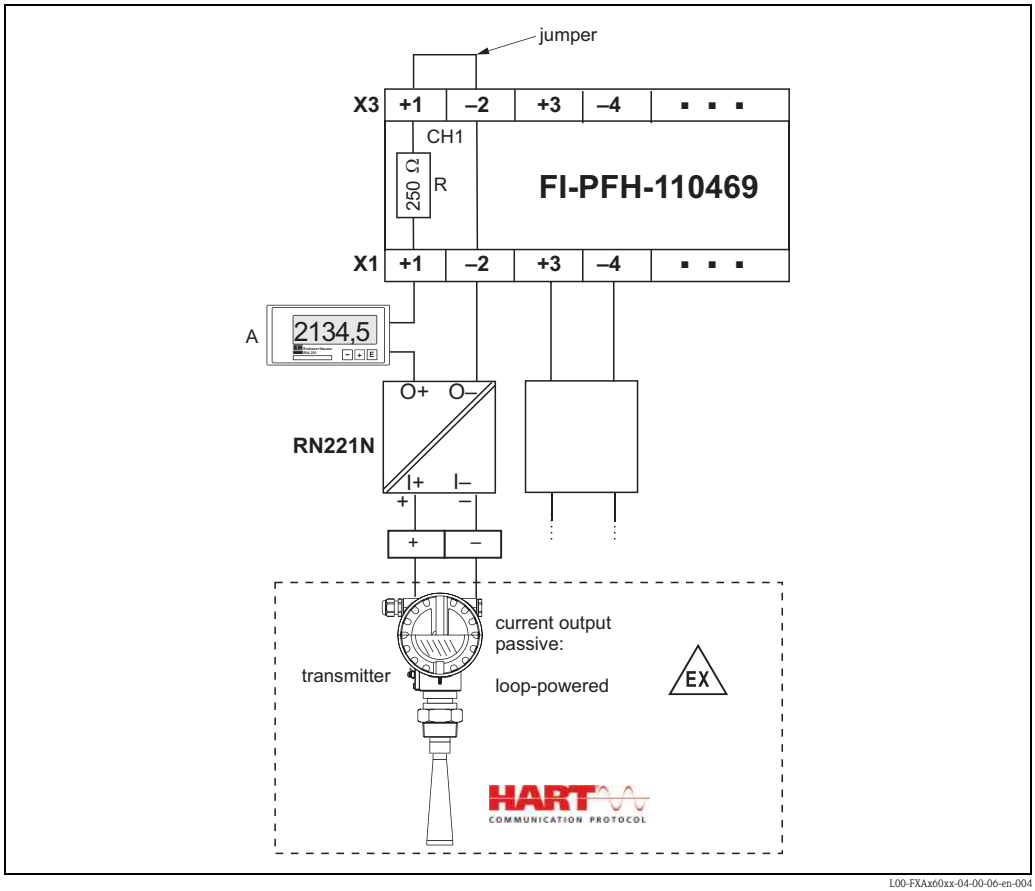

L00-FXAx60xx-04-00-06-en-004

Example of an active connection, without galvanic isolation:

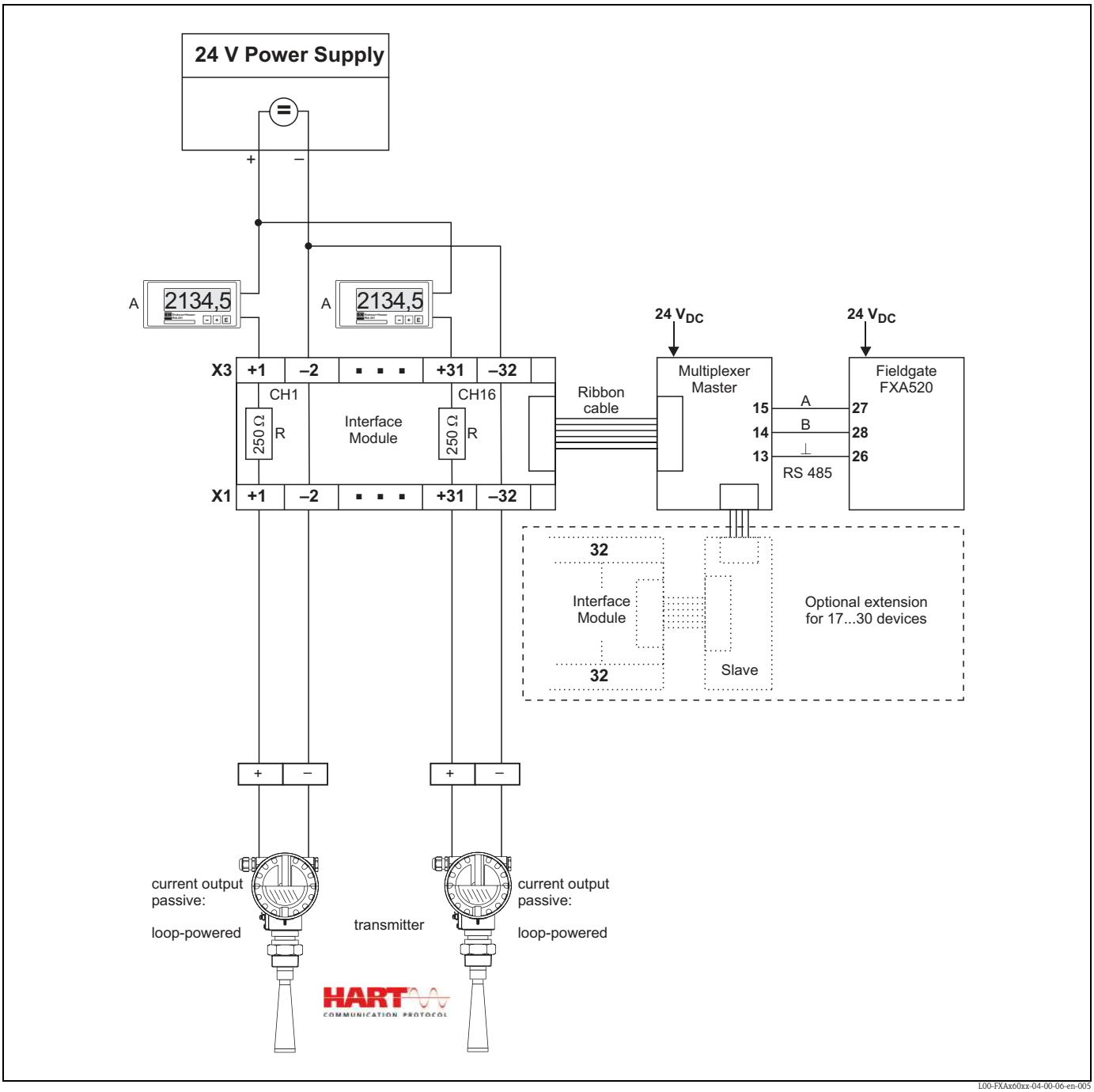

HART Multidrop connection

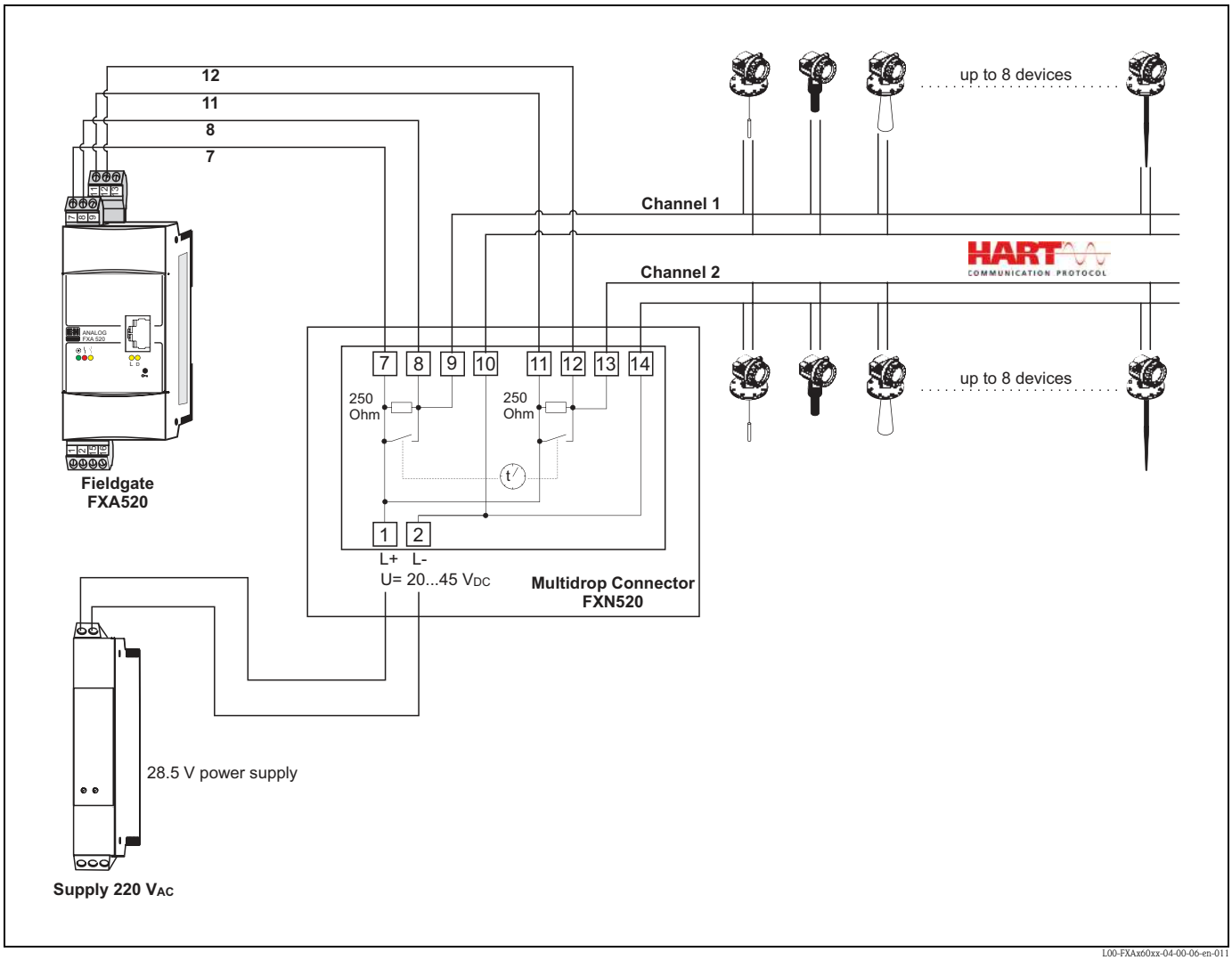

L00-FXAx60xx-04-00-06-en-011

Note!
Output voltage at Multidrop segment U_{max} = 29 V.
Ensure that the connected transmitters are also designed for this output voltage.

Operating conditions: Environment

Permitted ambient temperatures	-25 °C... +40 °C
Storage temperature	-25 °C... +85 °C (preferably at +20 °C)
Ingress protection	IP 65, as per EN 60529

Mechanical construction

Design, dimensions

Note!
100 mm = 3.94 in

Dimensions

Schaltschrank – Anzahl der Varianten siehe Tabelle unten

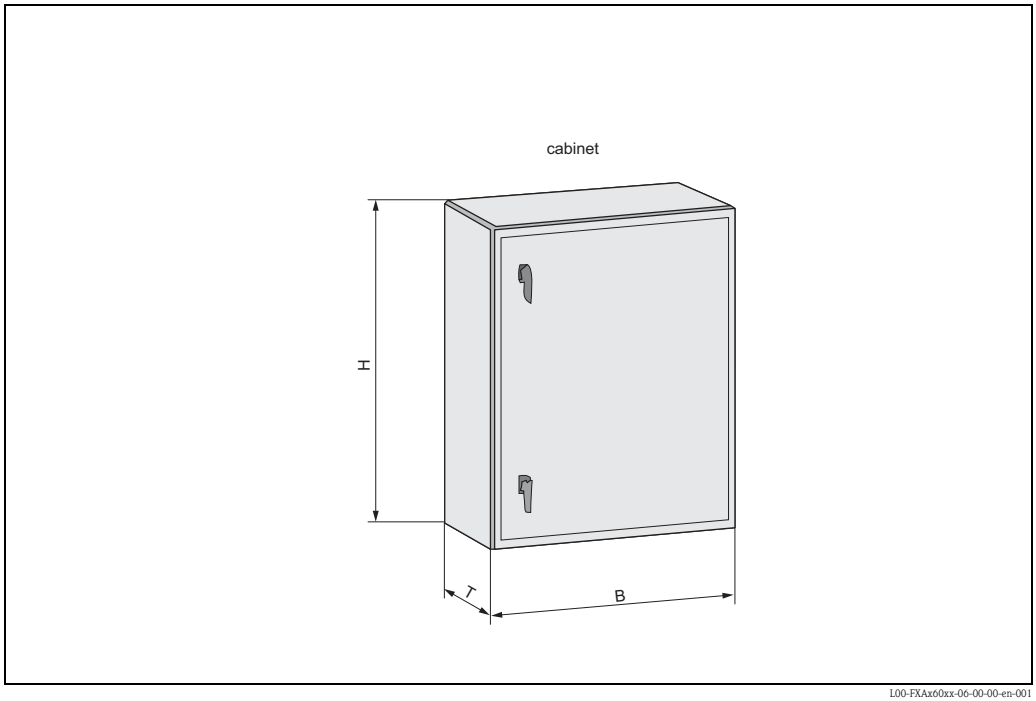

L00-FXAx60xx-06-00-00-en-001

Version	W x H x D [mm]	Material	Cabinet weight [kg]
FXA360-########**A**##	300 x 300 x 210	Steel [1]	Approx. 7
FXA560-########**A**##	300 x 300 x 210	Steel [1]	Approx. 7
FXA560-########**B**##	380 x 380 x 210	Steel [1]	Approx. 9.2
FXA560-########**C**##	380 x 600 x 210	Steel [1]	Approx. 15
FXA560-########**D**##	600 x 600 x 210	Steel [1]	Approx. 21.5
FXA360-########**B**##	300 x 400 x 200	Plastic [2]	Approx. 5.3
FXA560-########**E**#	300 x 400 x 200	Plastic [2]	Approx. 5.3
FXA560-########**F**#	400 x 400 x 200	Plastic [2]	Approx. 7.2
FXA560-########**G**#	400 x 600 x 200	Plastic [2]	Approx. 10
FXA560-########**H**#	600 x 600 x 200	Plastic [2]	Approx. 14

1) Sheet steel, colour: light grey, RAL 7032

2) Polyester, fibreglass-reinforced, unsaturated

Terminals in the cabinet

Connection cross-section

maximum 1 x 2.5 mm or 2 x 1.5 mm

An example of the arrangement of the components in a Fieldgate Solution FXA560

The arrangement of the individual components depends on the order.

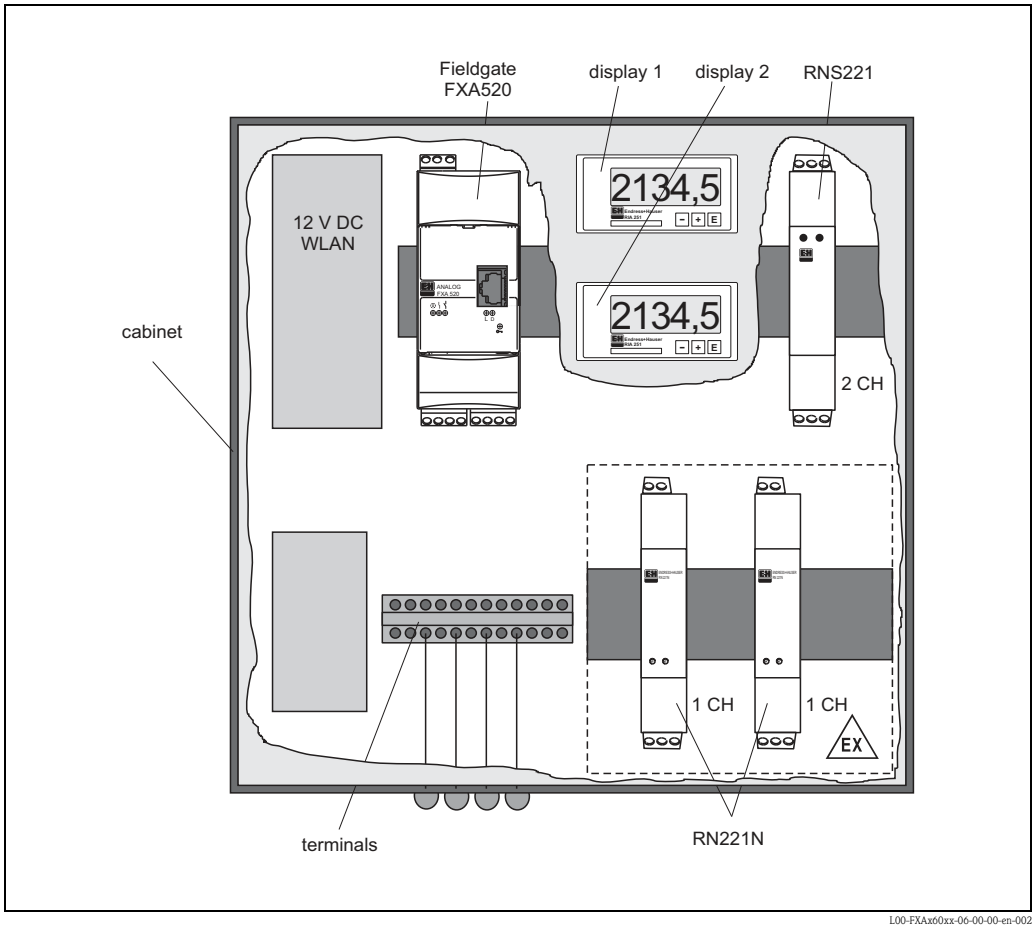

L00-FXAx60xx-06-00-00-en-002

Wiring diagram

Note!
A wiring diagram with the corresponding terminal assignment is located in the cabinet.

Plug-in connections

Connection socket for Ethernet Fieldgate versions:

RJ45 socket

Connection socket for GSM antenna:

FME socket (male)

Connection plug for DAT module:

8-pin plug connector in 2.54 mm raster, 2 rows

Connection plug for PC cable:

3-pin plug connector in 2.54 mm raster, 1 row

Human interface

Display elements at Fieldgate FXA360/560

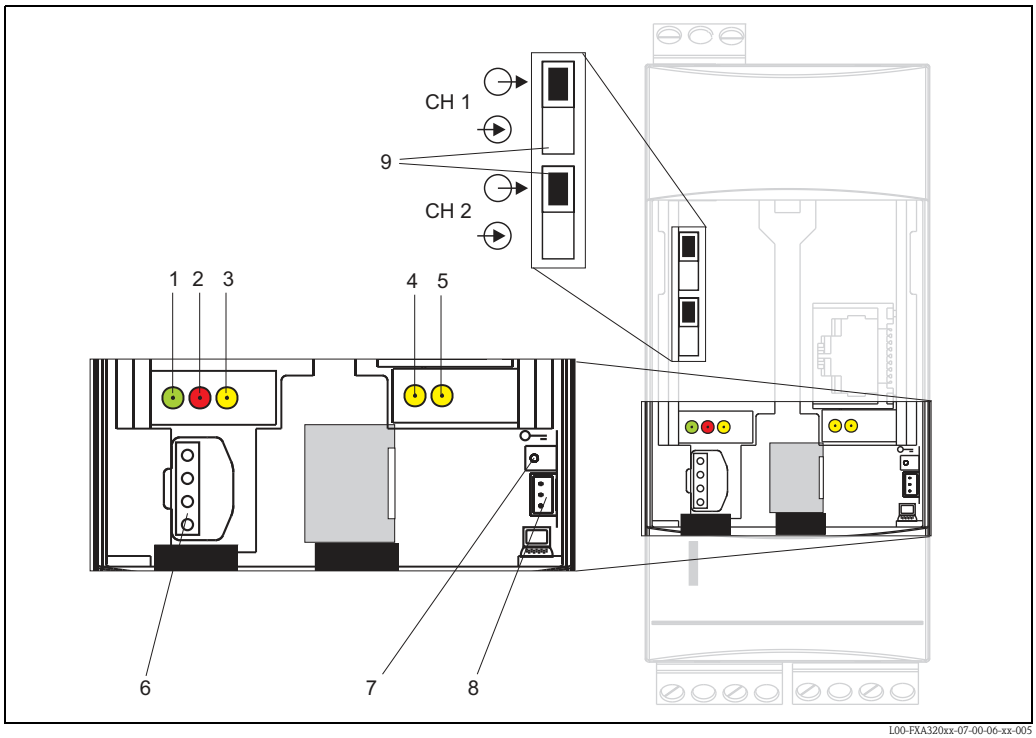

Position	Light emitting diode (LED)	Meaning
1	Green LED constant	Displays the correct power supply
2	Red LED constant	Displays a fault
	Red LED flashes	Displays a warning / On site communication via PC / Hardware is unlocked / system start
3	Yellow LED	Switching status of the built-in relay / LED on = relay tightens – LED off = relay de-energised – LED on = relay energised
4	Yellow LED	Displays a successful connection
5	Yellow LED	Displays a transfer activity / GSM version: field strength display if no connection

Operating elements at Fieldgate FXA360/560

For the arrangement of the elements, see the diagram above.

Position	Element	Meaning
6	Socket	Connection socket for DAT module
7	Button	Button for hardware security locking and configuration reset
8	Socket	Connection socket for PC cable (service connector)

FXA360 only

Position	Element		Current input channel 1 (CH1)		Current input channel 2 (CH2)	
9	Switch position (up)			aktive		aktive
	Switch position (down)			passive		passive

Operation concept

Fieldgate offers world-wide remote monitoring, remote diagnosis and remote configuration of Smart transmitters with the international used HART® protocol. Measured values become available world-wide via Internet and can be efficiently processed. A standard web browser is used for visualising and remote inquiry. Fieldgate displays parameters and measured values of field instruments on an HTML page. Max. 30 measured values can be displayed. Up to 4 measured values can be displayed per device.

Fieldgate FXA560

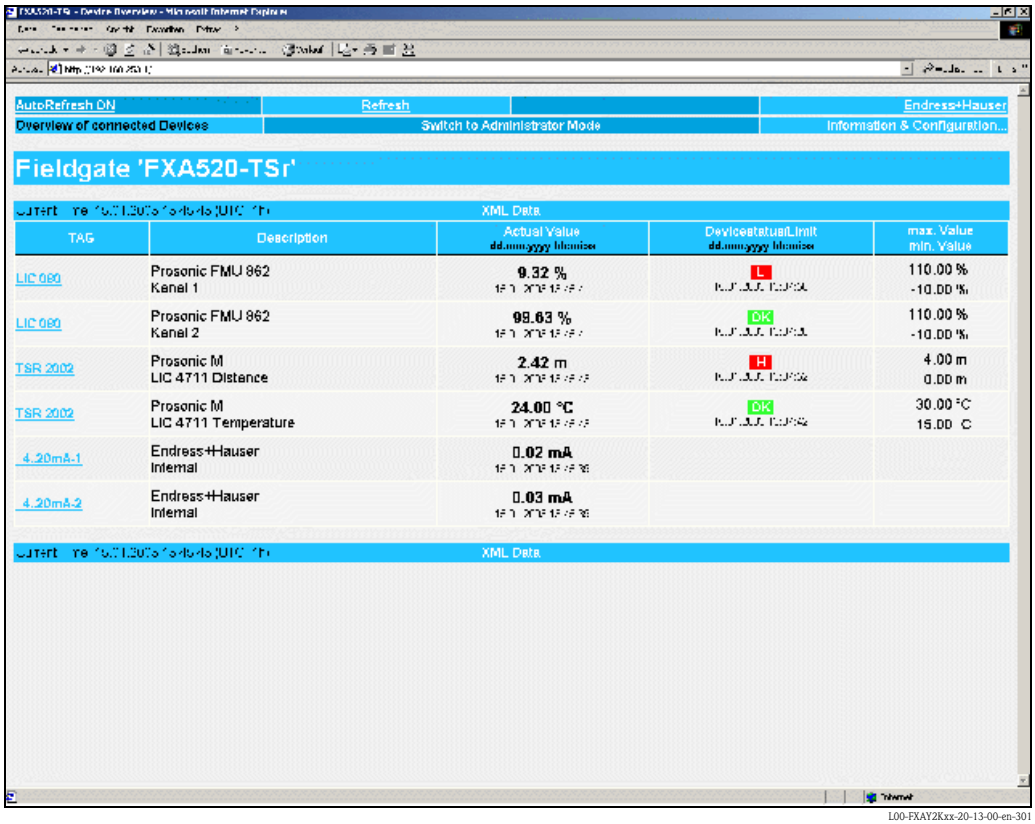

L00-FXAY2Kxx-20-13-00-en-301

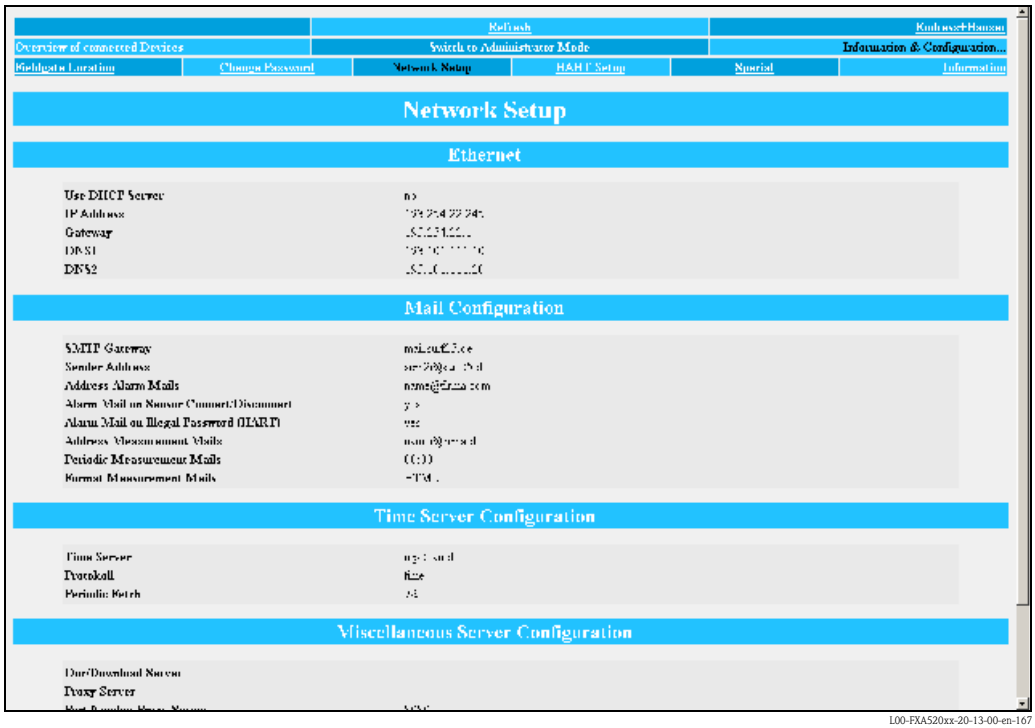

L00-FXA520xx-20-13-00-en-167

Fieldgate FXA360

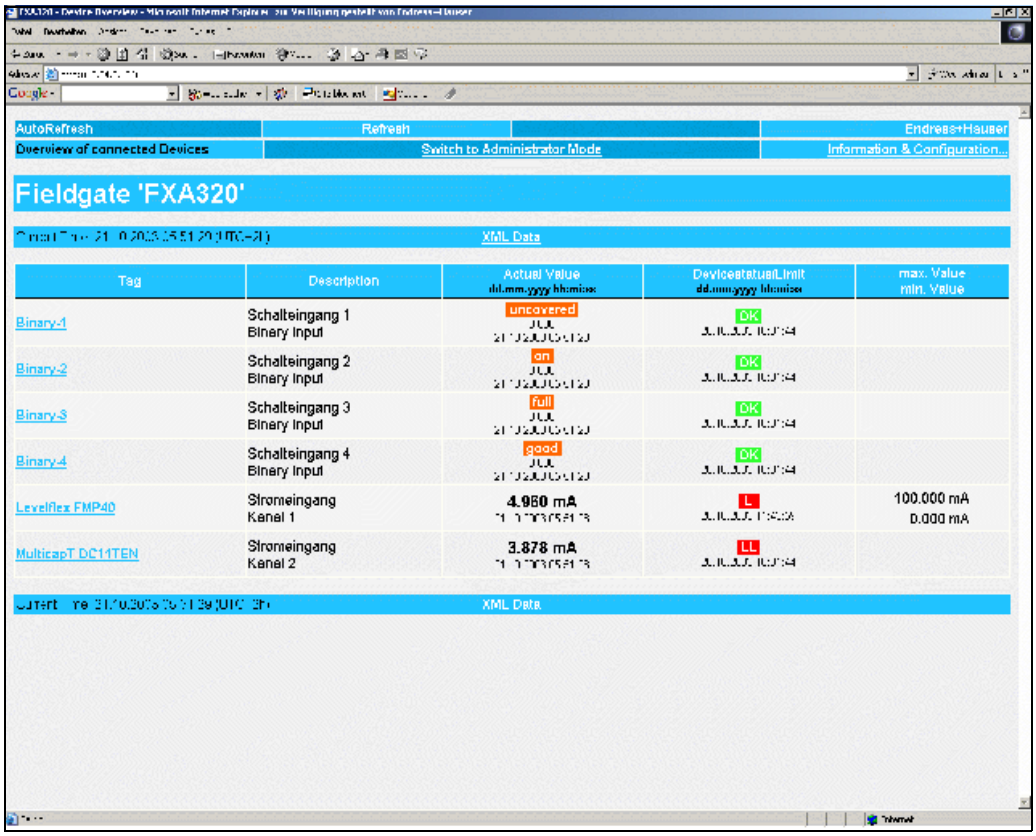

L00-FXA320xx-20-13-00-en-001

Certificates and approvals

CE mark

The FXA360/560 meets the legal requirements of the EC directives.
Endress+Hauser confirms that the device has been successfully tested by applying the CE label.

Ex-approval

See Ordering information on Page 29 and 31

Explosion protection

FXA560 - active connection

See documentation for active barrier RN221N.

FXA360 - active connection

See documentation for active barrier RN221N.

FXA560 2-channel HART, passive

See documentation for Fieldgate FXA520.

Other standards and guidelines

Other standards and guidelines that have been observed when designing and developing the Fieldgate.

EN 60529

Ingress protections for housing (IP code)

EN 61010

Safety requirements for electrical equipment for measurement, control and laboratory use

Telecommunications Regulatory Compliance

Fieldgate analogue version

North America

FCC CFR 47, part 15 and part 68

Europe

Telecoms Terminal Equipment Directive (98/13/EG)
European approval TBR 21

Fieldgate GSM version

North America
FCC CFR 47 Part 15 and Part 24

Federal Communications Commission Notice

This device generates, uses, and can radiate radio frequency energy and, if not installed and used in accordance with the instructions, may cause harmful interference to radio communications. However, there is no guarantee that interference will not occur in a particular installation. If this equipment does cause harmful interference to radio or television reception, which can be determined by turning the device off and on, the user is encouraged to try to correct the interference by one or more of the following measures:
– Reorient or relocate the receiving antenna.
– Increase the separation between the equipment and receiver.
– Connect the equipment into an outlet on a circuit different from that to which the receiver is connected.

To ensure that the unit complies with current FCC regulations and safety requirements limiting both maximum RF output power and human exposure to radio frequency radiation, use an antennna with a maximum gain of 2dBi and a separation distance of at least 20 cm must be maintained between the unit's antenna and the body of the user and any nearby persons at all times and in all applications and uses.

Modifications

The FCC requires the user to be notified that any changes or modifications made to this device that are not expressly approved by Endress+Hauser may void the user's authority to operate the equipment.

Federal Communications Commission Statement

FCC-ID: LCG-FG-FXA52X-32X
This device complies with Part 15 of the FCC rules. Operation is subject to the following two conditions:
(1) This device may not cause harmful interference, and
(2) This device must accept any interference received, including interference that may cause undesired operation.

Wireless Notices

In some situations or environments, the use of wireless devices may be restricted. Such restrictions may apply aboard airplanes, in vehicles, in hospitals, near explosives, in hazardous locations, etc. If you are uncertain of the policy that applies to the use of this device, please ask for authorization to use it prior to turning it on.

Ordering information

Fieldgate Solution FXA360

10	**Approval:**											
	A	Non-hazardous area										
	B	ATEX II (1) GD [EEx ia] IIC										
	C	FM IS CL.I,II,III Div.1 Gr.A-G										
	D	CSA IS CL.I,II,III Div.1 Gr.A-G										
	F	CSA General purpose, CSA C US										
20		**Power Supply:**										
	A	85-253VAC 50/60Hz										
	E	20-30VDC										
30			**Modem Interface:**									
		1	Ethernet									
		2	Analog									
		6	GSM Quadband antenna									
40				**Data Management:**								
			A	not selected								
			B	DAT module								
50					**Input:**							
				A	2-channel analogue 4-20mA							
				B	2-channel analogue 4-20mA+4x digital							
60						**Sensor Power:**						
					1	2-channel active						
					2	2-channel passive						
					3	1-channel active+ 1-channel passive						
70							**Panel Mounting:**					
						A	w/o display					
						B	1x display					
						C	2x display					
80								**Additional Option:**				
							1	not selected				
90									**Electric Cabinet:**			
								A	Steel 300x300x210mm			
								B	Plastics 300x400x200mm			
100										**Cable Entry:**		
									1	not selected		
									2	4x gland M20		
									3	8x gland M20		
110											**Circuit Breaker:**	
										1	not selected	
										2	selected	
FXA360-												Complete product designation

Fieldgate Solution FXA560

10	**Approval:**											
	A	Non-hazardous area										
	G	ATEX II (1)GD [EEx ia] IIC										
	P	FM IS CL.I,II,III Div.1 Gr.A-G										
	S	CSA IS CL.I,II,III Div.1 Gr.A-G										
20		**Power Supply:**										
	A	85-253VAC										
	E	20-30VDC										
30			**Modem Interface:**									
		1	Ethernet									
		2	Analogue									
		6	GSM Quadband antenna									
40				**Data Management:**								
			A	not selected								
			B	DAT module								
50					**Connection HART:**							
				1	2-channel aktive/passive							
				2	Multidrop, max. 2x 8 channels active							
				3	Multiplexer 3-16 channel active							
				4	Multiplexer 17-30 channel active							
				5	Multiplexer 3-16 channel active/passive							
				6	Multiplexer 17-30 channel active/passive							
60						**Sensor Power:**						
					A	not selected						
					B	Multidrop, 2 segments						
					C	x galvanically isolated 1-2						
					D	x galvanically isolated 3-16						
					E	x galvanically isolated 17-30						
					F	x galvanically isolated, Ex 1-2						
					G	x galvanically isolated, Ex 3-10						
					H	x galvanically isolated, Ex 11-16						
					K	x galvanically isolated, Ex 17-30						
					L	x not galvanically isolated 3-16						
					M	x not galvanically isolated 17-30						
70							**Panel Mounting:**					
							1	w/o display				
							2	1x display 1-channel				
							3	2x display 2-channel				

FXA560-												Product designation (part 1)

Fieldgate Solution FXA560 (continued)

80	**Additional Option:**	
	1	not selected
90	**Electric Cabinet:**	
	A	Steel 300x300x210mm
	B	Steel 380x380x210mm
	C	Steel 380x600x210mm
	D	Steel 600x600x210mm
	E	Plastic 300x400x200mm
	F	Plastic 400x400x200mm
	G	Plastic 400x600x200mm
	H	Plastic 600x600x200mm
100	**Cable Entry:**	
	A	not selected
	B	7/8" plug
	C	x gland M20
		Note! Two M20 gland cable entries for power + communication connections are always mounted. Chose additional number of cable entries for transmitter.
110	**Circuit Breaker:**	
	1	not selected
	2	selected
FXA560-		Complete product designation

Note!
A PC cable is included in the scope of supply with FXA360/560.

Accessories

Note!
The following table gives an overview of possible application for the individual accessory parts with the Fieldgate Solution FXA360 or FXA560.

Accessory	Fieldgate Solution FXA360	Fieldgate Solution FXA560
DAT module	X	X
PC cable	X	X
Telephone cable (analogue version only)	is required	is required
Fieldgate OPC server	X	X
Java applets	X	X
Antenna (GSM version only)	is required	is required
HART Client (FXA560 only)	—	X
Multiplexer (FXA560 only)	—	X
E+H power supply units (FXA560 only)	—	X
24 V switched-mode power supply (Phoenix)		
Process display RIA251		
Process display OC7421		
Fieldgate FX320	X	—
Fieldgate FX520	—	X

DAT module

An external EEPROM, in which the configuration data is saved identically to the internal EEPROM, can be attached optionally via plug. For example, this allows for the FXA360/560 to be changed in the event of a defect, without losing the customer-specific configuration data.
Order number: 52013311.

PC cable

A PC can be connected to the FXA360/560 for configuration purposes via a serial RS 232 connection. Order number: 52013984.

Telephone cable

RJ11 (analogue plug, double-sided, length: 5 m).
Order number: 52014031.

Fieldgate OPC server

The Fieldgate OPC server provides an interface between one or more Endress+Hauser Fieldgate devices and all possible OPC Data Access 2.0 compatible Clients. The Fieldgate can be connected via a dial-up modem or through a TCP/IP network.

Java applets

Java applets for a customised view of the screen.

Antenna

Quadband antenna for communication via mobile communications (GSM):

HART Client (FXA560 only)

The HART Client is a free add-on which is required for remote configuration via HARTtools (e.g. with ToF Tool – FieldTool Package, ReadWin, ...). You can download the current software version from the Internet from the Endress+Hauser product pages (download: http://www.endress.com).

Multiplexer (FXA560 only)	Accessories for HART Multiplexer system (from Pepperl+Fuchs): ■ HART Multiplexer Master KFD2-HMM-16. Order number: 52017691. ■ Master-interface connecting cable. Order number: 52017687. ■ HART Multiplexer slave KFD0-HMS-16. Order number: 52020232. ■ Master-slave connecting cable. Order number: 52020233. ■ Interface module without communication resistor. Order number: 52017689. ■ Interface module with communication resistor. Order number: 52017690.
E+H power supply units (FXA560 only)	**RMA422** Multifunctional 1-2-channel top-hat rail device with intrinsically safe current inputs and transmitter power supply, limit value monitoring, mathematics functions and 1-2 analogue outputs. **RNS221** Power supply unit for supplying power to two two-wire sensors or transmitters in non-hazardous areas. **RN221N** Isolator with power supply for safely isolating 4...20 mA standard signal circuits. **RMA421** Multifunctional 1-channel top-hat rail device with universal input, transmitter power supply, limit value monitoring and analogue output.
E+H Multidrop Connector FXN520 (FXA560 only)	Operation of several devices in Multidrop operation for FXA520. Order number: 52023652.
24 V switched-mode power supply (Phoenix)	For supplying the Multidrop lines with up to 28.5 volts. Power supply to the 8-channel display and multiplexer. Order number: 52027739.
Process display RIA251	1-channel display. Not for Multidrop mode.
Process display OC7421	8-channel display. Not for Multidrop mode. Order number: 52027746
Fieldgate FXA320	Gateway for Remote Monitoring of Sensors and Actuators via Web Browsers.
Fieldgate FXA520	Gateway for Remote Monitoring of Sensors and Actuators via Web Browsers.

Documentation

Operating Instructions

KA193F/00/a6

Mounting and installation instructions for Fieldgate FXA520. Order number: 52013633.

KA215F/00/a6

Mounting and installation instructions for Fieldgate FXA320. Order number: 52020867.

BA00051S/04/en

Operating Instructions for Fieldgate FXA520 (online help in the Internet browser).

BA00053S/04/en

Operating Instructions for Fieldgate FXA320 (online help in the Internet browser).

BA00049S/00/en

Operating instructions for Fieldgate Data Access software (download via the Internet).

BA272F/00/en

Operating instructions for Fieldgate OPC server software (download via the Internet).

Certificates

XA188F-A/00/a3

Safety Instructions for electrical operating equipment for hazardous areas.
Order number: 52013636.

ZD086F/00/en

Control Drawings (FM). Order number: 52013634.

ZD087F/00/en

Control Drawings (CSA). Order number: 52013635.

Accessories

BA265F/00/de

Cable for the HART Multiplexer-System. Order number: 52017693.

BA266F/00/en

Interface Modul without Communication resistor. Order number: 52017694.

BA267F/00/de

Interface Modul with Communication resistor. Order number: 52017695.

BA268F/00/en

HART-Multiplexer Master KFD2-HMM-16. Order number: 52017696.

BA283F/00/en

HART Multiplexer slave KFD0-HMS-16. Order number: 52021044.

TI081R/09/en

Technical Information for Power Supply RNS221.

KA110F/09/a3

Operating Instructions for Power Supply RNS221. Order number: 51002645.

TI073R/09/en

Technical Information for Active Barrier RN221N.

KA124R/09/a3

Operating Instructions for Active Barrier RN221N. Order number: 51003567.

TI063R/09/en

Technical Information for Process Display RIA251 (1 channel).

BA087R/09/a6

Operating Instructions for Process Display RIA251. Order number: 51000471.

Documentation for:

- Process display OC7421 (8-channel), see accompanying Operating Instructions.

Instruments International

Endress+Hauser
Instruments International AG
Kaegenstrasse 2
4153 Reinach
Switzerland

Tel. +41 61 715 81 00
Fax +41 61 715 25 00
www.endress.com
info@ii.endress.com

Endress+Hauser
People for Process Automation

TI00030/04/en/13.11
71154148
FM9.0