BA00401G/08/EN/08.16
71328078

Operating Instruction
Proservo NMS5

Intelligent Tank Gauge

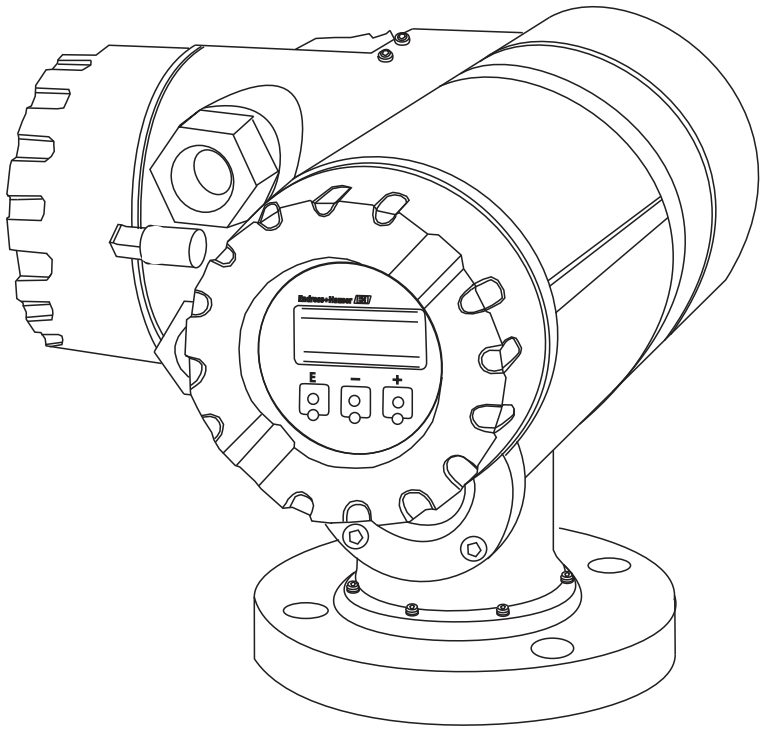

Endress+Hauser
People for Process Automation

Table of contents

1 Safety instructions 3
1.1 Designated use 3
1.2 Installation, commissioning, and operation 3
1.3 Product requirements 3
1.4 Operational safety 4
1.5 Electrostatic charge 4
1.6 Notes on safety conventions and symbols 5
1.7 Symbols for certain types of information 5

2 Identification 6
2.1 Device designation 6
2.2 Order Information 13
2.3 Scope of delivery 16
2.4 Certificates and approvals 16
2.5 Registered trademarks 16

3 Installation 17
3.1 Incoming acceptance, transport, and storage 17
3.2 Terms related to tank measurements 18
3.3 Design and dimensions 19
3.4 Necessary tools for installation 20

4 Displacer and measuring wire 21
4.1 Shape, diameter, and material 21

5 Installation 22
5.1 Type of tanks 22
5.2 Type of tank installation 24
5.3 Mounting without guide system 25
5.4 Mounting with a stilling well 26
5.5 Mounting NMS5 with guide wire 31
5.6 Alignment of NMS5 32
5.7 Electrostatic charge 33
5.8 Mounting of the device 35

6 Wiring 43
6.1 Wiring connection 43
6.2 Terminal assignment 44
6.3 Temperature input system 48

7 Operation 50
7.1 Touch control and programming matrix 50
7.2 HOME position 53
7.3 Access code 55
7.4 Operation command and new operation status 55
7.5 Operation of displacer 57
7.6 Calculation of level and densities 58

8 Commissioning 60
8.1 Initial settings 60
8.2 Settings for NMT 53x connections 64
8.3 Settings for connection to NRF560 65
8.4 Liquid level calibration 66
8.5 Remote communications 69
8.6 Density and density profile measurements 75
8.7 Interface measurement 82
8.8 Sealing of NMS5 83

9 Maintenance 84
9.1 Exterior cleaning 84
9.2 Seals replacement 84
9.3 Repairs 84
9.4 Repairs to Ex-approved devices 84
9.5 Replacement 84

10 Accessories 85
10.1 Calibration chamber 85
10.2 Power and control switch 85
10.3 Ball valve NHV4A 86
10.4 Reducing flange NHF4 86

11 Diagnosis and troubleshooting 87
11.1 Selection of diagnostic code and history 87
11.2 Error and status messages 88
11.3 Alarm history display 90
11.4 List of alarm messages 90
11.5 Flowcharts for diagnostics and troubleshooting 91
11.6 Setting after parts replacement 97
11.7 Intelligent function 98
11.8 Return 98
11.9 Disposal 98
11.10 Software History 99

12 Adjustment 100
12.1 Sensor calibration 100
12.2 Weight calibration 103

13 Technical data 106

14 Matrix 108
14.1 Programming Matrix 108
14.2 Description of Programming Matrix 118

15 Appendix 154
15.1 RS 485 MODBUS (COM- 5) terminator 154
15.2 Measurement wire replacement 156

1 Safety instructions

1.1 Designated use

Proservo NMS5 of intelligent tank gauge is designed for high-accuracy liquid level measurement in storage and process applications.
NMS5 performs the tank inventory management, loss control, total cost saving, and safe operation.
NMS5 is designed for the purpose of single or multi-task installations, converting a wide range of measurement functions.

1.2 Installation, commissioning, and operation

- Mounting, electrical installation, start-up, and maintenance of the instrument may only be performed by trained personnel authorized by the operator of the facility.
- Personnel must read and understand these installation instructions before performing the procedures.
- The instrument may only be operated by personnel who are authorized and trained by the operator of the facility. All instructions in this manual must be observed.
- The installer must make sure that the measuring system is correctly wired according to the wiring diagrams. The measuring system must be grounded.
- Observe all law and regulations applicable and valid for your country and pertaining to the opening and repairing of electrical devices.

1.3 Product requirements

Power source
Check the voltage of the power supply before connecting it to the product. It should be the exact voltage required for proper operation of the product.

Connection to other devices
It is possible to connect to other devices explained in this instruction. Refer to each operation instruction when connecting to devices.

Ground
Do not remove earth terminal or earth wire when the power is on.

Power cable
Use a power cable specified by our company. The product should be protectively grounded before it is connected to a measurement object or an external control circuit.

1.4 Operational safety

Hazardous area

- Use the explosion proof type for measurement in areas where explosion hazards are present.
- Devices installed in areas having explosion hazards must not be opened when the power is on.
- Strict compliance with installation instructions and - ratings, as directed in this supplementary documentation, is mandatory.
- Device maintenance and repair is restricted to meet explosion proof regulations.
- Tighten the cable gland firmly.
- Devices employed in areas having explosion hazards should be installed and wired in keeping with explosion proof regulations.
- Ensure that all personnel are properly qualified.
- Observe the certification requirements as well as national and local regulations.

⚠ WARNING

Changes or modifications other than those expressly approved by Endress+Hauser are strictly prohibited. Unauthorized modifications can cause malfunction or damage, resulting in serious injury or death.

1.5 Electrostatic charge

Mounting with a stilling well is recommended for use in a tank which contains flammable liquid with conductivity at 10^{-8} S/m or less.
In case of installation without a stilling well, allow enough stilling time according to the table below before lowering the level gauge down to the liquid surface. When a stilling well is used, the stilling time is shown as in column "<10" in the table below.

Conductivity (S/cm)	Reference: Stilling time (min.)			
	Liquid volume in tank (m^3)			
	≤10	10~50	50~100	≥5000
$\geq 10^{-8}$	≥1	≥1	≥1	≥2
$10^{-12} \sim 10^{-8}$	≥2	≥3	≥10	≥30
$10^{-14} \sim 10^{-12}$	≥4	≥5	≥60	≥120
$\leq 10^{-14}$	≥10	≥10	≥120	≥240

(Japan National Institute of Occupational Safety and Health)

1.6 Notes on safety conventions and symbols

To highlight safety-relevant or alternative operating procedures in this manual, the following conventions have been used, each indicated by a corresponding symbol on the left.

Symbol	Meaning
 A0011189-EN	**DANGER!** This symbol alerts you to a dangerous situation. Failure to avoid this situation will result in serious or fatal injury.
 A0011190-EN	**WARNING!** This symbol alerts you to a dangerous situation. Failure to avoid this situation can result in serious or fatal injury.
 A0011191-EN	**CAUTION!** This symbol alerts you to a dangerous situation. Failure to avoid this situation can result in minor or medium injury.
 A0011192-EN	**NOTICE!** This symbol contains information on procedures and other facts which do not result in personal injury.

1.7 Symbols for certain types of information

Symbol	Meaning
 A0011182	**Allowed** Indicates procedures, processes or actions that are allowed.
 A0011183	**Recommendation** Indicates procedures, processes or actions that are recommended.
 A0011184	**Forbidden** Indicates procedures, processes or actions that are forbidden.
 A0011193	**Tip** Indicates additional information.

2 Identification

2.1 Device designation

2.1.1 Nameplate

The following technical data are given on the instrument nameplate:

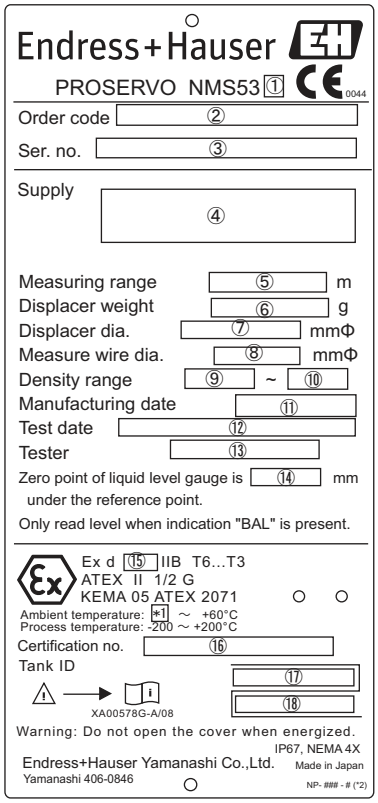

1	Type code
2	Order code
3	Serial number
4	Power supply specification
5	Measuring range
6	Displacer weight
7	Displacer diameter
8	Measuring wire diameter
9	Density measurement lower limit
10	Density measurement upper limit
11	Date of manufacture
12	Date of manufacture test
13	Name of tester
14	Reference point (W&M)
15	Protection Class
16	NMi W&M Certificate number
17	PTB W&M Certificate number
18	PTB W&M Certificate number

*1: -20°C or -40°C is selected depending on the product specification.
*2: NP-2514-X for -20°C, NP-2515-X for -40°C

Figure 1: ATEX approval type Ex d/Ex d [ia]

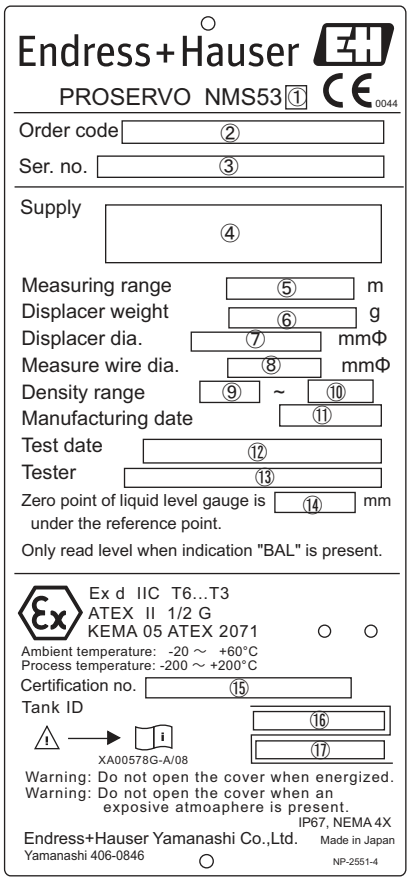

1	Type code
2	Order code
3	Serial number
4	Power supply specification
5	Measuring range
6	Displacer weight
7	Displacer diameter
8	Measuring wire diameter
9	Density measurement lower limit
10	Density measurement upper limit
11	Date of manufacture
12	Date of manufacture test
13	Name of tester
14	Reference point
15	NMi W&M Certificate number
16	PTB W&M Certificate number
17	PTB W&M Certificate number

Figure 2: ATEX approval type Ex d

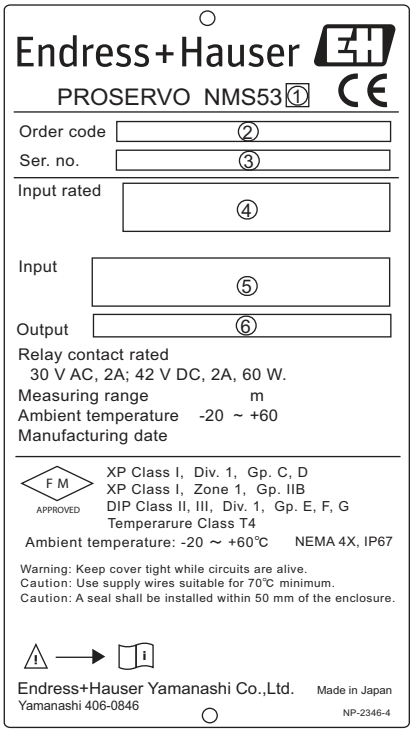

1	Type code
2	Order code
3	Serial number
4	Input rating
5	Signal input specification
6	Signal output specification

Figure 3: FM approval type XP

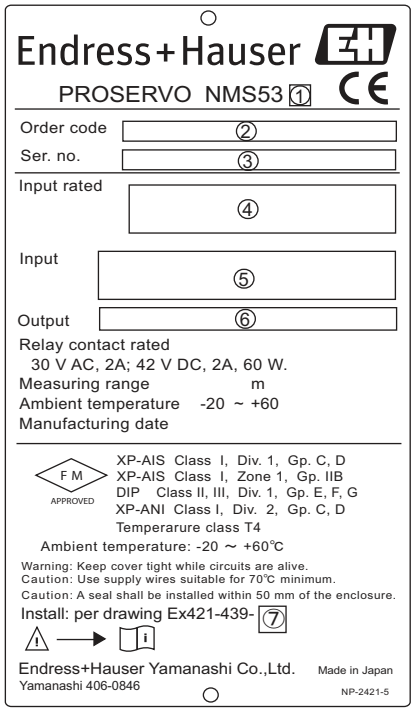

1	Type code
2	Order code
3	Serial number
4	Input rating
5	Signal input specification
6	Signal output specification
7	XA version number

Figure 4: FM approval type XP-AIS

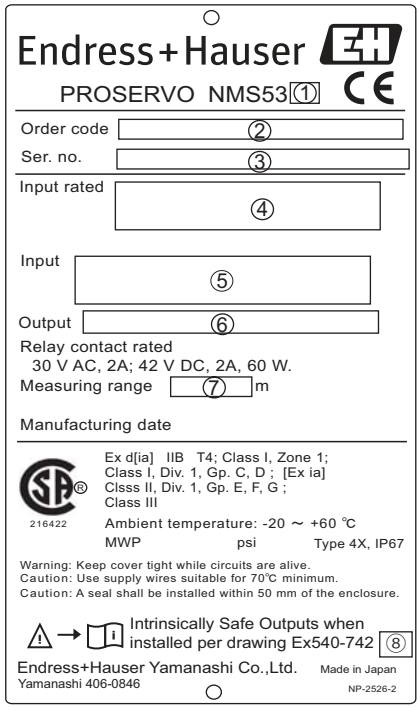

1	Type code
2	Order code
3	Serial number
4	Input rating
5	Signal input specification
6	Signal output specification
7	Measuring rage
8	XA version number

Figure 5: CSA approval type Ex d[ia]

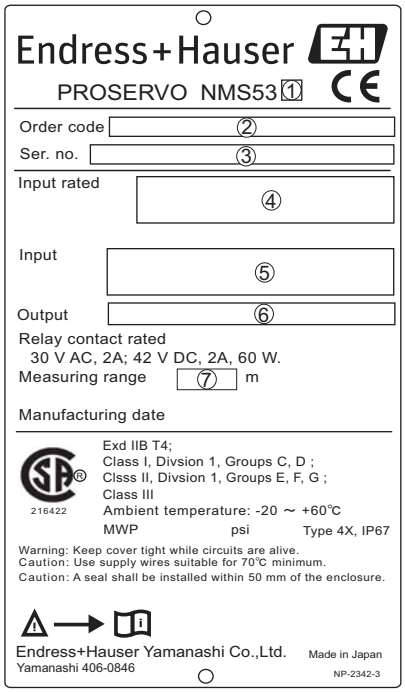

1	Type code
2	Order code
3	Serial number
4	Input rating
5	Signal input specification
6	Signal output specification
7	Measuring rage

Figure 6: CSA approval type Ex d

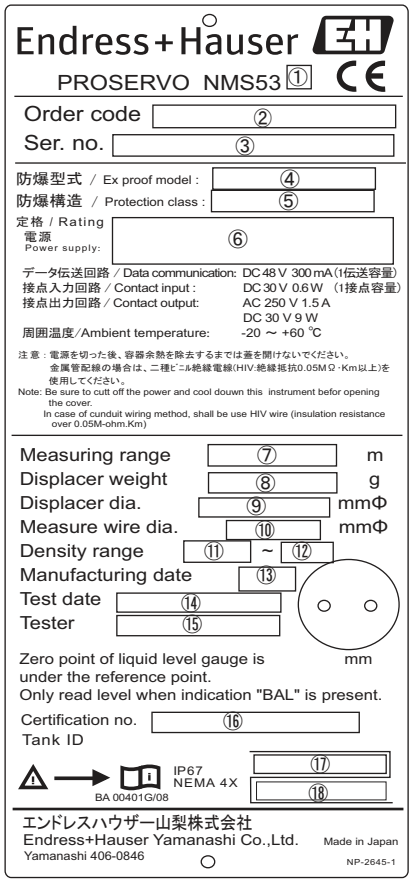

1	Type code
2	Order code
3	Serial number
4	Ex-proof model
5	Protection class
6	Power supply specification
7	Measuring range
8	Displacer weight
9	Displacer diameter
10	Measuring wire diameter
11	Density measurement lower limit
12	Density measurement upper limit
13	Date of manufacture
14	Date of manufacture test
15	Name of tester
16	NMi W&M Certificate number
17	PTB W&M Certificate number
18	PTB W&M Certificate number

Figure 7: TIIS approval type Ex d

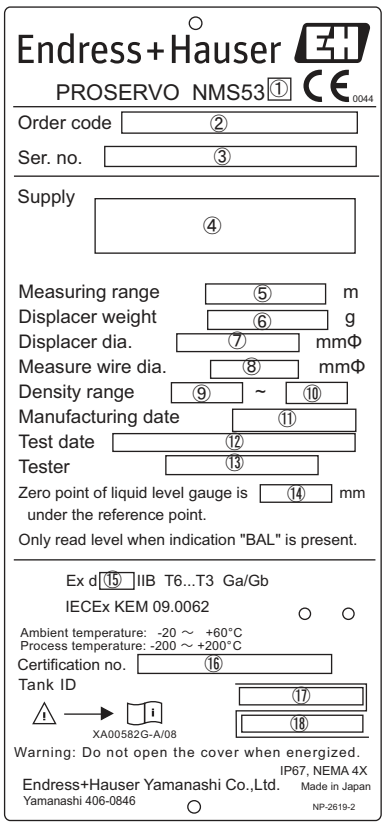

1	Type code
2	Order code
3	Serial number
4	Power supply specification
5	Measuring range
6	Displacer weight
7	Displacer diameter
8	Measuring wire diameter
9	Density measurement lower limit
10	Density measurement upper limit
11	Date of manufacture
12	Date of manufacture test
13	Name of tester
14	Reference point
15	Protection class
16	NMi W&M Certificate number
17	PTB W&M Certificate number
18	PTB W&M Certificate number

Figure 8: IEC approval type Ex d -20°C

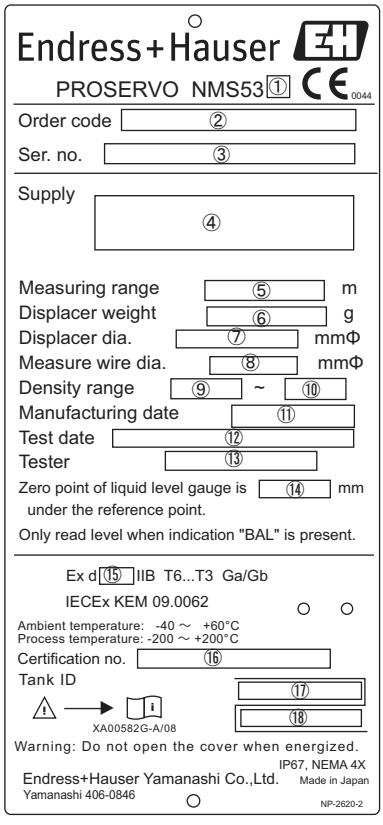

1	Type code
2	Order code
3	Serial number
4	Power supply specification
5	Measuring range
6	Displacer weight
7	Displacer diameter
8	Measuring wire diameter
9	Density measurement lower limit
10	Density measurement upper limit
11	Date of manufacture
12	Date of manufacture test
13	Name of tester
14	Reference point
15	Protection class
16	NMi W&M Certificate number
17	PTB W&M Certificate number
18	PTB W&M Certificate number

Figure 9: IEC approval type Ex d -40°C

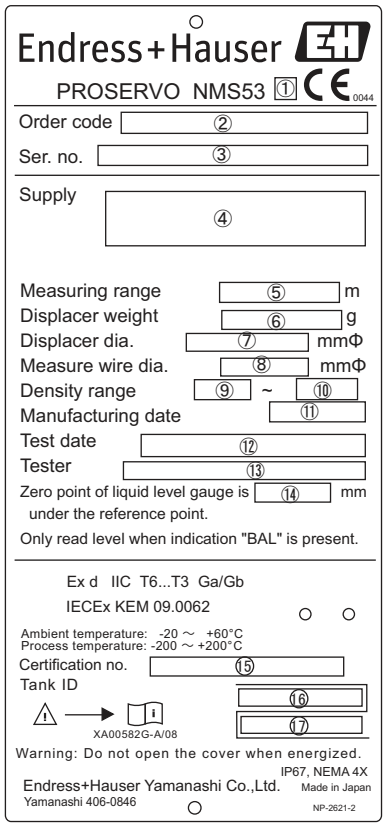

1	Type code
2	Order code
3	Serial number
4	Power supply specification
5	Measuring range
6	Displacer weight
7	Displacer diameter
8	Measuring wire diameter
9	Density measurement lower limit
10	Density measurement upper limit
11	Date of manufacture
12	Date of manufacture test
13	Name of tester
14	Reference point
15	NMi W&M Certificate number
16	PTB W&M Certificate number
17	PTB W&M Certificate number

Figure 10: IEC approval type Ex d IIC

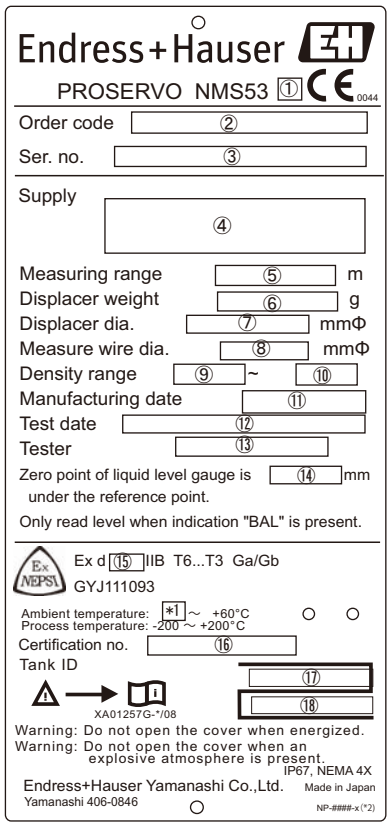

1	Type code
2	Order code
3	Serial number
4	Power supply specification
5	Measuring range
6	Displacer weight
7	Displacer diameter
8	Measuring wire diameter
9	Density measurement lower limit
10	Density measurement upper limit
11	Date of manufacture
12	Date of manufacture test
13	Name of tester
14	Reference point
15	Protection class
16	NMi W&M Certificate number
17	PTB W&M Certificate number
18	PTB W&M Certificate number

*1: -20°C or -40°C is selected depending on the product specification.
*2: NP-2692 for -20°C, NP-2693 for -40°C

Figure 11: NEPSI approval type IIB

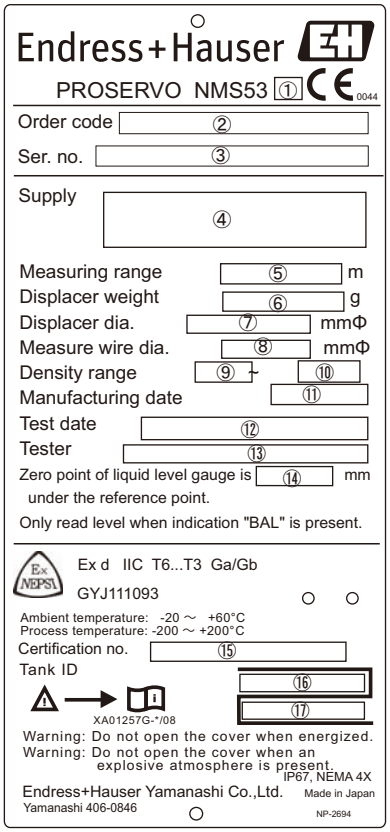

1	Type code
2	Order code
3	Serial number
4	Power supply specification
5	Measuring range
6	Displacer weight
7	Displacer diameter
8	Measuring wire diameter
9	Density measurement lower limit
10	Density measurement upper limit
11	Date of manufacture
12	Date of manufacture test
13	Name of tester
14	Reference point
15	NMi W&M Certificate number
16	PTB W&M Certificate number
17	PTB W&M Certificate number

Figure 12: NEPSI approval type IIC

2.2 Order Information

010	**Drum Housing Pressure Rating; Material:**	
	1	0··· 200mbar/20kPa/2.9psi; Alu
	2	0··· 200mbar/20kPa/2.9psi; stainless ste>
	4	0··· 5.88bar/588kPa/85.28psi; Alu
	5	0··· 5.88bar/588kPa/85.28psi; stainless steel
	6	0··· 24.5bar/2.45MPa/355.34psi; stainless steel
	9	Special version, TSP-no. to be spec.

020	**Approval:**	
	0	Weather proof, IP 67 NEMA 4X
	1	TIIS Ex d IIB T4
	5	FM XP Cl. I Div. 1 Gr. C-D
	N	FM XP-AIS Cl. I Div.1 Gr. C-D
	6	CSA Cl. I Div. 1 Gr. C-D
	O	CSA Ex d[ia] Cl. I Div. 1 Gr. C-D
	G	ATEX II 1/2G Ex d IIB T6...T3
	Q	ATEX II 1/2G Ex d IIC T6...T3
	S	ATEX II 1/2G Ex d IIB T6...T3, -40°C
	J	ATEX II 1/2G Ex d (ia) IIB T6...T3
	U	ATEX II 1/2G Ex d (ia) IIB T6...T3, -40°C
	A	IEC Ex d ia IIB T6...T3 Ga/Gb
	B	IEC Ex d IIB T6...T3 Ga/Gb
	C	IEC Ex d IIC T6...T3 Ga/Gb
	D	IEC Ex d ia IIB T6...T3 Ga/Gb, -40°C
	E	IEC Ex d IIB T6...T3 Ga/Gb, -40°C
	T	NEPSI Ex d ia IIB T6...T3
	V	NEPSI Ex d IIB T6...T3
	W	NEPSI Ex d IIC T6...T3
	X	NEPSI Ex d ia IIB T6...T3, -40°C
	4	NEPSI Ex d IIB T6...T3, -40°C
	9	Special version, TSP-no. to be spec.

030	**Application:**	
	A	Liquid Level
	B	PTB (<1mm) type approval, liquid level
	C	NMi (<1mm) type approval, liquid level
	D	Multi measurement, liquid level, I/F level, bottom, density
	E	PTB (<1mm) type approval, liquid level, I/F level, bottom, density
	F	NMi (<1mm) type approval, liquid level, I/F level, bottom, density
	G	Density profile multi measurement, liquid level, I/F level, bottom, density
	H	PTB (<1mm)type approval, density profile, liquid level, I/F level, bottom, density
	J	NMi (<1mm) type approval, density profile, liquid level, I/F level, bottom, density
	Y	Special version, TSP-no. to be spec.

040	**Output 1:**	
	F	Not selected
	A	2-way 2-wire (V1 protocol)
	J	2-way 2-wire (MDP protocol)
	B	2-way 2-wire (BBB protocol)
	C	2-way 2-wire (MIC, RS232C protocol)
	D	2-way 2-wire (MIC protocol)
	G	HART active
	H	HART passive
	L	Whessmatic 550, overvoltage protection
	M	Mark Space
	N	Enraf BPM
	P	Modbus RS 485
	Y	Special version, TSP-no. to be spec.

NMS5-	**Product designation (Continued on next page)**

050	**Output 2:**	
	0	Not selected
	1	4 x relay SPST
	2	2 x 4-20mA
	3	4 x relay SPST, 2 x 4 - 20mA
	4	2 x relay SPST, Overspill prevention TÜV
	5	4 x relay SPST, 1 x 4 - 20mA
	9	Special version, TSP-no. to be spec.

060	**Input:**	
	0	HART (NMT5xx, NRF560, pressure transmitter)
	1	1 x spot temperature Pt100, HART (NRF560, pressure transmitter)
	2	2 x operation contact, HART (NMT5xx, NRF560, pressure transmitter)
	3	1 x spot temperature Pt100, 2 x operation contact, HART (NMT5xx, NRF560, pressure transmitter)
	4	1 x status, HART (NMT5xx, NRF560, pressure transmitter)
	5	1 x spot temperature Pt100, 1 x status, HART (NMT5xx, NRF560, pressure transmitter)
	6	1 x spot temperature Pt100, 1 x status, 2 x operation contact, HART (NMT5xx, NRF560, pressure transmitter)
	9	Special version, TSP-no. to be spec.

070	**Measuring Range; wire:**	
	C	0 - 28m; SUS316L, 0.15mm
	L	0 - 36m; SUS316L, 0.15mm
	N	0 - 47m; SUS316L, 0.15mm
	H	0 - 16m; PFA>SUS316, 0.4mm
	K	0 - 16m; Alloy C, 0.2mm
	M	0 - 22m; Alloy C, 0.2mm
	Y	Special version, TSP-no. to be spec.

080	**Cable Entry:**	
	E	4 x thread G1/2
	F	4 x thread G3/4
	G	4 x thread NPT1/2
	H	4 x thread NPT3/4
	L	4 x thread M20
	M	4 x thread M25
	Y	Special version, TSP-no. to be spec.

090	**Process Connection:**	
	A	10K 80A RF, flange JIS B2220
	C	10K 80A FF, flange JIS B2220
	U	10K 150A RF, flange JIS B2220
	E	20K 80A RF, flange JIS B2220
	G	NPS 3" Cl.150 RF, flange ASME B16.5
	J	NPS 3" Cl.300 RF, flange ASME B16.5
	W	NPS 4" Cl.300 RF, flange ASME B16.5
	T	NPS 6" Cl.150 RF, flange ASME B16.5
	L	DN80 PN10 B1, flange EN1092-1 (DIN2527 B)
	N	DN80 PN25 B1, flange EN1092-1 (DIN2527 B)
	Q	80A 150lbs RF, flange JPI 7S-15
	S	80A 300lbs RF (apply for NMS5-6), flange JPI 7S-15
	Y	Special version, TSP-no. to be spec.

100	**Power supply:**	
	3	85 - 264 VAC, 50/60 Hz
	4	20 - 62 VDC, 20 - 55 VAC, 50/60 Hz
	Y	Special version, TSP-no. to be spec.

NMS5-	**Product designation (Continued on next page)**

110	**Displacer:**	
	N	Cylindrical 30 mm, SUS316
	K	Cylindrical 40 mm, SUS316
	D	Cylindrical 50 mm, SUS316
	W	Cylindrical 30 mm, PTFE
	V	Cylindrical 40 mm, PTFE
	U	Cylindrical 50 mm, PTFE
	T	Cylindrical 50 mm, Alloy C
	B	Conical 50 mm, PTFE
	R	Conical 70 mm, SUS316
	S	Conical 110 mm, SUS316
	Y	Special version, TSP-no. to be spec.

120	**O-ring; chamber finishing:**	
	0	NBR; not selected
	1	Silicon rubber; not selected
	5	Silicone rubber; FEP coated
	3	PTFE (wire drum FKM); not selected
	4	PTFE (Wire drum FKM); FEP coated
	6	CR; not selected
	2	FKM; not selected
	7	FKM; FEP coated
	8	FFKM; not selected
	A	FFKM; FEP coated
	9	Special version, TSP-no. to be spec.

130	**Options:**	
	A	not selected
	C	Rc3/8 cleaning nozzle
	D	Rc3/8 gas purging nozzle
	E	Guide wire installation
	G	Relief valve
	H	Relief valve, pressure gauge
	J	Sunshade
	L	Rc3/8 gas purging nozzle, sunshade
	M	Rc3/8 cleaning nozzle, sunshade
	N	Rc3/8 gas purging nozzle, guide wire installation
	P	Rc3/8 cleaning nozzle, guide wire installation
	Q	Guide wire installation, sunshade
	R	Relief valve, guide wire installation
	S	Relief valve, pressure gauge, guide wire installation
	T	Relief valve, sunshade
	U	Relief valve, pressure gauge, sunshade
	Y	Special version, TSP-no. to be spec.

NMS5-	**Complete product designation**

2.3 Scope of delivery

WARNING

It is extremely important to follow the instructions concerning the unpacking, transportation and storage of measuring instruments provided in the chapter “Incoming Acceptance, Transportation, Storage”.

The scope of delivery consists of:

- Assembled Instrument

Accompanying documentation:

- Installation Instructions (this manual)
- Safety Instructions (XA)
- Functional Safety Manual (SD), Supplied with 4 to 20mA and Overspill Prevention Relay Output

2.4 Certificates and approvals

CE Mark, declaration of conformity
The device is designed to meet state-of-the-art safety requirements, has been tested and left the factory in a condition in which it is safe to operate. The device complies with the applicable standards and regulations as listed in the EC declaration of conformity and thus complies with the statutory requirements of the EC directives. Endress+Hauser confirms the successful testing of the device by affixing to it the CE mark.

2.5 Registered trademarks

HART®
Registered trademark of HART Communication Foundation, Austin, USA

FieldCare®
Registered trademark of the company Endress+Hauser Flowtec AG, Rheinach, CH

3 Installation

3.1 Incoming acceptance, transport, and storage

3.1.1 Incoming acceptance

Check the packing and contents for any signs of damage.
Check the shipment, and make sure that nothing is missing and that the items match your order.

3.1.2 Transport

⚠ WARNING

- Follow the safety instructions and conditions of transportation for instruments in excess of 18kg (40 lbs.).
- Do not lift the measuring instrument by its housing during transportation.

3.1.3 Storage

Pack the measuring instrument so that it is protected against impacts during storage and transportation.
The original packing material provides the optimum protection for this.
The allowed storage temperature is -40 to +85°C (-40 to +185°F)

3.2 Terms related to tank measurements

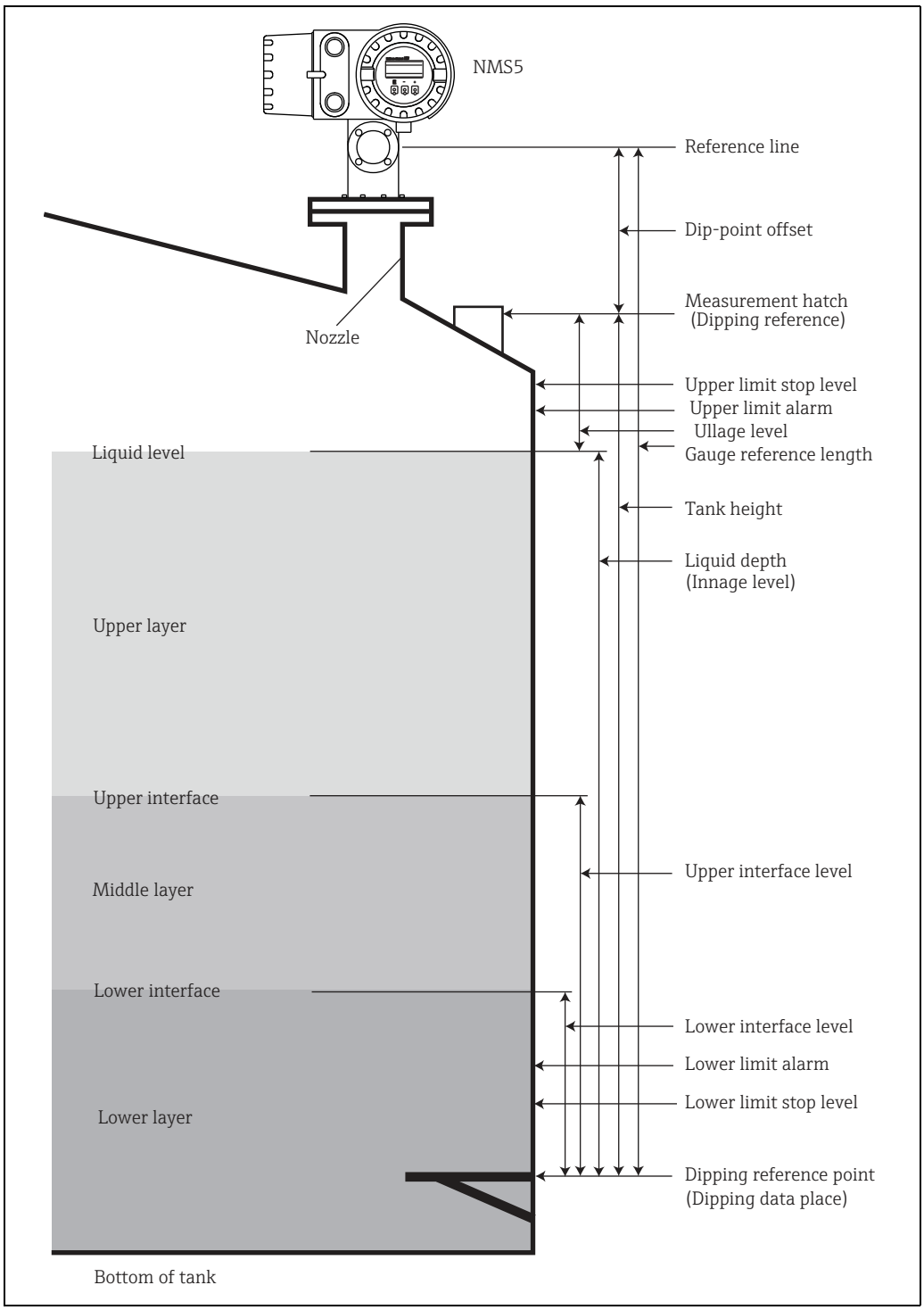

Figure 13: Terms related to tank measurements

3.3 Design and dimensions

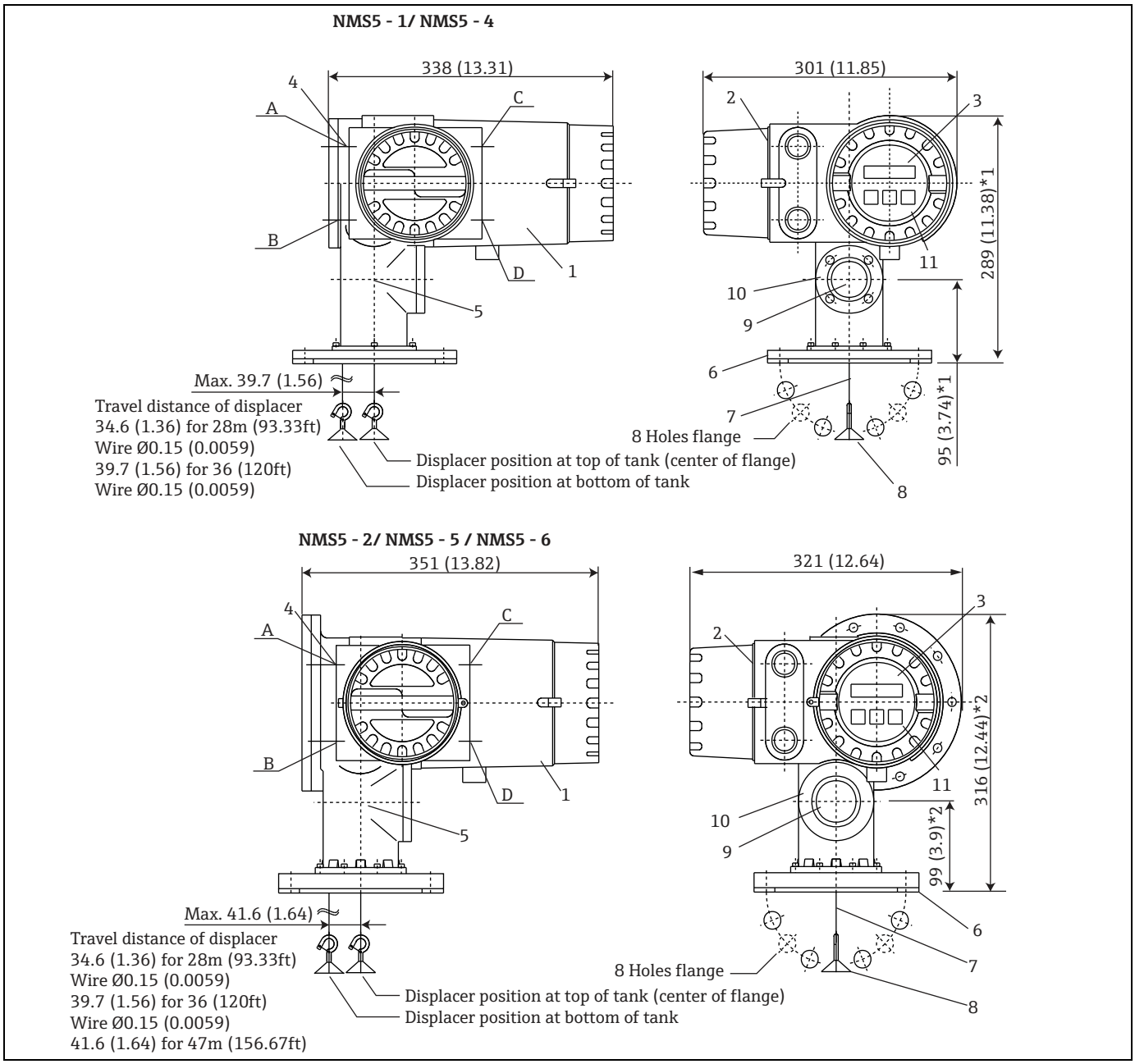

Figure 14: NMS5 dimension, unit of measurement: mm (in)

1	Electrical compartment	7	Measuring wire
2	Terminal box	8	Displacer
3	Display (LCD)	9	Calibration window
4	Cable entry (A, B, C, D)	10	Window cover
5	Wire drum housing	11	Touch control
6	Flange		

NOTICE

*1: In case of 18mm (Flange thickness) at JIS10K80ARF
*2: In case of 20mm (Flange thickness) at JIS20K80ARF

3.4 Necessary tools for installation

The following tools are required when installing NMS5.

Box end wrench	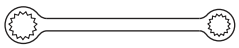 17 (0.669) and size matched with flange size
Crescent wrench	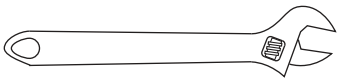 350 (13.78)
Allen wrench (Hex key)	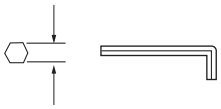 3 (0.118)/5 (0.196)
Screw driver ・Flat head ・Phillips	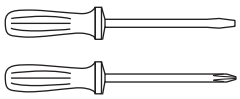
Wire cutters or terminal pliers	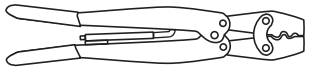
Wire terminal	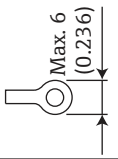 M3 1.25sq, 2.0sq
Water pump pliers	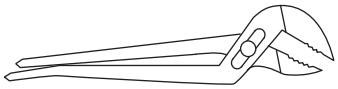
Density calibration test weight	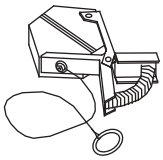

Figure 15: Tools to be prepared, unit of measurement: mm (in)

4 Displacer and measuring wire

4.1 Shape, diameter, and material

4.1.1 Displacer

There are several types of displacer available for NMS5.

- The standard type has cylindrical shape and a diameter of 50 mm. Diameters from 30 to 50 mm are optional.
- Cylindrical shape is used for viscous liquids. It is also effective if the stilling well is not smooth on its interior surface.

Displacer weight and volume depend on the application. Thin displacers are suited for level measurement, thicker ones for bottom level, interface level, and density measurement.
A counterweight is optional for heavy turbulence (inquire).
Displacers of three different materials are provided.

- The standard material is stainless steel SUS316.
- Alloy C and PFA are optional for corrosive liquids.
- Solid PFA, however, is not applied for flammable liquids.

The following size of displacer will be supplied, when you order custody transfer approval.

NMi (Netherlands).....Ø70 (2.76)
PTB (Germany).....Ø110 (4.33)

4.1.2 Measuring wire

- The standard material of the measuring wire is stainless steel SUS316L.
- Alloy C and PFA coated stainless steel SUS316 are for corrosive liquids.

The following specification of measuring will be supplied when ordering the custody transfer approval.

- Select SUS316L (0.15mm) for NMi and PTB specifications.
- Refer to the separate "Techenical Information TI00452G" for displacer selection information and Appendix "15.3 Displacer" in this chapter.

5 Installation

5.1 Type of tanks

Depending on the type of tank and application, different installation procedures are recommended for NMS5.

Type of tanks	Without guide system	With stilling well	With guide wires
fixed roof tank	✓✓ 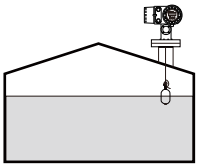	✓✓ 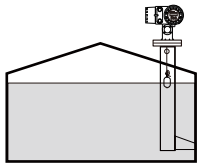	✓✓ 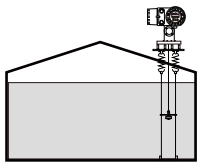
Floating roof tank	✗	✓✓ 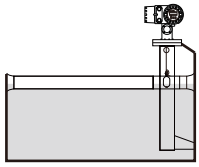	✗
Covered floating roof tank	✗	✓✓ 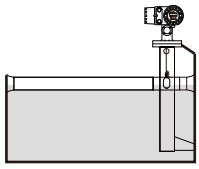	✗
Pressurized or bullet tank	✗	✓✓ 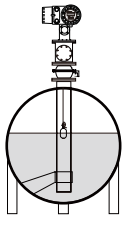	✗
Tank with agitator or heavy turbulence	✗	✓✓ 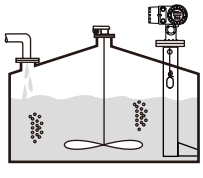	✓✓ 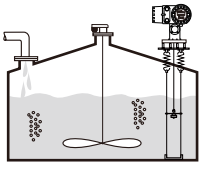

- A stilling well is required in a floating roof tank and a covered floating roof tank.
- Guide wires cannot be installed in a floating roof tank. When the measuring wire is exposed to free space, it may break due to an external shock.
- Installing guide wires is not allowed in pressurized tanks because the wires would prevent closing the valve for replacing the wire, wire drum, or displacer. NMS5 installation position is important for applications without the guide wire system in order to prevent the measuring wire from being broken (refer to Alignment of NMS5 for details).
- Installing guide wires is not allowed in pressurized tanks because the wires would prevent closing the valve for replacing the wire, wire drum, or displacer. NMS5 installation position is important for applications without the guide wire system in order to prevent the measuring wire from being broken.

5.2 Type of tank installation

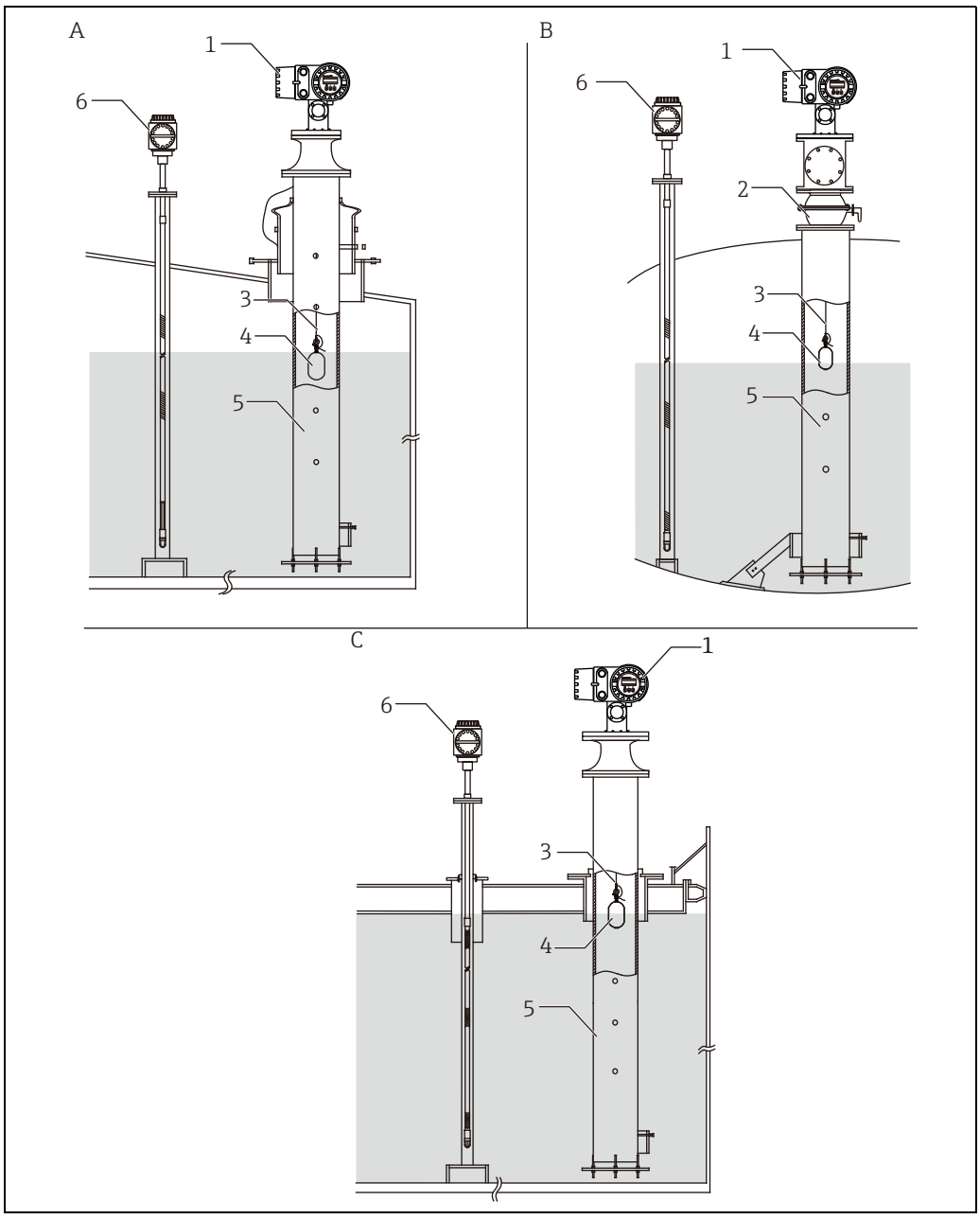

Figure 16: Typical tank installation

A *Fixed roof tank*
B *High pressure tank*
C *Floating roof tank with stilling well*
1 *NMS5*
2 *Ball valve*
3 *Measuring wire*
4 *Displacer*
5 *Stilling well*
6 *Prothermo NMT539*

5.3 Mounting without guide system

NMS5 is mounted on a nozzle of the tank roof without a guide system. Sufficient clearance inside the nozzle is necessary to allow the displacer to move without hitting the inner walls.

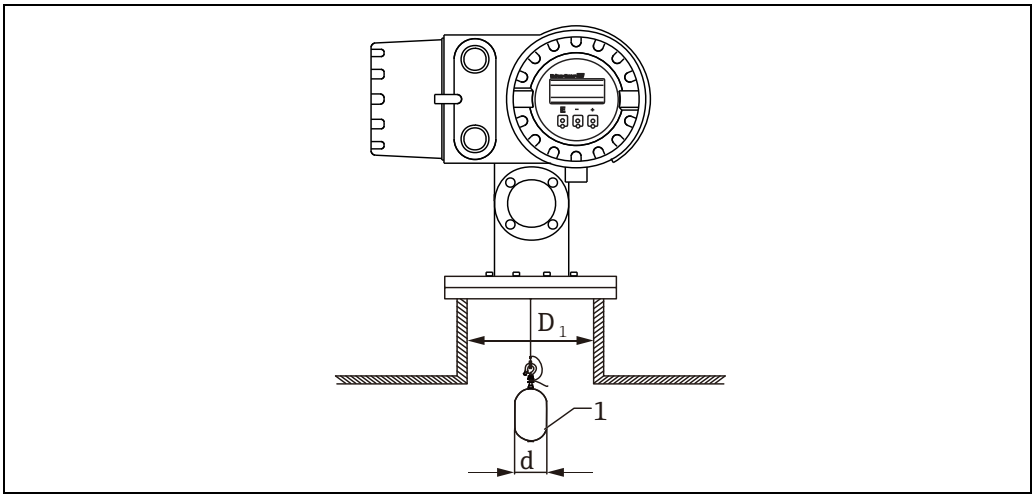

Figure 17: Mounting without guide system

D_1 *Inner Diameter of the tank nozzle*
d *Diameter of the displacer*
1 *Displacer*

5.4 Mounting with a stilling well

The stilling well diameter that is required to protect the measuring wire without disturbing its operation varies depending on the tank height. The stilling well could either be of constant diameter, or narrower at its upper part and wider at its lower part. The following figure shows two examples of the latter case, namely a concentric stilling well and an asymmetric stilling well.

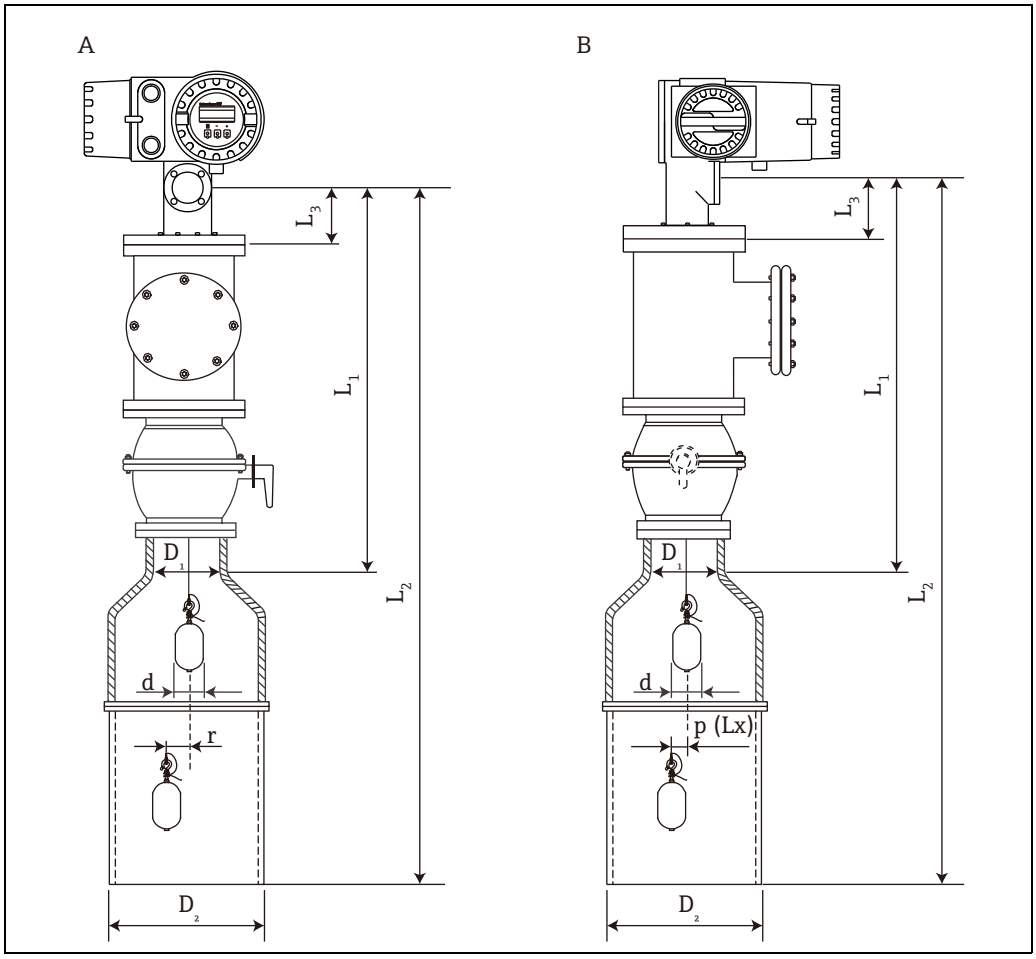

Figure 18: Mounting with connection pipe

A *Front view*
B *Side view*
L1 *Length from the center of the calibration window to the upper part of the stilling well*
L2 *Length from the center of the calibration window to the bottom of the stilling well*
L3 *Length from the center of the calibration window to the bottom of the flange*
D1 *Diameter of upper part of stilling well*
D2 *Diameter of stilling well*
d *Diameter of displacer*
p(Lx) *Longitudinal wire position from the center of the flange*
r *Radial direction offset*

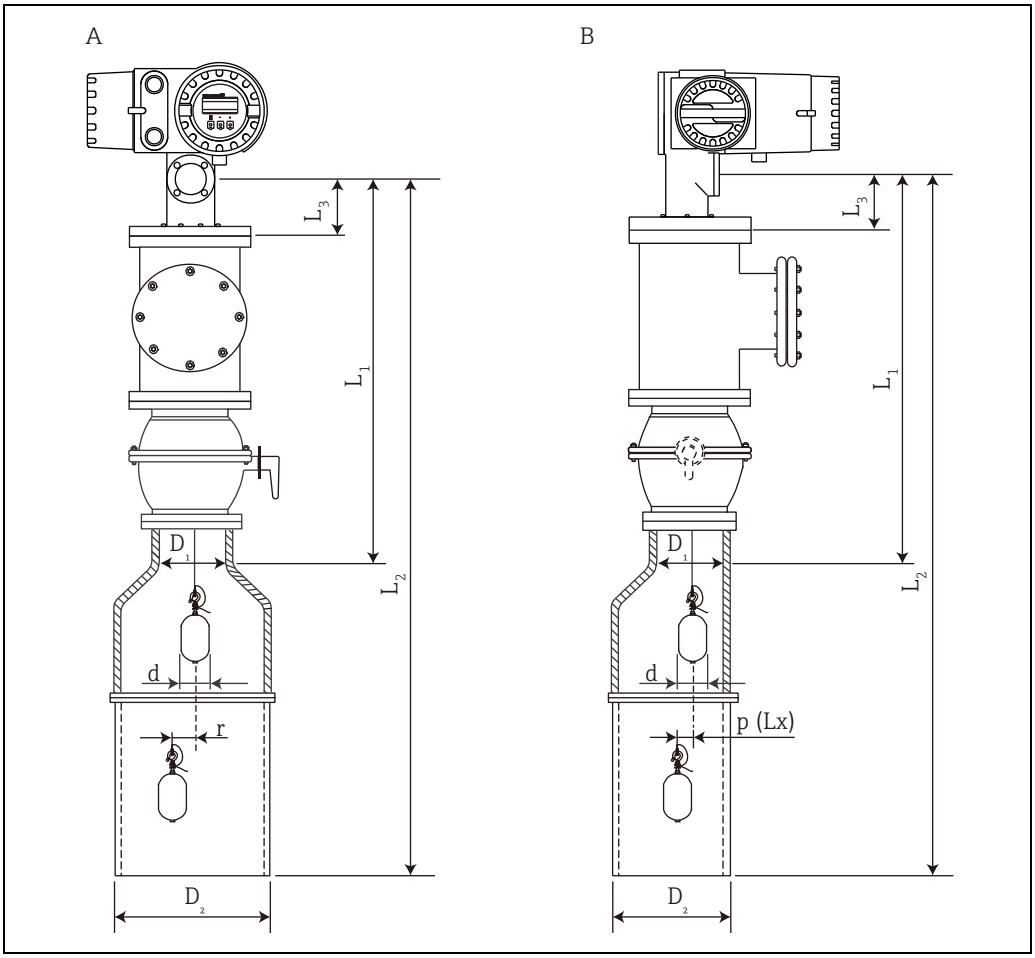

Figure 19: Mounting with asymmetric stilling well

A *Front view*
B *Side view*
L1 *Length from the center of the calibration window to the upper part of the stilling well*
L2 *Length from the center of the calibration window to the bottom of the stilling well*
L3 *Length from the center of the calibration window to the bottom of the flange*
D1 *Diameter of upper part of stilling well*
D2 *Diameter of stilling well*
d *Diameter of displacer*
p(Lx) *Longitudinal wire position from the center of the flange*
r *Radial direction offset*

- L3: length from center of the calibration window to the bottom of the flange (99 mm (3.9 in) + flange thickness). For JIS 10K 150A RF, the dimension is 99 mm (3.9 in) and the flange thickness is 22 mm (0.87 in).
- When using an asymmetric stilling well, take into account the lateral shift of the displacer and follow the NMS5 mounting direction as shown in the figure.
- To calculate the required stilling well diameters, the formula below should be used. The following tables contain the necessary parameters in order to calculate the dimensions of the stilling well. Be sure to have appropriate dimensions of the stilling well according to each dimension in the table.
- The radial direction offset is required for only the 47 m (154.2 ft) wire drum. For all other drums, the offset is 0 mm/in.

Symbol	Description
P (Lx)	Longitudinal wire position from the center of the flange
r	Radial direction offset
s	Safety factor recommended; 5.0mm (0.20 in)

Feature: 070	Descriptions	r
N	0-47m: SUS316L, 0.15mm	6 mm (0.24 in)

The following graph shows the lateral shift of the displacer depending on the measured distance for the different wire drums.

Feature: 110	Descriptions	d
B	Conical 50mm, PTFE	50mm (1.97 in)
D	Cylindrical 50mm, SUS316	50mm (1.97 in)
K	Cylindrical 40mm, SUS316	40 mm (1.57 in)
N	Cylindrical 30mm, SUS316	30 mm (1.18 in)
R	Conical 70mm, SUS316	70 mm (2.76 in)
S	Conical 110mm, SUS316	110 mm (4.33 in)
T	Cylindrical 50mm, AlloyC	50mm (1.97 in)
U	Cylindrical 50mm, PTFE	50mm (1.97 in)
V	Cylindrical 40mm, PTFE	40 mm (1.57 in)
W	Cylindrical 30mm, PTFE	30 mm (1.18 in)

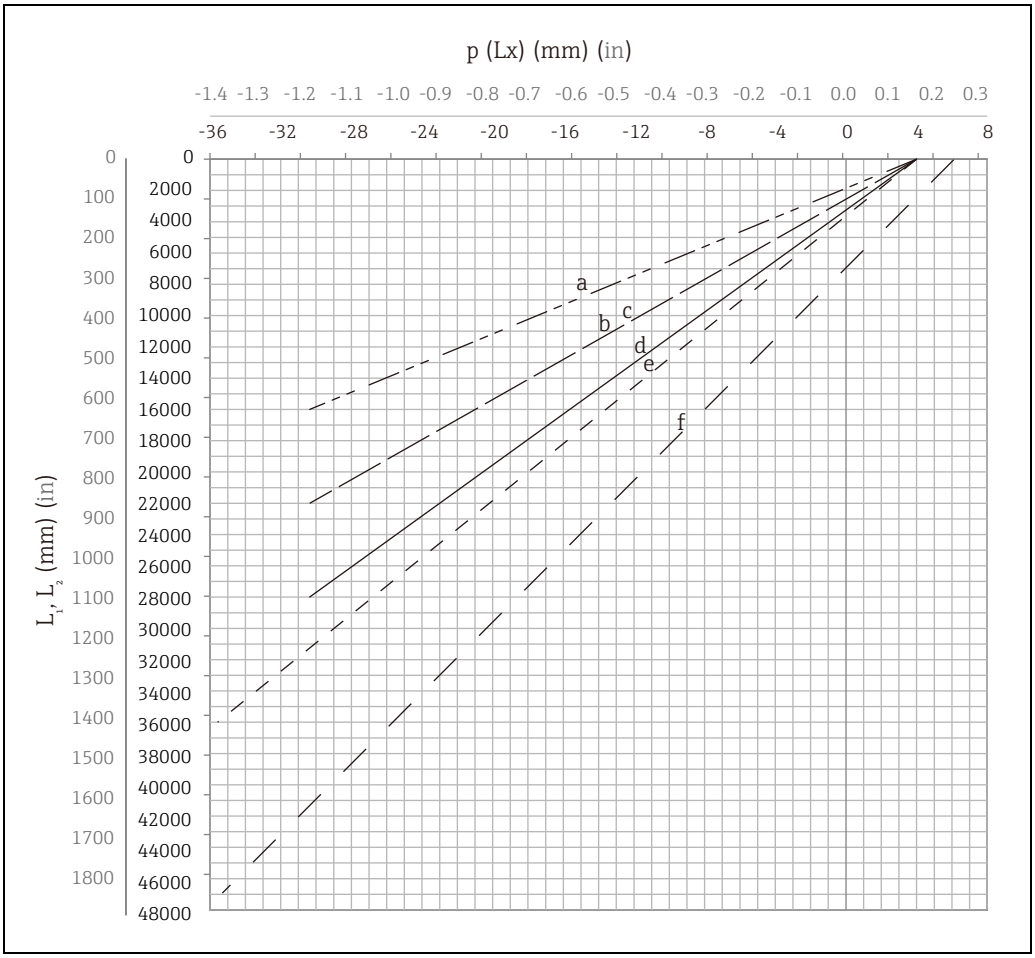

Figure 20: Lateral shift of displacer according to measurement range

a *0-16m: PFA>SUS316, 0.4mm*
b 0-16m: Alloy C, 0.2mm
c 0-22m: Alloy C, 0.2mm
d 0-28m: SUS316L, 0.15mm
e 0-36m: SUS316L, 0.15mm
f 0-47m: SUS316L, 0.15mm

Upper diameter of stilling well

The dimension of D_1 has to be the largest value of the dimensions D_{1a}, D_{1b}, D_{1c}, and D_{1d} according to the following formula.

D_1 Dimension (Example)	D_{1x} dimension		Description	Formula
	Example	Symbol		
>68.1 mm (2.68 in)	68.1mm (2.68in)	D_{1a}	D_1 dimension when the displacer is in $L_1 = 0$	= 2 x (| p (0) | + d/2 + s)
	65.6mm (2.58in)	D_{1b}	D_1 dimension when the displacer is in L_1 length	= 2 x (| p (L_1) | + d/2 + s)
	51.2mm (2.02in)	D_{1c}	D_1 dimension when the displacer is in L_2 length	= 2 x (| p (L_2) | + s)
	N/A	D_{1d}	D_1 dimension when the radial direction offset is considered. This calculation is used only with the 47 m (156.67 ft) wire drum (N in Feature 70)	= 2 x (d/2 + r + s)

Example: L_1 = 1 000 mm, L_2 = 20 000 mm, d = 50 mm, s = 5.0, 28 m drum

Lower Diameter of stilling well

The dimension of D_2 has to be the larger value of the dimensions D_1 and D_{2b}. See the graph above.

Concentric pipe

D_1 Dimension (Example)	D_{1x} dimension		Description	Formula
	Example	Symbol		
>101.2 mm (3.98 in)	68.1mm (2.68in)	D_1	Calculated D_1 Value	N/A
	101.2mm(3.98in)	D_{2b}	D_2 dimension when the displacer is in L_2 length	= 2 x (| p (L_2) | + d/2 + s)

Example: L_2 = 20 000 mm, d = 50 mm, s = 5.0, 28 m drum

Asymmetric pipe

D_1 Dimension (Example)	D_{1x} dimension		Description	Formula
	Example	Symbol		
>84.7 mm (3.33 in)	68.1mm (2.68in)	D_1	Calculated D_1 Value	N/A
	84.7mm(3.33in)	D_{2b}	D_2 dimension that the displacer can pass through (Nth groove)	= | p (L_2) | + d/2 + s + D_1/2

Example: L_2 = 20 000 mm, d = 50 mm, s = 5.0, 28 m drum

Recommendations for mounting stilling well

Follow the recommendations for mounting NMS5 with stilling well:

- Keep the pipe connection welds smooth.
- When drilling holes into the pipe, keep the interior surface of the holes clear of metal chips and burrs.
- Coat or paint the interior surface of the pipe to prevent corrosion.
- Keep the pipe as vertical as possible. Check using a plumb bob.
- Install the asymmetric pipe under the valve and fit the centers of the NMS5 and the valve.
- Set the center of the lower part of the asymmetric pipe in the direction of the lateral motion.
- Observe the recommendations as per API MPMS chapter 3.1B.
- Confirm grounding between NMS5 and the tank nozzle.

5.5 Mounting NMS5 with guide wire

It is also possible to guide the displacer by a guide wire to prevent swinging.

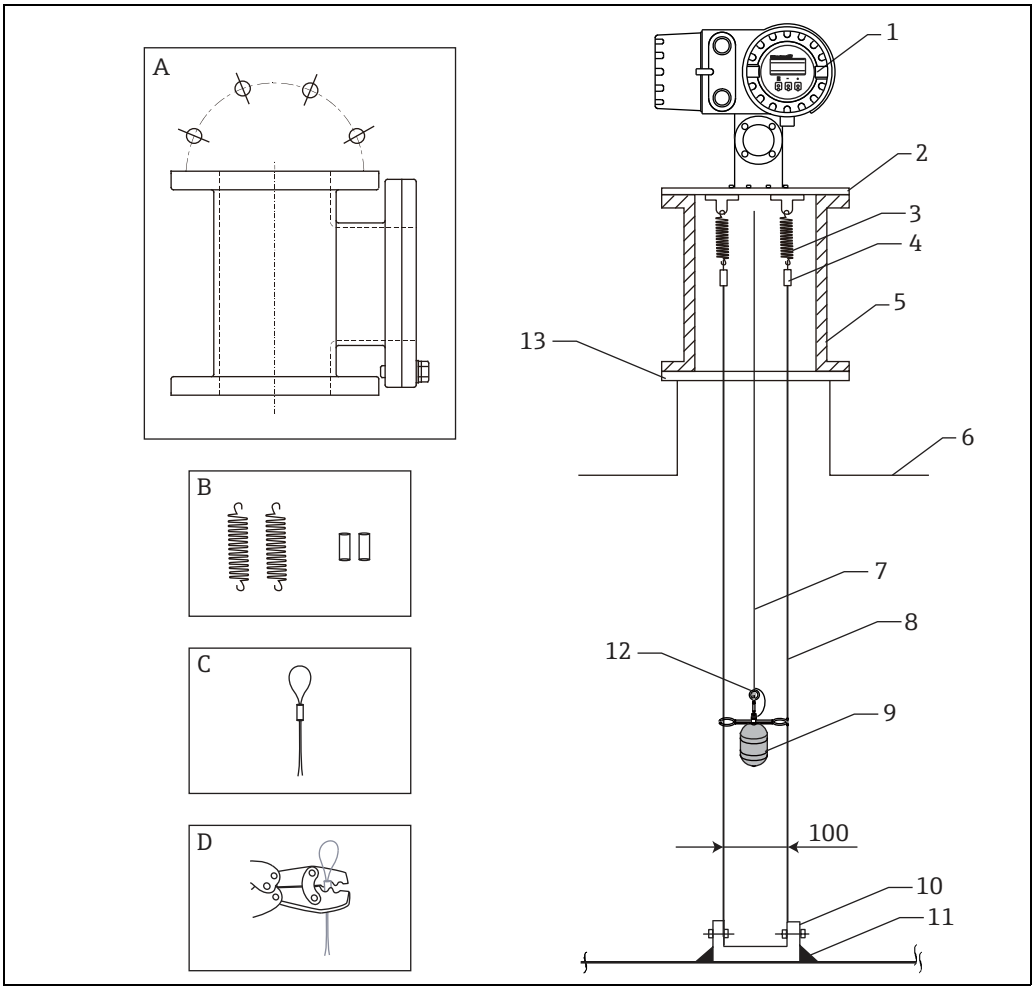

Figure 21: Mounting with guide wire, unit of measurement: mm (in)

No.	Description
A	Calibration chamber
B	Spring and sleeve
C	Guide wire sleeve
D	Crimp tool
1	NMS5
2	Reducer plate (for low pressure: 6mm (0.236 in)) Reduce flange (material is selectable from SS400 an SUS304.)
3	Spring, SUS304
4	Sleeve, SUS316
5	Calibration chamber for maintenance NHC4HP for high pressure, SCS13 equivalent to SUS304 NHC4LP for low pressure, SCS13 equivalent to SUS304
6	Tank
7	Measuring wire
8	Guide wire, SUS316
9	Displacer
10	Anchor hook plate, SUS304

No.	Description
11	Welding point
12	Ring, SUS316
13	Flange

Guide wire installation procedure

1. Install NMS5 [1] on the reducer plate.
2. Perform calibration steps before the displacer [3] is attached to the guide wires.
   - Make sure that the displacer does not touch the guide wires during calibration. This could be done by mounting the NMS5 to the reducer plate [2] prior to fitting the guide wires [4].

Perform calibration steps so that displacer does not touch the guide wires if the guide wires are already installed to the reducer plate.

3. Secure the guide wires to the hooks of the springs [5].
4. Secure the springs to the reducer plate.
5. Put the guide wires through the displacer guide ring [6] and set the displacer.

This completes the guide wire installation procedure.

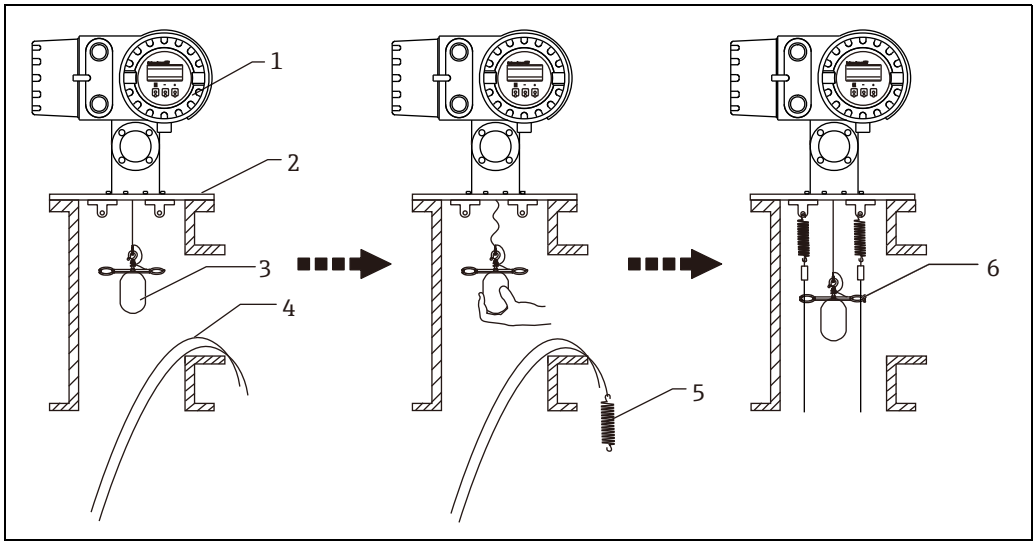

Figure 22: Guide wire installation

1 NMS5
2 Reducer plate
3 Displacer
4 Guide wires
5 Springs
6 Displacer guide ring

5.6 Alignment of NMS5

5.6.1 Flange

Confirm that the size of the nozzle and the flange is matched prior to mounting NMS5 on the tank. The flange size and the rating of NMS5 vary depending on the customer's specifications.

- Check the flange size of NMS5.
- Mount the flange on the top of the tank. The deviation of the flange from the horizontal plane should not exceed +/- 1 degree.
- When mounting NMS5 on a long nozzle, make sure that the displacer does not touch the inner wall of the nozzle.

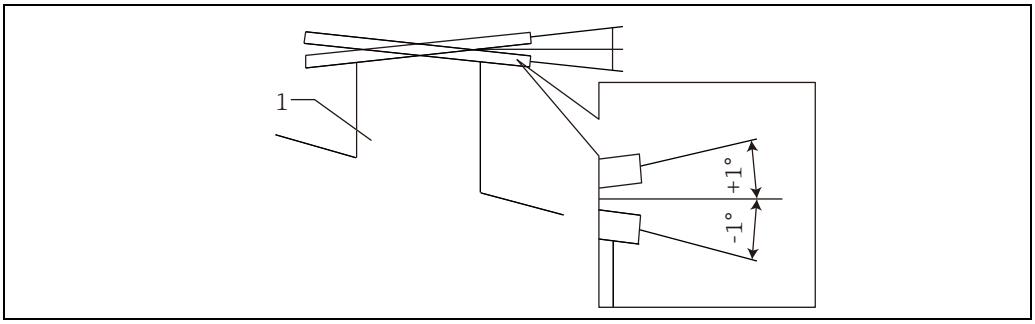

Figure 23: Allowable inclination of mounting flange

1 Nozzle

When NMS5 is installed without a guide system, follow the recommendations below:

- Confirm the mounting nozzle is in the sector between 45 and 90 degrees (or -45 and -90 degrees) away from the inlet pipe of the tank. This prevents heavy swinging of the displacer caused by waves or turbulence from the inlet liquid.
- Confirm the mounting nozzle is 500 mm (19.69 in) or more away from the tank wall.
- Confirm the minimum measuring level is at 500 mm (19.69 in) or more above the top of the inlet pipe by setting the low stop. This protects the displacer from direct flow of the inlet liquid.
- If a stilling well cannot be mounted in the tank due to the shape or condition of the tank, attaching a guide system is recommended. Consult E+H services for further information.

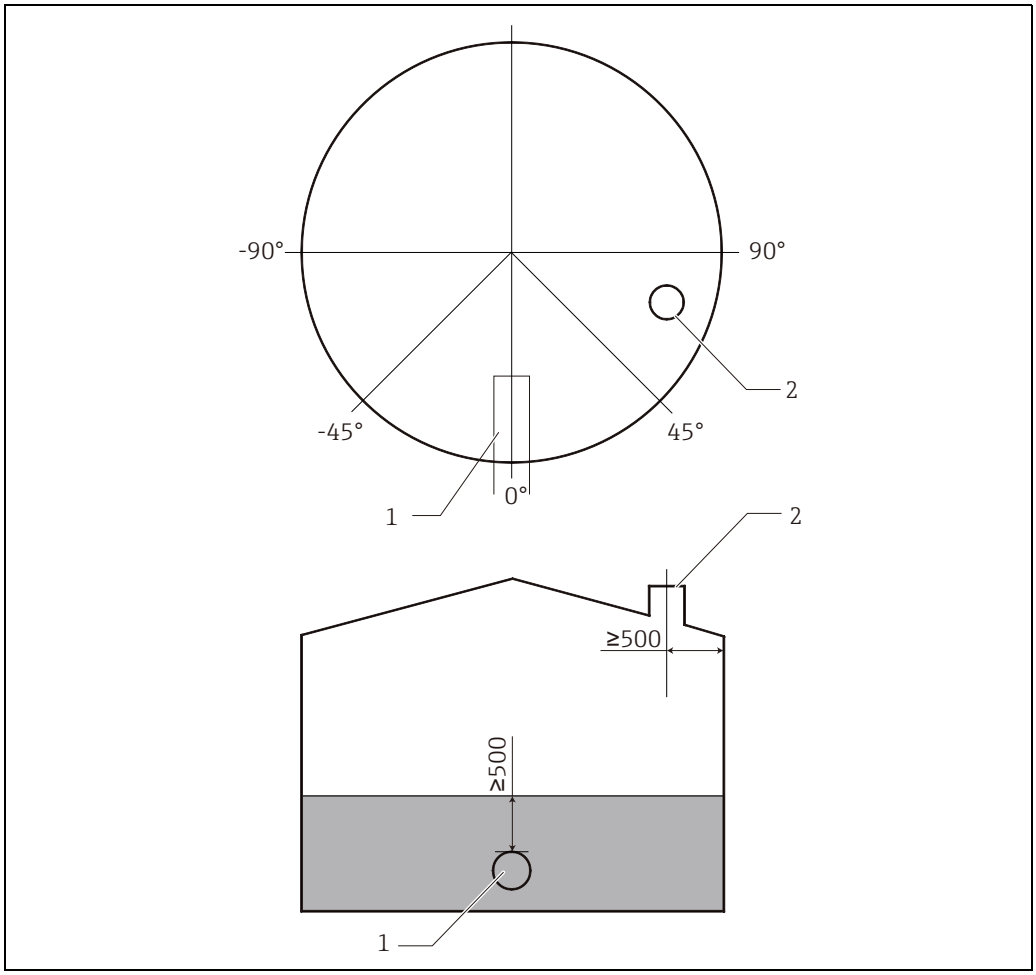

Figure 24: Recommended position for mounting NMS5 and minimum measuring level

1 Inlet pipe
2 Tank nozzle

- Before pouring liquid into the tank, confirm that liquid flowing through the inlet of the pipe will not contact the displacer directly.
- When discharging liquid out of the tank, ensure that the displacer will not get caught in the liquid current and sucked into the outlet pipe.

5.7 Electrostatic charge

When liquid measured by NMS5 has a conductivity of 1 uS/m or less, it is quasinonconductive. In this case, using a stilling well or guide wire is recommended. This releases the electrostatic charge on the liquid surface.

5.8 Mounting of the device

The NMS5 is delivered in two different packing styles depending on the mounting method of the displacer.

- For the all-in-one method, the displacer is mounted on the measuring wire of NMS5.
- For the displacer shipped separately method, it is necessary to install the displacer on the measuring wire inside NMS5.

5.8.1 Available installations

The following installation procedures are available for NMS5.

- Mounting without guide system
- Mounting with stilling well
- Mounting with guide wire

Mounting option	Without guide system (Free-space mounting)	With stilling well	With guide wire
Type of tanks	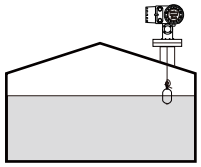	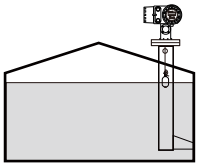	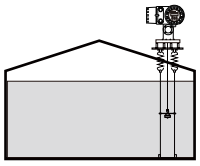
Type of installations	▪ All-in one ▪ Displacer shipped separately ▪ Displacer installation through calibration window	▪ All-in one ▪ Displacer shipped separately ▪ Displacer installation through calibration window	Displacer shipped separately

NMS5 is shipped as an all-in-one package when selected order codes meet all the following conditions:

- Feature 070: C or L
- Feature 090: A, C, E, G, J, L, N, Q or S
- Feature 110: D
- Feature 120: 0, 1, 2, 3, 6 or 8
- Feature 130: A, C, D, G, H, J, L, M, T or U

5.8.2 Installation for all-in-one method

As NMS5 is protected by some packaging materials, remove them as follows prior to mounting NMS5.

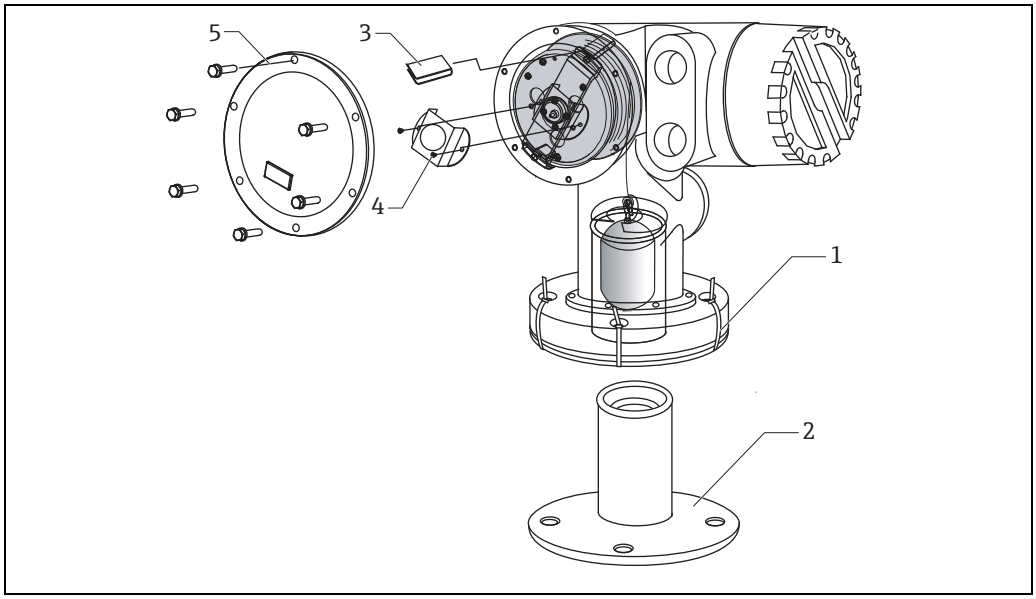

Figure 25: All-in-one method

1 Fixing band
2 Displacer holder
3 Tape
4 Wire drum stopper
5 Drum housing cover

Step	Procedure	Note
1	1. Hold the gauge so that it stays horizontal against the flange. 2. Cut the fixing bands [1]. 3. Remove the displacer holder [2].	▪ Perform these steps before mounting NMS5 on the nozzle. ▪ Do not tilt NMS5 after removing the displacer holder.
2	4. Mount NMS5 on the nozzle.	▪ Make sure that the measuring wire hangs vertically. ▪ Confirm that there are no kinks or other defects in the measuring wire.
3	5. Remove screws and M6 bolts (M10 bolts for stainless steel housing) to remove the drum housing cover [5]. 6. Loosen two screws and remove the wire drum stopper [4].	▪ Be sure not to lose O-ring and fixed bolts for the cover for the drum housing.
4	7. Remove the tape [3] from the wire drum carefully.	▪ Remove the tape by hand to avoid damaging the wire drum. ▪ Make sure that the measuring wire is wound so that it fits correctly in the grooves.
5	8. Mount the drum housing cover [5].	▪ Confirm that O-ring is in groove.
6	9. Turn on the main power and confirm that NMS5 shows "STOP" and that level shows "16050 ~16060mm". 10. Set "LEVEL" command, then set "STOP" where the displacer stops 16000mm or less near the 15950 mm level. 11. Set "UP" command and the displacer will automatically stop at 16000mm. 12. Set "STOP" command.	Sensor, reference, and drum calibration steps are not required because they are all performed prior to delivery.

5.8.3 Displacer shipped separately

It is necessary to install the displacer on the measuring wire inside NMS5.

Figure	Procedure
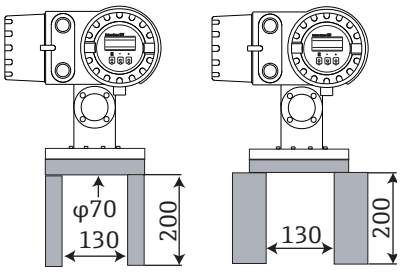 Figure 26: Displacer installation 1	1. Put NMS5 on the blocks or a pedestal. 2. Confirm that there is enough space under NMS5. Be careful not to drop NMS5.
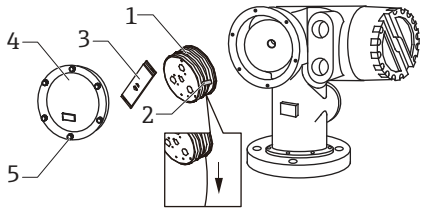 Figure 27: Displacer installation 2	3. Remove screws and M6 bolts [5] (M10 bolts for stainless steel housing). 4. Remove the wire drum cover [3] and the bracket [2]. 5. Remove the wire drum [1] from the drum housing. 6. Remove the tape [4] on the wire drum. 7. Unwind the measuring wire approximately 250 mm (9.84 in) so that the wire ring is positioned under the flange. 8. Mount the wire drum on NMS5. 9. Mount the bracket. ▪ Handle the measuring wire with care. It may kink. ▪ Be sure that the wire is wound correctly in the grooves.
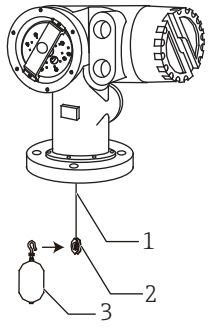 Figure 28: Displacer installation 3	10. Hook the displacer [3] on the ring [2]. ▪ Be sure that the wire is wound correctly in the grooves. ▪ If not, remove the displacer and the wire drum, and repeat step 7.
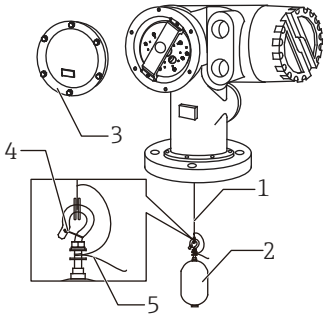 Figure 29: Displacer installation 4	11. Turn on the power of NMS5. 12. Perform sensor calibration 13. Secure the displacer [2] to the measuring wire [1] using the securing wire [4]. 14. Install the ground wire [3] of the displacer (for details, refer to "5.2.7 Displacer ground wire installation". 15. Perform reference calibration. 16. Turn off the power. 17. Mount the wire drum cover [5]. For calibration, refer to "12 Adjustment".

Figure	Procedure
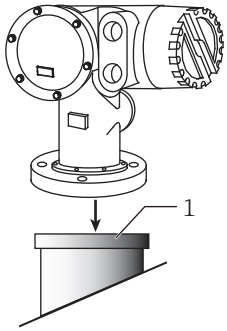 Figure 30: Displacer installation 5	18. Mount NMS5 on the tank nozzle [1]. 19. Confirm that the displacer does not touch the inner wall of the nozzle. 20. Turn on the power. 21. Perform drum calibration. For calibration, refer to "12 Adjustment".

5.8.4 Installation through the calibration window

In the case of a 50 mm (1.97 in) diameter displacer, the displacer can be installed through the calibration window.

It is only possible to install the following displacers through the calibration window: 50 mm SUS, 50 mm alloy C, 50 mm PTFE, Except 0.15mm, SUS measuring wire

Figure	Procedure
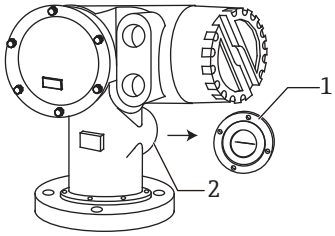 Figure 31: Displacer installation 1	1. Remove the calibration window cover [1].
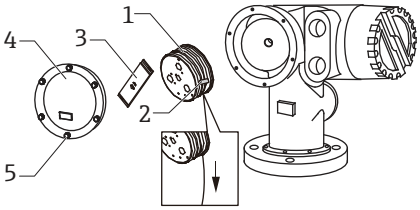 Figure 32: Displacer installation 2	2. Remove M6 bolts [5]. 3. Remove the cover [4] and the bracket [3]. 4. Remove the wire drum [1] from the drum housing. 5. Remove the tape [2] that is securing the wire. Handling the measuring wire with care. It may kink.
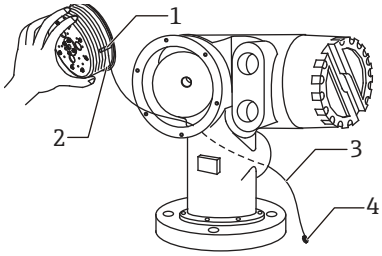 Figure 33: Displacer installation 3	6. Holding the wire drum [1] with one hand, unwind the measuring wire [3] approximately 500 mm (19.69 in). 7. Secure the wire [3] temporarily with the tape [2]. 8. Insert the wire ring [4] into the drum housing. 9. Pull the wire ring out through the calibration window. Handle the measuring wire with care.
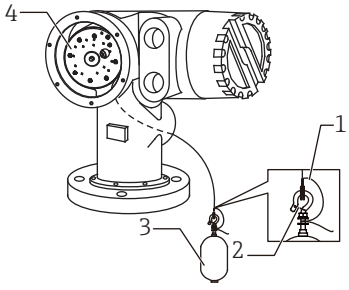 Figure 34: Displacer installation 4	10. Insert the wire drum [4] temporarily into the drum housing. 11. Hook the displacer [3] on the wire ring. 12. Secure the displacer to the measuring wire using the securing wire [2]. 13. Install the ground wire [1] for the displacer (for details, refer to "5.2.7 Displacer ground wire installation". Handle the measuring wire with care. It may kink.

Figure	Procedure
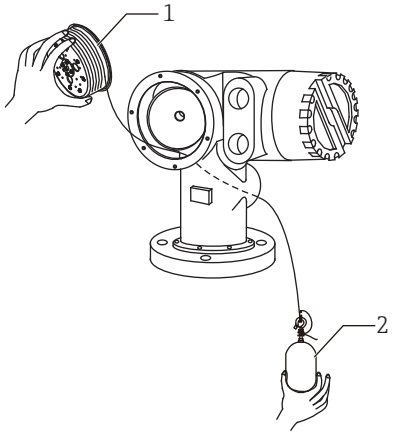 Figure 35: Displacer installation 5	14. Hold the wire drum [1] up and place the displacer [2] into the calibration window. 15. Remove the wire drum from the drum housing and unwind the measuring wire approximately 500 mm (19.69 in). 16. Hold the wire drum up and place the displacer into the calibration window. 17. Hold the displacer at the center of the calibration window. 18. Hold the other hand (wire drum) up to add tension to the measuring wire in order not to drop the displacer rapidly.
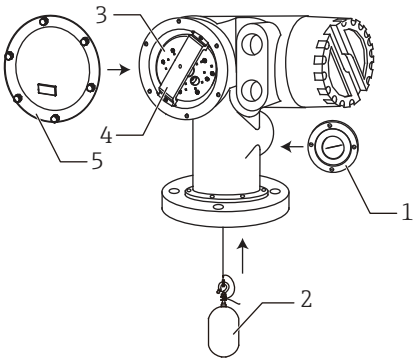 Figure 36: Displacer installation 6	19. Let go of the displacer [2]. 20. Remove the tape from the wire drum [5]. 21. Insert the wire drum into the drum housing. 22. Mount the bracket [4]. Be sure that the wire is wound correctly in the grooves. 23. Turn on the power of NMS5 and move the displacer up until the wire ring can be seen in the calibration window. ▪ Confirm that there are no kinks or other defects in the measuring wire. ▪ Confirm that the displacer does not touch the inner wall of the nozzle. 24. Perform sensor calibration. 25. Perform reference calibration. 26. Mount the drum housing cover [3] and the calibration window cover [1]. 27. Perform drum calibration. For calibration, refer to "12 Adjustment".

5.8.5 Displacer ground wire installation

Depending on the application and Ex requirements, electrical grounding of the displacer is required. There are different procedures depending on the displacer type, which are described below.

Standard displacer installation

1. Mount the displacer [3] on the wire ring [1].
2. Wind the securing wire [4] on the wire hook.
3. Wind the ground wire [2] between the washers [5] twice.
   - If grounding is not required for non-explosion-proof applications, skip this step.
4. Secure the nut [6] with a wrench [7].

This completes the displacer installation procedure.

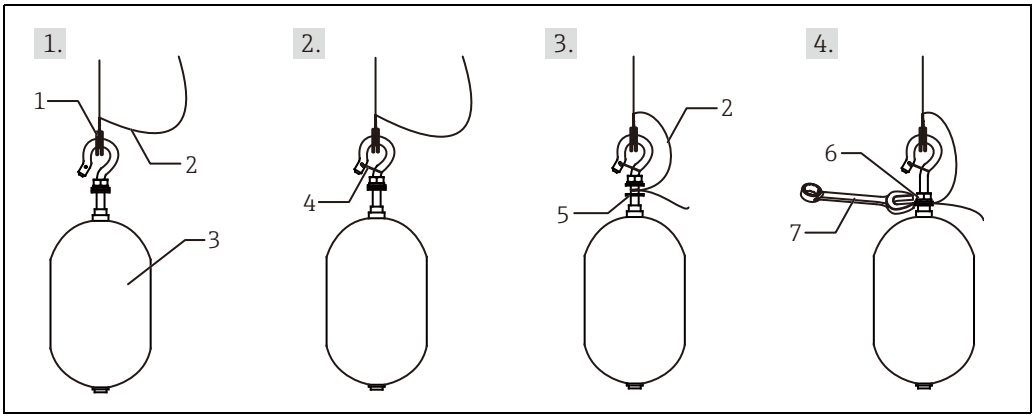

Figure 37: Displacer installation

1 Wire ring
2 Ground wire
3 Displacer
4 Securing wire
5 Washer
6 Nut
7 Wrench

PTFE displacer installation

1. Remove the screw [1] using a flathead screwdriver.
2. Mount the displacer [4] on the PFA covered ring [2].
3. Remove the PFA cover approximately 10 mm (0.39 in) for conductivity.
4. PTFE Wire: Install the ground wire [6] onto the displacer from the wire insertion slot [3] until the ground wire touches to the wall of the screw hole [5].
5. SUS Wire: Install the ground wire [6] onto the displacer from the wire insertion slot [3] until the ground wire touches to the wall of the screw hole [5]. Then install the ground wire 10mm farther.
6. Tighten the screw [1].
   - Hold the ground wire with finger tips so that the wire does not come out from the slot.
7. Lift the displacer using a screwdriver and confirm that the ground wire does not come out from the slot.

This completes the PTFE displacer installation.

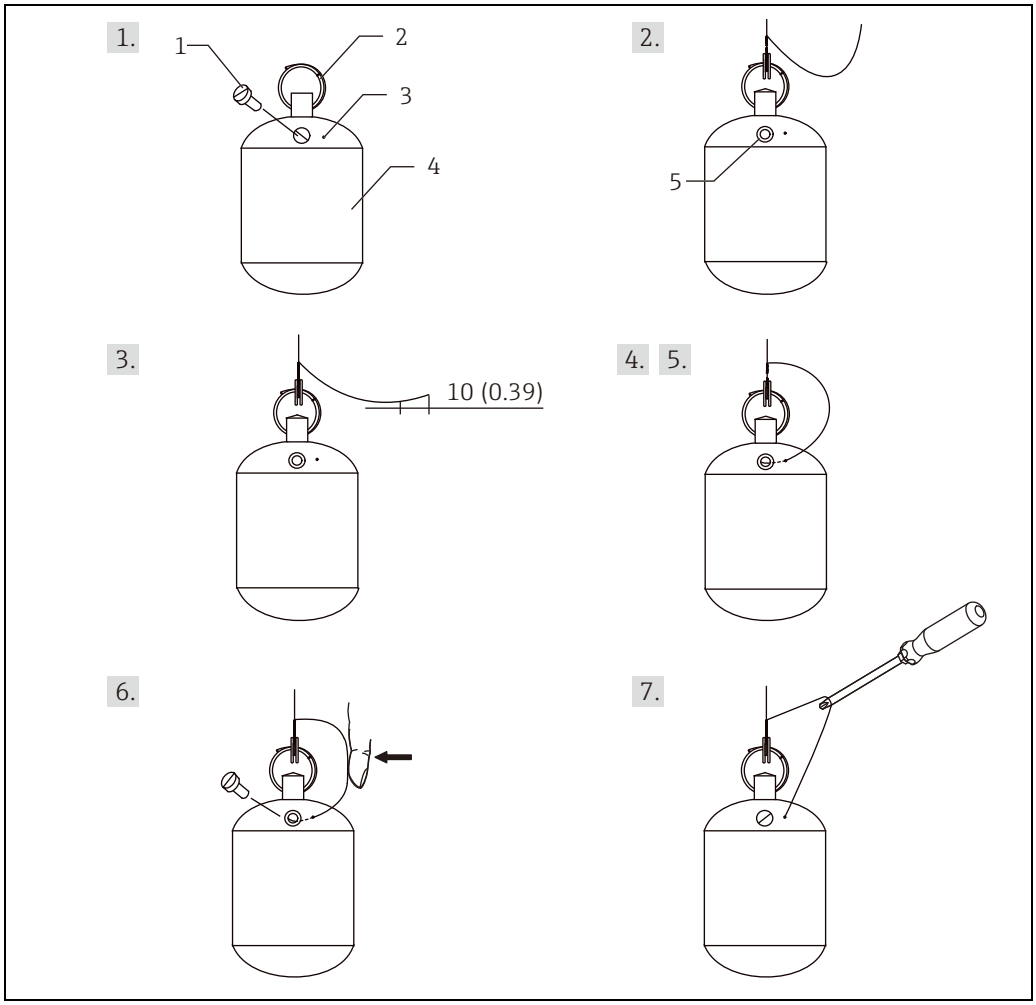

Figure 38: PTFE displacer installation; dimensions mm (in)

1 *PFA covered ring*
2 *Wire insertion slot*
3 *Displacer*
4 *Screw hole*
5 *Ground wire*

6 Wiring

6.1 Wiring connection

The electrical connections of NMS5 are shown in "6.2 Terminal Assignment".

⚠ CAUTION

The power supply cable should have the following specifications:

- PVC, PE, or equivalently isolated
- 600 V insulation voltage or equivalent.
- Temperature rating 80 or high

The size of the core is defined by the core resistance, voltage drop, and required consumption. The maximum power consumption of NMS5 is 50 VA/50W.

⚠ WARNING

- Connect the ground terminal to the ground line inside or outside the terminal box.
- Use a wire 4mm^2 or more for ground.
- Use cables and wires of sufficient and appropriate size and length to make a solid connection at each terminal required.

⚠ DANGER

- Do not stretch cables. This may lead to failure, loss of function, and/or damage to the device and facility.
- Cut the trim cables for appropriate length. Do not leave the extra cables and wires in the electrical compartment. This may lead to failure, loss of function, and /or damage to the device and facility.

6.2 Terminal assignment

6.2.1 V1 Serial Signal, Modbus RS485, HART, Enraf BPM

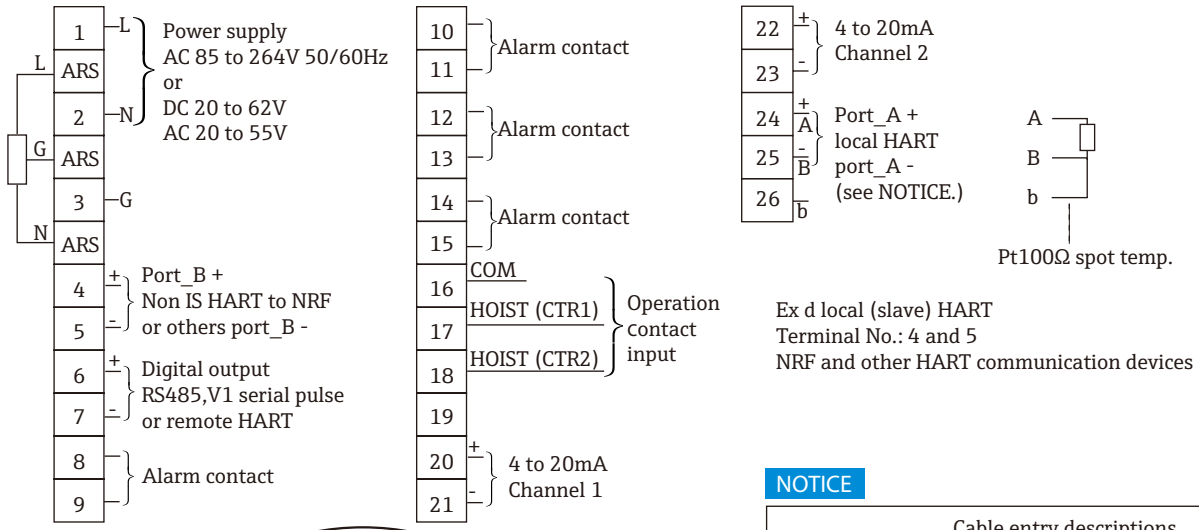

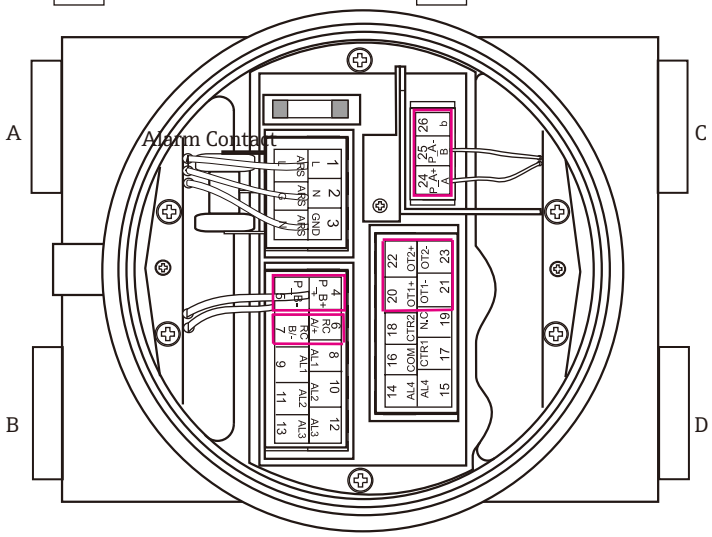

NOTICE

Cable entry descriptions	
A	Power supply
B	Ex d local (slave) HART Terminals: 4 &5 Digital output: Terminals 6 & 7 V1 Serial Pulse, Modbus (RS485) HART, Enraf BPM
C	Ex ia local (slave) HART, or Pt100 3 wire spot RTD (see NOTICE.) terminals: 24 & 25
D	4 to 20mA output: Terminals 20 & 21, 22 & 23 ⚠ CAUTION Terminals 22 & 23 will be used as “Status 1 Input” when signal input from field unit (Order code position 60) is: Order information: 060 4: HART and Status 1 input 5: HART, Pt100 Spot and Status 1 input 6: HART, Pt100 Spot temp., Operation contact, and Status 1 input

NOTICE

- Terminal connection for Whessoe Matic 550 (WM550) and Mark Space, refer to the next few pages.
- Terminals 4 & 5 and 24 & 25 for HART devices are inter - connected on Explosion proof (Ex d) certified version.
- Terminals 24 & 25 (and 24, 25 & 26 for spot temp.) will be intrinsically safe (i.s.) device connection only when intrinsically safe certified version is selected.

Figure 39: Wiring sample 1

6.2.2 Whessoe Matic 550

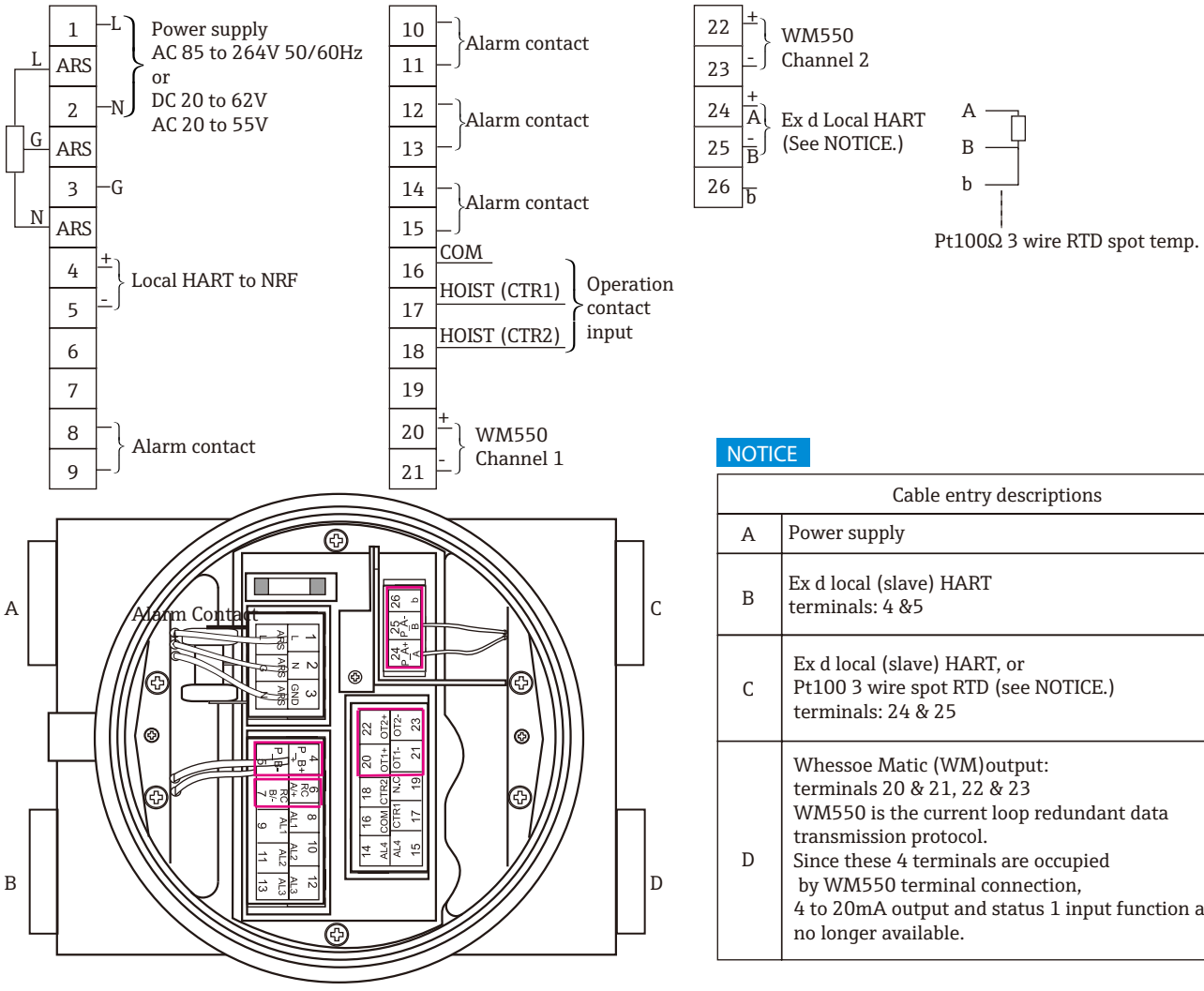

NOTICE	
Cable entry descriptions	
A	Power supply
B	Ex d local (slave) HART terminals: 4 &5
C	Ex d local (slave) HART, or Pt100 3 wire spot RTD (see NOTICE.) terminals: 24 & 25
D	Whessoe Matic (WM)output: terminals 20 & 21, 22 & 23 WM550 is the current loop redundant data transmission protocol. Since these 4 terminals are occupied by WM550 terminal connection, 4 to 20mA output and status 1 input function are no longer available.

Normally the combination of WM550 and analog 4 to 20mA is prohibited.
Contact Endress+Hauser representatives if needed.

NOTICE

- Terminals 4 & 5 and 24 & 25 for HART devices are inter - connected on Explosion proof (Ex d) certified version.
- Terminals 24 & 25 (and 24, 25 & 26 for spot temp.) will be intrinsically safe (i.s.) device connection only when intrinsically safe certified version is selected.

Figure 40: Wiring sample 2

6.2.3 Mark/Space

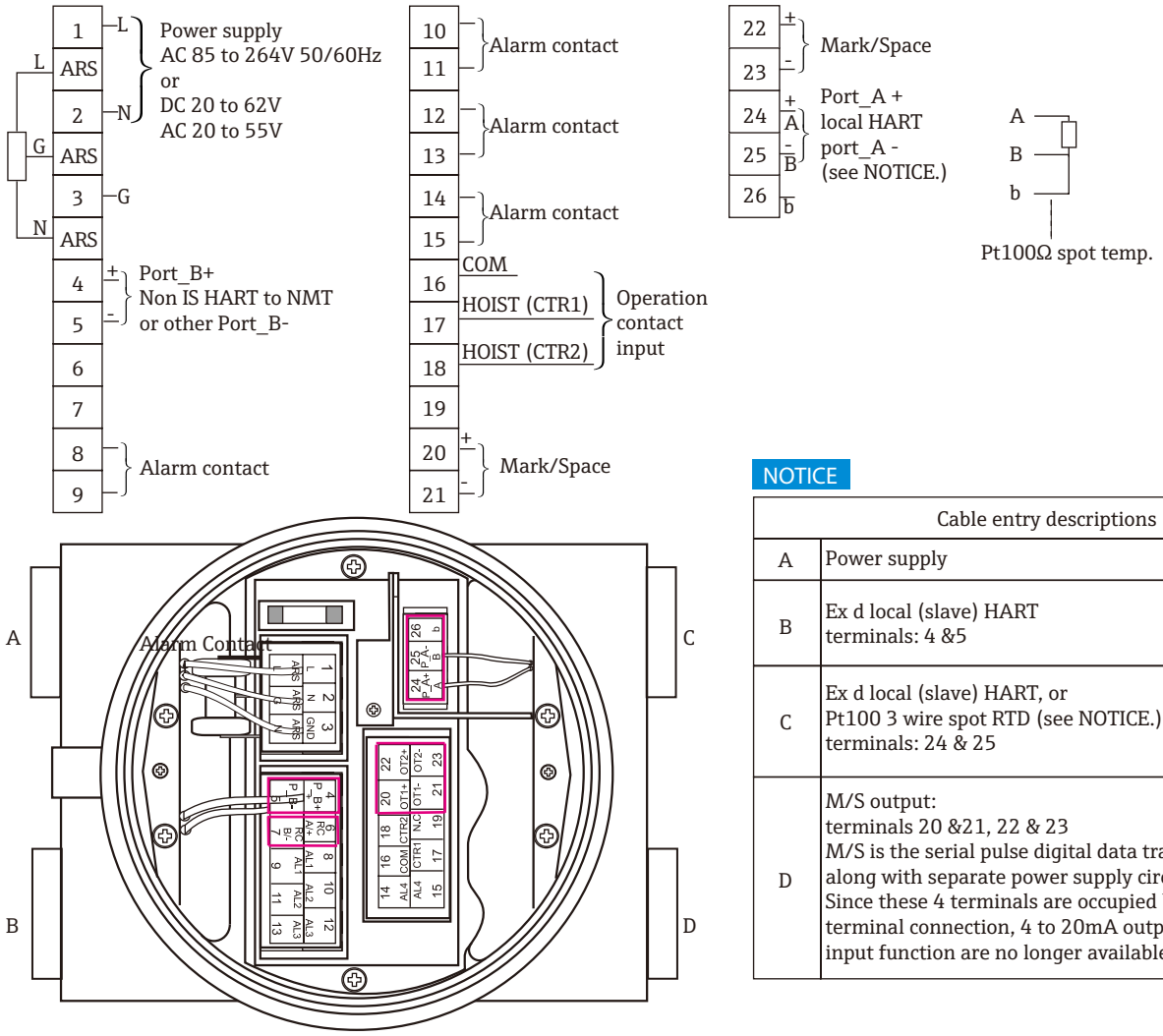

NOTICE	
Cable entry descriptions	
A	Power supply
B	Ex d local (slave) HART terminals: 4 &5
C	Ex d local (slave) HART, or Pt100 3 wire spot RTD (see NOTICE.) terminals: 24 & 25
D	M/S output: terminals 20 &21, 22 & 23 M/S is the serial pulse digital data transmission along with separate power supply circuit. Since these 4 terminals are occupied by M/S terminal connection, 4 to 20mA output and status 1 input function are no longer available.

Normally the combination of M/S and analog 4 to 20mA is prohibited.
Contact Endress+Hauser representatives if needed.

NOTICE

- Terminals 4 & 5 and 24 & 25 for HART devices are inter - connected on Explosion proof (Ex d) certified version.
- Terminals 24 & 25 (and 24, 25 & 26 for spot temp.) will be intrinsically safe (i.s.) device connection only when intrinsically safe certified version is selected.

Figure 41: Wiring sample 3

Using the external operation switch, ensure that the settings of the system are the same as shown in the following logic setting table. This will allow user to input operation signals.

(Hoist-CTR1)(Stop-CTR2)

CTR 1	CTR 2	OPERATION
OFF	OFF	LEVEL
ON	OFF	HOIST
OFF	ON	STOP
ON	ON	INTERFACE

6.2.4 Input and output

Input signal

- Contact Switch
- HART
- Pt 100

Output signal

- V1
- WM550
- M/S
- ENRAF BPM
- MODBUS
- HART
- ANALOG 4-20mA
- Overspill Prevention (OSP)

DANGER

- The cable used for input and/or output must be 24 AWG or more and must be screened or steel armored. A twisted pair is required for HART and/or RS 485 signal.
- Two or three cores for mains, two cores for digital output and two cores for HART input are normally used for the cabling of NMS5. The instrument has max. four cable entries.
- Check the cable size and the number of cables prior to ordering NMS5.

6.2.5 Cable gland

When there are extra cable entries not be used, mount threaded plugs for waterproof.
Refer to "Safety Instruction XA00578G-A".

WARNING

When ordering TIIS Ex d specification, cable glands are attached with NMS5. Ensure to use the cable glands.

6.3 Temperature input system

There are two types of temperature input method and two types of Ex protection system as Ex d or Ex [ia] in NMS5.

6.3.1 Ex d NMT input + HART input

Ex d HART sensor and NMT53x Ex d are connected in this system.

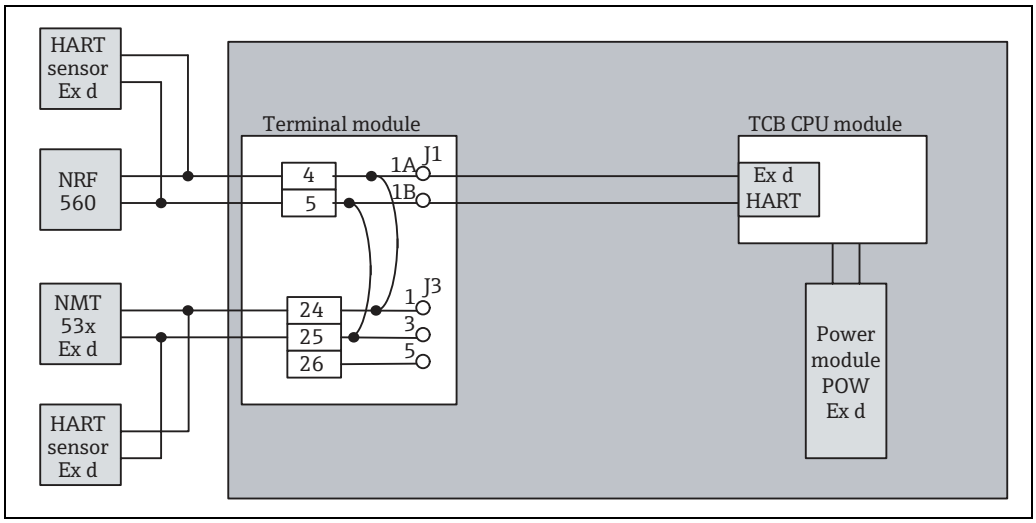

Figure 42: Ex d NMT input and HART input

6.3.2 Ex d Pt100 Spot Temperature Input +HART Input

Ex d HART sensor and Ex d Pt100 sensor are connected in this system.

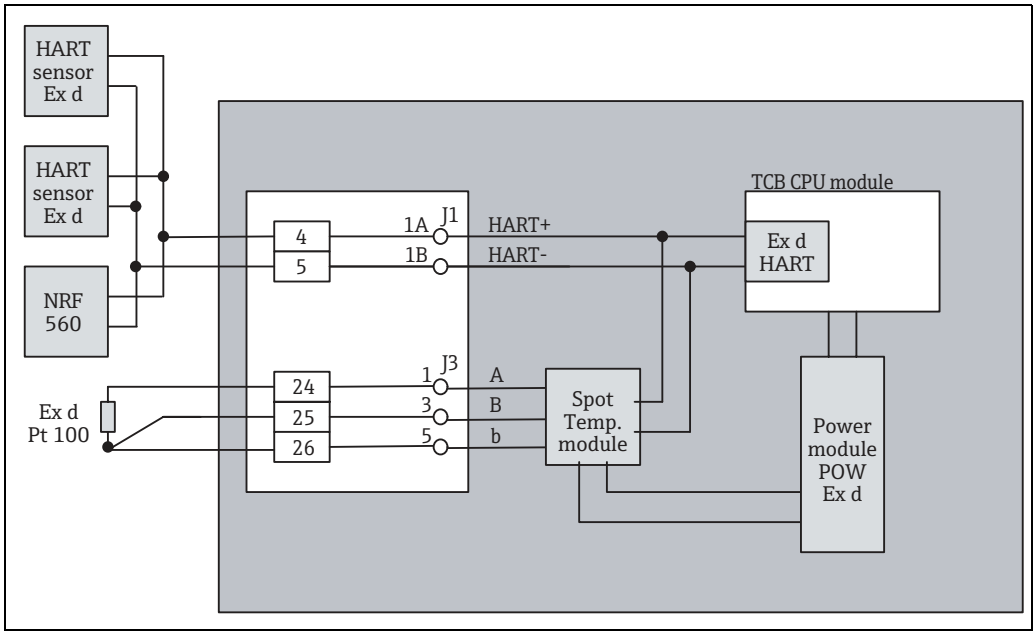

Figure 43: Ex d Pt100 spot temperature input and HART input

6.3.3 Ex ia NMT input + HART input

Ex d HART sensor and NMT53x Ex ia are connected in this system, excluding TIIS specification.

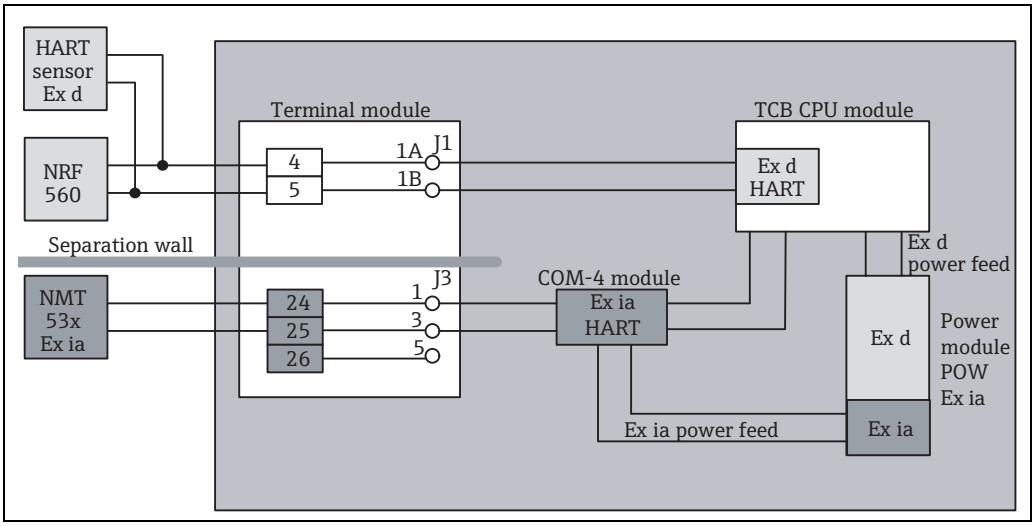

Figure 44: Ex ia NMT input and HART input

6.3.4 Ex ia Pt100 Spot Temperature Input + HART Input

Ex d HART sensor and Ex ia Pt100 sensor are connected in this system, excluding TIIS specification.

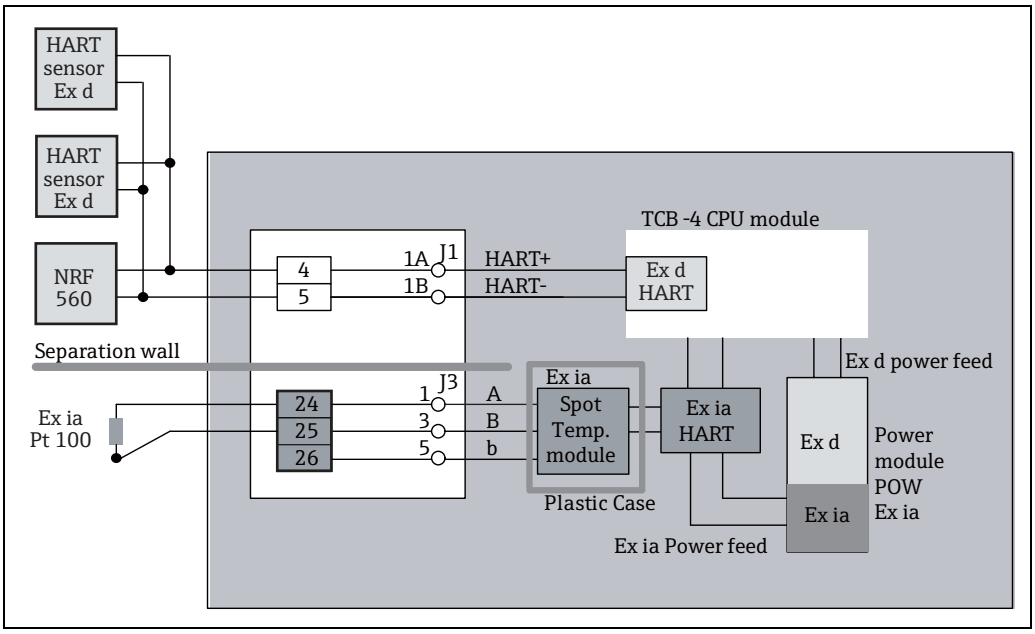

Figure 45: Ex ia Pt100 spot temperature input and HART input

7 Operation

7.1 Touch control and programming matrix

7.1.1 Display and operating elements

Display
During normal operation, NMS5 has an illuminated LCD that shows the level, the temperature, and the status of the device at "HOME" position.
For the display of the other data and the programming of the parameters for operation, NMS5 uses a convenient programming matrix.

Operating elements
NMS5 is operated by three visual operating elements, namely the keys "E", "+", and "-" . They are actuated when the appropriate field on the protective glass of the front is touched with the finger ("touch control"). The corresponding transmitting and receiving diodes are not affected by external influences, e.g. direct sunlight. The software and hardware installed in NMS5 rule out any malfunction that may be caused in this way. Even in explosive hazardous areas, the explosion-proof housing of the touch control ensures a safe access to the data.

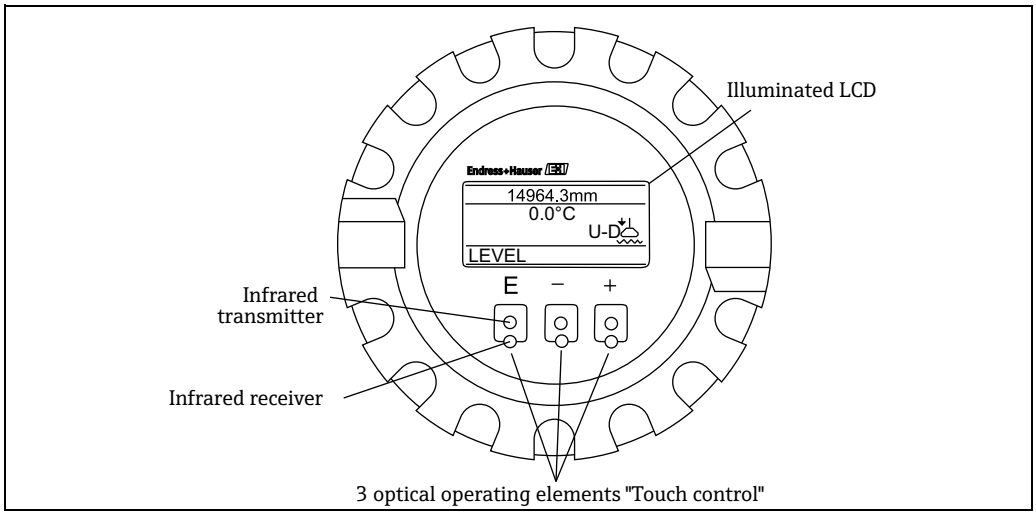

Figure 46: Display

7.1.2 Functions of operating elements

The programming matrix consists of matrix groups, namely one "static" matrix and additional "dynamic" matrices. They are described in detail in Section "14 Matrix". The individual matrix groups, function groups, and functions within the programming matrix can be selected by alternately touching the operating elements.

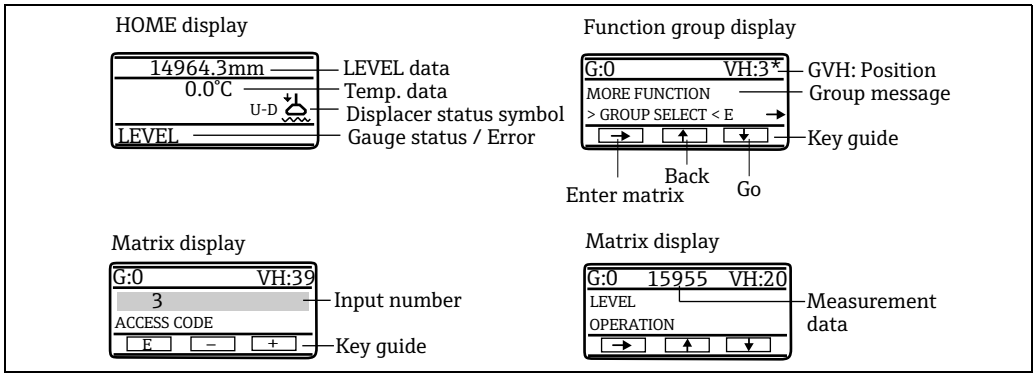

Figure 47: Displays

		0	1	2	3	4	5	6	7	8	9
Measured Value 1	0										
Measured Value 2	1										
Operation	2										
More Function	3	Calibration									
Level Data	4										
Calibration	5										
Adjustment	6										
Auto Wire Calib.	7										
Auto Calib. Displ.	8										
Display	9										

		0	1	2	3	4	5	6	7	8	9
Measured Value 1	0										
Measured Value 2	1										
Operation	2										
More Function	3	Device Data									
Contact Output	4										
Analog Out	5										
Parts Data	6										
Input Signal	7										
Communication	8										
Status	9										

		0	1	2	3	4	5	6	7	8	9
Measured Value 1	0										
Measured Value 2	1										
Operation	2										
More Function	3	Service									
Meas. Wire & Drum	4										
Gauge data	5										
System Data	6										
Service	7										
Sensor Value	8										
Sensor Data	9										

		0	1	2	3	4	5	6	7	8	9
Measured Value 1	0										
Measured Value 2	1										
Operation	2										
More Function	3	Temperature									
Temperature Data	4										
Element Temp.	5										
Element Position	6										
NMT Adjustment	7										
Set Data NMT	8										
Device Data	9										

		0	1	2	3	4	5	6	7	8	9
Measured Value 1	0										
Measured Value 2	1										
Operation	2										
More Function	3	HART Dev (1)									
Measured Value	4										
P.V. Setting	5										
Sensor Specific	6										
Alarm	7										
Self Diagnostic	8										
Device Data	9										

		0	1	2	3	4	5	6	7	8	9
Measured Value 1	0										
Measured Value 2	1										
Operation	2										
More Function	3	HART Dev (2)									
Measured Value	4										
P.V. Setting	5										
Sensor Specific	6										
Alarm	7										
Self Diagnostic	8										
Device Data	9										

		0	1	2	3	4	5	6	7	8	9
Measured Value 1	0										
Measured Value 2	1										
Operation	2										
More Function	3	Adjust Sensor									
Adjust Sensor	4										
HART Error Rate	5										
Unit	6										
HART Line	7										
Interface Adjust	8										
	9										

		0	1	2	3	4	5	6	7	8	9
Measured Value 1	0										
Measured Value 2	1										
Operation	2										
More Function	3	Tank Profile									
Profile Operation	4										
Status/Data	5										
Density 1-10	6										
Density 11-16	7										
Position 1-10	8										
Position 11-16	9										

		0	1	2	3	4	5	6	7	8	9
Measured Value 1	0										
Measured Value 2	1										
Operation	2										
More Function	3	Interface Profile									
	4										
Status/Data	5										
Density 1-10	6										
Density 11-16	7										
Position 1-10	8										
Position 11-16	9										

Static Matrix

Dynamic Matrix

Figure 48: Matrix construction

Key	Functions
E	▪ Access to the programming matrix (touch the key for 3 seconds or more). ▪ Return to HOME position (touch the key for 3 seconds or more). ▪ Move the status horizontally in the function group to select functions. ▪ Save parameters or access codes.
+ −	▪ Move the status vertically to select function groups. ▪ Selec or set parameters. ▪ Set access codes.

LCD returns to HOME position when no key is touched for 10 minutes or more. Digits are incremented or decremented using by + or - key. When touching + or - key continuously, then the minimum digit changes first. After one cycle of the minimum, the second minimum changes. After one cycle of the second follows the third minimum, and so on. When releasing a finger from the touch control, then the procedure starts again from the minimum digit (Analogy of mechanical counter).

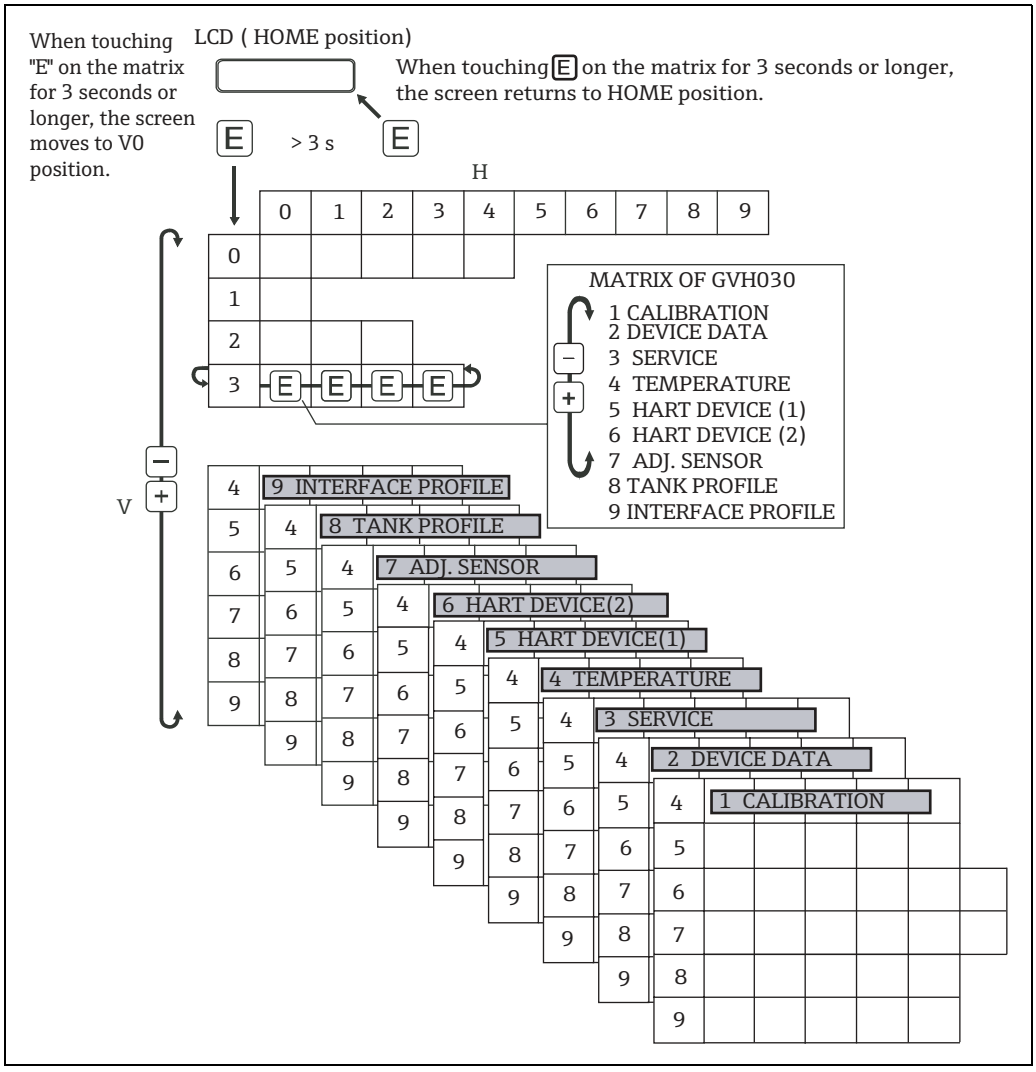

Figure 49: Selection matrix groups, function groups, and functions with programming matrix

7.2 HOME position

After turning on the power, LCD shows the current data on HOME position.

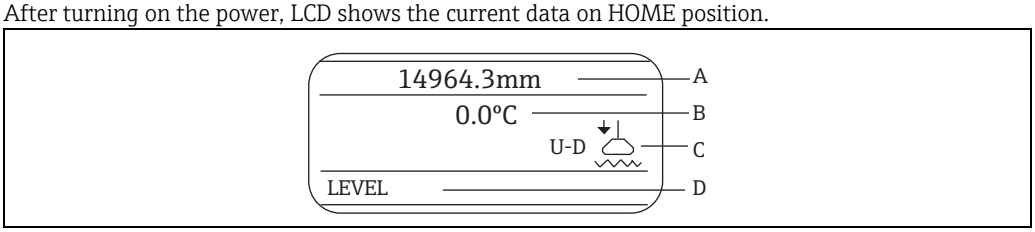

Figure 50: HOME position

The letters A, B, C and D stand for the areas where information on measured values and status of the device are displayed:

Area	Information
A	Current Level
B	Current Temperature
C	Displacer Status
D	Gauge Status

The meanings of message appearing on LCD (display) is explained in the following table.

Gauge Status	Description
G - RE	Reference position for measuring
UP	The measuring wire is hoisted.
STOP	The measuring wire stops.
LIQU	The liquid is being measured.
U - IF	The upper interface level is being measured.
LIF	The lower interface level is being measured.
BOTM	The tank bottom level is being measured.
U - DE	The upper liquid density is being measured.
M - DE	The middle liquid density is being measured.
B - DE	The bottom liquid density is being measured.
CAN	Resetting RELE.OVER TENS (over tension error).
TEAC	Calibration is being measured.
blank	Measuring is not possible.

Displacer Status	Symbol	Meaning
BAL		**Balance** The displacer is resting on the liquid surface or interface and in balanced status.
T - B		**Temporary Balance** Automatic weight calibration is being carried out.
U - U		**Unbalance Up** The displacer is being hoisted and in unbalanced status.
U - D		**Unbalance Down** The displacer is being lowered and in unbalanced status.
R - U		**Balance Up** The displacer is being hoisted and in correction of balance.
R - D		**Balance down** The displacer is being lowered and in correction of balance.
LOW		The displacer is resting at the lower stop.

If no LCD operation, NMS5 will turn off the backlight of LCD 12 hour later. Touching LCD again after this time will turn on the backlight.

7.3 Access code

The access code is to ensure the confidentiality of the setup data. Three security levels are available along with access codes.

Security Level		Access Code
0		None
1	For Operator	50
2	For Engineer	51/530/777

The higher levels include the lower ones. e.g. If access code 50 is specified for a function, then code 51 also enables editing. A function that requires access code 51, on the contrary, cannot be edited by code 50. However, 777 is only used to change I.S. terminal configuration.

Setting Access Code

Item	Procedure	Remarks
Static Matrix 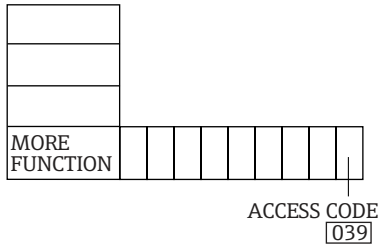 Figure 51: Access Code	1. At the static matrix "MORE FUNCTION", select GVH039 "ACCESS CODE" 2. The default value is "0". Touch the "+" key. 3. The first digit increases to 9, then the second digit increases. Stop touching "+" once you reach "50". 4. "50" is blinking. Gently touch "+" key again to change the first digit from 0 to 1. Now you have "51". 5. Here touch "E"; "EDITING ENABLE" will be displayed.	▪ When touching "E" while displaying an access code except 0, 50, or 51 "EDITING LOCKED" will appear. ▪ If an access code has not been selected before performing any settings, the screen will automatically change to show "ACCESS CODE" ▪ Operation Commands can be sent, and displayed data read, by remote systems, depending on your NMS5 specification.

7.4 Operation command and new operation status

7.4.1 Operation commands

Operation Commands can be sent the NMS5 from a host system. The following table explain the command codes.

Code	Command	Remarks
0	LEVEL	
1	UP	
2	STOP	After weight calibration, STOP is set as a default operation command.
3	BOTTOM LEVEL	
4	UPPER INTERF. LEVEL	
5	MIDD.INTERF.LEVEL	
6	UPPER DENSITY	
7	MIDDLE DENSITY	
8	DENSITY BOTTOM	
9	REPEATABILITY	
10	WATER DIP	

7.4.2 New operation status

The following table shows the new operation status, which is available when "NEW NMS STATUS", matrix position GVH272, is selected to "ENABLED".

Code	Meaning	NMS Display
0	No definition	-
1	Displacer at reference position	REFERENCE
2	Displacer hoisting up	UP
3	Displacer going down	DOWN
4	Displacer stop	STOP
5	Level measurement, balanced	LEVEL
6	Upper I/F level, balanced	UPPER INTERF. LEV.
7	Middle I/F level, balanced	MIDD. INTERF. LEV.
8	Bottom meas. Balanced	BOTTOM LEVEL
9	Upper density finished	UPPER DENSITY
10	Middle density finished	MIDDLE DENSITY
11	Bottom density finished	DENSITY BOTTOM
12	Release over tension	RELE. OVER TENS.
13	Calibration activated	CAL. ACTIVE
14	Seeking level	LEVEL SEEKING
15	Following level	LEVEL FOLLOWING
16	Seeking upper density	UPP.DEN.SEEKING
17	Seeking middle density	MID.DEN.SEEKING
18	Seeking bottom density	BOT. DEN. SEEKING
19	Seeking upper I/F level	UPP. INT. SEEKING
20	Following upper I/F level	UPP. INT. FOLLOWING
21	Seeking middle I/F level	MID.INT.SEEKING
22	Following middle I/F level	MID.INT.FOLLOWING
23	Seeking bottom level	BOTTOM SEEKING
24	Not initialized	NO INITIALIZE
25	Stopped at upper pos.	UPPER STOP
26	Stopped at lower pos.	LOWER STOP
27	Repeatability testing	REPEATABILITY
28	Seeking water level	WATER SEEKING
29	Water level, balanced	WATER LEVEL
30	Following water level	WATER FOLLOWING
31	Over-/under tension, Z-phase, ADC error	EMERGENCY ERROR
32	GVH157 SERVICE MODE = ON	MAINTENACE

7.5 Operation of displacer

The operation of the displacer for level, bottom level, interface level, and density measurement is possible by touch control.

Item	Procedure	Remarks
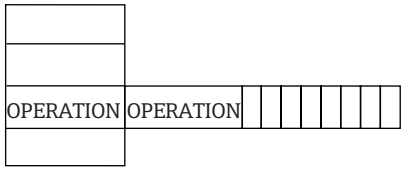 Figure 52: Static matrix 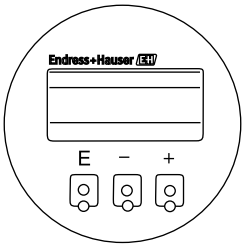 Figure 53: Touch control	1. Select function groupGVH020 OPERATION 2. Select item OPERATION. The LCD shows the command given to NMS5and the displacer position.	▪ Set access code to 50. ▪ If editing has previously been enabled by a valid access code, then the request for the code will not appear.
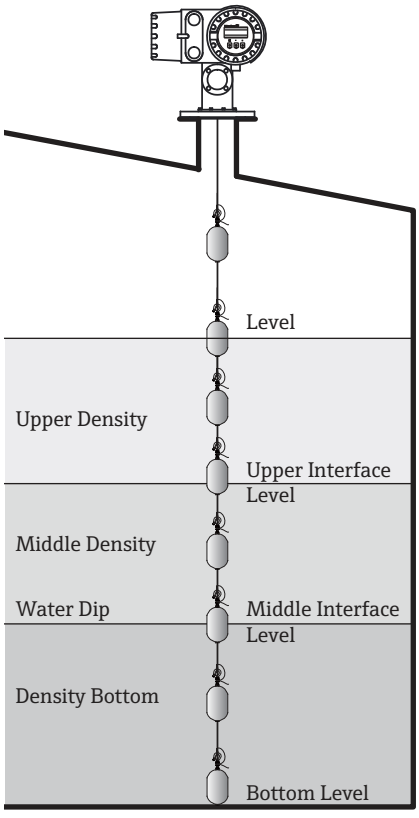 Figure 54: Operation of displacer	3. The following commands are available at this position: ▪ LEVEL ▪ UP ▪ STOP ▪ BOTTOM LEVEL ▪ UPPER INTERF. LEV* ▪ MIDD.INTERF.LEV* ▪ UPPER DENSITY* ▪ MIDDLE DENSITY* ▪ DENSITY BOTTOM* ▪ WATER DIP* ▪ REPEATABILITY TEST ▪ Interface and density measurements are not available unless specifically requested. ▪ Density profile measurement is explained in section "8.6 Density and Density Profile Measurements".	▪ The optional operation commands are available when such options are set.

7.6 Calculation of level and densities

The section specifies the formula used by NMS5 to calculate levels and densities.

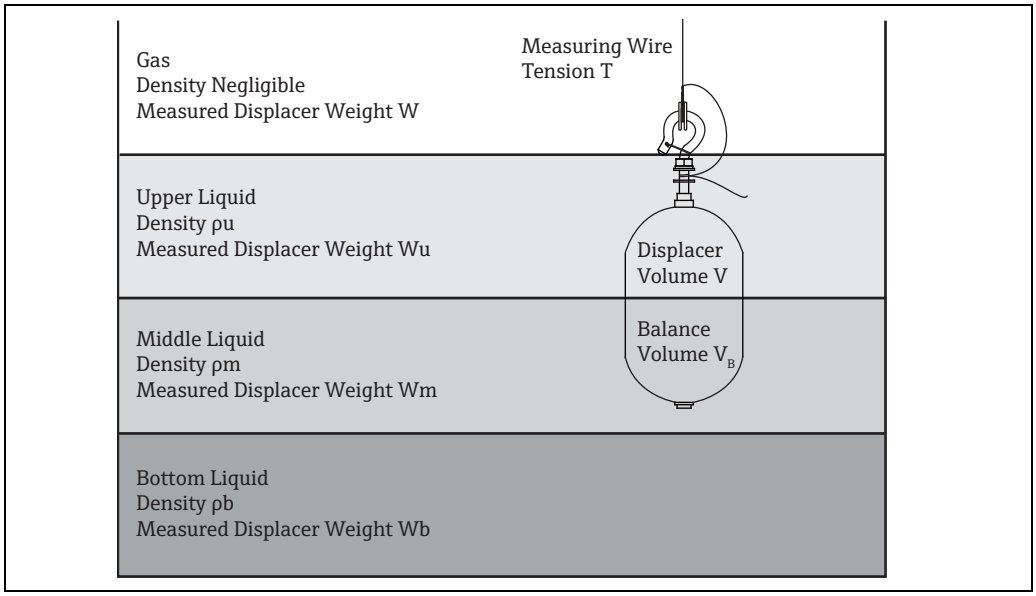

Figure 55: Calculation of levels and densities

Surface and interface levels
While the measured surface or interface level is constant, the displacer rests at the balancing position. The tension on the measuring wire is proportional to the displacer weight diminished by the buoyancy forces in both layers:

Level	Formula
Liquid Level	T = W - Vвρu
Upper Surface	T = W - Vвρm - (V - Vв) ρu
Middle Surface	T = W - Vвρb - (V - Vв) ρm

A rise or fall of the level will increase or decrease the displacer volume. If this change exceeds the volume tolerance set at matrix position GVH345 "VOLUME TOLERANCE", then the corresponding change will actuate the motor of the NMS5 till the balancing condition is fulfilled again.

Tank bottom level
For bottom level measurement, the balancing condition is defined as

$$T = W - (V + V_B)\,\rho b$$

Densities

The upper, middle, and bottom densities are calculated by the following formulas.

- Upper density (Pu) and density profile

$$\rho u = \frac{W - Wu}{V}$$

- Middle density (Pm)

$$\rho m = \frac{Wu - Wm}{V} + \rho u$$

- Bottom density (Pb)

$$\rho b = \frac{Wm - Wb}{V} + \rho m$$

Draft (distance from liquid surface to the bottom of displacer)

The draft varies depending on the shape of the displacer. For cylindrical shape, the draft is

$$D = (V_2 - V_1) / A \times 10 + h$$

where the variables and constants have the following meanings.

$= (V_1 - V_2 - V_3) / A \times 10 + h + h_1$

V_1: Displacer Balance Volume (69ml)

V_2: Displacer Lower Hemisphere Volume

V_3: Displacer Bottom Stub Volume

A: Cross-section of Displacer

h : Height of Lower Cone

h_1: Height of End of Cone

For example: standard displacer Ø50.8 (2) cylindrical shape

V_1: Balance Volume (69ml)

V_2: Volume of Lower Cone (24.46ml)

V_3: Volume of End of Cone (0.12ml)

A: Cross-section of Displacer (20.26cm²)

h_1: Displacer Bottom Stub Height (20mm (0.784in))

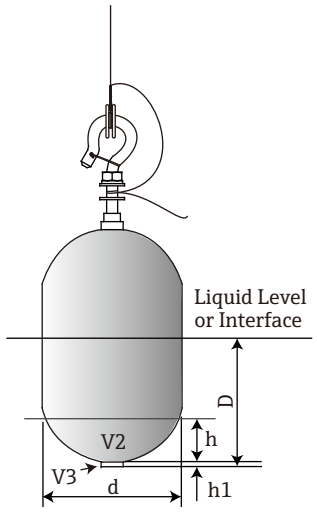

Figure 56: Variables and constants for displacer

The surface or interface level should be within the cylindrical part of the displacer and approximately in the middle of its total height.

8 Commissioning

8.1 Initial settings

All of the initial settings are required for NMS5 in most case. However, depending on NMS5 specification, some settings may not be required. Set Access code 51 at GVH039 before applying the initial settings.

8.1.1 System calendar/clock (GVH193 to 197)

Calendar/Clock values are set at factory (Japan Standard Time) prior to delivery. Change the data to reflect local time.

8.1.2 Density values (GVH005 to 007)

⚠ CAUTION

Always set GVH005 Upper Density for actual density data, in LPG and any application where the actual density is 0.7000 g/ml or less. failure to set this data may result in level gauge malfunction.
Density values for 3 liquid phases are set to 1.000 g/ml prior to delivery. Change the data to reflect actual density values. For tanks with only one liquid phase, set Upper Density. For tanks with 2 or 3 clear phases, set Middle and Bottom densities too.

Minimum difference between phase settings should be at least 0.100 g/ml.
GVH005≤GVH006≤GVH007

Example:

- GVH005 Upper Density: 0.758/ml
- GVH006 Middle Density: 0.880/ml
- GVH007 Density Bottom: 1.000/ml

8.1.3 Tank height (GVH140)

Tank height value is set to default value at factory prior to delivery. Tank height is the reference height, usually a gauging hatch on the tank that is used during manual level measurements. Change GVH140 to equal the reference height.

GVH141 "Dip Point Offset" will *automatically* change to reflect the difference in height between the reference height and the NMS5 reference position.

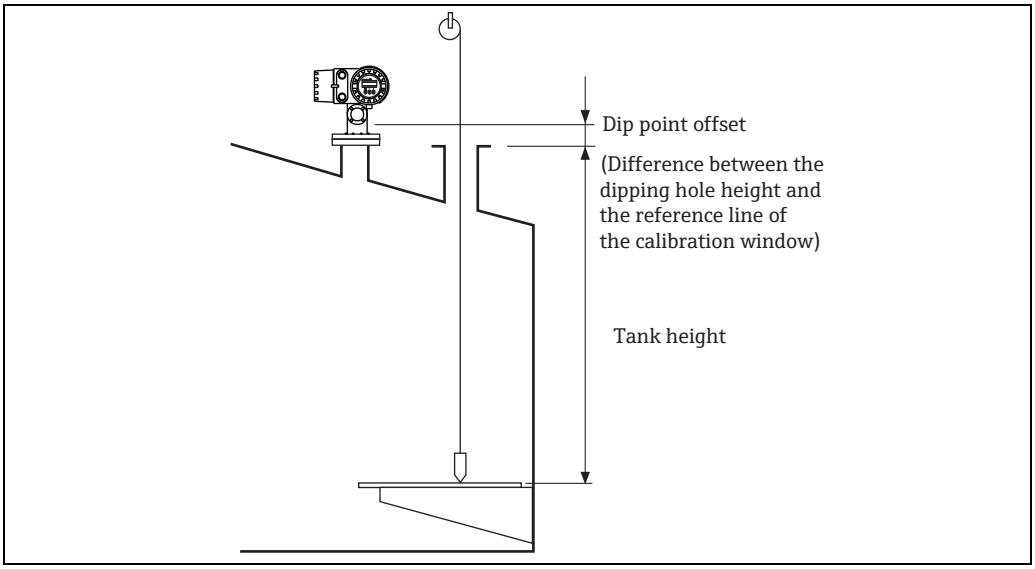

Figure 57: Tank height

8.1.4 Upper and lower stop (GVH161/162)

Upper and Lower Stop determine the highest and lowest point of displacer movement. These data are set to 16000mm and 0mm respectively at factory prior to delivery. Change these data to the desired actual Upper and Lower limit values.

8.1.5 Communications address (GVH285)

Several types of digital output communication protocols are available when ordered from Endress + Hauser. NMS5 is delivered with communications hardware and/or software installed. Only minimal matrix parameter setting, Access code 51, is required.
Communications protocol is displayed and selected at GVH286 Protocol. NMS5 has been preset at factory, it is not necessary to change the setting.
At GVH285 select the desired device address for NMS5. Address range: 0 to 9, 00 to FF, or 1 to 247 for Modbus.

- FF is fixed for MIC protocol. WM550 and M/S address setting is done via dip switches on the communications module inside NMS5.
- For Rackbus, termination resistors should be set on NMS5 at end of loop.
- Enraf BPM address range is 00 to 99. Refer to "8.5 Remote Communications".

8.1.6 Proactive safety function (GVH157/158/159)

Matrix	Setting
GVH157	Service Mode: default = OFF. Select OFF if GVH158 Prosafety = ON. Select ON only when performing maintenance on NMS5. ⚠ WARNING Selecting ON disables the Proactive Safety function! Access code 530
GVH158	Prosafety: default = ON. Select OFF only if the Proactive Safety function will not be used. ⚠ WARNING Failure to confirm ON disables the Proactive Safety function! Access code 530
GVH159	Safety Level: default = 65000.0mm (WM550.), or = 99999.0 mm (other protocols) Possible data values depend on receiver specification (see table below) Level value transmitted to the receiver if a fault occurs. Access code 530

Data range of safety level by output protocol

Protocol	Data Range	Data Format
Modbus	0.0 to 99999.0mm	Float
V1	0 to 99999.9mm	ASCII / 6 digit
MDP	0 to 99999mm	BCD / 5digit
WM550	0 to 65000mm	16bit
Mark/Space	19.999m/32.699m	20bit BCD / 5 digit
Enraf BPM	0 to 99999.9mm	6 or 7 byte
Rackbus	0 to 99999.9mm	Float
HART	0 to 99999.9mm	Float

8.1.7 Analogue output (GVH250 to 256)

When specified and ordered from Endress+Hauser, NMS5 is equipped with analogue output hardware installed. Function settings may be changed as follows:

Function	Setting
Assign Output 1	Assign level or temperature to channel 1 output.
Adjust 4mA	Set desired value at which level or temperature outputs 4 mA.
Adjust 20mA	Set desired value at which level or temperature outputs 20 mA
Assign Output 2	Assign level or temperature to channel 2 output.
Adjust 4mA	Set desired value at which level or temperature outputs 4 mA
Adjust 20mA	Set desired value at which level or temperature outputs 20 mA.
Device at Alarm	Select type of output for alarm

8.1.8 Contact relay alarm output (GVH240 to 247)

When specified and ordered from Endress+Hauser, NMS5 is equipped with contact relay alarm output hardware installed. Function settings may be changed as follows:

Function	Setting
Select Relay	Select relay number from 1, 2, 3 or 4.
Assign Relay	Select output definition from range of choices: None, Level, Liquid Temperature, Caution, Warning, Emergency Error, Balance Signal.
Relay Function	Select High or Low.
Switching Point	Set value at which relay is activated.
Hysteresis	Set hysteresis value for selected relay.
Relay on Alarm	Select relay of Normal Open or Normal Closed. NOTICE When selecting Output2: "4: 2 x relay SPST, TUV with overspill prevention" at order code 50, relay type is specified as only Normal Closed.
On Delay Time	Set time delay value for alarm output start.
Off Delay Time	Set delay value for alarm output stop.

8.2 Settings for NMT 53x connections

The following settings are required to display NMT 539 data on NMS5 screens.

Item	Procedure	Remarks
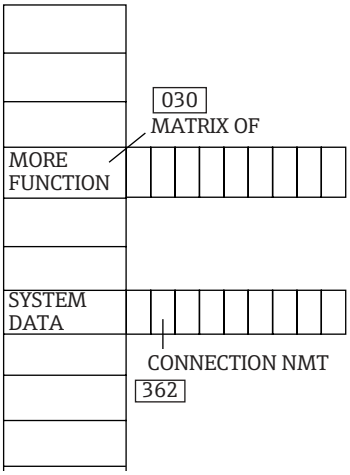 Figure 58: Matrix group: service 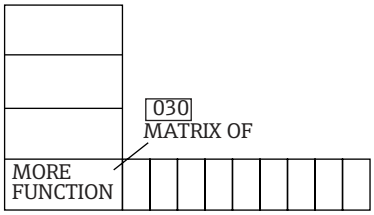 Figure 59: Static matrix	1. In Static Matrix "MORE FUNCTION", invoke GVH030 "MATRIX OF" and select "SERVICE". 2. Invoke the Dynamic Matrix GVH362 "CONNECTION NMT" screen. 3. Use the "+" and "-" keys to display "AVERAGE" and press "E" to set data. 4. Press "E" to return to "SYSTEM DATA" and press the "-" key to return to "MORE FUNCTION". 5. Invoke Static Matrix "GVH030 MATRIX OF". NMS5 matrix is divided into matrix groups. Select "TEMPERATURE" from these groups. 6. "EDITING ENABLED" is displayed on the LCD. 7. The average liquid temperature is displayed on Dynamic Matrix screen GVH440. 8. The temperature of each contact is displayed on Dynamic Matrix screens GVH450 to GVH459.	

By setting the HART retry number, it is possible to change the HART communication error detection time of connected Prothermo to suit application needs.
When NMS5 cannot read data from Prothermo, it retries. The retry number can be set at the matrix position GVH 773. It is possible to set the number of retries from 0 to 99 by the access code 530.

- The factory default HART retry number is 50. This value is suitable for a standard situation where HART recommended cable is used. The detection time for a real error is approx. 17 minutes because HART retry is executed 50 times to determine a real error.
- As the number decreases by 1, real errors can be detected faster by approximately 20 seconds. When the HART retry number setting is 0, the detection time of real errors is approx. 40 seconds. However, a false error may occur depending on the installation site conditions.
- As the number increases, false errors occur less. However, it takes longer to detect a real error. The detection time for real errors is approx. 34 minutes when the number is set to 99.

8.3 Settings for connection to NRF560

To connect NRF560, NMS5 requires the following settings.

⚠ CAUTION
Turn on the power to NMS5 first.

Item	Procedure	Remarks
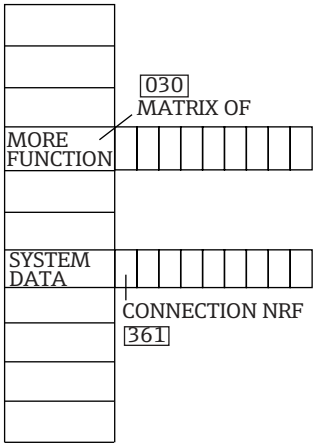 Figure 60: Matrix group: service	1. In Static Matrix "MORE FUNCTION", invoke GVH030 "MATRIX OF" and select "SERVICE". 2. Invoke the Dynamic Matrix GVHH361 "CONNECTION NRF" screen. 3. Use the "+" and "-" keys to select either "CONTACT 1" or "CONTACT 2".	▪ Set access code 51. ▪ CONTACT 1... NRF 560 software version 1.6x and earlier (those NRF 560 that indicate no software version correspond to connection type 1). ▪ CONTACT 2... NRF 560 software version 1.8x and later.

8.4 Liquid level calibration

8.4.1 Opened tank

Preparation
Select LEVEL at GVH020 Operation. The displacer will descend to the liquid surface and balance.
When "BAL" is displayed, the displacer stopped moving.
When measuring the liquid level manually, use an approved method.

Set level (GVH150) for opening tank
Input the value at GVH150 after measuring the dipping level.

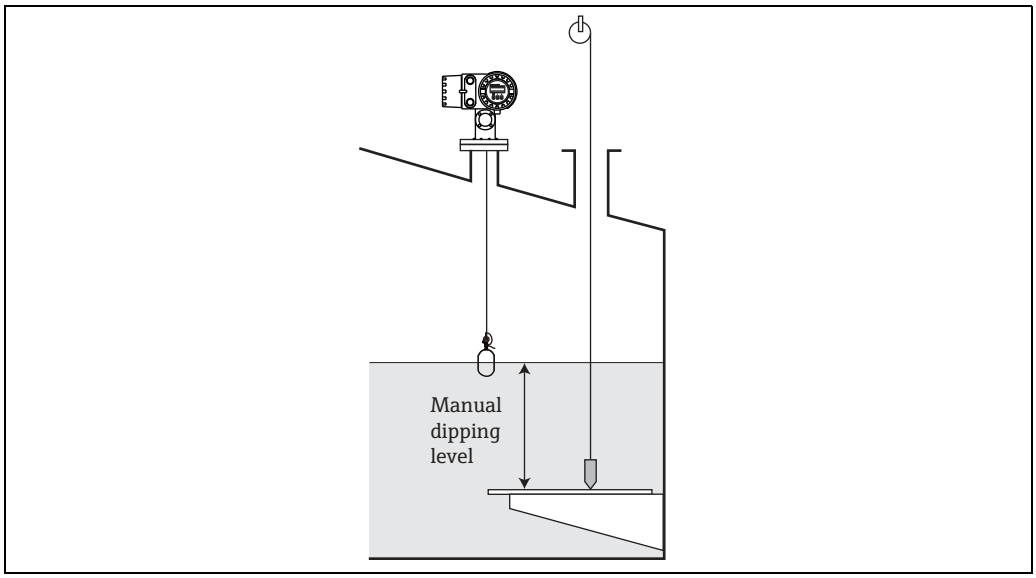

Figure 61: Calibration Level (Manual Dipping Level)

When there is no liquid in the tank;

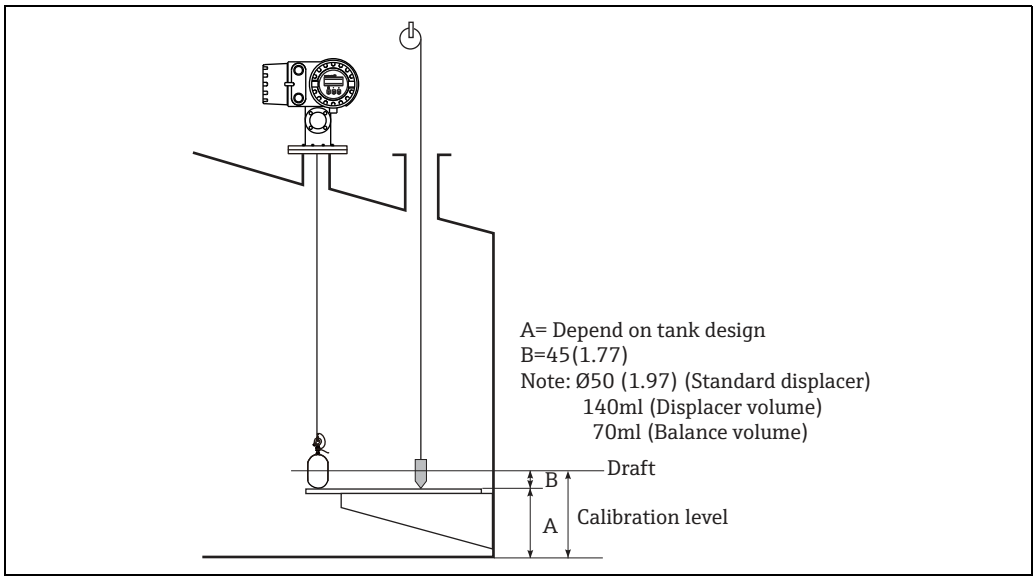

Figure 62: Calibration level (empty tank), unit of measurement: mm (in)

⚠ CAUTION

When there is no liquid in the tank, level calibration is not 0mm on the measurement principle. When 0mm level calibration is needed, refer to GVH004(BOTTOM LEVEL) or GVH142(DISPLAC. DRAFT).

8.4.2 Closed tank

Level calibration procedure for closed tank

⚠ CAUTION
Closed tanks (e.g. LPG) cannot be hand-dipped. Follow the procedure shown below.

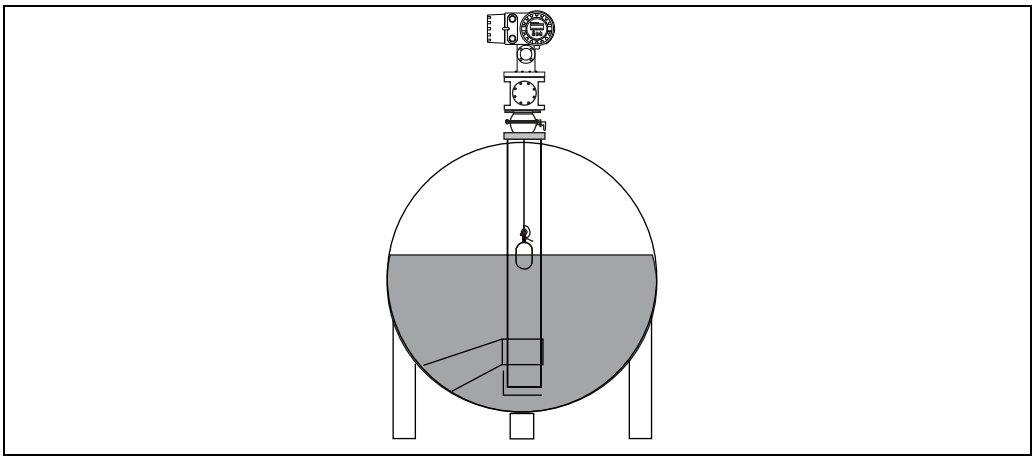

Figure 63: Level calibration

1. Check the NMS parameter

Matrix	Item
GVH005	UPPER DENSITY
GVH340	WIRE DRUM CIRC.
GVH342	DISPLACER WEIGHT
GVH343	DISPLACER VOLUME
GVH344	BALANCE VOLUME

2. Set the Level gauge at GVH020(BOTTOM)

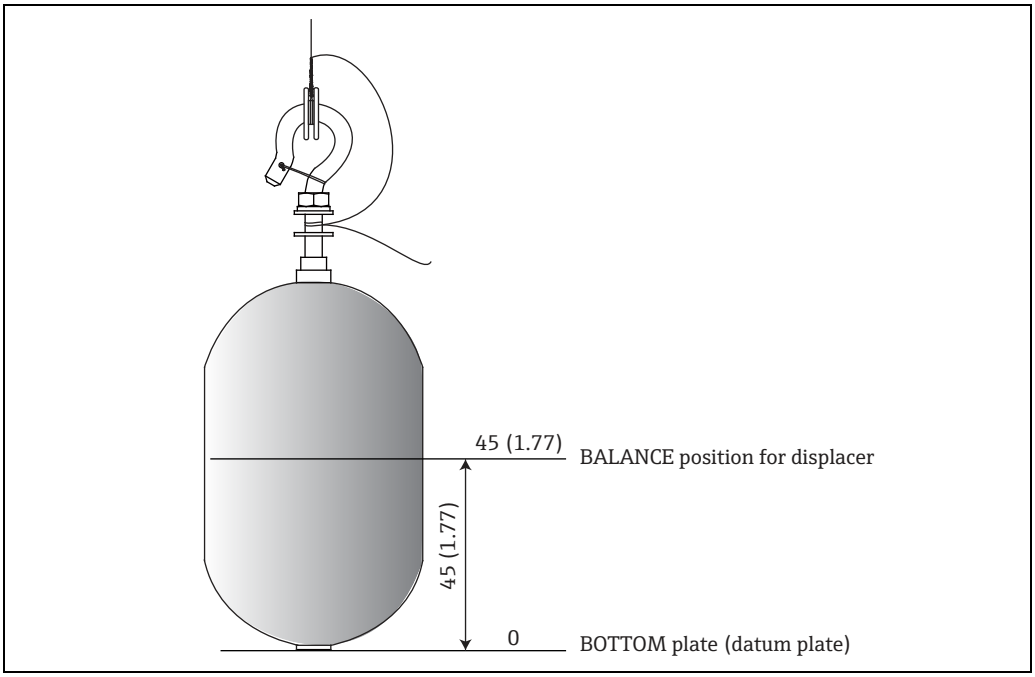

Figure 64: Draft level of displacer

3. Check that the displacer is balance and LCD (display) shows Balance.

4. Calculate the displacer balance position.
   - In case of Ø50mm standard displacer, balance volume(GVH343) is reference value (a half of displace volume)
   - The balance point is 45mm from the bottom of the tank.

Refer to Appendix "14.3 Displacer".

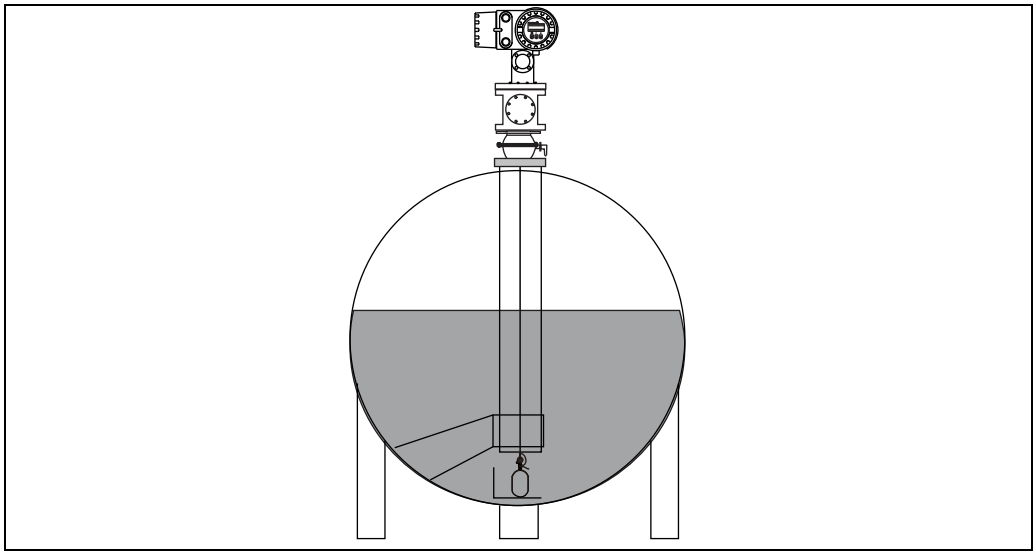

Figure 65: Level calibration

5. Set Level Calibration to 45mm at GVH150 (SET LEVEL) in G1 MATRIX (Calibration). The bottom is ZERO.
   - If the bottom plate is not Zero (ex; X mm), adjust the level value by adding to the value.

   LEVEL = X + 45(mm)

6. Set level gauge at GVH020 (BOTTOM).

This completes the level calibration procedure.

8.5 Remote communications

8.5.1 Digital output

The desired loop address for most digital protocols can be set at GVH285 (Address). The allowable range for setting varies depending on the protocol installed in NMS5. The range has 0-9, 00-FF (FF is fixed for MIC protocol), or 1-247 for Modbus.

- WM550 and Mark Space protocols addresses must be set by switches on the communications module inside NMS5.
- Enraf BPM: Address range is 00-99. A-F is not available.

8.5.2 Whessoe Matic 550 (WM550) communication board setting

Jumper setting
Jumper settings for WM550 communication board

Jumper	Function	Default Condition
J3 (Mode)	Use EPROM [IC4]->short	Short
J4 (Test)	Software testing	Short
J6 (Reset)	Reset	Open
J7 (Watch dog)	Watch dog setting	Short

If software reset is required; J6 has to be short.

Polling address setting

WARNING
Polling addresses are set by mechanically at SW1 on WM550 communication board (not by accessing NMS programming matrix). Check all polling addresses before setting.
The following table shows about address setting.

Switch position	Value
1	1
2	2
3	4
4	8
5	16
6	COMPATIBILITY MODE

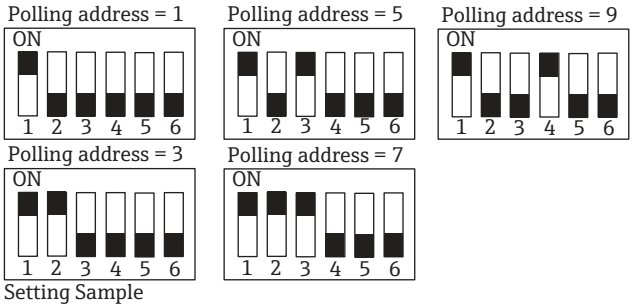

Setting Sample

For current loop setting, refer a operating manual for Whessoe 1098 or RTU 8130 operating manual.

8.5.3 Mark/Space(M/S) communication board setting

Jumper Setting
Jumper settings for M/S communication board

Jumper	Function	Default condition
J3 (Mode)	Use EPROM [IC4]->short	Short
J3 (Reset)	Reset	Open
J3 (WD)	Watch dog setting	Short

Polling address setting

WARNING

Polling addresses are set by mechanically at SW1 (1-8) and SW2(1-2) on Mark Space communication board (not by accessing NMS programming matrix). Check all polling addresses before setting. The following table shows address setting.

Switch Position	Value
SW1-1	1
SW1-2	2
SW1-3	4
SW1-4	8
SW1-5	16
SW1-6	32
SW1-7	64
SW1-8	128
SW2-1	256
SW2-2	512

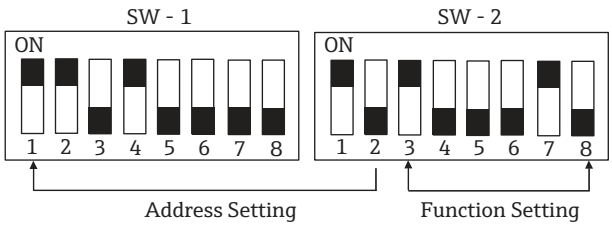

Setting Example: 267

Function setting
Each function is set at SW2-* shown as follows.

Switch	Function	Default condition
SW2-3	ON: Data transmission under unbalanced condition	ON
SW2-4	ON: low baud rate setting	OFF
SW2-5	ON: Feet data OR 0-20m, OFF: 0-30m	OFF
SW2-6	ON: Measured data converted to feet	OFF
SW2-7	ON: Temperature data (57 bits)	ON
SW2-8	ON: Deg. F measured temperature unit, OFF: Deg. C	OFF

8.5.4 ENRAF BPM communication board (COM-3) setting

COM-3 Jumper setting

Jumper	Function	Default Condition
JP1 (Mode)	ROM type setting 1-2 short: 27C4096 2-3 short: 27C1024	2-3 short
JP2 (Reset)	CPU mode setting (Fixed)	1-2 open 3-4 short 5-6 short
J3 (WD)	Baud rate setting 1-2 short: 1200 bps 1-2 open: 2400 bps	1-2 open

Communication setting
Select "V1/ENRAF BPM" at the matrix position GVH286.

Communication setting
Polling address is set at GVH285 "ADDRESS" of NMS5 matrix. The allowable range is from 00 to 99.

⚠ WARNING
A to F for polling address can not use.

Communication setting

- Switch S1: Reset switch
- Connector J3: Communication port for debugging

8.5.5 Analog output

Setting of analog output 4-20mA is available when ordered from Endress+Hauser. NMS5 is delivered with analog output hardware installed. For the following matrix parameter settings, Access code 51, is required.

Matrix GVH	Item	Setting
250	Assign Output	Assign analog output (Level or Temperature) for channel 1.
251	Adjust 4mA	Set level or temperature value for 4mA output on channel 1. Available only when GVH250= "Level" or "Liquid Temp" Level: 0 to 99999mm Temperature: -999 to 999°C Default: 0mm / 0°C
252	Adjust 20mA	Set level or temperature value for 20mA output on channel 1. Available only when GVH250 = "Level" or "Liquid Temp." Level: 0 to 99999mm Temperature: -999 to 999°C Default: 0mm / 0°C
253	Assign Output 2	Assign analog output (Level or Temperature) for channel 2.
254	Adjust 4mA	Set level or temperature value for 4mA output on channel 2. Available only when GVH253 = "Level" or "Liquid Temp." Level: 0 to 99999mm Temperature: -999 to 999°C Default: 0mm / 0°C
255	Adjust 20mA	Set level or temperature value for 20mA output on channel 2. Available only when GVH253 = "Level" or "Liquid Temp." Level: 0 to 99999mm Temperature: -999 to 999°C Default: 0mm / 0°C
256	Device at Alarm	Select type of output for alarm. Select from OFF, HOLD current output, Maximum value or Minimum value. OFF: current does not apply when an error occurs. HOLD: current which is applying is fixed when an error occurs. MAX: 22mA current applies in stead of present current. MIN: 2mA current applies in stead of present current. Default: OFF

⚠ CAUTION
If "LEVEL", confirm GVH158 (Prosafety) is "NO".

8.5.6 Contact relay alarm output

The specification of alarm for output contact relay is delivered as a part of NMS5. This specification allows a maximum of 4 output contact relay settings. Set access code 51 in case of the following matrix parameters.

Matrix GVH	Item	Setting
241	Select Relay	Use +/- and E keys to select to activate Contact Output Relays 1 to 4. Default value = 1.
242	Assign Relay	Select output definition from range of choices: None, Level, Liquid Temp, Caution, Warning, Emergency Error, and Balance Signal. Default value = NONE.
243	Relay Function	Select High or Low function, available only when GVH241 = "Level" or "Liquid Temp." Default value = HIGH.
244	Switching Point	Set level (0-99999 mm) at which relay is activated, available only when GVH241 = "Level" or "Liquid Temp." Default value = 0 mm.
245	Hysteresis	Set hysteresis value (0-99999 mm) for selected relay, available only when GVH241 = "Level" or "Liquid Temp." Default value = 0 mm. NOTICE When selecting Output2: "4: 2 x relay SPST, TUV with overspill prevention" at order code 50, relay type is specified as only Normal Closed.
246	Relay on Alarm	Select from Normal Open or Normal Closed, available only when GVH241 = "Level" or "Liquid Temp." Default value = NORMAL OPENED.
247	On Delay time	Set delay time (0-999 seconds) for alarm output start, available only when GVH241 = "Level" or "Liquid Temp." Default value = 0 seconds.
248	Off Delay Time	Set delay time (0-999 seconds) for alarm stop, available only when GVH241 = "Level" or "Liquid Temp." Default value = 0 seconds.

Description of error message

Error type	Description
LEVEL	Liquid level exceeded the designated upper or lower limit.
LIQUID TEMPERATURE	Liquid temperature exceeded upper or lower limit.
CAUTION	Auto wire calibration error; Auto displacer calibration error
WARNING	Weight value exceeded the designated alarm sending limit (upper limit: GVH162 or lower limit: GVH163). (e.g. local communication error, LCD error, communication error, EEROM data error)
EMERGENCY ERROR	Z-phase no input error, ADC sensor error, communication IC error, A-phase no input error, Driver error, power failure

8.5.7 Relay logic

Module name	I/O - 3		
Alarm output, Standard (Order Code position 050= 1,2,3 or 5)	4 relays with potential-free change-over contacts, freely assignable to measured value		
Hysteresis, Alarm output	Switch points and switching hysteresis freely adjustable, residual current fail-safe mode: minimum or maximum, selectable		
Operation output logic		Relay Condition	
	Initial Configuration (Normal Status)	Open	Closed
	On alarm	Closed	Open
	On device error	Closed	Open
	On abnormal power supply (5% lower than, higher than specified power supply	Custody Transfer Closed	Custody Transfer Open
	Power outage	Hold last condition	
Switching capacity, Alarm output	▪ Max. 250VAC, 2A/62.5W ▪ Max. 220VDC, 2A/60W ▪ FM/CSA: 30VAC, 2A/42VDC, 2A, 60W ▪ TIIS: 250VAC, 1.5A/30VDC, 9W		

Alarm output, Overspill prevention (Order Code position 050=4)	2 relays with potential- free changeover contacts, assignable to Level	
Hysteresis, Alarm output	Switch points and switching hysteresis freely adjustable, residual current fail-safe mode: minimum or maximum, selectable	
Operation output logic		Relay Condition
	Initial Configuration (Normal Status)	Closed
	On alarm	Open
	On device error	Open
	On abnormal power supply (5% lower than, higher than specified power supply	Open
	Power outage	Open
Switching capacity	▪ Umax. 200VDC/200VppAC ▪ Imax. 0.5AC, DC or peak AC ▪ Pmax. 15W	

Operation input	2 photocouplers, for external input from controller (tumbler switch, DCS, etc.)		
Operation output logic	Gauge Status	CTR1	CTR2
	Level	0 (OFF)	0 (OFF)
	UP	1 (ON)	0 (OFF)
	STOP	0 (OFF)	1 (ON)
	Interface Level	1 (ON)	1 (ON)
Input voltage	15VDC, active circuit (supplied by NMS5)		
Input current	Approximately 5mA		

8.6 Density and density profile measurements

Two different types of density measurement are available when ordered from Endress+Hauser.

- Spot density measurement for up to 3 liquid phases
- Density profile measurement
  1. Tank profile for up to 16 points for total liquid height.
  2. Tank profile for upper phase liquid only.
  3. Tank profile based on a manually entered profile parameter.

8.6.1 Spot density measurement

Spot measurement for up to 3 liquid phases is an option that is available when ordered from Endress+Hauser.
The following preconditions are required in order to assure safe and accurate operation.

- NMS5 must be configured for Spot density measurement as ordered from Endress+Hauser. For information regarding upgrading your NMS5, contact Endress+Hauser representatives.

- Density values:

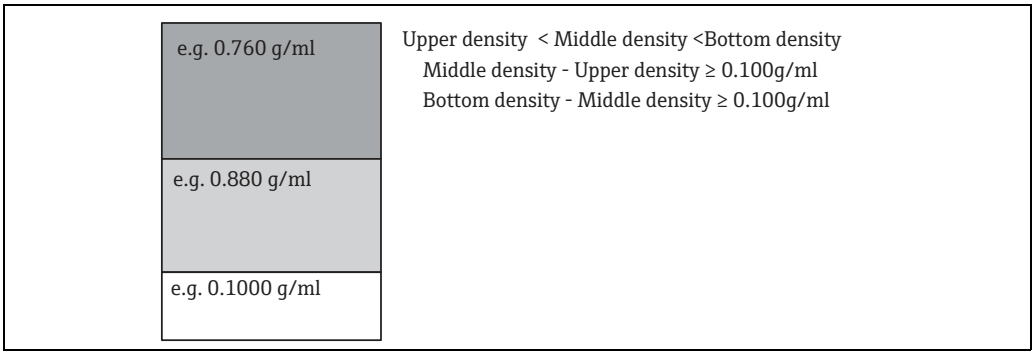

Figure 66: Density measurement

- Density values can be viewed and changed at the following matrix positions:
  GVH005: Upper Density
  GVH006: Middle Density
  GVH007: Density Bottom

- The displacer is balanced at liquid level and the liquid surface is not moving.

For spot density measurement, the following parameters can be set or selected. However the factory default settings also can be used.

Matrix	Item	Setting
GVH143	Displacer Raise Density	Set distance (0-300mm) for displacer to rise the level position above during measuring density. Default setting = 150 mm. Observe the rule: GVH143 + GVH144 = 300 n, where n = integer.
GVH144	Displacer Submerge Density	Set distance (0-300mm) for displacer to submerge the level position above during measuring density. Default setting = 150 mm. Observe the rule: GVH143 + GVH144 = 300 n, where n = integer.

Operation
Select the measurement of the density desired from UPPER DENSITY, MIDDLE DENSITY, or DENSITY BOTTOM at GVH020 "OPERATION". NMS5 raises the displacer up out of the liquid, measures its weight, and sends the displacer down to measure the density. After density is measured, the displacer remains at that position until UP or LEVEL command are selected at GVH020.

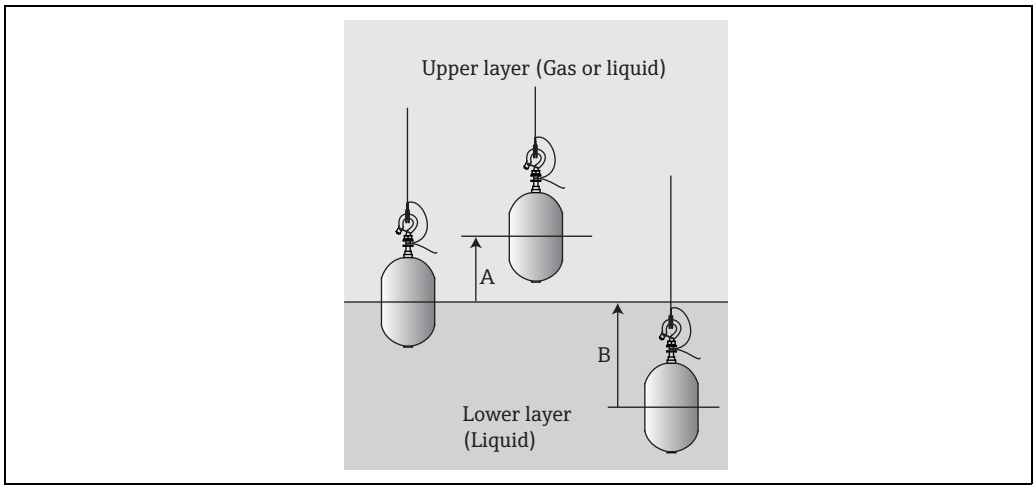

Figure 67: Density measurement

8.6.2 Density profile measurement

Tank profile density measurement
In addition to the preconditions, the following additional preconditions are required in order to assure safe and accurate operation for the density measurement of the tank profile.
Access Code 51 is required to edit parameters.

- NMS5 must be configured for Spot & Profile density measurement as ordered from Endress+Hauser. Contact Endress+Hauser for the information regarding upgrading NMS5.
- The standard tank bottom level (GVH004) is zero. If not, the formula used for calculating the interval between profiles is GVH000 / GVH841. The displacer touches the bottom of the tank before measuring a lower level (e.g. 884mm).
- If Bottom Level is not 0 mm, select Manual I/F Profile at GVH840. Set GVH843 I/F Manual Level = actual bottom level e.g. 884mm. In this case, the intervals will be calculated based on GVH000 - GVH843/GVH841.
- The density profile can be operated when the liquid is still in the tank. However, depending on the height of liquid level, it may take 1 hour or more to operate the density profile.

Matrix	Item	Setting
GVH154	SAFE DENSITY	Select the desired resultant condition when density profile measurement fails due to displacer reaching the low-limit for density profile operation (set in GVH155). Selecting "ON" will result in STOP operation. Selecting "IGNOR" will result in "LEVEL" operation, displacer will return to liquid level. Selecting "OFF" will leave the displacer at the position where density profile measurement failed, and in "DENSITY" operation.
GVH155	DEN. OPE. LEVEL	Set the lower limit for displacer movement during density profile operation Default setting = 300 mm.

Additional matrix parameter settings are required for remote communications via WM550 communications protocol. Refer to Section "14 Matrix, (Dynamic Matrix, Device Data: G2), WM550 DENS. SEL.".

- A. Tank profile for up to 16 points for total liquid height
  GVH840 Ope Select: Select 1: Tank Profile.

- B. Tank profile for upper phase liquid only
  GVH840 Ope Select: Select 2: I/F Profile.

- C. Tank profile for based on a manually entered profile parameter.
  GVH840 Ope Select: Select 3: MANU.I/F Profile.

When choosing A, B, and C above, the following parameters can be set or select. The factory default settings also can be used.

Matrix	Item	Setting
GVH841	Ope Point	Set the number of measurement points (2-16) for Tank Profile measurement. Default setting = 2.
GVH843	I/F Manu. Level	Manually set the water interface level (0-99999.9mm) to be referenced during the tank profile measurement. Default setting = 0 mm. Only used with C, tank profile for based on a manually entered profile parameter.
GVH844	Bal. Level	Set the allowance for level movement (1.0 -99.9 mm) prior to Tank Profile operation. If the level movement exceeds this value, profile operation is canceled. Setting 99.9mm allows Profile measurement to proceed, regardless of level movement. Default setting = 2.0 mm.
GVH845	Up Wait Time	Set waiting time (1-31 minutes) for displacer weight to be measured in air, when making the weight table at start of profile operation. Default setting = 1 minute.
GVH846	Liq Wait Time	Set the time (1-31 minutes) for displacer to stop at each measurement position during profile operation. Default setting = 1 minute.
GVH847	Ope Wait Time	Set maximum waiting time (1-31 minutes) for conditions in GVH844 (Bal Level) to be satisfied before profile operation begins. E.g. if the level movement exceeds setting at GVH844, NMS5 is in "standby" for the time set in this matrix. After the maximum time elapses, profile operation is canceled. Default setting = 1 minute.

Initial setting of tank profile (density profile) measurement
All of necessary set up can be done at "G8 Tank Profile" matrix. There are six factors to configured prior to the actual operation.

GVH840 OPE. SELECT

Item	Procedure	Remarks
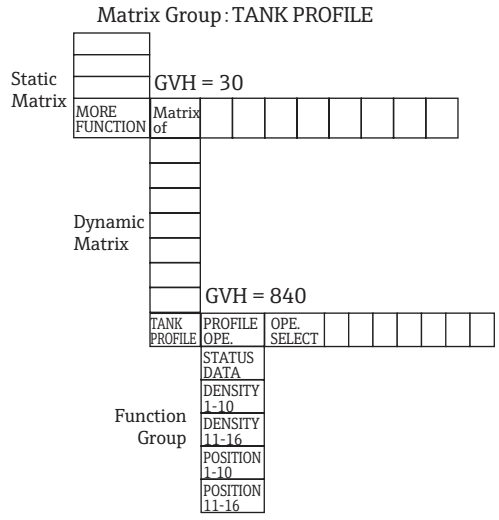 Figure 68: GVH840	1. Select GVH030 "MATRIX OF" in the row "MORE FUNCTION" on Static Matrix, then select "Tank profile".	▪ Set access code to 50.
	2. Select function group "PROFILE OPE" and GVH840 "OPE SELECT".	▪ The row of PROFILE OPE is the only function group that needs configuration for the density profile operation.
	3. Select 1: "TANK PROFILE" by pressing + or - key. 4. Press E to configure.	▪ Selection of "0: SPOT" enables Upper Density measurement instead of Density Profile measurment.

GVH841 OPE. POINT

Item	Procedure	Remarks
Matrix Group: TANK PROFILE Function Group GVH841 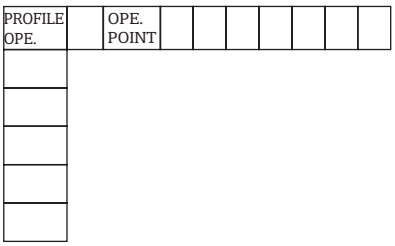 Figure 69: GVH841	1. Select GVH841 "OPE POINT " to determine number of density measuring points. 2. Enter required number by pressing + or - key, and select E to enter.	▪ Set access code to 51. Default value is 2 points and selectable up to 16 points. ▪ Whatever the number of measuring point is selected, the measuring interval & point between each point are automatically calculated within the liquid level.

GVH844 BAL. LEVEL

Item	Procedure	Remarks
Matrix Group : TANK PROFILE Function Group GVH844 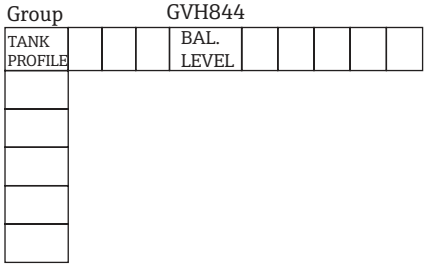 Figure 70: GVH844	1. Select GVH844 "BAL LEVEL" to determine the liquid stability range in order to start the operation. 2. Enter desired value by pressing + or - key and select E to enter. Input value of 99.9mm represents that the measuring procedure starts regardless of level condition.	▪ Set access code to 51. NMS software has a function to scan & record the liquid level every 5 minutes. ▪ NMS5 only starts the actual measurement when the liquid level is within the entered value compared to the recorded level data 5 minutes ago. This function ensures the safe operating condition to avoid filling or draining liquid from the tank.

GVH845 UP WAIT TIME

Item	Procedure	Remarks
Matrix Group : TANK PROFILE Function Group GVH845 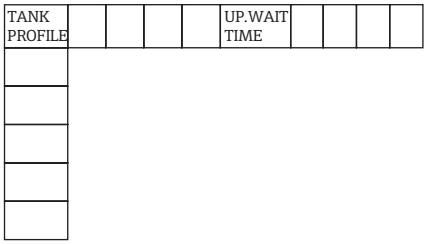 Figure 71: GVH845	1. Select GVH845 "UP WAIT TIME" to determine the displacer weight calibration interval in air. 2. Enter desired waiting time by pressing + or - key, and select E to enter.	▪ Set access code to 51. The displacer raises approximately 500mm above liquid surface after confirming the stability of liquid level within "BAL LEVEL" function. ▪ The displacer weight is calibrated at 8 different positions in air and the interval between those positions are adjustable within this function to allow excess liquid to drip off the displacer to achieve higher accuracy.

GVH846 LIQ. WAIT TIME

Item	Procedure	Remarks
Matrix Group : TANK PROFILE Function Group GVH846 TANK PROFILE | LIQ. WAIT TIME 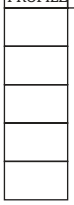 Figure 72: GVH846	1. Select GVH846 "LIQ. WAIT TIME" to determine the displacer weight calibration interval between each measuring point in the liquid.	▪ Set access code to 51. A small turbulence made by the movement of displacer itself may cause the liquid surrounding displacer to be unstable for the accurate measurement.
	2. Enter desired waiting time by pressing + or - key, and select E to enter.	▪ This function allows displacer to hold in each calculated position before actual measurement is proceeded based on the entered value.

GVH847 OPE. WAIT TIME

Item	Procedure	Remarks
Matrix Group : TANK PROFILE Function Group GVH847 TANK PROFILE | OPE. WAIT TIME 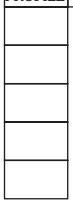 Figure 73: GVH847	1. Select GVH847 "OPE. WAIT TIME".	▪ Set access code to 51.
	2. Enter desired waiting time by pressing + or - key, and select E to enter.	▪ This function determines how long for the NMS to wait if "BAL. LEVEL" can not be established before quitting entire operation.

Operation of tank profile (density profile) measurement
After all the initial settings are completed, the actual operation can be proceeded by one simple command. The operation status regarding this function is displayed at GVH850 and the liquid level condition is also displayed at GVH851. Terms of status display and descriptions are listed below.

Operations status (GVH850, OPE. STATUS)

Status	Contents
0: Accepting	Accepting density profile command
1: Standby	Ready to execute density profile command
2: In operation	Executing density profile command
3: OPR. END	Density profile operation completed successfully
4: UN_BALANCE ERR	Fail: Required conditions for density profile operation not satisfied
5: IPR. ERR. STOP	Fail: Abnormal conditions occurred during density profile operation

Level condition status (GVH851, LEVEL CONDITION)

Status	Contents
0: Off Level Meas.	Active operation is not LEVEL (Profile cannot start).
1: Stable	Liquid level/surface is stable (Profile can start).
2: Unstable	Liquid level/surface is unstable (Profile cannot start).
3: Ignore condition	Ignores liquid level/surface condition (profile cannot start).

Item	Procedure	Remarks
Static matrix GVH020 OPE. OPE. LEVEL UP STOP BOTTOM LEVEL MIDDLE INTER LEVEL UPPER DENSITY MIDDLE DENSITY DENSITY BOTTOM REPEATABILITY WATER DIP Figure 74: Static matrix	1. Select GVH020 "OPERATION" in the Static Matrix and select "UPPER DENSITY".	▪ Set access code to 50. ▪ The operation command "UPPER DENSITY" is shared between spot and Tank Profile density measurement depends on GVH840 configuration.
	2. Press E to start the operation.	▪ The operation must start when the NMS is in Level measuring mode.
	3. Unless there is any incompatible circumstances during the displacer automatically returns to the level measurement after the last measuring point.	▪ To minimize the risk of safe operation, the displacer immediately returns to the Level measurement regardless of completing various data process.

Density profile operation diagram

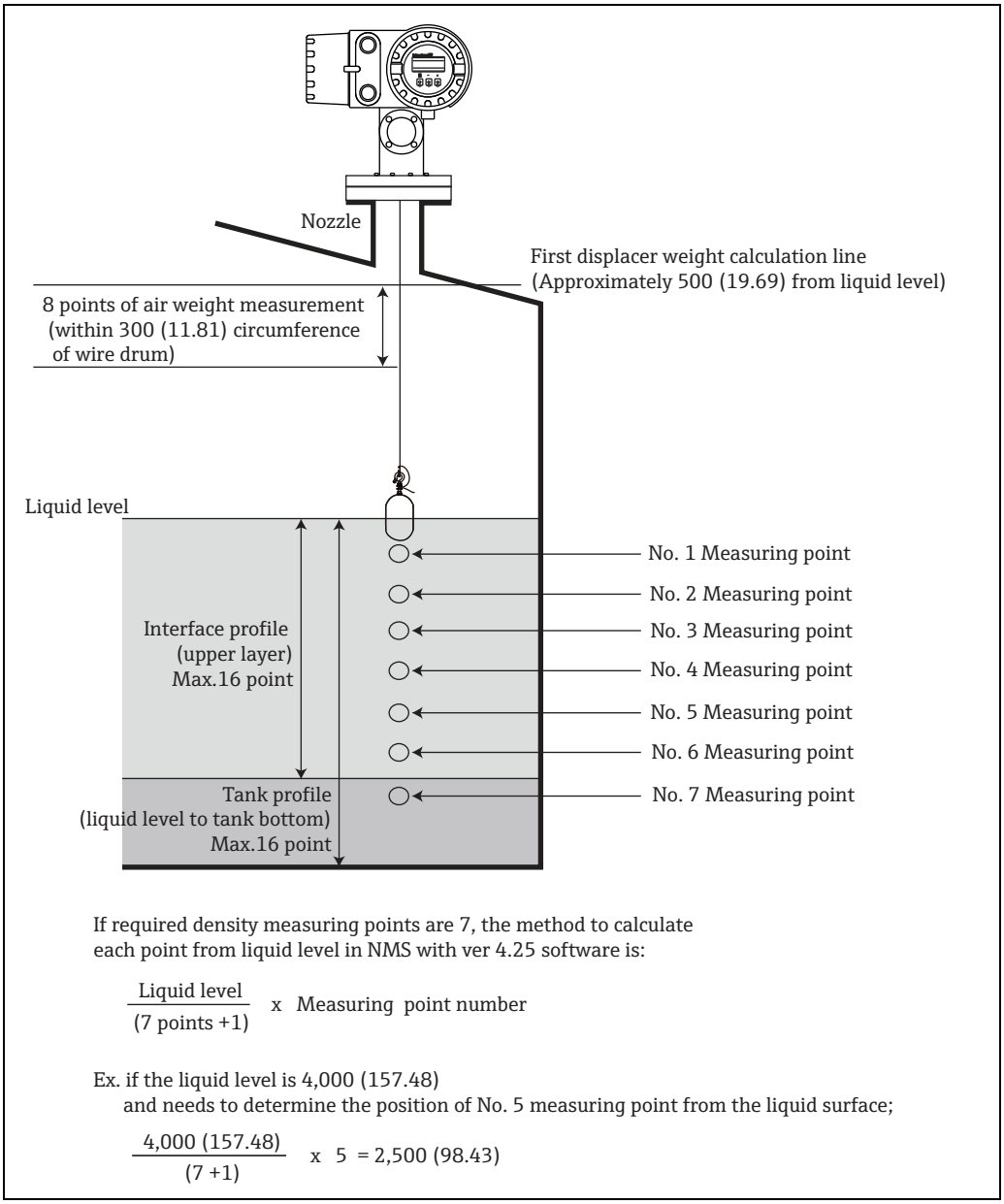

Figure 75: Density profile

Operation procedure

1. Set NMS5 so that it can measures the liquid level.
2. Raises the displacer and measure each weight of 8 measuring points in the air.
3. Measure the density at the setting position in the liquid level.
4. Return to level measurement.
5. Save the data in G8 matrix accordingly.

This completes the operation procedure.

⚠ WARNING

The average density and temperature data regarding density profile function (G8 Matrix) are completely different from the data on G0 static matrix which displays the conventional upper density (spot) and temperature (continuously scanned) data.

8.7 Interface measurement

NMS5 can measure interface levels via the following operations.

- Upper Interface Level: returns the level data for the interface between top 2 liquid phases. Displacer remains at interface level in UPPER INTERFACE operation.
- Middle Interface Level: returns the level data for the interface between bottom 2 liquid phases. Displacer remains at interface level in MIDDLE INTERFACE operation.
- Water Dip: returns the level data for the interface between top 2 liquid phases. Displacer returns to liquid level in LEVEL operation.

The following preconditions are required in order to assure safe and accurate operation.

- Density values:

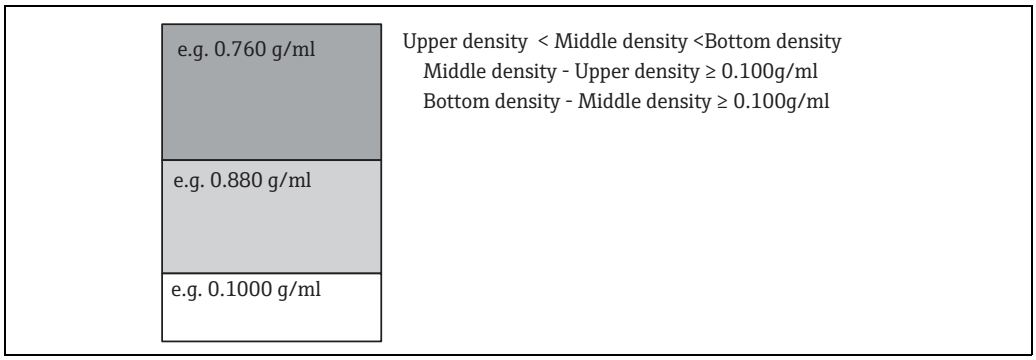

Figure 76: Interface measurement

Density values can be viewed and changed at the following matrix positions:

- GVH005: Upper Density
- GVH006: Middle Density
- GVH007: Density Bottom

Additional matrix parameter settings are required for remote communications via WM550 communications protocol. Refer to Section "14 Matrix, (Dynamic Matrix, Device Data : G2), WM550 ALM. SELECT.".

Operation:
After confirming the above pre-conditions, use the "+" or "-" keys to select the desired operation at matrix position GVH020 OPERATION. When the desired operation is displayed, press the "E" key.

8.8 Sealing of NMS5

NMS5 can be sealed, and data can be made unchangeable for custody transfer purposes as follows.

Sealing of NMS5 procedure

1. Set OPE. DENSITY at GVH278 as the liquid density (if the density is expected to change during operation, set the average value.).
2. Turn off the power supply, open NMS5.
3. Turn the micro switch to the "on position" on the printed circuit board TCB (see figure below). NMS5 will then enter "write-protect" mode and not accept any further level, weight, or density data changes.

This completes the sealing of NMS5 procedure.

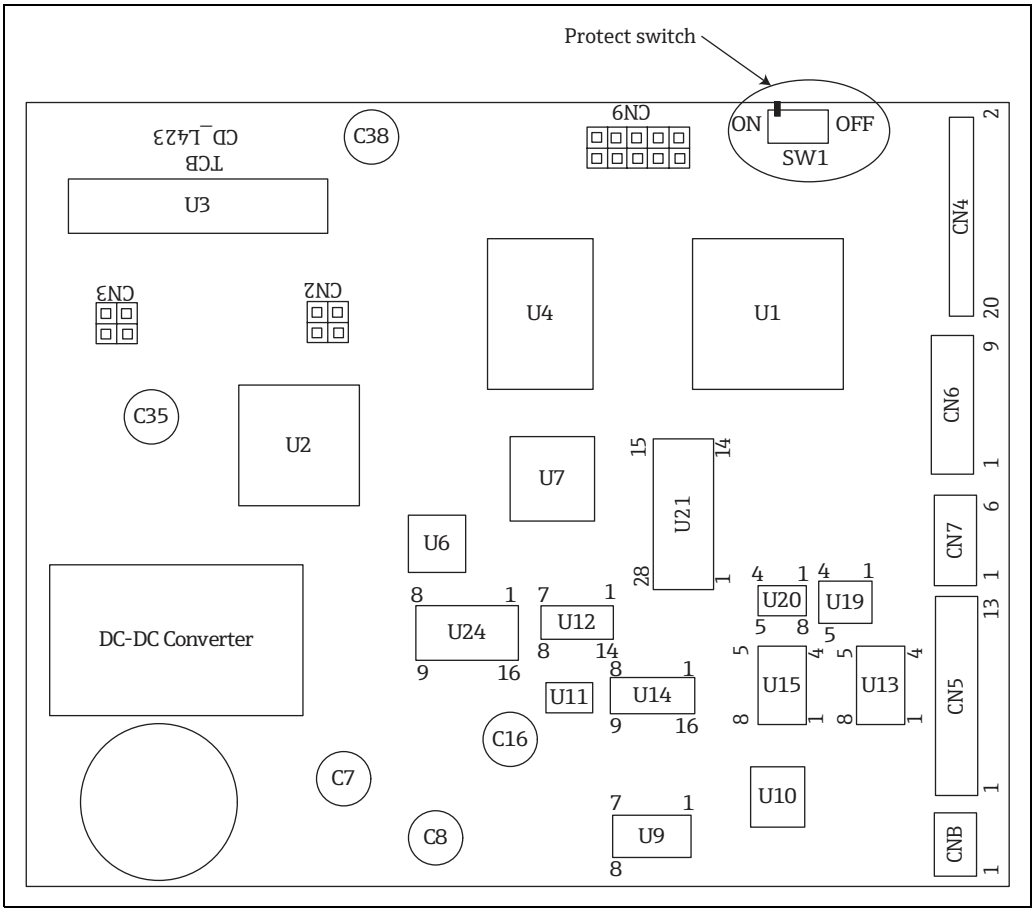

Figure 77: Printed circuit board TCB

9 Maintenance

NMS5 measuring instrument requires no special maintenance.

9.1 Exterior cleaning

When cleaning the exterior of measuring devices, always use cleaning agents which will not cause corrosion or other damage to the housing surface seals.

9.2 Seals replacement

NMS5 O-rings may need to be replaced periodically, and more frequently in extreme climates. The period between changes will depend on climate severity, ambient temperatures and process.

9.3 Repairs

The Endress+Hauser repair policy is based on the fact that the measuring devices have a modular design and that customers are able to undertake repairs themselves. Spare parts are contained in corresponding kits along with their related replacement instructions. Endress+Hauser provides spare parts for repairs of NMS5. Contact Endress+Hauser service representatives for further assistance regarding service and spare parts.

9.4 Repairs to Ex-approved devices

When performing repairs on Ex-approved devices, note the following:

- Repairs of Ex-approved devices may only be performed by trained personnel or by Endress+Hauser Service.
- Comply with the prevailing standards, national Ex-area regulations, safety instructions (XA) and other relevant rules.
- Only use original spare parts provided by Endress+Hauser.
- When ordering spare parts, note the device information on the nameplate. Replace parts only with parts that have the same device information.
- Perform repairs according to the instructions. When completing repairs, perform the specified routine test on the device.
- Only Endress+Hauser service representatives may convert a certified device into a different certified variant.
- Document all repair work and conversions.

9.5 Replacement

After replacing NMS5 or electronic module, the adjustment of a new sensor is required.

10 Accessories

10.1 Calibration chamber

NHC4HP: high pressure version
NHC4LP: low pressure version
The following figure shows dimensions of NHC4LP, 10K 150A RF, SUS304 version. For the other specifications, contact Endress + Hauser representatives.

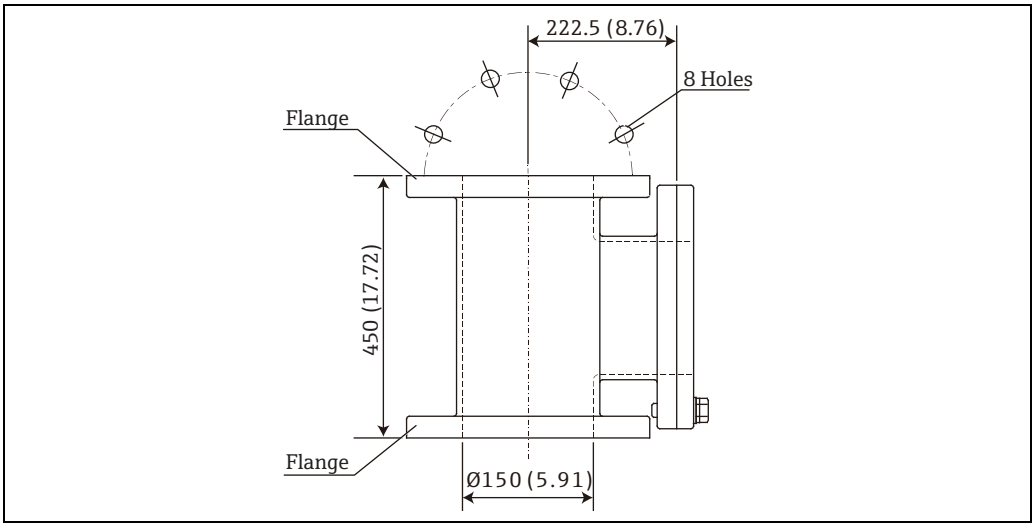

Figure 78: Calibration chamber, unit of measurement: mm (in)

10.2 Power and control switch

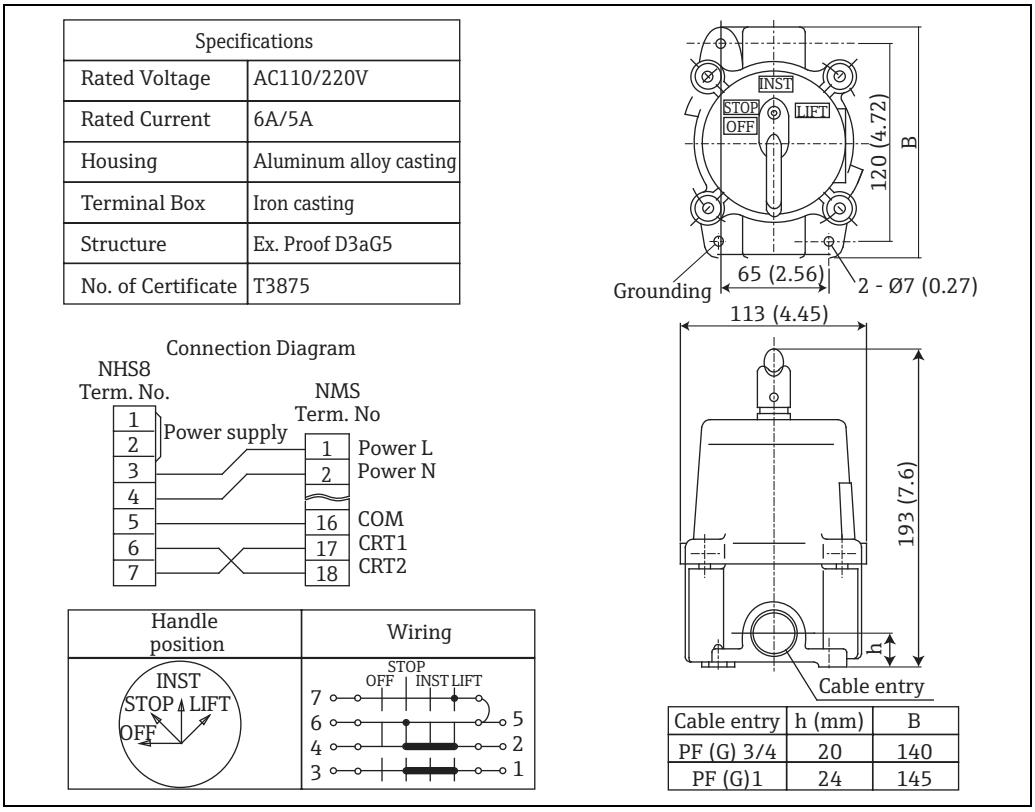

Figure 79: Power and Control Switch NHS8, Unit of Measurement: mm (in)

10.3 Ball valve NHV4A

NHV4A: Standard ball valve with ASME flanges
NHV4J: Standard ball valve with JIS flanges
The following figure shows dimensions of NHV4J, 10K 150A RF, SUS304 version. For the other specifications, contact Endress + Hauser representatives.

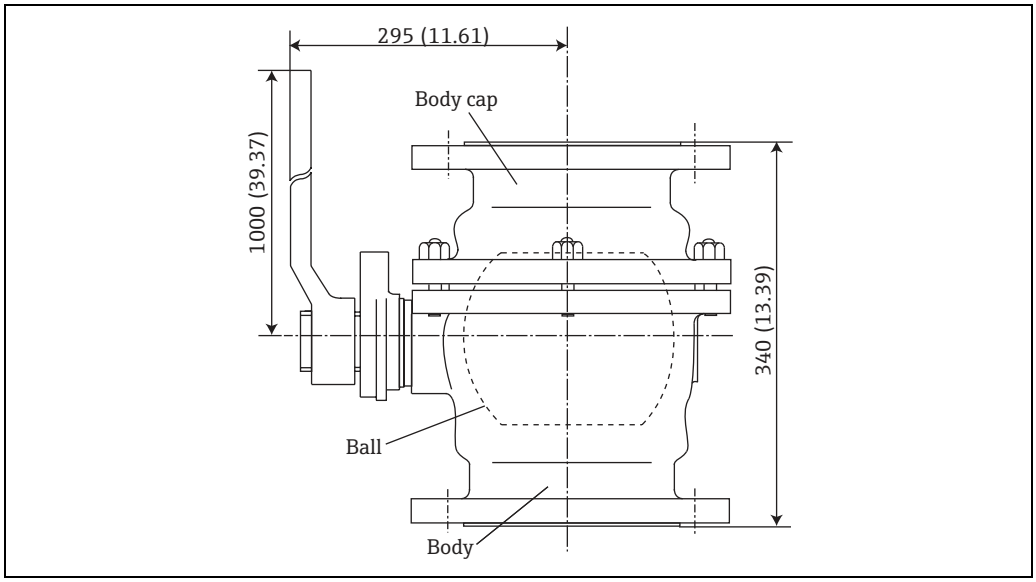

Figure 80: Ball Valve, Unit of Measurement: mm (in)

10.4 Reducing flange NHF4

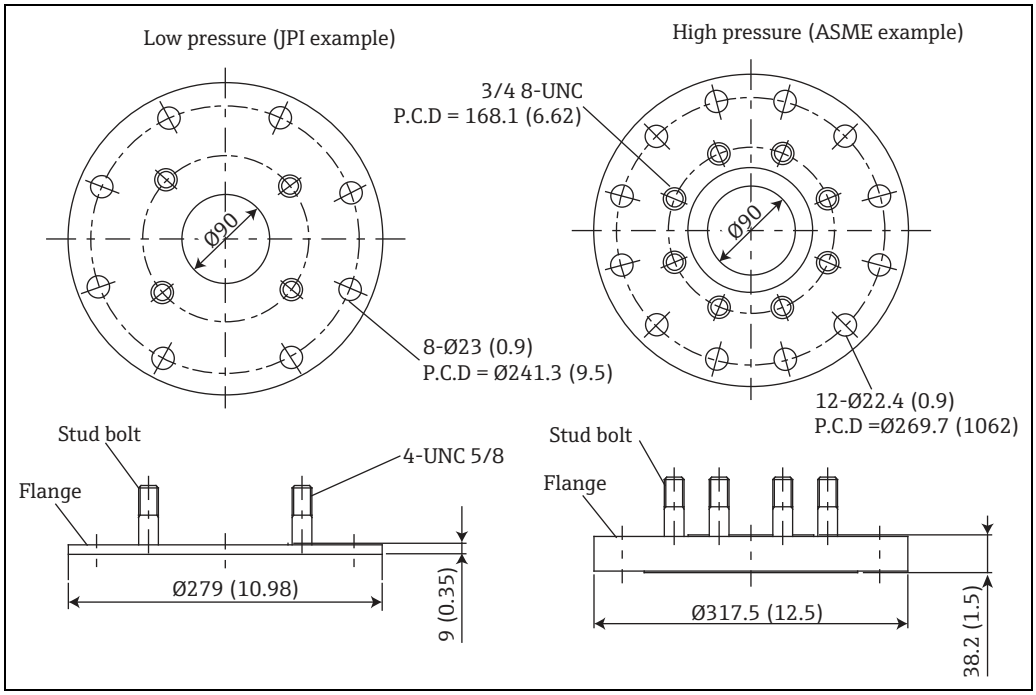

Figure 81: Reducing flange, unit of measurement: mm (in)

11 Diagnosis and troubleshooting

NMS5 has a superb self-diagnosis function which monitors its operation. If an error is occurred, the corresponding message is displayed on the LCD. The selected matrix position and the error message are displayed every few seconds alternatively. Data can be accessed while the selected matrix position is displayed. The error messages are stored in the memory of NMS5. Matrix position GVH037 provides the diagnostic history.

11.1 Selection of diagnostic code and history

Item	Procedure	Remark
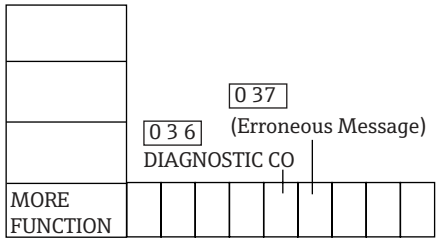 Figure 82: Static matrix 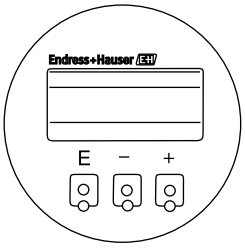 Figure 83: Touch control	1. On "MORE FUNCTION" , select item GVH036 "DIAGNOSTIC CO." 2. Previous static matrix records are sequentially displayed in Static Matrix screen GVH037, starting with the latest record. Up to 100 alarm records can be saved. If the number of records exceeds 100, it is sequentially over-written starting with the oldest record. For example, 973192238 2402 means that an error occurred at 22:38 on March 19, 1997, when the instrument temperature was 24 °C and this is the second error since NMS5 was installed. Display includes the year, month, day, hour, minute, instrument temperature, and an error sequential number, in this order.	▪ Item GVH037 only shows error message, calendar, and pointer, but no label on the LCD.

11.2 Error and status messages

Message	Cause	Remedy	Error Code
-49.5 °C	Indication of shorted element in NMT temperature sensor	Check GVH450 through GVH459 to see element.	
358.0 °C	Element is not enabled, or not installed in NMT temperature sensor .	Check GVH482 Total number of elements	
359.0 °C	Indication of open element in NMT temperature sensor	Check GVH450 through GVH459 to see element.	
ADC/SENSOR ERROR	The signal from the A/D converter is out of range.	Consult E+H Service.	107
ADJ. XXXCOUNTER (X=A, I, Z or combination)	Error of level data check by A, I, and/or Z phase encoder.	If the message appears frequently, then consult E+H Service.	
A PHASE NO INPUT	The input of the A phase signal from the encoder is not available.	Replace the detector unit. Consult E+H Service.	122
BELOWBOT. POINT	Indicates NMS displacer position is below lowest of NMT temperature sensor.		
DEVICE ERROR: DEV 1 (or 2)	The HART device 1 (or 2) gives an error signal.	Check the HART device 1 (or 2) .	130, 131
DEVICE ERROR: NMT	NMT53x gives an error signal.	Check the connection of NMT53x. Check the register of the temperature sensor at position GVH362 "CONNECTION NMT."	250
DEVICE ERROR: NMT	NMT53x temperature sensor is not available.	Check NMT53x. Error messages are available in NMT53x manual.	233
DEVICE ERROR: NRF	NRF560 gives an error signal.	Check NRF560. Error messages are available in NRF560 manual.	240
DISPL CALIB ERROR	The deviation of automatic weight calibration exceeds its set limit.	Check build-up or deposit on the displacer.	120
ELEM 0 RANGE OVER	Indicates the reference resistance element (°C) on NMT electronics is out-of- tolerance.		
IMPOSSIBILITY	Operation is impossible because there is no weight table.		
LOCAL ERROR: DEV1 (or 2)	NMS5 cannot access the local HART device 1 (or 2).	Check the connection of the HART device to NMS5. Check the registration of the device(s) in matrix group G5/6.	232
LOCAL ERROR: NMT	The signal from NMT53x temperature sensor is not available.	Check the connection of NMT53x. Check the register of the temperature sensor at position GVH362 "CONNECTION NMT."	111
LOCAL ERROR: NRF	NMS5 cannot access NRF 560.	Check the connection of NRF560 and register of the tank side monitor at position GVH361 "CONNECTION NRF."	113
MINTENANCE	GVH157 Service Mode = ON	Set GVH157 = OFF	199
MEM. ERROR	Defect in the memory that is specially used for custody transfer sealing.	Replace the CPU board. Consult E+H Service.	201
MPU RESET	Power to the CPU module fell below minimum value.		
MPU: START ACT*	Power to NMS5 was turned OFF/ON.	If the message occurs frequently, then consult E+H Service.	
OVERTENSION	The tension on the measuring wire exceeds the upper limit set at position GVH162 "OVER TENS. SET."	Check if the displacer motion is blocked by clogging or sticking. To release overtensioning, access position GVH371 "RELE. OVER TENS."	101
POWER FAILURE	The supply voltage falls below the allowed value.	Check the power source.	124

Message	Cause	Remedy	Error Code
RAM FAILURE	CPU RAM failure		
ROM ERROR	EEPROM	Consult E+H Service.	132
SIFA ERROR	Error between communication board and CPU board for digital output.	Replace the CPU board. Consult E+H service.	114
TEMP BELOW RANGE	Indicates the measured temperature data is below the fixed range of the NMT temperature sensor.		
TEMP COM OPEN	Indicates an open common line in the NMT temperature sensor		
TEMP COM SHORT	Indicates a shorted common line in the NMT temperature sensor		
TEMP OVER RANGE	Indicates the measured temperature data is higher than the fixed range of the NMT temperature sensor.		
UNDERTENSION	The tension on the measuring wire falls below the lower limit set at position GVH163 "UNDER TENS. SET."	Check if the measuring wire is cut or the displacer is lost. In this case, check the installation of the NMS5.	102
WIRE CALIB ERROR	The deviation of automatic wire calibration exceeds its set limit.	Check wire and wire drum.	115
Z PHASE NO INPUT	The input of the Z phase signal from the encoder is not available.	Replace the detector unit. Consult E+H Service.	106, 112
MPU:XXXX* (XXXX=text)	CPU error	The error might happen occasionally and might be registered in GVH037 (Erroneous Message). However, it is normally negligible. If it occurs frequently, then consult E+H Service.	
OPE.CODE ERROR	An illegal operation command is accessed.	If the message occurs frequently, then consult E+H Service.	
LCD CHECK	Error between LCD (touch control) unit and CPU board for digital output.	Replace the touch control.	121
GAUGE TEMP.	The temperature inside the gauge exceeds the limit.	Check if the ambient temperature stays within the limit. If the application is a high temperature tank, then take measures to avoid heat transfer from the tank to NMS5.	
DRIVER ERROR	A motor driver error has occurred	Consult E+H Service	



These error histories are available (Erroneous Message) at position GVH037.

11.3 Alarm history display

Item	Procedure	Remarks
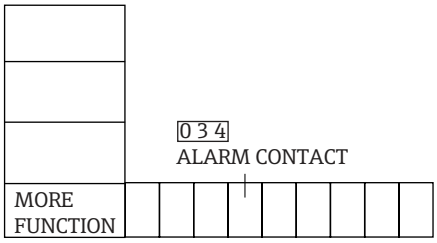 Figure 84: Device data 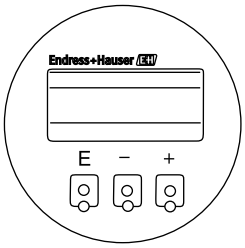 Figure 85: LCD (Display)	1. Bring up Static Matrix GVH034 (ALARM CONTACT)."	
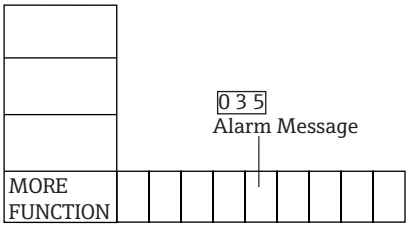 Figure 86: Static matrix	2. Previous static matrix records are sequentially displayed in Static Matrix screen GVH035, starting with the latest record. ▪ Up to 100 alarm records can be saved. If the number of records exceeds 100, it is sequentially overwritten starting with the oldest record. ▪ The display includes the year, month, day, hour, minute, instrument temperature, and an error sequential number, in this order. For example, 97 3192238 2402 means that an error occurred at 22:38 on March 19, 1997, when the instrument temperature was 24 °C and this is the second error since NMS5 was installed.	

11.4 List of alarm messages

Message	Cause of alarm
UPPER LIMIT LEVEL	The level has risen above the set alarm operation value.
LOWER LIMIT LEVEL	The level has fallen below the set alarm operation value.
UPPER LIMIT TEMP.	The temperature has risen above the set alarm operation value.
LOWER LIMIT TEMP.	The temperature has fallen below the set alarm operation value.

11.5 Flowcharts for diagnostics and troubleshooting

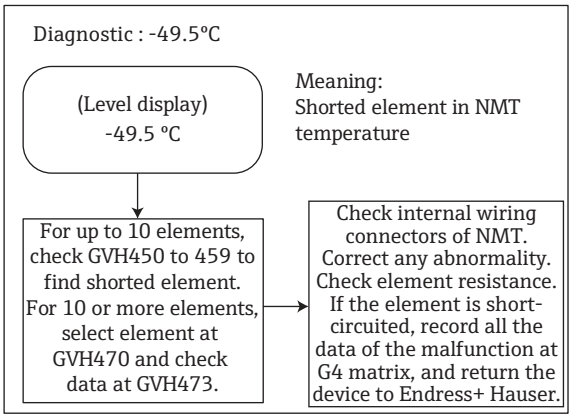

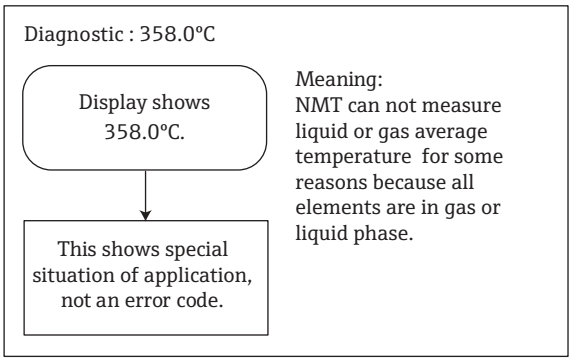

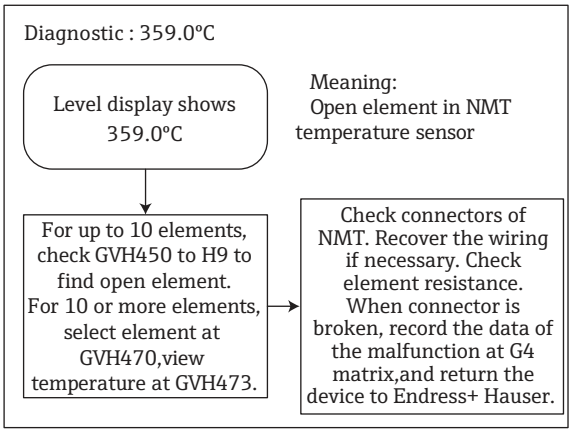

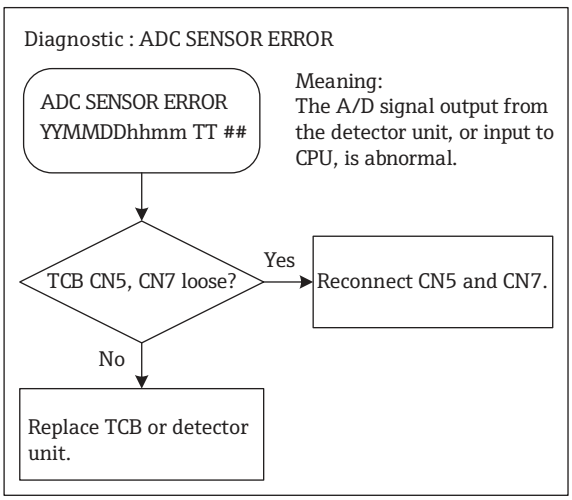

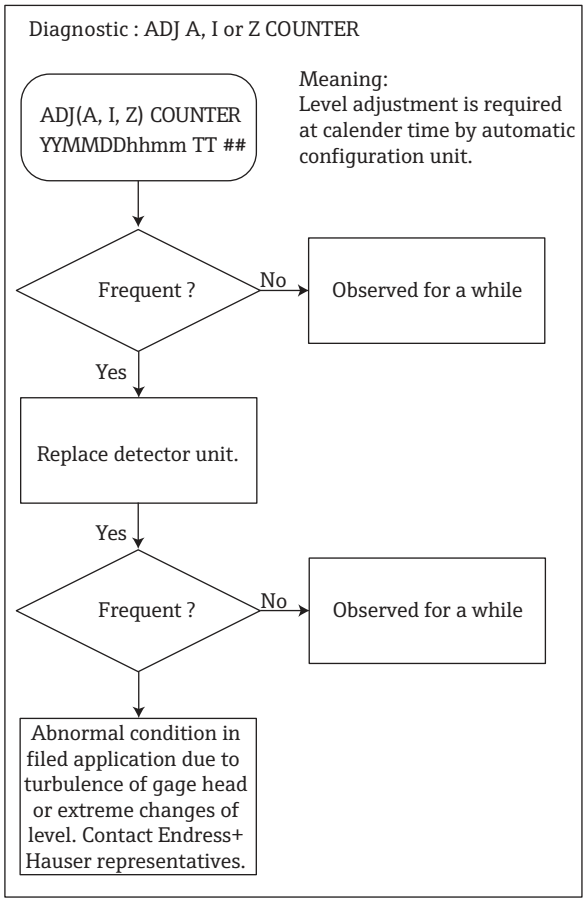

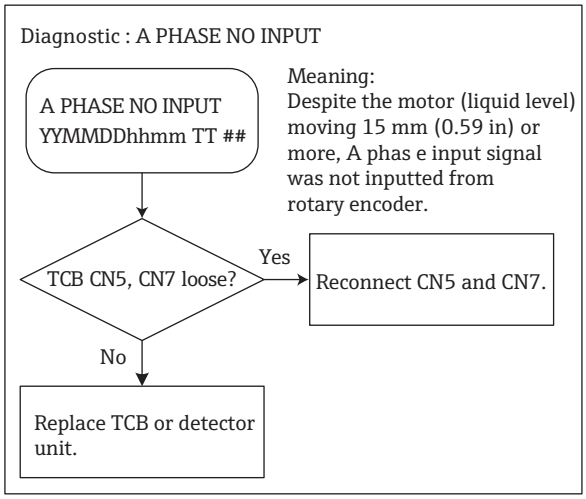

Diagnostic : BELOW BOT. POINT

Display shows 358.0°C.

Meaning:
Liquid level is positioned at the lowest point. Due to below the element, temperature can not be measured.

SW v 4.20 or Later ?

Yes → Set GVH498 = ON Error is reset and temperature shows 3580°C.

No → Adjust position data of the lowest element at GVH486 in the range of 0 to 500 mm (19.69 in). This prevents error occurrence when the level is low; however, it might cause detection of gas temperature so that liquid temperature may not always be correctly measured.

⚠ CAUTION

If displacer position goes lower than (Elem 0 position + GVH486), BELOW BOT. POINT will display.

Diagnostic : DEVICE ERROR: DEV1 (2)

Device error: DEV1 or 2

Measuring:
An error arose in HART device and HART fails to function.

Refer to operating manual of HART device.

Diagnostic : DEVICE ERROR: NMT

Device Error: NMT

Meaning:
An error arose in NMT temperature sensor.

Check current error code at GVH480. Check previous error. Refer to operating manual of NMT for details of error.

Diagnostic : DEVICE ERROR : NRF

Device Error: NRF

Meaning:
An error arose in NRF tank side monitor.

Refer to operating manual of HART device.

Diagnostic : DISPL CALIB ERROR

Data is flashing

Meaning:
Displacer weight exceeds allowable range, which disable measuring temperature.

Foreign matter at displacer ?

Yes → Clean displacer, wire, wire, and drum. Adjust hall sensor. Perform weight calibration.

No → Increase setting value at GVH185, calibrate hall sensor, or perform weight calibration.

Diagnostic : ELEM 0 RANGE OVER

Element 0 Range Over

NMT module connector OK?

No → Reconnect NMT module.

Yes → Record temperature data matrix and replace module.

Diagnostic : IMPOSSIBILITY

Impossible Operation

Meaning:
Operation is impossible due to invalid weight table.

Adjust hall sensors. Perform weight calibration.

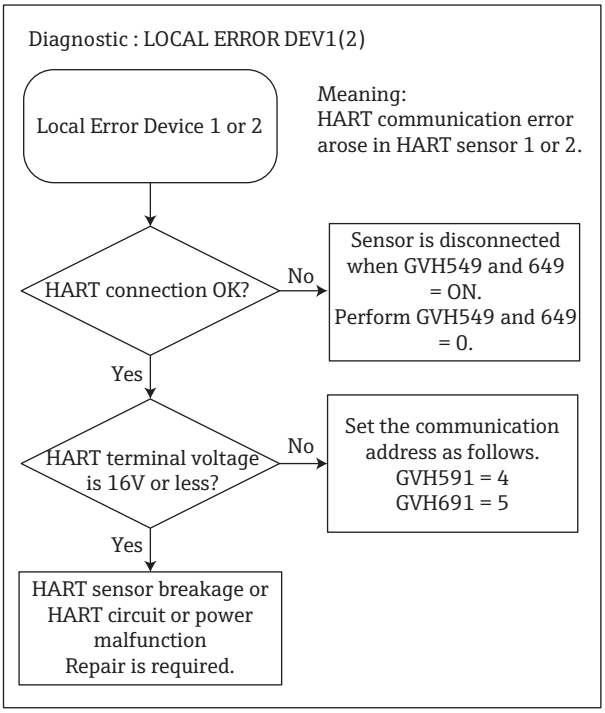
Diagnostic : LOCAL ERROR DEV1(2)
Local Error Device 1 or 2
Meaning:
HART communication error arose in HART sensor 1 or 2.
HART connection OK?
No
Sensor is disconnected when GVH549 and 649 = ON.
Perform GVH549 and 649 = 0.
Yes
HART terminal voltage is 16V or less?
No
Set the communication address as follows.
GVH591 = 4
GVH691 = 5
Yes
HART sensor breakage or HART circuit or power malfunction
Repair is required.

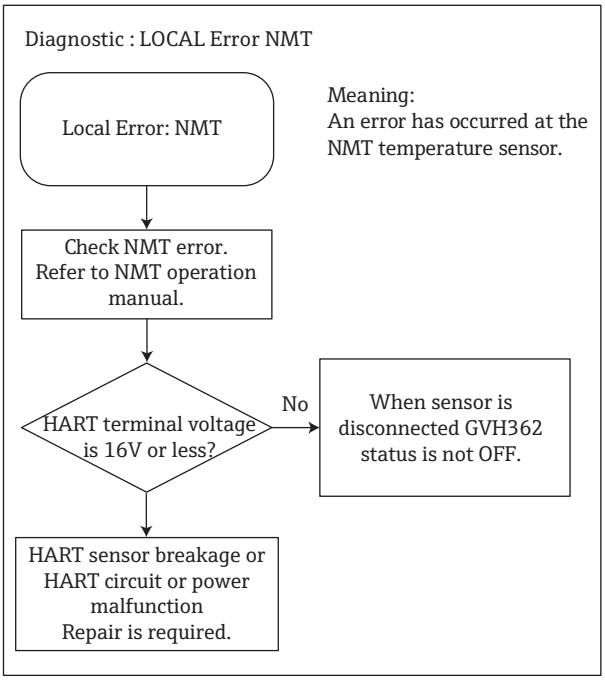
Diagnostic : LOCAL Error NMT
Local Error: NMT
Meaning:
An error has occurred at the NMT temperature sensor.
Check NMT error.
Refer to NMT operation manual.
HART terminal voltage is 16V or less?
No
When sensor is disconnected GVH362 status is not OFF.
HART sensor breakage or HART circuit or power malfunction
Repair is required.

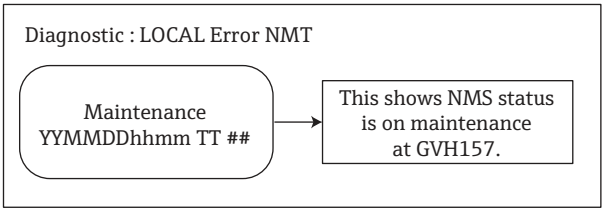
Diagnostic : LOCAL Error NMT
Maintenance
YYMMDDhhmm TT ##
This shows NMS status is on maintenance at GVH157.

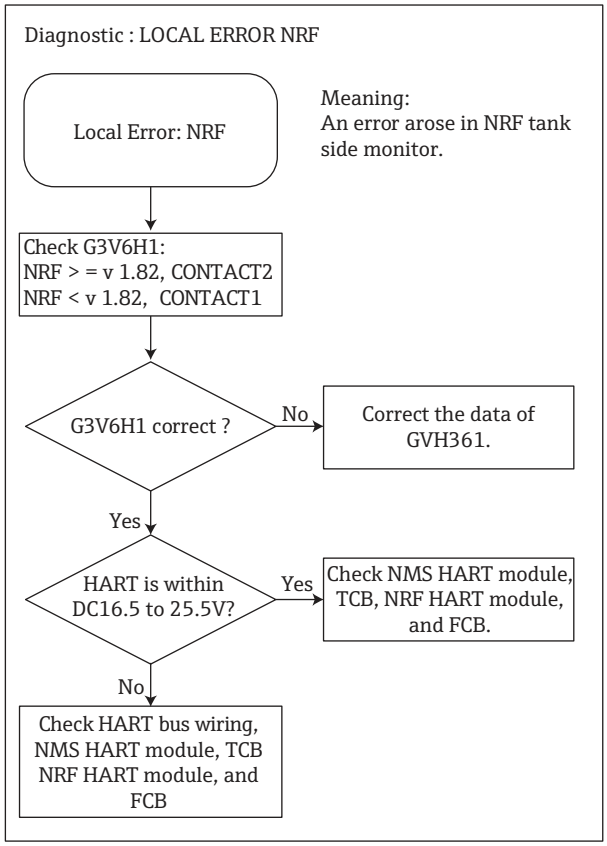
Diagnostic : LOCAL ERROR NRF
Local Error: NRF
Meaning:
An error arose in NRF tank side monitor.
Check G3V6H1:
NRF > = v 1.82, CONTACT2
NRF < v 1.82, CONTACT1
G3V6H1 correct ?
No
Correct the data of GVH361.
Yes
HART is within DC16.5 to 25.5V?
Yes
Check NMS HART module, TCB, NRF HART module, and FCB.
No
Check HART bus wiring, NMS HART module, TCB NRF HART module, and FCB

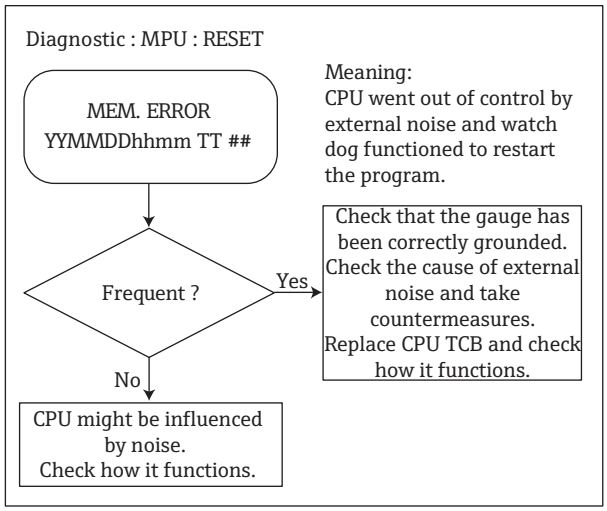
Diagnostic : MPU : RESET
MEM. ERROR
YYMMDDhhmm TT ##
Meaning:
CPU went out of control by external noise and watch dog functioned to restart the program.
Frequent ?
Yes
Check that the gauge has been correctly grounded.
Check the cause of external noise and take countermeasures.
Replace CPU TCB and check how it functions.
No
CPU might be influenced by noise.
Check how it functions.

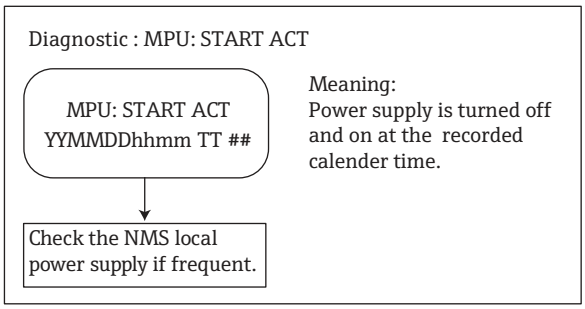
Diagnostic : MPU: START ACT
MPU: START ACT
YYMMDDhhmm TT ##
Meaning:
Power supply is turned off and on at the recorded calender time.
Check the NMS local power supply if frequent.

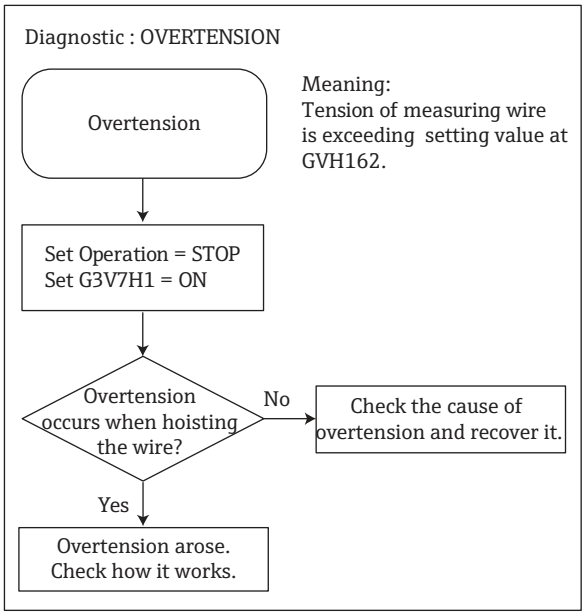
Diagnostic : OVERTENSION
Overtension
Meaning:
Tension of measuring wire is exceeding setting value at GVH162.
Set Operation = STOP
Set G3V7H1 = ON
Overtension occurs when hoisting the wire?
No
Check the cause of overtension and recover it.
Yes
Overtension arose.
Check how it works.

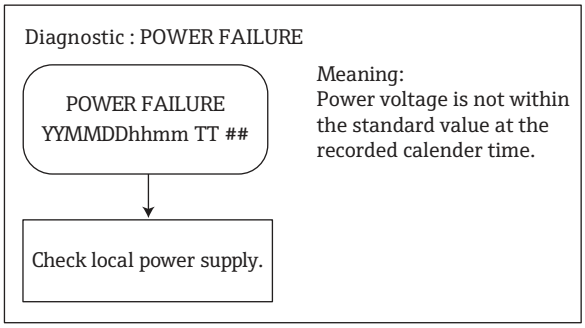
Diagnostic : POWER FAILURE
POWER FAILURE
YYMMDDhhmm TT ##
Meaning:
Power voltage is not within the standard value at the recorded calender time.
Check local power supply.

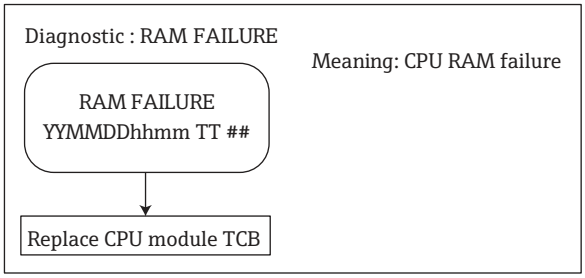
Diagnostic : RAM FAILURE
Meaning: CPU RAM failure
RAM FAILURE
YYMMDDhhmm TT ##
Replace CPU module TCB

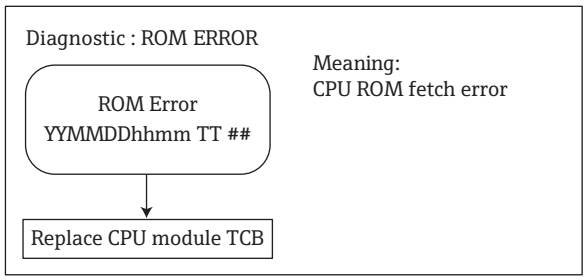
Diagnostic : ROM ERROR
Meaning:
CPU ROM fetch error
ROM Error
YYMMDDhhmm TT ##
Replace CPU module TCB

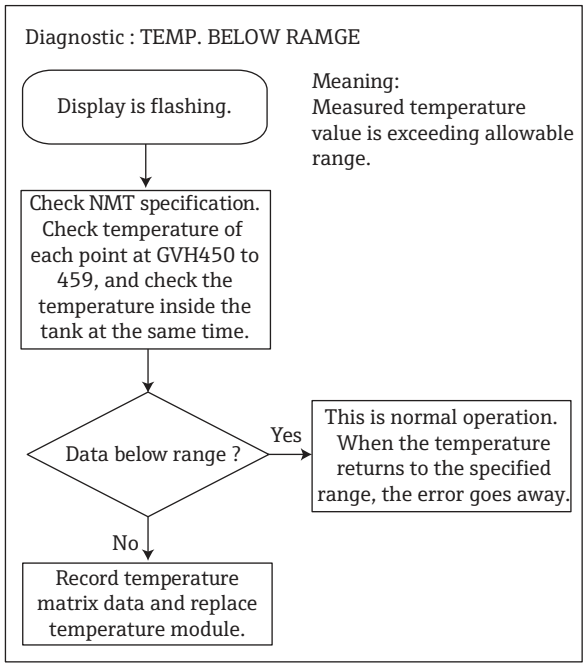
Diagnostic : TEMP. BELOW RAMGE
Display is flashing.
Meaning:
Measured temperature value is exceeding allowable range.
Check NMT specification. Check temperature of each point at GVH450 to 459, and check the temperature inside the tank at the same time.
Data below range ?
Yes
This is normal operation. When the temperature returns to the specified range, the error goes away.
No
Record temperature matrix data and replace temperature module.

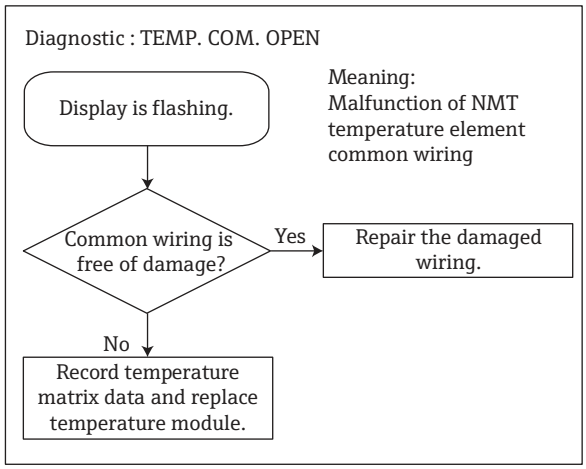
Diagnostic : TEMP. COM. OPEN
Display is flashing.
Meaning:
Malfunction of NMT temperature element common wiring
Common wiring is free of damage?
Yes
Repair the damaged wiring.
No
Record temperature matrix data and replace temperature module.

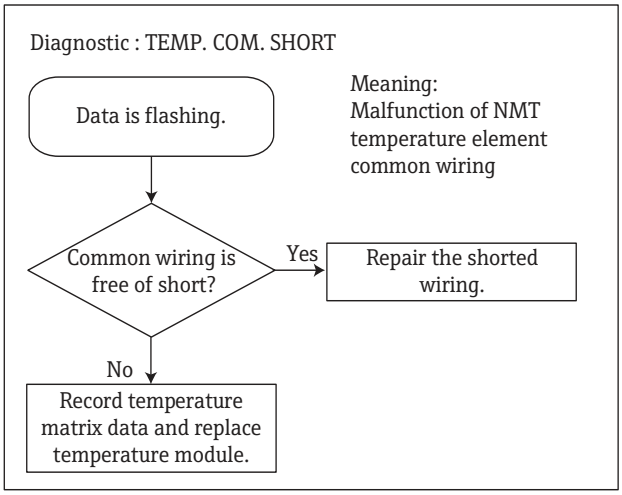
Diagnostic : TEMP. COM. SHORT
Data is flashing.
Meaning:
Malfunction of NMT temperature element common wiring
Common wiring is free of short?
Yes
Repair the shorted wiring.
No
Record temperature matrix data and replace temperature module.

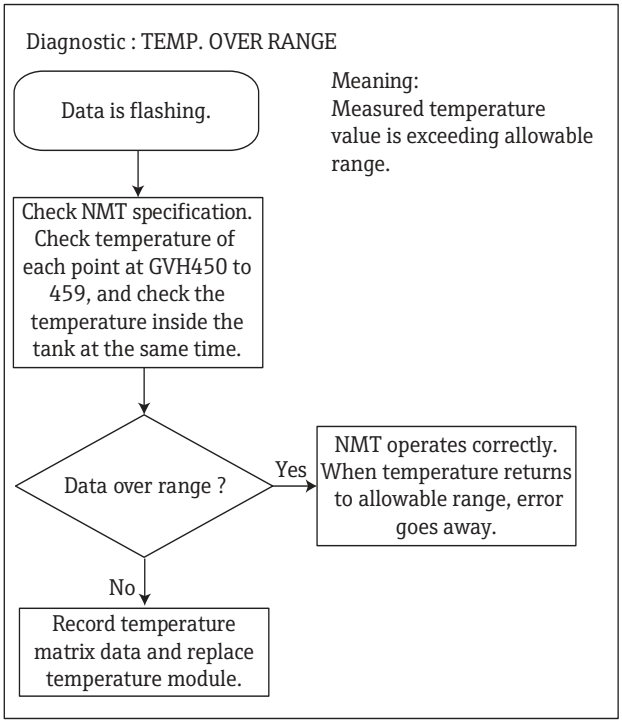
Diagnostic : TEMP. OVER RANGE
Data is flashing.
Meaning:
Measured temperature value is exceeding allowable range.
Check NMT specification. Check temperature of each point at GVH450 to 459, and check the temperature inside the tank at the same time.
Data over range ?
Yes
NMT operates correctly. When temperature returns to allowable range, error goes away.
No
Record temperature matrix data and replace temperature module.

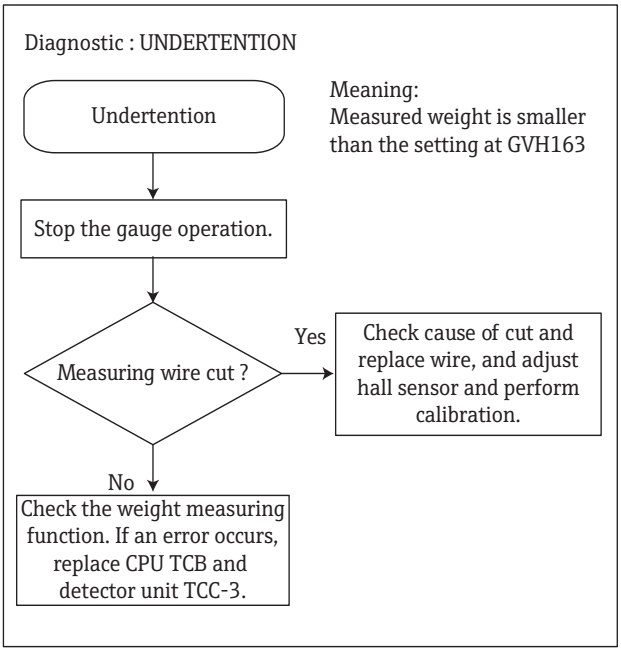
Diagnostic : UNDERTENTION
Undertention
Meaning:
Measured weight is smaller than the setting at GVH163
Stop the gauge operation.
Measuring wire cut ?
Yes
Check cause of cut and replace wire, and adjust hall sensor and perform calibration.
No
Check the weight measuring function. If an error occurs, replace CPU TCB and detector unit TCC-3.

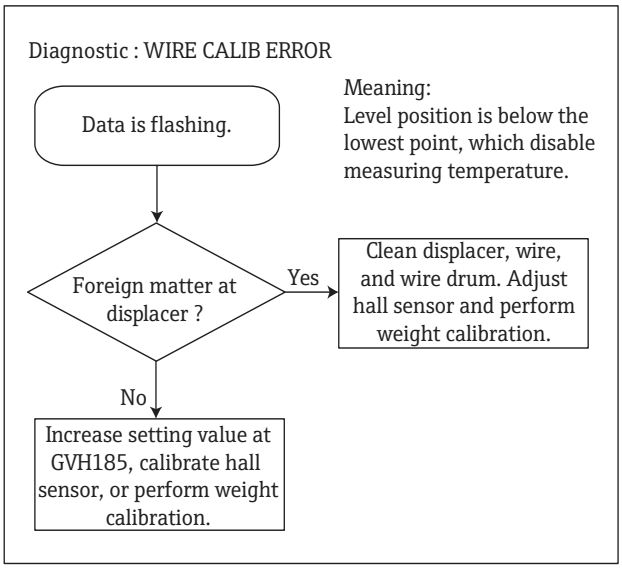
Diagnostic : WIRE CALIB ERROR
Data is flashing.
Meaning:
Level position is below the lowest point, which disable measuring temperature.
Foreign matter at displacer ?
Yes
Clean displacer, wire, and wire drum. Adjust hall sensor and perform weight calibration.
No
Increase setting value at GVH185, calibrate hall sensor, or perform weight calibration.

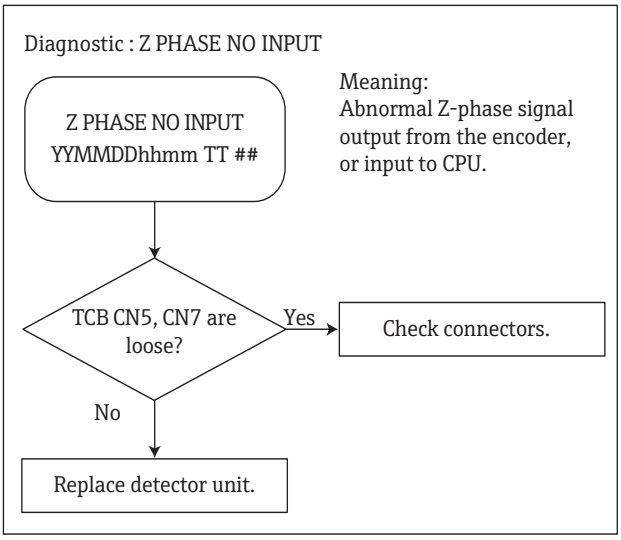
Diagnostic : Z PHASE NO INPUT
Z PHASE NO INPUT
YYMMDDhhmm TT ##
Meaning:
Abnormal Z-phase signal output from the encoder, or input to CPU.
TCB CN5, CN7 are loose?
Yes
Check connectors.
No
Replace detector unit.

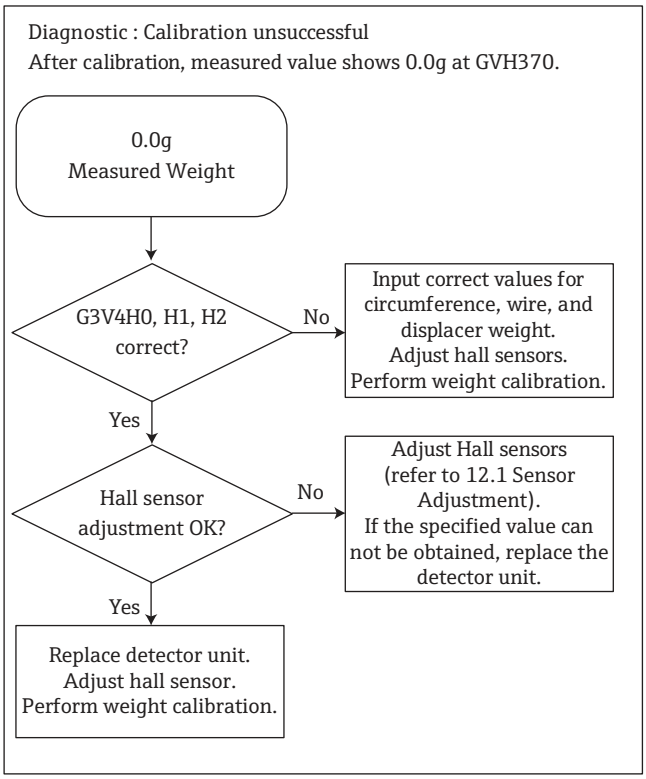
Diagnostic : Calibration unsuccessful
After calibration, measured value shows 0.0g at GVH370.
0.0g
Measured Weight
G3V4H0, H1, H2 correct?
No
Input correct values for circumference, wire, and displacer weight.
Adjust hall sensors.
Perform weight calibration.
Yes
Hall sensor adjustment OK?
No
Adjust Hall sensors (refer to 12.1 Sensor Adjustment).
If the specified value can not be obtained, replace the detector unit.
Yes
Replace detector unit.
Adjust hall sensor.
Perform weight calibration.

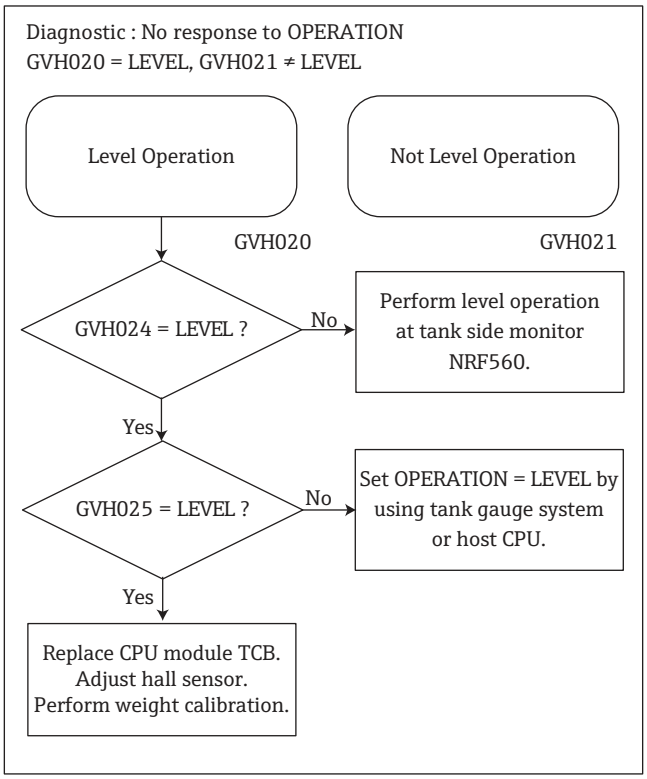
Diagnostic : No response to OPERATION
GVH020 = LEVEL, GVH021 ≠ LEVEL
Level Operation
Not Level Operation
GVH020
GVH021
GVH024 = LEVEL ?
No
Perform level operation at tank side monitor NRF560.
Yes
GVH025 = LEVEL ?
No
Set OPERATION = LEVEL by using tank gauge system or host CPU.
Yes
Replace CPU module TCB.
Adjust hall sensor.
Perform weight calibration.

11.6 Setting after parts replacement

After any part of NMS5 is replaced, and before starting NMS5 calibration, specify the data on the following equipment.

- Circumferential length of wire drum (indicated on face of wire drum)
- Weight of displacer (indicated on the body of the displacer)
- Volume of displacer (indicated on the body of the displacer)
- Balance volume (indicated on the body of the displacer or 50% of volume)
- Density of measured liquid (up to three phases)
- Height of tank with NMS5 mounted on it (refer to Section "8 Commissioning").

Item	Procedure	Remarks
Matrix group: SERVICE	1. In Static Matrix "MORE FUNCTION" bring up GVH030 "MATRIX OF" and select "SERVICE. 2. Select Dynamic Matrix GVH340 "WIRE DRUM CIRC." Check whether the displayed value is equal to the value marked on the wire drum. ▪ If not, adjust the displayed value.	▪ Set the access code at 51.
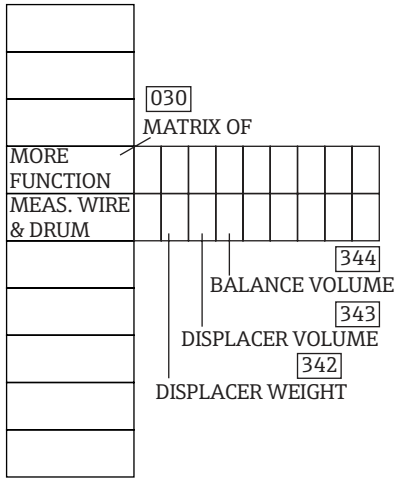 Figure 87: Dynamic matrix. 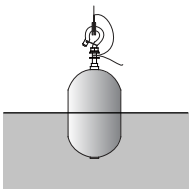 Figure 88: Displacer	3. Select the Dynamic Matrix screen GVH341. 4. Set Dynamic Matrix GVH342 "DISPLACER WEIGHT" at the value marked on the displacer. 5. Set Dynamic Matrix GVH343 "DISPLACER VOLUME" to the value marked on the displacer. 6. Set Dynamic Matrix GVH344 "BALANCE VOLUME" at half the value set in "DISPLACER VALUME." "This setting is provided to the approximate position of the displacer when it becomes 7. stationary in the liquid. ▪ The weight and volume of the displacer are marked on its bottom ▪ The balance volume is the volume of that part of the displacer that is immersed in the liquid when the displacer is balanced in the liquid.	▪ For calculation methods of the draft position.

11.7 Intelligent function

11.7.1 Maintenance prediction function

The history of maintenance is displayed at matrix screen GVH265 (Parts Overused Date) LCD screen displays the following contents.

- Total operation time for parts managed according to this value
- Total number of rotations of the wire drum for parts managed according to this value

	Reference part management value	
Display	Part	Reference (conducting time/ number of rotations)
1) POWER UNIT	Power supply unit	43,800 hours (about 5 years)
2) DISPLAY UNIT	LCD indicator	61,300 hours (about 7 years)
3) MOTOR UNIT	Motor/driver unit	43,800 hours (about 5 years)
4) WIRE UNIT	Measuring wire	240,000 rotations
5) BEARINGS UNIT	Drum bearing metal	145,000 rotations
6) SHAFT UNIT	Drum shaft	240,000 rotations

11.8 Return

The measuring device must be returned if repairs or a factory calibration are required, or if the wrong measuring device has been ordered or delivered. According to legal regulations, Endress+Hauser, as an ISO-certified company, is required to follow certain procedures when handling returned products that are in contact with medium. To ensure swift, safe and professional device returns, please read the return procedures and conditions on the Endress+Hauser website at www.services.endress.com/return-material

11.9 Disposal

Observe the following notes during disposal:

- Observe valid federal/national regulations.
- Ensure proper separation and reuse of the device components.

11.10 Software History

Software Version / Date	Software Changes	Documentation Changes
V2.13, from 9.96	Original Release	BA001N/08/en/09.98
V2.20, from 10.97	T2:TCB-2, Modified V1: R&S command	BA001N/08/en/11.97
V4.06, from 04.98	HART master, T4:TCB-4	
V4.06, from 04.98	HART master T&W, T4:TCB-4	
V4.08X, from 08.98	upper stop speed reduction 3-step	
V4.20, from 08.98	WM550, Commuwin II display, elem. Error fix	BA001N/08/en/12.99
V4.20, from 09.98	T&W	BA001N/08/en/12.99
V4.22, from 05.00	HART line selection add to static matrix: gas temp. minus data remote communication level 6 digit data processing memory clear volume calculation matrix deleted	
V4.23B, from 09.00	standard release, alarm output modify, NMT level selection	
V4.24, from 04.01	standard release	BA001N/08/en/03.01
V4.24 OSP, from 06.01	Over Spill protection	
V4.24T&W, from 07.01	T&W spec.	
V4.24 T2, from 02.02	TCB-2 CPU, NMT, V1 level measurement	
V4.25, from 09.02	Density profile function	BA001N/08/en/02.02
V4.27, from 09.04	Level hold matrix, Error display on Home screen only	BA001N/08/en/11.04
V4.27 T6/T&O, from11.05	W&M and Overspill prevention	BA001N/08/en/03.06
V4.27 A, from 05.07	standard release	
V4.27 B, from 09.08	standard release	BA1001N/08/en/12.08
V4.27 C, from 04.09	Proactive Safety function	BA1001N/08/en/04.09
V4.27 E, from 03.10	DTM support	BA00401G/08/en/ 01.11
V4.27 F, from 05.11	SIL	BA00401G/08/en/ 02.11
V4.27 G, from 05.12	4-20mA long range support	BA00401G/08/en/ 03.13
V4.27G1, from 04.15	Extend density measurement range. Enable 4-20 mA output assignment on upper I/F measurement. Send the gauge status code "1: Reference" on Modbus protocol.	BA00401G/08/en/ 07.15
V4.27G2, from 03.16	NMT HART retry number setting function	BA00401G/08/en/ 08.16

12 Adjustment

12.1 Sensor calibration

After exchanging CPU module, detector unit, wire drum, measuring wire (all or part), it is necessary to adjust the hall sensors and make new weight table calibration.

1. Move the displacer to the side of calibration window or the maintenance chamber window (top of the tank) or put the displacer on a work bench so that the displacer can be touched.

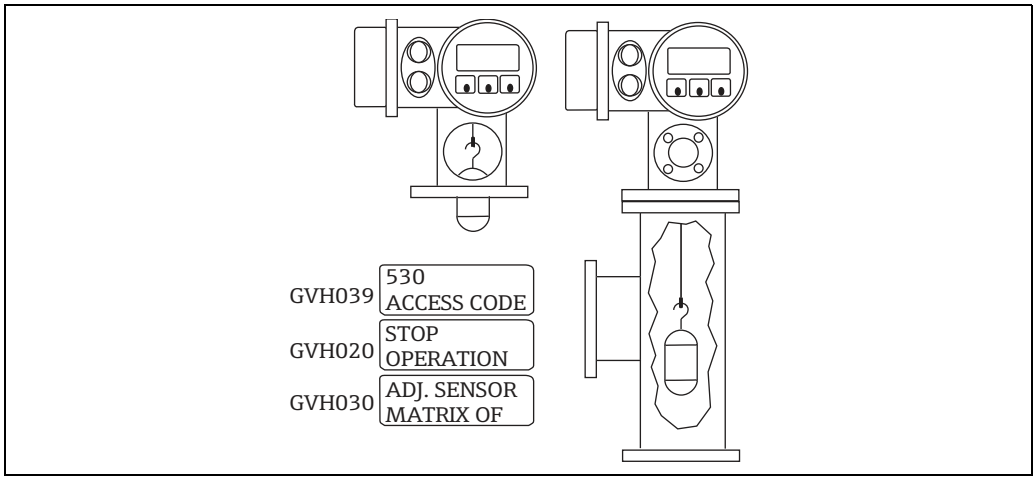

Figure 89: Sensor calibration 1

2. Confirm that NMS5 is level and no vibration or other disturbance occurred.
3. Set access code to 530 at GVH039.
4. Set operation command to STOP at GVH020.
5. Select ADJ.SENSOR at GVH030.
6. Record sensor count (Wa2) at GVH741.

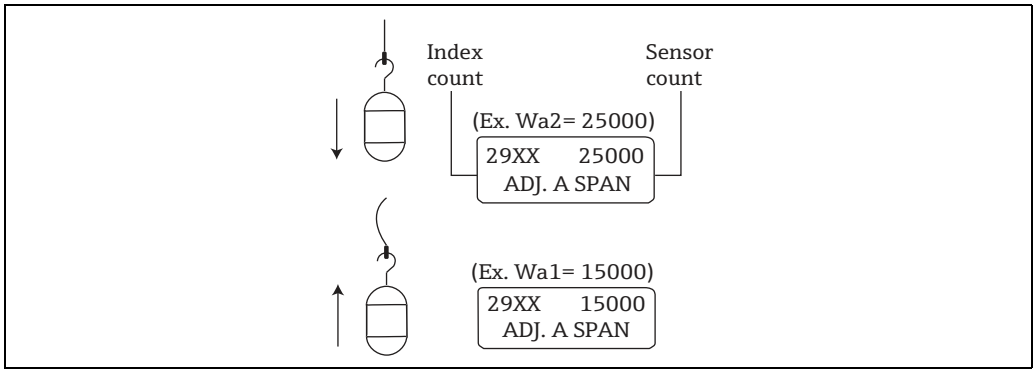

Figure 90: Sensor calibration 2

WARNING

Do not let wire fall off the wire drum.

7. Lift the displacer so that the weight of the measuring wire shows 0 until the sensor count is stable and record the value of sensor count (Wa1). Use the following formula to get the difference between Wa2 and Wa1.
   - $|Wa2 - Wa1| = 10000\ (+/-100)$?
8. If Yes, go to step 7 "GVH740 A Zero".

9. If No, return the displacer to the original position at GVH741
   - If |Wa2 - Wa1 |<9900, increase Index Count.
   - If |Wa2 - Wa1 |>11000, decrease Index Count.
   - Repeat the procedure above until |Wa2 - Wa1 | = 10000 (+/-100).
10. Adjust A Zero Sensor Count = 21000 (+/-100) at GVH740.

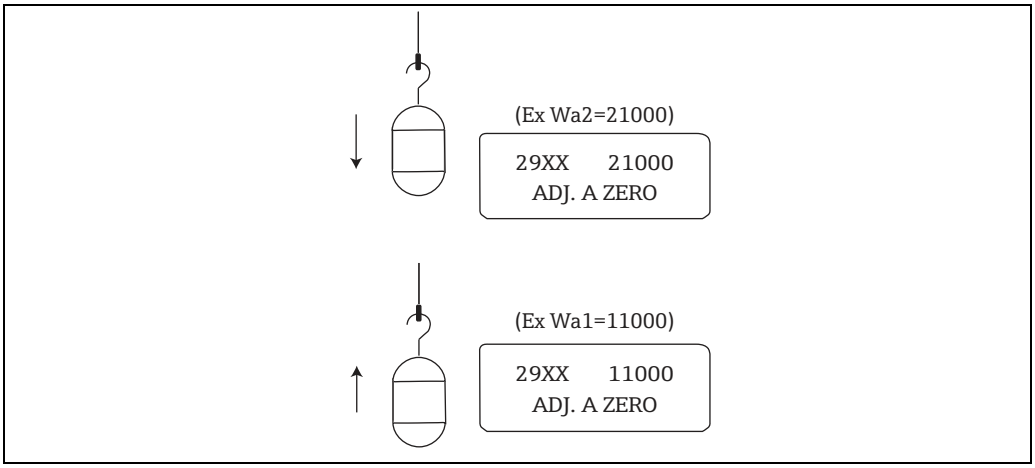

Figure 91: Sensor calibration 3

11. Record the value of sensor counter (Wa2)
12. Lift the displacer until the sensor count is stable and record the value of sensor count (Wa2) as in Step 7.
    - |Wa1 - Wa2 | = 10000 (+/-100)?
13. If yes, go to step 12. "GVH743 B Span".
14. If not, repeat steps 6 to 12.
15. Set B Span to |Wa2 - Wa1|=10000 (+/-100) at GVH743 with Steps 6 to 9.

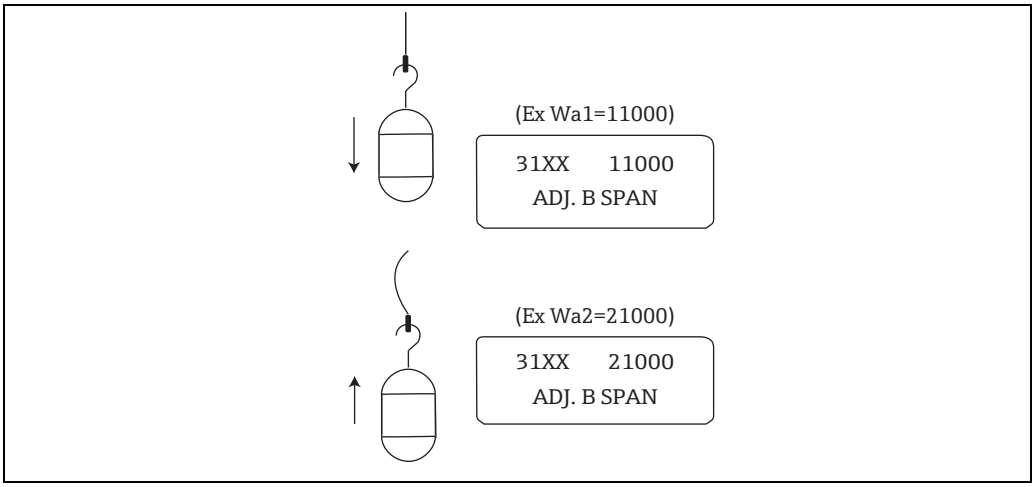

Figure 92: Sensor calibration 4

16. Adjust B Zero Sensor Count = 11000 (+/- 100) at GVH742.
17. Adjust to |Wa2 - Wa1| = 10000 (+/-100) at GVH42.

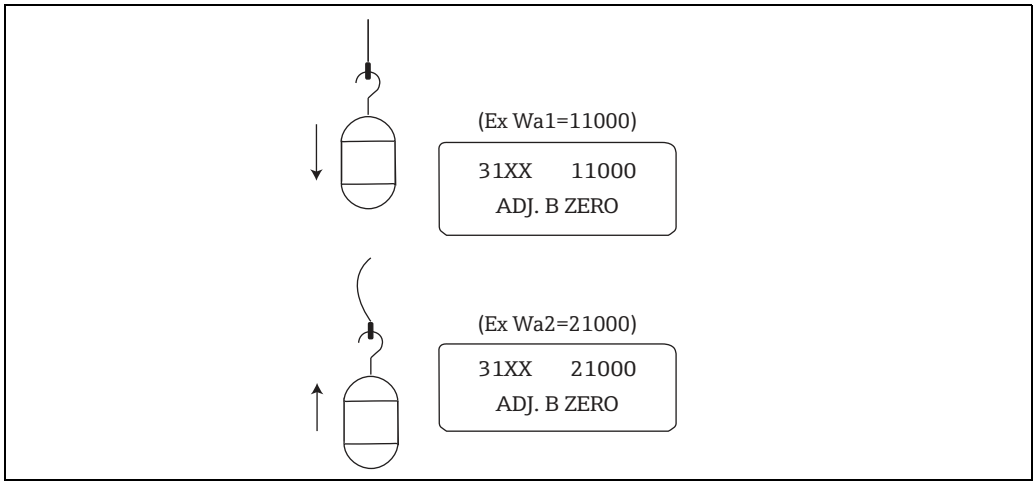

Figure 93: Sensor calibration 5

This completes the hall sensor adjustment.

12.2 Weight calibration

Weight table calibration must be done after completing hall sensor adjustment. The calibration procedures will vary depending on the measurement specifications. When NMS5 is only for level measurement, use 12.2.1 Weight Calibration (Standard) procedure. When NMS5 is for level, density, and interface measurement, use 12.2.2 Weight Calibration (Density) procedure.

12.2.1 Weight calibration (Standard)

⚠ CAUTION
Make sure that wind and vibration may affect weight table calibration.
It is not necessary to perform weight calibration for Startup "All-in-one" (displacer attached) shipments.

Item	Procedure	Remark
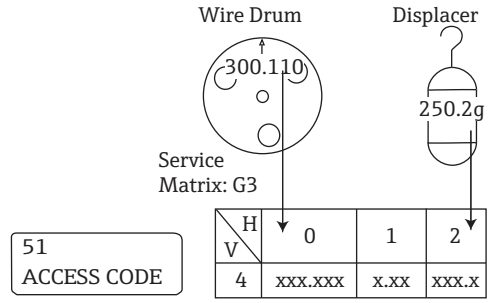 Figure 94: Calibration 1-A	1. Enter Access Code 51 at GVH039. 2. Confirm the following status. GVH340 wire drum circumferential (engraved on wire drum), GVH341 wire weight standard SUS = 2.50 PFA=4.55, and GVH342 displacer weight (engraved on displacer) 3. Confirm each engraved data in the wire drum and the displacer and values in Matrix are the same. 4. If the matrix data is different from the engraved data, input the engraved value at Matrix.	
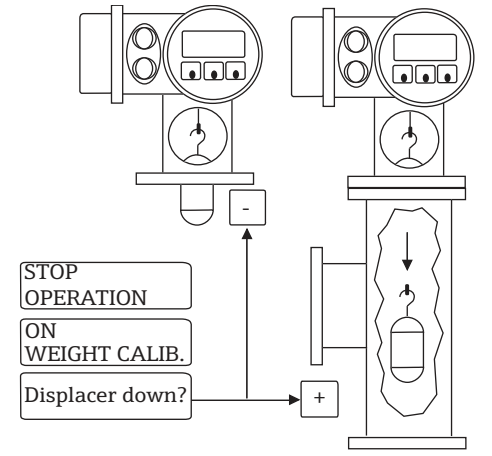 Figure 95: Calibration 2-A	5. Select STOP at GVH020. 6. Set the value of 0.0 at GVH379. 7. Select ON at GVH373. ▪ NMS5 automatically move the displacer up and down and perform the calibration, and stops. 8. Enter No "-" at "Displacer Down? +/-" for calibration window. ▪ When inputing "-" displacer stop current position. When inputting "+", displacer moves down to 300mm and stops.	▪ Displacer moves at calibration window or maintenance chamber position.
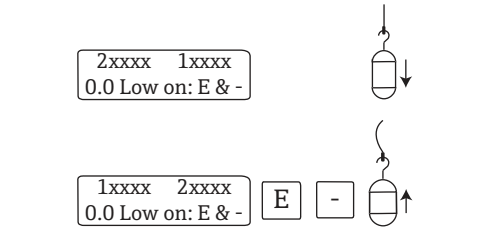 Figure 96: Calibration 3-A	9. Lift the displacer until Sa and Sb are stable. Press "E" and "-" keys at the same time. 10. Return the displacer to the original position.	
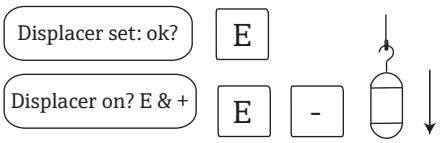 Figure 97: Calibration 4-A	11. Press "E" at "Displacer set ok?". 12. Press "E" and "+" keys together at "Displacer on: E & +".	▪ Calibration automatically starts, which takes approximately 10 minutes.

Item	Procedure	Remark
 Figure 98: Calibration 5-A	13. GVH373 "Weight Calibration" shows OFF 14. Check the weight calibration at GVH370=GVH342 +/- 2.0 grams? 15. If not, adjust sensor or calibrate the weight again.	▪ Always enter N = -.

12.2.2 Weight calibration (Density)

Item	Procedure	Remark
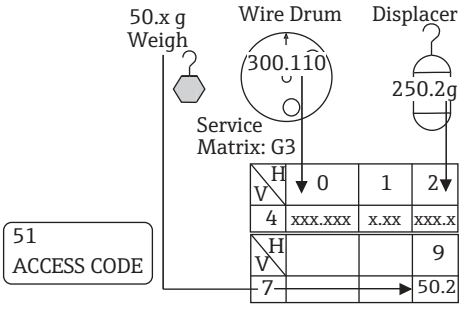 Figure 99: Calibration 1-B	1. Set Access Code to51 at GVH039. 2. Confirm the following status. GVH340 wire drum circumferential (engraved on wire drum), GVH341 wire weight standard SUS = 2.50 PFA=4.55, and GVH342 displacer weight (engraved on displacer) 3. Confirm each engraved data in the wire drum and the displacer and values in Matrix are the same. 4. If the matrix data is different from the engraved data, input the engraved value at Matrix.	
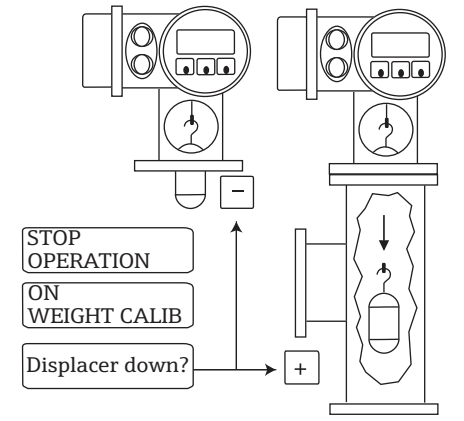 Figure 100: Calibration 2-B	5. Select STOP at GVH020. 6. Set the value of 50.2g (test weight) at GVH379. 7. Select ON at GVH373. ▪ NMS5 automatically move the displacer up and down and perform the calibration, and stops. 8. Enter No "-" at "Displacer Down? +/-" for calibration window. 9. When inputing "-" displacer stop current position. When inputting "+", displacer moves down to 300mm and stops.	▪ Displacer moves at calibration window or maintenance chamber position.
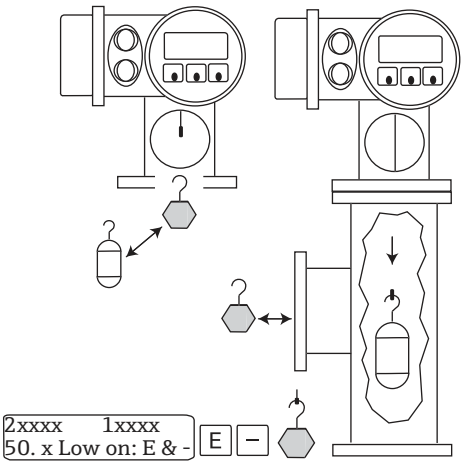 Figure 101: Calibration 3-B	10. Replace the displacer with 50.2g weight and wait until Sa and Sb are stable. 11. Press "E" and (-) key together.	

Item	Procedure	Remark
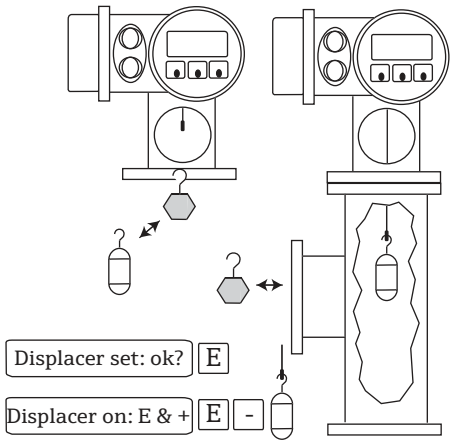 Figure 102: Calibration 4-B	12. Remove the 50xg wight from the displace and mount the displacer on the wire. 13. Press "E" at Displacer set: ok?. 14. Press "E" and "+" keys together at "Displacer on: E & "+".	▪ Calibration starts automatically, which takes approximately 10 minutes.
 Figure 103: Calibration 5-B	15. OFF is displayed at WEIGHT CALIB. of GVH373. 16. Check GVH370 = GVH342 +/- 2.0 grams. 17. If not, adjust sensor or calibrate the weight again.	▪ Always enter N = -.

13 Technical data

Items	Descriptions
Measuring Range	0 to 16, 22, 26, 36, or 47m depending on material specification (47m or more can be ordered depending on conditions.)
Density Limits	0.430 to 2.000 g/cm^3 (g/ml) (430 to 2000 kg/m^3)
Accuracy	Level: +/- 0.7mm (0.027 inch)*1 Interface: +/- 2.7mm (0.106 inch)*2 Density: +/- 0.005 g/cm^3 *3
Sensitivity	+/- 0.1mm (0.004 inch)
Resolution	+/- 0.1 mm (0.004 inch)
Self-diagnostic Function	CPU system health, measuring wire tension, communication, gauge status, level data input, etc
Input/Output	Refer to "2.2 Ordering Information" .
Motion Delay	0 to 9.9 seconds (configurable in 100 milliseconds steps)
Power	85 to 264 VAC, 50/60 Hz 20 to 62 VDC, or 20 to 55 VAC, 50/60Hz
Power Consumption	Maximum 50 VA / 50 W
Surge Protection	Standard supply
Ambient Temperature	-20 to 60 ºC (-4 to 140ºF) -40 to 60 ºC (-40 to 140ºF) ATEX approval cold temperature version
Liquid Temperature	-200 to +200ºC (-328 to +392ºF)
Displacer Speed	Max. 2500mm/min
Display	Backlight LCD, level, temperature, status, diagnostics, menu-navigation, in English, Japanese and Chinese
Operation	Local operation by optical display keypad, external contact
Calibration	Optical display keypad for tank level and sensor adjustment by automated software routine
Weight	12kg (Aluminum drum housing NMS5-1, 5-4) 27kg (Stainless steel drum housing NMS5-2, 5-5, 5-6)
Degree of Protection	IP67 / NEMA4X
Ex Approval	Waterproof and Dustproof , IP67 NEMA 4X TIIS Ex d IIB T4 FM XP Cl. I Div. 1 Gr. C-D FM XP-AIS Cl. I Div.1 Gr. C-D CSA Cl. I Div. 1 Gr. C-D CSA Ex d[ia] Cl. I Div. 1 Gr. C-D ATEX II 1/2G Ex d IIB T6-T3 ATEX II 1/2G Ex d IIC T6-T3 ATEX II 1/2G Ex d IIB T6-T3, -40°C ATEX II 1/2G Ex d (ia) IIB T6-T3 ATEX II 1/2G Ex d (ia) IIB T6-T3, -40°C IEC Ex d ia IIB T6-T3 Ga/Gb IEC Ex d IIB T6-T3 Ga/Gb IEC Ex d IIC T6-T3 Ga/Gb IEC Ex d ia IIB T6-T3 Ga/Gb, -40°C IEC Ex d IIB T6-T3 Ga/Gb, -40°C NEPSI Ex d ia IIB T6-T3 NEPSI Ex d IIB T6-T3 NEPSI Ex d IIC T6-T3 NEPSI Ex d ia IIB T6-T3, -40°C NEPSI Ex d IIB T6-T3, -40°C
Additional Certificates	Weights and Measures for custody transfer : NMi, PTB Overspill prevention : TÜV Nord SIL (Functional Safety Manual): TÜV Nord

Items	Descriptions
Color	Body: blue (RAL5012); Covers: white (RAL7035)
Supplementary Documentation	Technical Information (TI00452G) Installation Instruction (BA00401G) Safety Instruction (XA00578G: ATEX, XA00582G: IECEx EX421-439: FM, EX540-742: CSA, XA10257G: NEPSI) Functional Safety Manual (SD00337G)

*1 Under reference condition
*2 Difference of product densities at least 0.100 g/cm^3(g/ml)
*3 Optional when calibrated for density measurement

14 Matrix

14.1 Programming Matrix

Default Data
Display Text
Changeable parameters, units, etc.
Mode (Code)

NMS53x Programming Matrix (Static Matrix)

GROUP MESSAGE	V \ H	0	1	2	3	4	5	6	7	8	9
MEASURED VALUE 1	0	16000.0 m m MEASURED LEVEL 0.0 - 99999.9 m m Display	0.0 m m ULLAGE LEVEL 0.0 - 99999.9 m m Display	0.0 m m UPPER INTERF. LEV 0.0 - 99999.9 m m Display	0.0 m m MIDD. INTERF. LEV 0.0 - 99999.9 m m Display	0.0 m m BOTTOM LEVEL 0.0 - 99999.9 m m Display	1.000 g/m l UPPER DENSITY 0.000 - 3.000 g/m l Display/Set (50)	1.000 g/m l MIDDLE DENSITY 0.000 - 3.000 g/m l Display/Set (50)	1.000 g/m l DENSITY BOTTOM 0.000 - 3.000 g/m l Display/Set (50)	0.0 m m LEVEL DATA 0.0 - 99999.9 m m Display	
MEASURED VALUE 2	1	0.0 °C LIQUID TEMP. -49.9 - 249.9 °C Display	HART DEVICE(1) Display	HART DEVICE(2) Display	0.0 °C GAS TEMPERATURE -49.9 - 249.9 °C Display	0.0 m m WATER BOTTOM Display			0.0 m m ZERO POINT 0.0 - 99999.9 m m Display	16000.0 m m SPAN 0.0 - 99999.9 m m Display	m m LENGTH UNIT Display
OPERATION	2	STOP OPERATION 16000 See operation com m ands below Select (50)	STOP OPERATING STATUS See status table below Display	UNBALANCED BALANCING STATUS BALANCED / UNBALANCED Display		LEVEL OPERAT. BY NRF Display	LEVEL OPERAT. BY HOST Display			0 DEVICE ID Display	x.xx SOFTWARE VERSION Display
MORE FUNCTION	3	CALIBRATION MATRIX OF Select			xx xxx x:xx:xx CALENDER Current Data Display	NO ALARM ALARM CONTACT Current Data Display	NO ALARM LA 0 0 0 0 Current Data Display	NO ERROR DIAGNOSTIC CODE Current Data Display	xx xxx xxx x x Current Data Display	OFF RESET ALM. DIAGNO	0 ACCESS CODE 0, 50, 51, 530 Set

When new NMS status is selected at GVH=272, new status codes are shown to matrix position GVH=021 as follows;

Code	Meaning	NMS Display
0	No definition	-
1	Displacer at reference position	REFERENCE
2	Displacer hoisting up	UP
3	Displacer going down	DOWN
4	Displacer stop	STOP
5	Level m easurem ent, balanced	LEVEL
6	Upp. I/F level, balanced	UPPER. INTERF.LEV.
7	Midd. I/F level, balanced	MIDD.INTERF.LEV.
8	Bottom m eas. balanced	BOTTOM LEVEL
9	Upper Dens, finished	UPPER DENSITY
10	Middle Dens, finished	MIDDLE DENSITY

Code	Meaning	NMS Display
11	Bottom Dens, finished	DENSITY BOTTOM
12	Release over tension	RELE. OVER TENS.
13	Calibration activated	CAL. ACTIVE
14	Seek level	LEVEL SEEKING
15	Follow level	LEVEL FOLLOWING
16	Seek Upper Density	UPP. DEN. SEEKING
17	Seek Middle Density	MID. DEN. SEEKING
18	Seek Density Bottom	BOT. DEN. SEEKING
19	Seek Upper I/F level	UPP. INT. SEEKING
20	Follow up. I/F level	UPP. INT. FOLLOWING
21	Seek Mid. I/F level	MID. INT. SEEKING

Code	Meaning	NMS Display
22	Follow Mid. I/F level	MID. INT. FOLLOWING
23	Seek Bottom Level	BOTTOM SEEKING
24	Not initialised	NO INITIALIZE
25	Stopped at High Stop.	UPPER STOP
26	Stopped at Low Stop	LOWER STOP
27	Repeatability testing	REPEATABILITY
28	Seeking water level	WATER SEEKING
29	Water level, balanced	WATER LEVEL
30	Follow water level	WATER FOLLOWING
31	Over-/Under tension, Z-Phase, ADC error	EMARGENCY ERROR
32	Maintenance Mode (GVH157) = ON	"MANT" "MAINTENANCE"

Operation commands (Commands. Text)

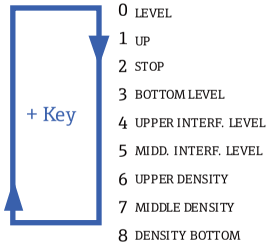

0 LEVEL
1 UP
2 STOP
3 BOTTOM LEVEL
4 UPPER INTERF. LEVEL
5 MIDD. INTERF. LEVEL
6 UPPER DENSITY
7 MIDDLE DENSITY
8 DENSITY BOTTOM
9 REPEATABILITY
10 WATER DIP

NMS53x Programming Matrix (Dynamic Matrix, Calibration: G1)

GROUP MESSAGE	V \ H	0	1	2	3	4	5	6	7	8	9
LEVEL DATA	4	16000.0 mm TANK HEIGHT 0.0 - 99999.9 mm Set (50)	0.0 mm DIP POINT OFFSET -99999.9 - 99999.9 mm Set (50)	10.0 mm DISPLAC. DRAFT 0.0 - 999.9 mm Set (50)	150 mm DISPL. RAISE DENS 0 - 300 mm Set (51)	150 mm DISPL.SUBM DENS. 0 - 1500 mm Set (51)	0.000 g/ml OFFSET UP DENS. MAX.. 0.200 g/ml Set (50)	0.000 g/ml OFFSET MID.DENS. MAX 0.200 g/ml Set (50)	0.000 g/ml OFFSET BOT.DENS. MAX. 0.200 g/ml Set (50)	5 CUT DOWN DIG. NUM. FOR V1 5 ROUND UP 5 ROUND OFF Set (50)	99999 mm LEVEL BELOW 0 0.0 - 99999.9 mm Set (51)
CALIBRATION	5	16000.0 mm SET LEVEL 0.0 - 99999.9 mm Set (50)		0.0 mm TANK CORRECT LEV 0.0 - 99999.9 mm Set (51)	0.000 mm/m TANK CORRE. COEF 0.000 - 59.999 mm/m Set (51)	OFF SAFE DENSITY ON IGNOR Set (51)	300.0 mm DEN.OPE.LEVEL 0.0 - 99999.9 mm Set (51)		OFF SERVICE MODE ON OFF Set (530)	ON PRO SAFETY ON OFF Set (530)	99999.0 mm SAFETY LEVEL 0.0 - 99999.0 mm Set (530)
ADJUSTMENT	6	16000 mm UPPER STOP 0.0 - 99999.9 mm Set (50)	0 mm LOWER STOP 0.0 - 99999.9 mm Set (50)	350 g OVER TENS.SET 0 - 999 g Set (51)	50 g UNDER TENS.SET 0 - 999 g Set (51)	60 mm SLOW HOIST 60 - 1800 mm Set (51)	10 mm DISPL.RAIS.REP. 10-99 mm Set (51)	10 s DISPL.WAIT REP. 10-999 s Set (51)	10 s DISPL.WAIT DIP 10-999 s Set (51)		
AUTO WIRE CALIB.	7										
AUTO CALIB.DISPL	8										
DISPLAY	9	MEASURED LEVEL SELECT DISP.MODE ULLAGE LEVEL MEASURED Select (51)	ENGLISH LANGUAGE JAPANESE CHINESE Select (51)	▮▮▮▮▮▮▮▮▮▮▮▮ LCD CONTRAST 0 - 15 Set (51)	1 YEAR SETTING 00 - 99 Current year Set (51)	2 MONTH SETTING 0 - 12 Current month Set (51)	15 DAY SETTING 0 - 31 Current day Set (51)	13 HOUR SETTING 0 - 23 Current hour Set (51)	59 MINUTE SETTING 0 - 59 Current minute Set (51)	[.] SELECT DECIMAL , Select (51)	OFF LCD CHECK ON Select (51)

NMS53x Programming Matrix (Dynamic Matrix, Device Data: G2)

GROUP MESSAGE	H / V	0	1	2	3	4	5	6	7	8	9
CONTACT OUTPUT	4	1 SELECT. RELAY 1 - 4 Select (50)	NONE ASSIGN RELAY LELVEL, LIQUID TEMP CAUTION, WARNING EMEARGENCY ERROR BALANCE SIGNAL Select (50)	HIGH RELAY FUNCTION LOW Select (50)	0 mm / 0 °C SWITCHING POINT 0 - 99999 mm -999 - 999 °C	0 mm / 0 °C HYSTERISIS 0 - 99999 mm -999 - 999 °C Set (50)	NORMAL OPENED RELAY ON ALARM NORMAL CLOSED Select (50)	0 s ON DELAY TIME 0 - 999 s Set (50)	0 s OFF DELAY TIME 0 - 999 s Set (50)	-1 SIM. RELAY OUT 1 - 4 Set (50)	
ANALOG OUT.ADJUST	5	NONE ASSIGN OUTPUT 1 LEVEL LIQUID TEMP. UPPER.INTERF.LEV Select (51)	0 mm / 0 °C ADJUST 4mA 0 - 99999 mm -999 - 999 °C Set (51)	0 mm / 0 °C ADJUST 20mA 0 - 99999 mm -999 - 999 °C Set (51)	NONE ASSIGN OUTPUT 2 LEVEL LIQUID TEMP. UPPER.INTERF.LEV Set (51)	0 mm / 0 °C ADJUST 4mA 0 - 99999 mm -999 - 999 °C Set (51)	0 mm / 0 °C ADJUST 20mA 0 - 99999 mm -999 - 999 °C Set (51)	OFF DEVICE AT ALARM HOLD CURNT.OUT MAX MIN Select (51)	-1% SIM. CURRENT OUT Up to 100% Set (50)	0 CH1 ADJ. ZERO Max. 9999 Set (50)	0 CH2 ADJ. ZERO Max. 9999 Set (50)
PARTS DATA	6	1 PARTS NUMBER 1 - 10 Set (51)	NONE PARTS TYPE POWER UNIT DISPLAY, MOTOR WIRE, BEARINGS SHAFT Select (51)	OPERATION HOUR MAINTEN. FACTOR DRUM REVOLT. Select (51)	1hour / 1 round MAINTEN. VALUE 0 - 999999hour Set (51)	0 hour / 0 round OPERATION TIME 0 - 999999hour Set (51)	POWER UNIT PH 0 0 0 Display (51)	NONE REPLACED PARTS POWER UNIT DISPLAY, MOTOR WIRE, BEARINGS SHAFT Select (51)	NONE MH 0 0 0		
INPUT SIGNAL	7	NONE OPE. CONTACT ACTIVATED Select (51)	OFF CUSTODY TRANSFER ON Display (51)	DISABLED NEW NMS STATUS ENABLED Select (51)			x.xx SW VERSION Display (51)	x.xx HW VERSION Display (51)		1.000 g/ml OPE. DENSITY 0 - 3.000 Set (51)	0 OPE. CONT. STATUS 0-15 Display (51)
COMMUNICATION	8	HIGH LEVEL ALARM 1 LOW NONE Select (51)	0.0 mm SET LEVEL ALARM1 0.0 - 99999.9 mm Set (51)	HIGH LEVEL ALARM 2 LOW NONE Select (51)	0.0 mm SET LEVEL ALARM2 0.0 - 99999.9 mm Set (51)	0.0 mm HYSTERISYS 0.0 - 99999.9 mm Set (51)	0 ADDRESS 00 - FF for MIC->FF fixed 1 - 247 Modbus Set (51)	WM550, M/S PROTOCOL BBB, MDP, V1, ENRAF, RACK BUS, HART, MarkSpace, WM550,MODBUS Select (51)	F COMMU. LINE ADJ. 0 - F（Hex） Set (51)	0 COMMUNIC. STATUS Display (51)	0 MODBUS Config 0 - 14 Set (51)
STATUS	9	0 s STATUS 1 DELAY 0 -99 s Set (51)	NONE SELECT CONTACT NORMAL OPENED NORMAL CLOSED (ALARM = CLOSED) (ALARM = OPEN) Select (51)	1 WM550 ALM.SELECT 1 - 4 Select (51)	0 WM550 BSW SELECT 0 - 1 Select (51)	0 WM550 DENS.SEL. 0 - 2 Select (51)	37 WM550 SW_ID_20xx 0 - 99 s Set (51)				5 s BALANCE DELAY 0 -99 s Set (51)

NMS53x Programming Matrix (Dynamic Matrix, Service: G3)

GROUP MESSAGE	H / V	0	1	2	3	4	5	6	7	8	9
MEAS.WIRE & DRUM	4	300.000 mm WIRE DRUM CIRC. 0.000 - 999.999 mm Set (51)	1.40 g/10m WIRE WEIGHT 0.00 - 999.99 g/10m Set (51)	xxx.x g DISPLACER WEIGHT 0.0 - 999.9 g Set (51)	xxx.x ml DISPLACER VOLUME 0.0 - 999.9 ml Set (51)	xxx.x ml BALANCE VOLUME 0.0 - 999.9 ml Set (51)	1.0 ml VOLUME TOLERANCE 0.0 - 99.9 ml Set (51)		20 X 100 mS DELAY 0 - 99 x 100 ms Set (51)	0.00 mm/m DRUM CORRECTION 0.00 - 99.00 mm/m Set (51)	0 count DISPL.HUNT.COUNT 0 - 99 count Set (51)
GAUGE DATA	5	0.0 mm ACTUAL LEVEL Display (530)	0 count ENCODER COUNT Display (530)	OFF NON HYSTER. MODE ON Select (51)	OFF HI. ACCURACY MODE ON Select (51)	0 s HI. ACCR. OPE. TIME 0 - 600 s Set (51)	50 mm HI. ACC. DISP. UP 0 - 300 mm Set (51)	xxx °C GAUGE TEMP. -999 - 999 °C Display (51)			OFF DEFAULT VALUES ON Set (530)
SYSTEM DATA	6	LOCAL : MASTER SENSOR DATA REMOTED COM. ON SOFTWARE = 09.99 HARDWARE=TCB06 GEAR 1:36 NOT OVERSPILL PROTOCOL , LCD Display	OFF CONNECTION NRF CONTACT 1 CONTACT 2 Select (51)	OFF CONNECTION NMT SPOT TEMP. AVERAGE TEMP. Select (51)						IF_LEVEL_SELECT UP_IF_LEVEL WATER BOTTOM WATER BOTTOM2 Select (51)	OFF SOFT RESET ON Select (51)
SERVICE	7	0.0 g MEASURED WEIGHT 0.0 - 999.9 g Display	OFF RELE. OVER TENS ON Select (51)	OFF DRUM SETTING ON Select (51)	OFF WEIGHT CALIBR. ON Select (51)					60 mm DISPL. REFERENCE 0 - 999 mm Set (51)	0.0 g ZERO ADJ. WEIGHT 0.0 - 999.9 g Set (51)
SENSOR VALUE	8	Sa=21000:A=21000 Sb=11000:B=11000 Display (51)									
SENSOR DATA	9					x x x.x g WT.COUNT CAL A Display (51)	x x x.x g WT.COUNT CAL B Display (51)				

NMS53x Programming Matrix (Dynamic Matrix, Temperature: G4)

GROUP MESSAGE	V \ H	0	1	2	3	4	5	6	7	8	9
TEMPERATURE DATA	4	xx.x °C LIQUD TEMP. Depending on specification and measured value Display (51)	zz.z °C GAS TEMPERATURE Depending on specification and measured value Display (51)	aaaa.a mm MEASURED LEVEL Depending on specification and measured value Display (51)	VH00 LEV.DATA SELECT VH00 or VH08 Select (51)	0.0 mm WATER BOTTOM Depending on specification and measured value Display (51)			0.0 °C REFERENCE ZERO Depending on specification and measured value Display (51)		150.0 °C REFERENCE 150 Depending on specification and measured value Display (51)
ELEMENT TEMP.	5	aa.a °C TEMP. NO.1 Depending on specification and measured value Display (51)	bb.b °C TEMP. NO.2 Depending on specification and measured value Display (51)	cc.c °C TEMP. NO.3 Depending on specification and measured value Display (51)	dd.d °C TEMP. NO.4 Depending on specification and measured value Display (51)	ee.e °C TEMP. NO.5 Depending on specification and measured value Display (51)	ff.f °C TEMP. NO.6 Depending on specification and measured value Display (51)	gg.g °C TEMP. NO.7 Depending on specification and measured value Display (51)	hh.h °C TEMP. NO.8 Depending on specification and measured value Display (51)	ii.i °C TEMP. NO.9 Depending on specification and measured value Display (51)	jj.j °C TEMP. NO.10 Depending on specification and measured value Display (51)
ELEMENT POSITION	6	xxx.x mm ELEM.1 POSITION Depending on specification Display (51)	xxx.x mm ELEM.2 POSITION Depending on specification Display (51)	xxx.x mm ELEM.3 POSITION Depending on specification Display (51)	xxx.x mm ELEM.4 POSITION Depending on specification Display (51)	xxx.x mm ELEM.5 POSITION Depending on specification Display (51)	xxx.x mm ELEM.6 POSITION Depending on specification Display (51)	xxx.x mm ELEM.7 POSITION Depending on specification Display (51)	xxx.x mm ELEM.8 POSITION Depending on specification Display (51)	xxx.x mm ELEM.9 POSITION Depending on specification Display (51)	xxx.x mm ELEM.10 POSITION Depending on specification Display (51)
NMT ADJUSTMENT	7	0 SELECT POINT 0 - 15 Selectable SELECT POINT + 1 = ELEMENT No. Set (51)	x.x °C ZERO ADJUST -20.0 - 20.0 °C Set (51)	1.000 GAIN ADJUST Current data Set (51)	xx.x °C ELEMENT TEMP Current data Display (51)	xxx.x mm ELEMENT POSITION Current data Display (51)				2 AVERAGING 1 - 10 Set (51)	530 ACCESS CODE 0 - 999 Display (51)
SET DATA NMT	8	0 DIAGNOSTIC 0 - 255 Display (51)	°C TEMPERATURE UNIT Display (51)	XX TOTAL NO.ELEMENT 2 - 16 Set (51)	5 PREAMBLE NUMBER 2 - 20 Display (51)	mm LENGTH UNIT Display (51)	EQUAL KIND OF INTERVAL UNEQUAL Select (51)	500.0 mm BOTTOM POINT 0.0 - 500.0 mm Set (51)	2000.0 mm ELEMENT INTERVAL 0.0 - 99999.9 mm Set (51)	-49.5 °C TEMP.ELEM.SHORT Set (51)	359.0 °C TEMP.ELEM. OPEN Set (51)
DEVICE DATA NMT	9	INSTRUMENT CODE Display (51)	0 LAST DIAGNOSTIC 1 Display (51)	OFF OUTPUT AT ERROR ON Select (51)	OFF CUSTODY TRANSFER ON Display (51)	2 POLLING ADDRESS 1 - F Set (51)	17 MANUFACTURE ID Display (51)	x SW VERSION Display (51)	x.xx HW VERSION Display (51)	ON BELOW BOT.POINT OFF Select (530)	DEVICE DEVICE TYPE CODE Display (51)

NMS53x Programming Matrix (Dynamic Matrix, HART DEVICE (1): G5)

GROUP MESSAGE	H / V	0	1	2	3	4	5	6	7	8	9
MEASURED VALUE	4	PV DATA Display	SV DATA Display								OFF HART DEVICE (1) ON LIQUID TEMP. GAS TEMPERATURE Select (51)
P.V.SETTING	5	P.V.RANGE UNIT Set (51)	P.V. UPPER RANGE Set (51)	P.V. LOWER RANGE Set (51)	DAMP VALUE Set (51)						
SENSOR SPECIFIC	6	SENSOR SERIAL NO Display	UPPER SENSOR LMT Display	LOWER SENSOR LMT Display							
ALARM	7										
SELF DIAGNISTIC	8	ERROR CODE(1) Display	ERROR CODE(2) Display	ERROR CODE(3) Display	ERROR CODE(4) Display	ERROR CODE(5) Display					
DEVICE DATA	9		4 POLLING ADDRESS FIXED ADDRESS Display	MANUFACTURE ID Display	DEVICE TYPE CODE Display	PREAMBLES Set	SW VERSION Display	HW VERSIION Display	DEVICE ID Display		

NMS53x Programming Matrix (Dynamic Matrix, HART DEVICE (2): G6)

GROUP MESSAGE	H / V	0	1	2	3	4	5	6	7	8	9
MEASURED VALUE	4	PV DATA Display	SV DATA Display								OFF HART DEVICE (2) ON GAS TEMPERATURE Select (51)
P.V.SETTING	5	P.V.RANGE UNIT Set (51)	P.V. UPPER RANGE Set (51)	P.V. LOWER RANGE Set (51)	DAMP VALUE Set (51)						
SENSOR SPECIFIC	6	SENSOR SERIAL NO Display	UPPER SENSOR LMT Display	LOWER SENSOR LMT Display							
ALARM	7										
SELF DIAGNISTIC	8	ERROR CODE(1) Display	ERROR CODE(2) Display	ERROR CODE(3) Display	ERROR CODE(4) Display	ERROR CODE(5) Display					
DEVICE DATA	9		5 POLLING ADDRESS FIXED ADDRESS Display	MANUFACTURE ID Display	DEVICE TYPE CODE Display	PREAMBLES Set	SW VERSION Display	HW VERSIION Display	DEVICE ID Display		

NMS53x Programming Matrix (Dynamic Matrix, ADJ. SENSOR: G7)

GROUP MESSAGE	H / V	0	1	2	3	4	5	6	7	8	9
ADJ. SENSOR	4	XXXX YYYYY ADJ. A ZERO Set (530)	XXXX YYYYY ADJ. A SPAN Set (530)	XXXX YYYYY ADJ. B ZERO Set (530)	XXXX YYYYY ADJ. B SPAN Set (530)						
HART ERROR RATE	5	0.00% ERR.RATE NRF Display (530)	0.00% ERR.RATE NMT Display (530)	0.00% ERR.RATE DEV(1) Display (530)	0.00% ERR.RATE DEV(2) Display (530)						
UNIT	6	mm LEV. UNIT (HOST) m inch cm ft Select (51)	°C TEMP. UNIT (HOST) °F °R °K Select (51)	g/ml DEN. UNIT (HOST) kg/m3, lb/gl, SGU, kg/l g/l, lb/in, st/y3 Select (51)	50 NMT HART Retry 0-99 Select (530)		mm LEV. UNIT m inch cm ft Select (51)	°C TEMP. UNIT °F °R °K Select (51)	g/ml DEN. UNIT kg/m3, lb/gl, SGU, kg/l g/l, lb/in, st/y3 Select (51)		
HART LINE*	7	Terminal Port A NMT Terminal Port B Select (777)	Terminal Port B HART DEVICE (1) Terminal Port A Select (777)	Terminal Port B HART DEVICE (2) Terminal Port A Select (777)							
INTERFACE ADJUST	8	0.3 ml VOL.TOL.FOR I/F 0.0 - 99.9 ml Set (51)	150 BRAKE RATE 1 - 255 Set (51)	15 BALANCE COUNT 0 - 255 Set (51)	0.0 mm IF1 OFFSET -9999.9 - 9999.9 mm Set (51)	0.0 mm IF2 OFFSET -9999.9 - 9999.9 mm Set (51)					
LEVEL CORRECTION	9										

NMS53x Programming Matrix (Dynamic Matrix, Tank Profile G8)

GROUP MESSAGE	H / V	0	1	2	3	4	5	6	7	8	9
PROFILE OPE.	4	0:spot OPE. SELECT 0:spot , 1:tank profile 2:I/F profile 3:MANU. I/F profile Select (51)	2 OPE. POINT 2 - 16 Set (51)		0.0 mm I/F MANU. LEVEL 0.0 - 99999.9 mm Set (51)	2.0 mm BAL. LEVEL 1.0 - 99.9 mm Set (51)	1 min UP WAIT TIME 1 - 31 min Set (51)	1 min LIQ. WAIT TIME 1 - 31 min Set (51)	1 min OPE. WAIT TIME 1 - 31 min Set (51)		
STATUS/DATA	5	0 OPE. STATUS 0 - 6 Display	0 LEVEL CONDITION 0 - 4 Display	DDHHMM OPE. TIME 000000 - 312359 Display		0.000 g/ml AVERAGE DENSITY 0.000 - 9.999 g/ml Display	0.0 C AVERAGE TEMP. 0 - 359.5 C Display				
DENSITY 1 - 10	6	0.000 g/ml NO.1 DENSITY 0.000 - 9.999 g/ml Display	0.000 g/ml NO.2 DENSITY 0.000 - 9.999 g/ml Display	0.000 g/ml NO.3 DENSITY 0.000 - 9.999 g/ml Display	0.000 g/ml NO.4 DENSITY 0.000 - 9.999 g/ml Display	0.000 g/ml NO.5 DENSITY 0.000 - 9.999 g/ml Display	0.000 g/ml NO.6 DENSITY 0.000 - 9.999 g/ml Display	0.000 g/ml NO.7 DENSITY 0.000 - 9.999 g/ml Display	0.000 g/ml NO.8 DENSITY 0.000 - 9.999 g/ml Display	0.000 g/ml NO.9 DENSITY 0.000 - 9.999 g/ml Display	0.000 g/ml NO.10 DENSITY 0.000 - 9.999 g/ml Display
DENSITY 11 - 16	7	0.000 g/ml NO.11 DENSITY 0.000 - 9.999 g/ml Display	0.000 g/ml NO.12 DENSITY 0.000 - 9.999 g/ml Display	0.000 g/ml NO.13 DENSITY 0.000 - 9.999 g/ml Display	0.000 g/ml NO.14 DENSITY 0.000 - 9.999 g/ml Display	0.000 g/ml NO.15 DENSITY 0.000 - 9.999 g/ml Display	0.000 g/ml NO.16 DENSITY 0.000 - 9.999 g/ml Display				
POSITION 1 - 10	8	0.0 mm NO.1 POSITION 0.0 - 99999.9 mm Display	0.0 mm NO.2 POSITION 0.0 - 99999.9 mm Display	0.0 mm NO.3 POSITION 0.0 - 99999.9 mm Display	0.0 mm NO.4 POSITION 0.0 - 99999.9 mm Display	0.0 mm NO.5 POSITION 0.0 - 99999.9 mm Display	0.0 mm NO.6 POSITION 0.0 - 99999.9 mm Display	0.0 mm NO.7 POSITION 0.0 - 99999.9 mm Display	0.0 mm NO.8 POSITION 0.0 - 99999.9 mm Display	0.0 mm NO.9 POSITION 0.0 - 99999.9 mm Display	0.0 mm NO.10 POSITION 0.0 - 99999.9 mm Display
POSITION 11 - 16	9	0.0 mm NO.11 POSITION 0.0 - 99999.9 mm Display	0.0 mm NO.12 POSITION 0.0 - 99999.9 mm Display	0.0 mm NO.13 POSITION 0.0 - 99999.9 mm Display	0.0 mm NO.14 POSITION 0.0 - 99999.9 mm Display	0.0 mm NO.15 POSITION 0.0 - 99999.9 mm Display	0.0 mm NO.16 POSITION 0.0 - 99999.9 mm Display				

NMS53x Programming Matrix (Dynamic Matrix, Interface Profile: G9)

GROUP MESSAGE	H / V	0	1	2	3	4	5	6	7	8	9
	4										
STATUS/DATA	5	0 OPE. STATUS 0 - 6 Display	0 LEVEL CONDITION 0 - 4 Display	DDHHMM OPE. TIME 000000 - 312359 Display	0 mm I/F LEVEL 0 - 99999.9 mm Display	0.000 g/ml AVERAGE DENSITY 0.000 - 9.999 g/ml Display	0.0 C AVERAGE TEMP. 0 - 359.5 C Display				
DENSITY 1 - 10	6	0.000 g/ml NO.1 DENSITY 0.000 - 9.999 g/ml Display	0.000 g/ml NO.2 DENSITY 0.000 - 9.999 g/ml Display	0.000 g/ml NO.3 DENSITY 0.000 - 9.999 g/ml Display	0.000 g/ml NO.4 DENSITY 0.000 - 9.999 g/ml Display	0.000 g/ml NO.5 DENSITY 0.000 - 9.999 g/ml Display	0.000 g/ml NO.6 DENSITY 0.000 - 9.999 g/ml Display	0.000 g/ml NO.7 DENSITY 0.000 - 9.999 g/ml Display	0.000 g/ml NO.8 DENSITY 0.000 - 9.999 g/ml Display	0.000 g/ml NO.9 DENSITY 0.000 - 9.999 g/ml Display	0.000 g/ml NO.10 DENSITY 0.000 - 9.999 g/ml Display
DENSITY 11 - 16	7	0.000 g/ml NO.11 DENSITY 0.000 - 9.999 g/ml Display	0.000 g/ml NO.12 DENSITY 0.000 - 9.999 g/ml Display	0.000 g/ml NO.13 DENSITY 0.000 - 9.999 g/ml Display	0.000 g/ml NO.14 DENSITY 0.000 - 9.999 g/ml Display	0.000 g/ml NO.15 DENSITY 0.000 - 9.999 g/ml Display	0.000 g/ml NO.16 DENSITY 0.000 - 9.999 g/ml Display				
POSITION 1 - 10	8	0.0 mm NO.1 POSITION 0.0 - 99999.9 mm Display	0.0 mm NO.2 POSITION 0.0 - 99999.9 mm Display	0.0 mm NO.3 POSITION 0.0 - 99999.9 mm Display	0.0 mm NO.4 POSITION 0.0 - 99999.9 mm Display	0.0 mm NO.5 POSITION 0.0 - 99999.9 mm Display	0.0 mm NO.6 POSITION 0.0 - 99999.9 mm Display	0.0 mm NO.7 POSITION 0.0 - 99999.9 mm Display	0.0 mm NO.8 POSITION 0.0 - 99999.9 mm Display	0.0 mm NO.9 POSITION 0.0 - 99999.9 mm Display	0.0 mm NO.10 POSITION 0.0 - 99999.9 mm Display
POSITION 11 - 16	9	0.0 mm NO.11 POSITION 0.0 - 99999.9 mm Display	0.0 mm NO.12 POSITION 0.0 - 99999.9 mm Display	0.0 mm NO.13 POSITION 0.0 - 99999.9 mm Display	0.0 mm NO.14 POSITION 0.0 - 99999.9 mm Display	0.0 mm NO.15 POSITION 0.0 - 99999.9 mm Display	0.0 mm NO.16 POSITION 0.0 - 99999.9 mm Display				

14.2 Description of Programming Matrix

Matrix Group	Function Group	Item	Access Code	Short Description	Default Value	Set/Select/ Display	Possible Entries	Index No. GVH
STATIC MATRIX (This word is not shown)	MEASURED VALUE 1	MEASURED LEVEL	-	Displays displacer position in relation to Ullage (Outage) or Innage as Defined by GVH190 Display Mode.	16000.0mm	Display	0.0 - 99999.9mm	000
		ULLAGE LEVEL	-	Displays difference between current displacer position and Tank Height.	0.0mm	Display	0.0 - 99999.9mm	001
		UPPER INTERF. LEV	-	Displays last recorded Upper Interface level measurement.	0.0mm	Display	0.0 - 99999.9mm	002
		MIDD. INTERF. LEV	-	Displays last recorded Middle Interface level measurement.	0.0mm	Display	0.0 - 99999.9mm	003
		BOTTOM LEVEL	-	Displays last recorded Bottom level measurement. Refer to GVH004.	0.0mm	Display	0.0 - 99999.9mm	004
		UPPER DENSITY	50	Displays last recorded Upper Density measurement OR manual setting. It is automatically overwritten when the density is measured in the NMS.	1.000g/ml	Display/Set	0.000 - 3.000g/ml	005
		MIDDLE DENSITY	50	Displays last recorded Middle Density measurement OR manual setting. It is automatically overwritten when the density is measured in the NMS.	1.000g/ml	Display/Set	0.000 - 3.000g/ml	006
		DENSITY BOTTOM	50	Displays last recorded Bottom Density measurement OR manual setting. It is automatically overwritten when the density is measured in the NMS.	1.000g/ml	Display/Set	0.000 - 3.000g/ml	007
		LEVEL DATA	-	Displays last recorded Measured Level measurement according to Balance Status.	16000.0mm	Display	0.0 - 99999.9mm	008

Matrix Group	Function Group	Item	Access Code	Short Description	Default Value	Set/Select /Display	Possible Entries	Index No. GVH
STATIC MATRIX (This word is not shown)	MEASURED VALUE 2	LIQUID TEMP.	-	Displays Liquid Temperature data reflected from G4V4H0 (NMT) or from G5V4H0 (HART Dev 1) if G5V4H9 = "Liquid Temperature".	0.0°C	Display	-49.9 - 249.9°C	010
		HART DEV(1)	-	Displays Primary Variable data reflected from G5V4H0 (HART Dev 1) when G5V4H0 = ON, Liquid Temperature or Gas Temperature. Liquid Temperature data is also copied to G0V1H0. Gas Temperature data is also copied to G0V1H0 unless G6V4H9 = Gas temperature.		Display		011
		HART DEV(2)		Displays Primary Variable data reflected from G6V4H0 (HART Dev 2) when G6V4H9 = ON or Gas Temperature Gas Temperature data is also copied to G0V1H3		Display		012
		GAS TEMPERATURE	-	Displays Gas Temperature data reflected from G4V4H1, or from G5V4H0 if G5V4H9 = Gas Temperature, of from G6V4H0 if G6V4H9 = Gas Temperature.	0.0°C	Display	-49.9 - 249.9°C	013
		WATER BOTTOM	-	Displays water interface level data received from NMT539 WB device.	0.0mm	Display		014
		ZERO POINT	-	Displays Zero Point.	0.0mm	Display	0.0 - 99999.9mm	017
		SPAN	-	Displays Span.	16000.0mm	Display	0.0 - 99999.9mm	018
		LENGTH UNIT	-	Displays unit of length.	mm	Display	mm	019

Matrix Group	Function Group	Item	Access Code	Short Description	Default Value	Set/Select /Display	Possible Entries	Index No. GVH
STATIC MATRIX (This word is not shown)〉	OPERATION	OPERATION (from display key)	50	Select operation for movement of displacer	STOP	Select	Refer to G0 Static Matrix, Operation commands.	020
		OPERATING STATUS	-	Displacer operation mode, or position status of Proservo	STOP	Display	REFERENCE UP DOWN STOP LEVEL UPPER. INTERF. LEV. MIDD. INTERF. LEV. BOTTOM LEVEL UPPER DENSITY MIDDLE DENSITY DENSITY BOTTOM RELE. OVER TENS. CAL. ACTIVE LEVEL SEEKING LEVEL FOLLOWING UPP. DEN. SEEKING MID. DEN. SEEKING BOT. DEN. SEEKING UPP. INT. SEEKING UPP. INT. FOLLOWING MID. INT. SEEKING MID. INT. FOLLOWING BOTTOM SEEKING NO INITIALIZE UPPER STOP LOWER STOP REPEATABILITY WATER SEEKING WATER LEVEL WATER FOLLOWING EMARGENCY ERROR MAINTENANCE	021

Matrix Group	Function Group	Item	Access Code	Short Description	Default Value	Set/Select/ Display	Possible Entries	Index No. GVH
STATIC MATRIX (This word is not shown)	OPERATION	BALANCE STATUS	-	Displays balance status of displacer.	UNBALANCED	Display	BALANCED UNBALANCED	022
		OPERAT. BY NRF	-	Displays operation status of NRF. If no NRF connected, display will show asterisks *******.	LEVEL	Display	LEVEL UP STOP BOTTOM LEVEL MIDD. INTERF. LEVEL UPPER DENSITY MIDDLE DENSITY DENSITY BOTTOM REPEATABILITY WATER DIP	024
		OPERAT. BY HOST	-	Displays operation status of Host CPU. If no HOST connected, display will show asterisks *******.	LEVEL	Display	LEVEL UP STOP BOTTOM LEVEL MIDD. INTERF. LEVEL UPPER DENSITY MIDDLE DENSITY DENSITY BOTTOM REPEATABILITY WATER DIP	025
		DEVICE ID	-	Displays the Device ID of NMS5 Proservo.	0	Display		028
		SOFTWARE VERSION	-	Displays the software version of NMS5 Proservo.	4.XX	Display		029

Matrix Group	Function Group	Item	Access Code	Short Description	Default Value	Set/Select /Display	Possible Entries	Index No. GVH
STATIC MATRIX (This word is not shown)	MORE FUNCTION	MATRIX OF	-	Use (+) and (-) keys, scroll through 9 Dynamic Matrix Group selections. Press "E" key to select one for access to more data.	CALIBRATION	Select	CALIBRATION DEVICE DATA SERVICE TEMPERATURE HART DEVICE (1) HART DEVICE (2) ADJ. SENSOR Tank Profile I/F Profile	030
		(Calendar)	-	Displays date, time as yymmdd __hh:mm:ss. Not transferred by Rackbus.	Current Time	Display	e.g. 141010__ 19: 10: 41 Year Month Day HH:MM:SS	033
		ALARM CONTACT	-	Display alarm message depending on current status.	NO ALARM	Display	Alarm message	034
		(Alarm History)	-	Use (+) and (-) keys, scroll through history of alarms. 035 Up to 99 alarms recorded, then oldest alarm is overwritten by new data.	NO ALARM	Display	Alarm history	035
		DIAGNOSTIC CO	-	Displays current self-diagnostic code	NO ERROR	Display	Error message	036
		(Error History)	-	Use (+) and (-) keys, scroll through history of errors, in format yymmdd hhmm°° ##. Up to 99 alarms recorded, then oldest alarm is overwritten by new data.	MPU : START ACT	Display	Error history (Example: local communication Error: DEV1 504101355 40 61 Time / Internal Temp / Err. No. select with +, -	037
		RESET ALM. DIAGNO	-	Reset Error History by setting = ON.	OFF	Display/ Select	ON OFF	038
		ACCESS CODE	-	Set access code to view and change to matrix data. Higher access codes (except 777) give greater editing privileges. 50: Operator, 51,530: Technician 777: required to select EEx i HART line,	0	Set	0 - 999	039

Matrix Group	Function Group	Item	Access Code	Short Description	Default Value	Set/Select /Display	Possible Entries	Index No. GVH
CALIBRATION	LEVEL DATA	TANK HEIGHT	50	Elevation level of manual dipping reference.	16000.0mm	Set	0.0 - 99999.9mm	140
		DIP POINT OFFSET	50	Difference between Tank Height and Reference Position of Proservo NMS5. This data is automatically adjusted by Proservo software when Set Level procedure is performed.	0.0mm	Set	-99999.9 - 99999.9mm	141
		DISPLAC. DRAFT	50	Set the draft of displacer. This value is used to calculate G0V0H4 Bottom Level measurement. For typical displacer draft settings please see Appendix "Displacers"	10.0mm	Set	0.0 - 999.9mm	142
		DISPL. RAISE DENS	51	Set distance for displacer to rise above level position during Density operations. Observe the rule: G1V4H3+ G1V4H4 = 300 n, where n = integer	150mm	Set	0 - 300mm	143
		DISPL. SUBM. DENS	51	Set distance for displacer to sink below level position during density operations. Observe the rule: G1V4H3+ G1V4H4 = 300 n, where n = integer	150mm	Set	0 - 1500mm	144
		DIG. NUM. FOR V1	51	Number of digits for V1 communication	5 CUT DOWN	Select	5 CUT DOWN 5 ROUND UP 5 ROUND OFF 6 DIGIT	148
		LEVEL BELOW 0	51	Select method for handling negative level data in V1 protocol communication. Select "99999 mm" to display negative level data backwards from 99999 mm. Select "0 mm" to display all negative level data as 0 mm.	99999mm	Select	0.0mm 99999.9mm	149

Matrix Group	Function Group	Item	Access Code	Short Description	Default Value	Set/Select /Display	Possible Entries	Index No. GVH
CALIBRATION	CALIBRATION	SET LEVEL	50	Calibrate NMS5 Proservo level display equal to manual dip level. With Operation = Level and NMS in balance status use +/- and E keys to adjust / set the data.	16000.0mm	Set	0.0 - 99999.9mm	150
		TANK CORRECT LEV.	51	Start level for tank roof compensation by level. This compensation is used in case of tank roof distortion due to hydrostatic pressure on tank wall.	0.0mm	Set	0.0 - 99999.9mm	152
		TANK CORRE. COEF.	51	Linear coefficient for tank roof compensation by level.	0.000mm/m	Set	0.000 - 59.999mm/m	153
		SAFE DENSITY	51	Select the desired resultant condition when density profile measurement fails due to displacer reaching the low-limit for density profile operation (set in G1V5H5). Selecting "ON" will result in STOP operation. Selecting "IGNOR" will result in"LEVEL" operation, displacer will return to liquid level. Selecting "OFF" will leave the displacer at the position where density profile measurement failed.	OFF	Select	OFF ON IGNOR	154
		DEN. OPE. LEVEL	51	Set the lower limit for displacer movement during density profile operation.	300.0mm	Set	0.0 - 99999.9mm	155
		SERVICE MODE	530	Deactivate Prosafety function during maintenance; level value not valid.	OFF	Select	ON/OFF	157
		PROSAFETY	530	Proactive safety function outputs maximum level value during specified error conditions.	ON	Select	ON/OFF	158
		SAFETY LEVEL	530	Adjust maximum level output value, depending on receiver specification.	99999.0/65000.0mm	Set	0.0 - 99999.0mm	159

Matrix Group	Function Group	Item	Access Code	Short Description	Default Value	Set/Select /Display	Possible Entries	Index No. GVH
CALIBRATION	ADJUSTMENT	UPPER STOP	50	Set upper limit of displacer movement during normal operation.	16000.0mm	Set	0.0 - 99999.9mm	160
		LOWER STOP	50	Set lower limit of displacer movement during normal operation.	0.0mm	Set	0.0 - 99999.9mm	161
		OVER TENS. SET	51	Set this value such that if G3V7H0 Measured Weight of displacer equals or exceeds setting at G1V6H2, motor will freeze. Increase this parameter if necessary in high viscosity liquids. Magnetic coupling disconnects above 800 grams tension	350g	Set	0 - 999g	162
		UNDER TENS. SET	51	Set this value such that if G3V7H0 Measured Weight of displacer equals or is less than setting at G1V6H3, motor will freeze. Decrease this parameter if necessary in high viscosity liquids.	50g	Set	0 - 999g	163
		SLOW HOIST	51	Displacer will enter slow speed hoist according to this value, useful if displacer contacts with narrow valves.	60mm	Set	60 - 1800mm	164
		DISPL. RAIS. REP.	51	Set the distance to raise displacer above liquid surface during repeatability test.	10mm	Set	10 - 99mm	165
		DISPL. WAIT REP.	51	Set the waiting time after displacer rises above liquid surface during repeatability test.	10s	Set	10 - 999s	166
		DISPL. WAIT DIP.	51	Used for Water Level command. Set the waiting time between displacer balance status and return to Level.	10s	Set	10 - 999s	167

Matrix Group	Function Group	Item	Access Code	Short Description	Default Value	Set/Select /Display	Possible Entries	Index No. GVH
CALIBRATION	DISPLAY	(CALIBR. AUTO/MAN)	51	Select method for measuring wire calibration. When activated, Proservo will hoist displacer into drum housing and check length of measuring wire. "Manual" setting is recommended to avoid unwanted calibration during tank loading etc.	NONE	Select	NONE	170
		(START TIME)	51	Set start time for Auto Wire Calibration. Available when G1V7H0 = "Auto"	99123123	Set	00000000 - 99999999	171
		(INTERVAL TIME)	51	Set interval time between automatic wire calibration operations. Available when G1V7H0 = "Auto"	0 hour	Set	0 - 9999 hour	172
		(AUTO COMPENSAT.)	51	Select to automatically compensate for measuring wire stretch or shrinkage detected at calibration.	OFF	Select	ON OFF	173
		(ZERO CORRECTION)	51	Displays measuring wire length deviation detected at calibration.	0.0mm	Display	0.0 - 99999.9mm	174
		(CONPENS. LIMIT)	51	Set upper limit for automatic compensation of measuring wire length. When G1V7H5 equals or exceeds this value "Wire Calib Error" displays at Home Position. Increase this parameter to clear error, or alternatively make new weight table, or replace wire drum/wire.	0.0mm	Set	0.0 - 99999.9mm	175

⚠ CAUTION

These parameters are not functional in version 4.27F and later.

Matrix Group	Function Group	Item	Access Code	Short Description	Default Value	Set/Select /Display	Possible Entries	Index No. GVH
CALIBRATION	AUTO CALIB. DISPL	(CALIBR. AUTO/MAN)	51	Select method for displacer weight calibration, useful when sludge attaches to displacer. When activated, Proservo will hoist displacer into drum housing and check weigth of displacer against data in G3V4H2. "Manual" setting is recommended to avoid unwanted calibration during tank loading etc.	NONE	Select	NONE	180
		(START TIME)	51	Set start time for Auto Displacer Calibration. Available if G1V8H0 - "Auto"	99123123	Set	00000000 - 99999999	181
		(INTERVAL TIME)	51	Set interval time between automatic displacer calibration operations. Available when G1V8H0 = "Auto"	0 hour	Set	0 - 9999 hour	182
		(AUTO COMPENSAT.)	51	Select to automatically compensate for displacer weight deviation detected at calibration.	OFF	Select	OFF ON	183
		(ZERO CORRECTION)	51	Displays displacer weight deviation detected at calibration.	0.0g	Display	0.0 - 999.9g	184
		(COMPENS. LIMIT)	51	Set upper limit for automatic compensation of displacer weight. When G1V8H5 equals or exceeds this value "Displ Calib Error" displays at Home Position. Increase this parameter to clear error, or alternatively make new weight table, or clean displacer.	0.0g	Set	0.0 - 999.9g	185

⚠ CAUTION

These parameters are not functional in version 4.27F and later

Matrix Group	Function Group	Item	Access Code	Short Description	Default Value	Set/Select /Display	Possible Entries	Index No. GVH
CALIBRATION	DISPLAY	SELECT DISP. MODE	51	Select either "Ullage (Outage) Level" or "Measured (Innage) Level".	MEASURED LEVEL	Select	ULLAGE LEVEL MEASURED LEVEL	190
		LANGUAGE	51	Select either display language.	ENGLISH	Select	ENGLISH JAPANESE CHINESE	191
		LCD CONTRAST	51	Adjust LCD display module contrast.	▮▮▮▮▮▮	Set	0 - 15	192
		YEAR SETTING	51	Current year.	Current year	Set	00 - 99	193
		MONTH SETTING	51	Current month.	Current month	Set	0 - 12	194
		DAY SETTING	51	Current day.	Current day	Set	0 - 31	195
		HOUR SETTING	51	Hour (24 hour format)	Current hour	Set	0 - 23	196
		MINUTE SETTING	51	Minute. Clock starts from 0 s when minuite is set.	Current minute	Set	0 - 59	197
		SELECT DECIMAL	51	Selection of decimal point indication by dot or comma.	[.]	Select	[.] [,]	198
		LCD CHECK	51	When set = ON, display becomes dark as all pixels display for 3 seconds if normal. When set = OFF display become blank for 3 seconds if normal.	OFF	Select	OFF ON	199

Matrix Group	Function Group	Item	Access Code	Short Description	Default Value	Set/Select /Display	Possible Entries	Index No. GVH
DEVICE DATA	CONTACT OUTPUT	SELECT. RELAY	50	Use +/- and E keys to select to activate Contact Output Relays 1 to 4.	1	Select	1 - 4	240
		ASSIGN RELAY	50	Select output definition from range of choices : None, Level, Liquid Temp, Caution, Warning, Emergency Error, Balance Signal.	NONE	Select	LEVEL, LIQUID TEMP, CAUTION, WARNING, EMERGENCY ERROR BALANCE SIGNAL	241
		RELAY FUNCTION	50	Select High or Low function, available only when G2V4H1 = "Level"or "Liquid Temp."	HIGH	Select	HIGH LOW	242
		SWITCHING POINT	50	Set level at which relay is activated, available only when G2V4H1= "Level" or "Liquid Temp."	0mm/0°C	Set	Level: 0 - 99999mm Liquid Temperature: -999 - 999°C	243
		HYSTERISIS	50	Set hysterisis value for selected relay, available only when G2V4H1= "Level" or "Liquid Temp."	0mm/0°C	Set	Level: 0 - 99999mm Liquid Temperature: -999 - 999°C	244
		RELAY ON ALARM	50	Select from Normal Open or Normal close, available only when G2V4H1= "Level" or "Liquid Temp." ⚠ CAUTION Alarm contact output does not change when turning power off.	NORMAL OPENED	Select	NORMAL OPEN (NO) NORMAL CLOSE (NC)	245
		ON DELAY TIME	50	Set delay time for alarm output start, available only when G2V4H1= "Level" or "Liquid Temp."	0s	Set	0 - 999s	246
		OFF DELAY TIME	50	Set delay time for alarm spot, available only when G2V4H1= "Level" or "Liquid Temp."	0s	Set	0 - 999s	247

Matrix Group	Function Group	Item	Access Code	Short Description	Default Value	Set/Select /Display	Possible Entries	Index No. GVH
DEVICE DATA	ANALOG OUT. ADJUST	ASSIGN OUTPUT 1	51	Assign analog output for channel 1.	NONE	Select	NONE LEVEL UPPER. INTERF. LEV: LIQUID TEMP.	250
		ADJUST 4mA	51	Set level or temperature value for 4 mA output on channel 1. Available only when G2V5H0 = "Level" or "Liquid Temp"	0mm / 0.0°C	Set	FOR LEVEL or UPPER. INTEREF. LEV: 0 to 99999mm For LIQUID TEMP.: -9999.9 to 9999.9°C	251
		ADJUST 20mA	51	Set level or temperature value for 20 mA output on channel 1. Available only when G2V5H0 = "Level" or "Liquid Temp"	0mm / 0.0°C	Set	FOR LEVEL or UPPER. INTEREF. LEV: 0 to 99999mm For LIQUID TEMP.: -9999.9 to 9999.9°C	252
		ASSIGN OUTPUT 2	51	Assign analog output for channel 2.	NONE	Select	NONE LEVEL UPPER. INTERF. LEV: LIQUID TEMP.	253
		ADJUST 4mA	51	Set level or temperature value for 4 mA output on channel 2. Available only when G2V5H3 = "Level" or "Liquid Temp"	0mm / 0.0°C	Set	FOR LEVEL or UPPER. INTEREF. LEV: 0 to 99999mm For LIQUID TEMP.: -9999.9 to 9999.9°C	254
		ADJUST 20mA	51	Set level or temperature value for 20 mA output on channel 2. Available only when G2V5H3 = "Level" or "Liquid Temp"	0mm / 0.0°C	Set	FOR LEVEL or UPPER. INTEREF. LEV: 0 to 99999mm For LIQUID TEMP.: -9999.9 to 9999.9°C	255
		DEVICE AT ALARM	51	Select type of output for alarm. Select from OFF, HOLD current output, Maximum value or Minimum value OFF: no specific action is taken. HOLD: hold current value. MAX: output 22mA instead of current value. MIN: output 2mA instead of current value.	OFF	Select	OFF HOLD CURNT. OUT MAX MIN	256

Matrix Group	Function Group	Item	Access Code	Short Description	Default Value	Set/Select/ Display	Possible Entries	Index No. GVH
DEVICE DATA	PARTS DATA	PARTS NUMBER	51	Set number for control-target parts (inside Proservo) to monitor.	1	Set	1 - 10	260
		PARTS TYPE	51	Allocate the partto the selected number.	NONE	Select	NONE POWER UNIT DISPLAY, MOTOR WIRE, BEARINGS SHAFT	261
		MAINTEN. FACTOR	51	Select method of monitoring part, either Operation Hours or Drum Revolutions.	OPERATION HOUR	Select	OPERATION HOUR DRUM REVOLT.	262
		MAINTEN. VALUE	51	Set the target maintenance (hours or revolutions) value for selected parts	1 hour or 1 round	Set	0 - 999999 hour or 0 - 999999 round	263
		OPERATION TIME	51	Displays the accumulated operation time or revolutions for selected part. Note : Reset this value to 0 after parts replacement.	1 hour or 1 round	Display/Se t	0 - 999999 hour or 0 - 999999 round	264
		(Parts Overused Data)	51	Displays date when parts reached terget value set in G2V6H3. POWER UNIT Data format : yy mm dd hh mm.		Display	Year Month Day Hour Minute	265
		REPLACED PARTS	51	Select part that has been replaced	NONE	Select	NONE POWER UNIT DISPLAY, MOTOR WIRE, BEARINGS SHAFT	266
		(Parts Replaced Data)	51	Displays date when parts were replaced. Data format : yy mm dd hh mm.	NONE	Display	Year Month Day Hour Minute	267

Matrix Group	Function Group	Item	Access Code	Short Description	Default Value	Set/Select /Display	Possible Entries	Index No. GVH
DEVICE DATA	INPUT SIGNAL	OPE. CONTACT	51	Displacer operation by contact input. Available if Contact Input (I/O 3 card) function is installed. Display shows either "NONE" or "Activated". Input State: Operation 1 OFF 2 ON: Level 1 ON 2 OFF: Hois up 1 OFF 2 ON: Stop 1 ON 2 ON: Interface	NONE	Select	NONE ACTIVATED	270
		CUSTODY TRANSFER	51	Displacer indicates whether Custody Transfer software is installed and activated or not (OFF or ON).	OFF	Display	OFF, ON	271
		NEW NMS STATUS	51	Switches NMS Status codes between old and new version, new version includes new operations and statuses. ⚠ CAUTION For Rackbus communication, it is necessary to define "Operating Status" as ON or OFF.	DISABLED	Select	DISABLED ENABLED	272
		SW VERSION	51	Displays software version of NMS 53x Proservo.	4.xx	Display		275
		HW VERSION	51	Displays hardware version of NMS 53x Proservo. "2.00" = TCB-2, "4.00" = TCB - 4, "6.00 = TCB - 6"	6.00	Display		276
		OPE. DENSITY	51	Upper density which is used for level measurement at maintenance mode	1.00g/mL	Set	0 - 3.000	278
		OPE. CONT. STATUS	51	Displays the terminal numbers in use. (binary converted to decimal).	0	Display	0 - 15	279

Matrix Group	Function Group	Item	Access Code	Short Description	Default Value	Set/Select /Display	Possible Entries	Index No. GVH
DEVICE DATA	COMMUNICATION	LEVEL ALARM 1	51	Select Upper or Lower limit on innage level relative to setting of Alarm 1 for bi-directional 2-wire communications.	HIGH	Select	HIGH LOW NONE	280
		SET LEVEL ALARM 1	51	Set alarm output level for Alarm 1.	0.0mm	Set	0.0 - 99999.9mm	281
		LEVEL ALARM 2	51	Select Upper or Lower limit on innage level relative to setting of Alarm 2 for bi-directional 2-wire communications.	HIGH	Select	HIGH LOW NONE	282
		SET LEVEL ALARM 2	51	Set alarm output level for Alarm 2.	0.0mm	Set	0.0 - 99999.9mm	283
		HYSTERESIS	51	Set hysteresis for Alarm 1 and 2.	0.0mm	Set	0.0 - 99999.9mm	284
		ADDRESS	51	Set address for remote or multidrop communication.	0	Set	0 - 999	285
		PROTOCOL	51	Select communications protocol for remote/multi-drop communication.	Dependent on NMS specifications	Select	BBB, MDP, V1/ENRAF, RACK BUS, HART, MarkSpace, WM550, MODBUS	286
		COMMU. LINE ADJ	51	Adjust line resistance for serial pulse V1 communications.	F	Set	0 - F	287
		COMMUNIC. STATUS	51	Displays current communication status with Host (See NMS Status Code).	0	Display		288
		MODBUS Config	-	Set configuration of Modbus communication. Modbus parameters for G2V8H9 0: 1200bps /Even | 3: 2400bps /Even | 6: 4800bps /Even | 9: 9600bps /Even | 12: 19200bps /Even 1: 1200bps /Odd | 4: 2400bps /Odd | 7: 4800bps /Odd | 10: 9600bps /Odd | 13: 19200bps /Odd 2: 1200bps /None | 5: 2400bps /None | 8: 4800bps /None | 11: 9600bps /None | 14: 19200bps /None	0	Set	0 - 14	289

<table>
<tr><th>Matrix Group</th><th>Function Group</th><th>Item</th><th>Access Code</th><th>Short Description</th><th>Default Value</th><th>Set/Select /Display</th><th>Possible Entries</th><th>Index No. GVH</th></tr>
<tr><td rowspan="7">DEVICE DATA</td><td rowspan="7">STATUS</td><td>STATUS 1 DELAY</td><td>51</td><td>Set delay time between activation of Status 1 ON input signal and Status 1 output signal.</td><td>0s</td><td>Set</td><td>0 - 99s</td><td>290</td></tr>
<tr><td>SELECT CONTACT</td><td>51</td><td>Select normal relay condition for Status1: Normal Open or Normal Closed.</td><td>NONE</td><td>Select</td><td>NONE
NORMAL OPENED
NORMAL CLOSED
(ALARM = OPEN)
(ALARM = CLOSED)</td><td>291</td></tr>
<tr><td>WM550 ALM. SELECT</td><td>51</td><td>Set the Alarm Bit for WM550 communication.
(Available only with WM550 specification).
<table><tr><td>1: bit 0 Alarm No.1 (High-high)</td><td>2: bit 1 Alarm No.2 (High)</td><td>3: bit 2 Alarm No.3 (Low)</td><td>4: bit 3 Alarm No.4 (Low-low)</td></tr></table></td><td>1</td><td>Select</td><td>4-Jan</td><td>292</td></tr>
<tr><td>WM550 BSW SELECT</td><td>51</td><td>Select source of BSW level data for WM550 communication.
"0" = Upper I/F Level, "1" = (NMT539)Water Bottom level.
(Available only with WM550 specification)</td><td>0</td><td>Select</td><td>0 - 1</td><td>293</td></tr>
<tr><td>WM550 DENS. SEL.</td><td>51</td><td>Select source of data transmit in response to task 17, sub-task 11 query.
(Available only with WM550 specification).
<table><tr><th>Parameter</th><th>Density Data Source</th><th>Temp. Data Source</th></tr><tr><td>0: Upper Density</td><td>GVH005 Upper Density</td><td>GVH010 Liquid Temp.</td></tr><tr><td>1: Profile Ave. Dens.</td><td>GVH854 Average Density</td><td>GVH855 Average Temp.</td></tr><tr><td>2: IF Prof. Ave. Dens.</td><td>GVH954 Average Density</td><td>GVH955 Average Temp.</td></tr></table></td><td>0</td><td>Select</td><td>0 - 2</td><td>294</td></tr>
<tr><td>WMS550 SW_ID_20xx</td><td>51</td><td>Set the last 2 digits (xx) of the WM550 sensor address (20xx).
(Available only with WM550 specification)</td><td>37</td><td>Set</td><td>0 - 99</td><td>295</td></tr>
<tr><td>BALANCE DELAY</td><td>51</td><td>Sets time between displacer balance and Balance Signal output.</td><td>0s</td><td>Set</td><td>0 - 99s</td><td>299</td></tr>
</table>

Matrix Group	Function Group	Item	Access Code	Short Description	Default Value	Set/Select /Display	Possible Entries	Index No. GVH
SERVICE	MEAS. WIRE & DRUM	WIRE DRUM CIRC.	51	Circumference of wire drum is measured at factory and inscribed on the wire drum. Used by CPU to calculate Measured Level.	300.000mm	Set	0.000 - 999.999mm	340
		WIRE WEIGHT	51	Weight of measuring wire per 10 meters. Used by CPU to determine balance weight. Standard measuring wire is 1.40 g/10 m. PFA wire is 4.55 g/10 m. Hastelloy C wire is 2.8 g/10 m	1.40g/10m	Set	0.00 - 999.99g/10m	341
		DISPLACER WEIGHT	51	Weight of displacer is measured at factory and inscribed on the wire drum. Used by CPU to calculate Measured and Interface Levels and densities.	XXX.Xg	Set	0.0 - 999.9g	342
		DISPLACER VOLUME	51	Total volume of displacer is measured at factory and inscribed on the wire drum. Used by CPU to calculate Interface Levels and Densities.	XXX.Xml	Set	0.0 - 999.9ml	343
		BALANCE VOLUME	51	Balance volume of displacer is measured at factory and inscribed on the wire drum, approximately one-half of Displacer Volume (G3V4H3). Used by CPU to calculate Measured and Interface Levels.	XXX.Xml	Set	0.0 - 999.9ml	344
		VOLUME TOLERANCE	51	Displacer immunity to variation in liquid surface level during Balance condition. Based on density = 1.0, setting for standard 50 mm displacer is 1.0 mL (1 g). Increase to counter turbulence and waves. Level accuracy varies inversely as Volume Tolerance.	1.0ml	Set	0.0 - 999.9ml	345
		DELAY	51	Interval until displacer responds to change in liquid level. Increase to counter small	20 x 100ms	Set	0 - 99 x 100ms	347
		DRUM CORRECTION	51	The error of the wire length of one drum revolution is set as correction value.	0.00mm/m	Set	0.00 - 99.00mm/m	348
		DISPL. HUNT. COUNT	51	Defines the number of times displacer searches for balance condition. To balance on solid surface set to non-zero value (e.g. 1)	0 count	Set	0 - 99 count	349

<table>
<tr><th>Matrix Group</th><th>Function Group</th><th>Item</th><th>Access Code</th><th>Short Description</th><th>Default Value</th><th>Set/Select /Display</th><th>Possible Entries</th><th>Index No. GVH</th></tr>
<tr><td rowspan="11">SERVICE</td><td rowspan="8">GAUGE DATA</td><td>ACTUAL LEVEL</td><td>530</td><td>Level from Reference Position to displacer</td><td>0.0mm</td><td>Display</td><td>OK</td><td>350</td></tr>
<tr><td>ENCODER COUNT</td><td>530</td><td>Encoder pulse count</td><td>0 count</td><td>Display</td><td>OK</td><td>351</td></tr>
<tr><td>NON HYSTER. MODE</td><td>51</td><td>Non-Hysteresis Operation mode. When turned ON displacer is rasied approx. 2mm and then seeks balance condition again.</td><td>OFF</td><td>Select</td><td>OFF
ON</td><td>352</td></tr>
<tr><td>HI. ACCURACY MODE</td><td>51</td><td>When displacer reaches Temporary Balance condition, it is raised (GcV5H5) millimeters, weighed and then seeks balance condition again.</td><td>OFF</td><td>Select</td><td>OFF
ON</td><td>353</td></tr>
<tr><td>HI. ACCR. OPE TIME</td><td>51</td><td>Interval of Temporary Balance condition until displacer is raised and weighed.</td><td>0s</td><td>Set</td><td>0 - 600s</td><td>354</td></tr>
<tr><td>HI.ACC.DISP.UP</td><td>51</td><td>Distance displacer raised in High Accuracy Mode operation.</td><td>50mm</td><td>Set</td><td>0 - 300mm</td><td>355</td></tr>
<tr><td>GAUGE TEMP</td><td>51</td><td>Displays temperature inside electronics housing of NMS5.</td><td>XXX°C</td><td>Display</td><td>-999 - 999°C</td><td>356</td></tr>
<tr><td>DEFAULT VALUES</td><td>530</td><td>Initialization of device data. (factory reset)</td><td>OFF</td><td>Select</td><td>ON</td><td>359</td></tr>
<tr><td rowspan="3">SYSTEM DATA</td><td>SENSOR DATA</td><td>-</td><td>Displays NMS5 Proservo specifications :
software and hardware versions, remote communication (On/Off), drive gear ratio.</td><td>LOCAL: MASTER</td><td>Display</td><td>REMOTED COM. ON
SOFTWARE = xxx
HARDWARE= TCB0x
GEAR 1:36
NOT OVERSPILL</td><td>360</td></tr>
<tr><td>CONNECTION NRF</td><td>51</td><td>Selects switch for communications to NRF 560 Promonitor.
For NRF 560 SW v1.81 and before, select Contact 1. For NRF 560
SW v1.82 and laten, select Contact 2.</td><td>OFF</td><td>Select</td><td>OFF
CONTACT 1
CONTACT 2</td><td>361</td></tr>
<tr><td>CONNECTION NMT</td><td>51</td><td>Select switch for communication to NMT5 Series Prothermo.
Select Average or Spot.</td><td>OFF</td><td>Select</td><td>OFF, SPOT TEMP.
AVARAGE TEMP.</td><td>362</td></tr>
<tr><td></td><td>IF LEVEL SELECT</td><td>51</td><td>Select free scanning data source for water level (WM550 only).
<table>
<tr><th>Parameter</th><th>Free Scan Data Source</th></tr>
<tr><td>UP_IF_LEVEL</td><td>NMS Proservo: Upper Interface Level or Water Dip Operation</td></tr>
<tr><td>WATER BOTTOM</td><td>NMT539 WB: Water bottom level data is taken for HART FreeScan. If upper interface command is received from host via Sakura V1 communication, water bottom level is returned. Other operations return data based on the proservo setting (upper interface or water dip opration). Water bottom data is taken via interrupt-scan in HART communication.</td></tr>
<tr><td>WATER BOTTOM 2</td><td>NMT539 WB: Water bottom level data is taken for HART FreeScan. Upper interface command returns data based on the proservo setting (upper interface or water dip opration). Water bottom data is taken via interrupt-scan in HART communication.</td></tr>
</table></td><td></td><td>Select</td><td>UP LEVEL SELECT
UP IF LEVEL
WATER BOTTOM
WATER BOTTOM 2</td><td>368</td></tr>
<tr><td></td><td>SOFT RESET</td><td>51</td><td>Restarts NMS5 Proservo software</td><td>OFF</td><td>Select</td><td>OFF
ON</td><td>369</td></tr>
</table>

Matrix Group	Function Group	Item	Access Code	Short Description	Default Value	Set/Select /Display	Possible Entries	Index No. GVH
SERVICE	SERVICE	MEASURED WEIGHT	-	Displays tension on measuring wire as calculated by NMS CPU module.	XXX.Xg	Display	0.0 - 999.9g	370
		RELE. OVER TENS	51	Release displacer overtension condition. Note : First, set G0V2H0. Operation = STOP.	OFF	Select	OFF ON	371
		DRUM SETTING	51	Aligns wire drum with internal detector unit. When displacer is shipped eparately, and wire drum is removed to install displacer, set this function prior to making new Weight Calibration. Not required for All-in-One shipments of NMS5 Proservo.	OFF	Select	OFF ON	372
		WEIGHT CALIBR.	51	Initiates Weight Table recalibration procedure. Overwrites existing weight table with new weight table. Caution!: Once recalibration procedure begins it must be completed, i.e. it connot be stopped or reversed.	OFF	Select	OFF ON	373
		DISPL. REFERENCE	51	Length for the starting position of weight calibration. The displacer will stop at this position without regard to the high stop level when it is hoisted, if the high stop level is set higher than this point.	70mm	Set	0 - 999mm	378
		ZERO ADJ. WEIGHT	51	Low weight for weight calibration.	0.0g / 50.xg	Set	0.0 - 999.9g	379
	SERVICE VALUE	SENSOR VALUE	51	Displays the A/D values from the encoder.	Sa ≈21000 A ≈ 21000 Sb ≈11000 B ≈11000	Display		380
	SERVICE DATA	WT. COUNT CAL A	51	Displays A/D and displacer weight correction values for Sensor A Use the + and - key to scroll through 50 points.	X X X.Xg	Display		394
		WT. COUNT CAL. B	51	Displays A/D and displacer weight correction values for Sensor B Use the + and - key to scroll through 50 points.	X X X.Xg	Display		395

Matrix Group	Function Group	Item	Access Code	Short Description	Default Value	Set/Select /Display	Possible Entries	Index No. GVH
TEMPERATURE	TEMPERATURE DATA	LIQUD TEMP.	51	Displays current average liquid temperature.	XX.X °C	Display	Depending on specification and	440
		GAS TEMPERATURE	51	Displays current average gas temperature.	XX.X °C	Display	Depending on specification and	441
		MEASURED LEVEL	51	Displays Measured Level data received from NMS5 Proservo,depending on selection at G4V4H3 Level Data Select.	XXXXX.Xmm	Display	Depending on specification and measured value	442
		LEV. DATA SELECT	51	Select level data to receive from NMS5 Proservo, used for averaging calculations. Select "VH00" to receive Measured Level (actual displacer position). Select "VH08" to receive Level Data (last recorded level position).	VH00	Select	VH00 VH08	443
		WATER BOTTOM	51	Displays water level data from the NMT 539 Water Bottom. G3V6H8 must be set to either "WATER BOTTOM" or "WATER BOTTOM2"	0.0mm	Display	Depending on specification and measured value	444
		DIAGNOSTIC	51	Displays reference resistance on circuit board corresponding to 0°C.	0.0 °C	Display	Depending on specification and	447
		REFERENCE 150	51	Displays reference resistance on circuit board corresponding to 150°C.	150 °C	Display	Depending on specification and	449

Matrix Group	Function Group	Item	Access Code	Short Description	Default Value	Set/Select /Display	Possible Entries	Index No. GVH
TEMPERATURE	ELEMENT TEMP. Depending on specification and measured value.	TEMP. NO.1	51	Displays temperature of element 1 (lowest element).	XXX.X °C	Display	Depending on NMT specifications	450
		TEMP. NO.2	51	Displays temperature of element 2.	XXX.X °C	Display	Depending on NMT specifications	451
		TEMP. NO.3	51	Displays temperature of element 3.	XXX.X °C	Display	Depending on NMT specifications	452
		TEMP. NO.4	51	Displays temperature of element 4.	XXX.X °C	Display	Depending on NMT specifications	453
		TEMP. NO.5	51	Displays temperature of element 5.	XXX.X °C	Display	Depending on NMT specifications	454
		TEMP. NO.6	51	Displays temperature of element 6.	XXX.X °C	Display	Depending on NMT specifications	455
		TEMP. NO.7	51	Displays temperature of element 7.	XXX.X °C	Display	Depending on NMT specifications	456
		TEMP. NO.8	51	Displays temperature of element 8.	XXX.X °C	Display	Depending on NMT specifications	457
		TEMP. NO.9	51	Displays temperature of element 9.	XXX.X °C	Display	Depending on NMT specifications	458
		TEMP. NO.10	51	Displays temperature of element 10.	XXX.X °C	Display	Depending on NMT specifications	459

Matrix Group	Function Group	Item	Access Code	Short Description	Default Value	Set/Select /Display	Possible Entries	Index No. GVH
TEMPERATURE	ELEMENT POSITION Depending on specification	ELEM.1 POSITION	51	Displays position of element 1, also called "Bottom" (lowest) element.	XXX.Xmm	Display	0 - 99999.9mm	460
		ELEM.2 POSITION	51	Displays position of element 2.	XXX.Xmm	Display	0 - 99999.9mm	461
		ELEM.3 POSITION	51	Displays position of element 3.	XXX.Xmm	Display	0 - 99999.9mm	462
		ELEM.4 POSITION	51	Displays position of element 4.	XXX.Xmm	Display	0 - 99999.9mm	463
		ELEM.5 POSITION	51	Displays position of element 5.	XXX.Xmm	Display	0 - 99999.9mm	464
		ELEM.6 POSITION	51	Displays position of element 6.	XXX.Xmm	Display	0 - 99999.9mm	465
		ELEM.7 POSITION	51	Displays position of element 7.	XXX.Xmm	Display	0 - 99999.9mm	466
		ELEM.8 POSITION	51	Displays position of element 8.	XXX.Xmm	Display	0 - 99999.9mm	467
		ELEM.9 POSITION	51	Displays position of element 9.	XXX.Xmm	Display	0 - 99999.9mm	468
		ELEM.10 POSITION	51	Displays position of element 10.	XXX.Xmm	Display	0 - 99999.9mm	469

Matrix Group	Function Group	Item	Access Code	Short Description	Default Value	Set/Select /Display	Possible Entries	Index No. GVH
TEMPERATURE	NMT ADJUSTMENT	SELECT. POINT	51	Select element number for zero adjustment procedure. Selection begins at 0, which is element 1. Select 1 for element 2, etc. Also used to select elements 11-16 (input 10-15)	0	Set	0-15 Selectable 0(No.1) - 15(No.16)	470
		ZERO ADJUST	51	Set zero adjustment value for element selected at G4V7H1.	0.0℃	Set	-20.0 - 20.0℃	471
		GAIN ADJUST	51	Set gain adjustment value for temperature measurment. This setting is made at factory before shipping and should not be adjusted in the field.	1.000	Set		472
		ELEMENT TEMP	51	Displays temperature for element No. 10-15 ⚠ CAUTION (No. 16 for NMT module only).	XXX.X℃	Display	Dependent on NMT specifications	473
		ELEMENT POSITION	51	Displays temperature for element No. 10-15 when selected at G4V7H0 Select Point. ⚠ CAUTION (No. 16 for NMT modules only)	XXX.Xmm	Display	0.0 - 99999.9mm	474
		AVERAGING	51	Set sampling coefficient for averaging data. Increase to reduce impact of noise.	2	Set	10-Jan	478
		ACCESS CODE	51	Displays current Access code.	530	Set	0 - 999	479

Matrix Group	Function Group	Item	Access Code	Short Description	Default Value	Set/Select /Display	Possible Entries	Index No. GVH
TEMPERATURE	SET DATA NMT	DIAGNOSTIC	51	Displays current NMT diagnostic code.	0	Display	0 - 255	480
		TEMPERATURE UNIT	51	Displays selected temperature unit.	℃	Display		481
		TOTAL NO. ELEMENT	51	Set total number of elements in NMT temperature sensor.	XX	Set	16-Feb	482
		PREAMBLE NUMBER	51	Display of preambles for HART protocol.	5	Display	20-Feb	483
		LENGTH UNIT	51	Displays selected length unit.	mm	Display		484
		KIND OF INTERVAL	51	Select type interval between temperature elements. If Unequal is selected, must set element poisitions at G4V6 H0 to 9, G4V7H4. This value is set at the factory. User does not have to set.	Dependent on NMT specifications	Select	EQUAL UNEQUAL	485
		BOTTOM POINT	51	Set position of element 1 (lowest element) above tank bottom. Available only when G4V8H5 = Equal. This value is set at the factory. User does not have to set.	500.0mm	Set	0.0 - 500.0mm	486
		ELEMENT INTERVAL	51	Set spacing between elements. Available only when G4V8H5 = Equal. This value is set at the factory. User does not have to set.	2000.0mm	Set	0.0 - 99999.9mm	487
		TEMP. ELEM. SHORT	51	Set temperature indication sent to NMS5 Proservo Home Position when element is shorted and G4V9H2 = ON.	-49.5℃	Set	-49.5 - 359.5℃	488
		TEMP. ELEM. OPEN	51	Set temperature indication sent to NMS5 Proservo Home Position when element is open and G4V9H2 = ON.	359.0℃	Set	-49.5 - 359.5℃	489

Matrix Group	Function Group	Item	Access Code	Short Description	Default Value	Set/Select /Display	Possible Entries	Index No. GVH
TEMPERATURE	DEVICE DATA NMT	INSTRUMENT CODE	51	Displays hardware unit number.		Display		490
		LAST DIAGNOSTIC	51	Displays most recent error message.		Display		491
		OUTPUT AT ERROR	51	Select ON for output and indication in case of element short or element open condition.	0	Select	0 (OFF) 1 (ON)	492
		CUSTODY TRANSFER	51	Display status of custody transfer function.	OFF	Select	OFF ON	493
		POLLING ADDRESS	51	Select polling address (1-F) for NMT535/539/532 Prothermo for use in multi-drop applications. Set address 3 for connection with NMS.	2	Set	1 - F (16 addresses)	494
		MANUFACTURE ID	51	Displays identification number for NMT535/539/532 Prothermo. Endress+Hauser: 17	17	Display		495
		SW VERSION	51	Displays software version of NMT535/539/532 Prothermo.	XXX	Display		496
		HW VERSION	51	Displays hardware version of NMT535/539/532 Prothermo.	X.XX	Display		497
		BELOW BOT. POINT	530	Select ON to cancel "NMT Below Bottom Point" error message output to MMS when displacer sinks below lowest temperature element.	ON	Select	OFF ON	498
		DEVICE TYPE CODE	51	Dispklays device type code for NMT535/539/532 Prothermo.	XXX	Display		499

Matrix Group	Function Group	Item	Access Code	Short Description	Default Value	Set/Select /Display	Possible Entries	Index No. GVH
HART DEVICE (1)	MEASURED VALUE	PV DATA	-	Displays primary variable data of the HART Device.		Display		540
		SV DATA	-	Displays secondary variable data of the HART Device.		Display		541
		HART DEVICE (1)	51	Select HART Device 1 function: OFF, ON, Liquid Temperature, Gas Temperature. If "Liquid Temperature" is selected, value is reflected at G0V1H0 and G0V1H1.	OFF	Select	OFF LIQUID TEMP. GAS TEMPERATURE ON	549
	P.V.SETTING	P.V.RANGE UNIT	51	Setting of range unit for primary variable in HART command code.		Set		550
		P.V.UPPER RANGE	51	Setting of upper range of primary variable.		Set		551
		P.V.LOWER RANGE	51	Setting of lower range of primary variable.		Set		552
		DAMP VALUE	51	Setting of damping of primary variable.		Set		553
	SENSOR SPECIFIC	SENSOR SERIAL NO	-	Displays sensor serial number.		Display		560
		UPPER SENSOR LMT	-	Displays upper limit of the HART Device.		Display		561
		LOWER SENSOR LMT	-	Dispalys lower limit of the HART Device.		Display		562
	SELF DIAGNISTIC Consult HART device operation / service manual	ERROR CODE (1)	-	Displays of the error code (1) the HART device.		Display		580
		ERROR CODE (2)	-	Displays of the error code (2) the HART device.		Display		581
		ERROR CODE (3)	-	Displays of the error code (3) the HART device.		Display		582
		ERROR CODE (4)	-	Displays of the error code (4) the HART device.		Display		583
		ERROR CODE (5)	-	Displays of the error code (5) the HART device.		Display		584
	DEVICE DATA	POLLING ADDRESS	-	Displays polling address of HART Device 1. Address (fixed) = 4. The following polling address are already used NRF=1, NMT=2, Level Device=3. When connecting a pressure sensor, ID(1)=4 and/or ID(2)=5 are used.	4	Display		591
		MANUFACTURE ID	-	Displays manufacturer ID number of the HART Device.		Display		592
		DEVICE TYPE CODE	-	Displays device type code of the HART Device.		Display		593
		PREAMBLES	-	Set number of preambles for the HART device.		Set		594
		SW VERSION	-	Displays the software version for the HART device.		Display		595
		HW VERSION	-	Displays the hardware version for the HART device.		Display		596
		DEVICE ID	-	Displays the device ID for the HART device.		Display		597

Matrix Group	Function Group	Item	Access Code	Short Description	Default Value	Set/Select /Display	Possible Entries	Index No. GVH
HART DEVICE (2)	MEASURED VALUE	PV DATA	-	Displays primary variable data of the HART Device.		Display		640
		SV DATA	-	Displays secondary variable data of the HART Device.		Display		641
		HART DEVICE (2)	51	Select HART Device 1 function: OFF, ON, Liquid Temperature, Gas Temperature. If "Liquid Temperature" is selected, value is reflected at G0V1H0 and G0V1H1.	OFF	Select	OFF LIQUID TEMP. GAS TEMPERATURE ON	649
	P.V.SETTING	P.V.RANGE UNIT	51	Setting of range unit for primary variable in HART command code.		Set		650
		P.V.UPPER RANGE	51	Setting of upper range of primary variable.		Set		651
		P.V.LOWER RANGE	51	Setting of lower range of primary variable.		Set		652
		DAMP VALUE	51	Setting of damping of primary variable.		Set		653
	SENSOR SPECIFIC	SENSOR SERIAL NO	-	Displays sensor serial number.		Display		660
		UPPER SENSOR LMT	-	Displays upper limit of the HART Device.		Display		661
		LOWER SENSOR LMT	-	Dispalys lower limit of the HART Device.		Display		662
	SELF DIAGNISTIC Consult HART device operation / service manual	ERROR CODE (1)	-	Displays of the error code (1) the HART device.		Display		680
		ERROR CODE (2)	-	Displays of the error code (2) the HART device.		Display		681
		ERROR CODE (3)	-	Displays of the error code (3) the HART device.		Display		682
		ERROR CODE (4)	-	Displays of the error code (4) the HART device.		Display		683
		ERROR CODE (5)	-	Displays of the error code (5) the HART device.		Display		684
	DEVICE DATA	POLLING ADDRESS	-	Displays polling address of HART Device 2. Address (fixed) = 5. The following polling address are already used NRF=1, NMT=2, Level Device=3. When connecting a pressure sensor, ID(1)=4 and/or ID(2)=5 are used.	5	Display		691
		MANUFACTURE ID	-	Displays manufacturer ID number of the HART Device.		Display		692
		DEVICE TYPE CODE	-	Displays device type code of the HART Device.		Display		693
		PREAMBLES	-	Set number of preambles for the HART device.		Display		694
		SW VERSION	-	Displays the software version for the HART device.		Display		695
		HW VERSION	-	Displays the hardware version for the HART device.		Display		696
		DEVICE ID	-	Displays the device ID for the HART device.		Display		697

Matrix Group	Function Group	Item	Access Code	Short Description	Default Value	Set/Select /Display	Possible Entries	Index No. GVH
ADJ. SENSOR	ADJ. SENSOR	ADJ A ZERO	530	Hall Sensor A Zero signal		Set		740
		ADJ A ZERO	530	Hall Sensor A Zero signal		Set		741
		ADJ B SPAN	530	Hall Sensor B Full span signal		Set		742
		ADJ B SPAN	530	Hall Sensor B Full span signal		Set		743
	HART ERROR RATE	ERR. RATE NRF	530	Communication error rate	0.00%	Display		750
		ERR. RATE NMT	530	Communication error rate	0.00%	Display		751
		ERR. RATE DEV (1)	530	Communication error rate	0.00%	Display		752
		ERR. RATE DEV (2)	530	Communication error rate	0.00%	Display		753
	UNIT	LEV. UNIT (HOST)	51	Select display units for level value data to be sent to host CPU via remote communications	mm	Select	m, inch, cm, ft	760
		TEMP UNIT (HOST)	51	Select units for temperature value data to be sent to host CPU via remote communications	℃	Select	℃ °F °R °K	761
		DEN. UNIT (HOST)	51	Select display units for density value data to be sent to host CPU via remote communications	g/ml	Select	kg/m^3, lb/gl, SGU, kg/l, g/l, lb/in^3, st/y^3	762
		LEV. UNIT	51	Select units for level value data displayed locally at NMS/NRF.	mm	Select	m, inch, cm, ft	765
		TEMP. UNIT	51	Select units for temperature data displayed locally at NMS/NRF	℃	Select	℃ °F °R °K	766
		DEN. UNIT	51	Select units for density value data displayed locally at NMS/NRF	g/ml	Select	kg/m^3, lb/gl, SGU, kg/l, g/l, lb/in^3, st/y^3	767
	HART LINE	NMT	777	Select Terminal Port A (Ex ia) or Terminal Port B (Ex d) for 770 the NMT connection	TERMINAL PORT B	Select	TERMINAL PORT B TERMINAL PORT A	770
		HART DEVICE (1)	777	Select Terminal Port A (Ex ia) or Terminal Port B (Ex d) for the HART Device 1.	TERMINAL PORT B	Select	TERMINAL PORT B TERMINAL PORT A	771
		HART DEVICE (2)	777	Select Terminal Port A (Ex ia) or Terminal Port B (Ex d) for the HART Device 2.	TERMINAL PORT B	Select	TERMINAL PORT B TERMINAL PORT A	772
		NMT HART Retry	530	Set HART retry number to change HART communication error detection time of connected NMT.	50	Set	0 - 99	773
	INTERFACE ADJUST	VOL. TOL. FOR I/F	51	Set Volume Tolerance for Balance condition during Interface measurement.	0.3ml	Set	0.0 - 99.9ml	780
		BRAKE RATE	51	Used for Interface Measurement. Increase Brake Rate to make the balance zone smaller and decrease interface measurement time.	150	Set	1 - 255	781
		BALANCE COUNT	51	Used for Interface Measurement. Balance signal is generated after motor movement changes from fast to slow specified number of times. Coordinate this setting with G2V9H9 Balance Delay setting.	15	Set	0 - 255	782
		IF 1 OFFSET	51	Change this setting to correct Interface 1 level deviation.	0.0mm	Set	-9999.9 - 9999.9mm	783
		IF 2 OFFSET	51	Change this setting to correct Interface 2 level deviation.	0.0mm	Set	-9999.9 - 9999.9mm	784

Matrix Group	Function Group	Item	Access Code	Short Description	Default Value	Set/Select /Display	Possible Entries	Index No. GVH
TANK PROFILE	PROFILE OPE.	OPE. SELECT	51	Select method for density measurement. 0 Spot Upper Density Measurement 1 Tank Profile Density Profile Measurement 2 I/F Profile Interface Density Profile 3 MANU. I/F Profile Manual Interface Profile	0:Spot	Select	0:Spot 1:Tank Profile 2:I/F Profile 3:MANU. I/F Profile	840
		OPE. POINT	51	Set the number of measurement points for Tank Profile measurement.	2	Set	16-Feb	841
		I/F MANU. LEVEL	51	Manually set the water interface level to be referenced during Tank Profile measurement.	0.0mm	Set	0.0 - 99999.9mm	843
		BAL. LEVEL	51	Set the allowance for level movement prior to Tank Profile operation. If level movement exceeds this value, Profile operation is cancelled. Setting 99.9mm allows Profile measurement to proceed, regardless of level movement.	2.0mm	Set	1.0 - 99.9mm	844
		UP WAIT TIME	51	Set waiting time for displacer weight to be measured in air, when making the weight table at start of Profile operation.	1min.	Set	1 - 31min	845
		LIQ. WAIT TIME	51	Set the time for displacer to stop at each measurement position during profile operation.	1min.	Set	1 - 31min	846
		OPE. WAIT TIME	51	E.g. if level movmenet exceeds setting at G8V4H4, Proservo is in "stand by" for the time set in this matrix. After the maximum time elapses, profile operation is cancelled.	1min.	Set	1 - 31min	847

⚠ CAUTION

Data in G8V4H0 to G8V4H9 are used for both Tank and Interface Profile measurement

Matrix Group	Function Group	Item	Access Code	Short Description	Default Value	Set/Select /Display	Possible Entries	Index No. GVH
TANK PROFILE	STARUS/DATA	OPE. STATUS	-	Displays profile operation status. 0 Accepting — Accepting density profile command. 1 Standby — Ready to execute density profile command. 2 In Operation — Executing density profile command. 3 OPR. END — Density profile operation completed successfully 4 UN BALANCE ERR — Fail: Required conditions for density profile operation not satisfied 5 OPR. ERR. STOP — Fail: Abnormal conditions occurred during density profile		Display		850
		LEVEL CONDITION	-	Displays status of liquid level/surface monitored prior to profile operation. 0 Off Level Meas. — Active operation is not level (profile cannot start). 1 Stable — Liquid level/surface is stable (profile can start). 2 Unstable — Liquid level/surface is unstable (profile cannot start). 3 Ignore Condition — Ignore liquid level/surface condition (profile cannot start).		Display		851
		OPE. TIME	-	Displays time when Tank Profile operation finished (DD/HH/MM).	DDHHMM	Display	000000 - 312359	852
		AVERAGE DENSITY	-	Displays average density value.	0.000g/ml	Display	0.000 - 9.999g/ml	854
		AVERAGE TEMP.	-	Displays average temperature value.	0.0°C	Display		855

Matrix Group	Function Group	Item	Access Code	Short Description	Default Value	Set/Select /Display	Possible Entries	Index No. GVH
TANK PROFILE	DENSITY 1 - 10	No.1 DENSITY	-	Displays density values for point No.1 in density profile	0.000g/ml	Display	0.000 - 9.999g/ml	860
		No.2 DENSITY	-	Displays density values for point No.2 in density profile	0.000g/ml	Display	0.000 - 9.999g/ml	861
		No.3 DENSITY	-	Displays density values for point No.3 in density profile	0.000g/ml	Display	0.000 - 9.999g/ml	862
		No.4 DENSITY	-	Displays density values for point No.4 in density profile	0.000g/ml	Display	0.000 - 9.999g/ml	863
		No.5 DENSITY	-	Displays density values for point No.5 in density profile	0.000g/ml	Display	0.000 - 9.999g/ml	864
		No.6 DENSITY	-	Displays density values for point No.6 in density profile	0.000g/ml	Display	0.000 - 9.999g/ml	865
		No.7 DENSITY	-	Displays density values for point No.7 in density profile	0.000g/ml	Display	0.000 - 9.999g/ml	866
		No.8 DENSITY	-	Displays density values for point No.8 in density profile	0.000g/ml	Display	0.000 - 9.999g/ml	867
		No.9 DENSITY	-	Displays density values for point No.9 in density profile	0.000g/ml	Display	0.000 - 9.999g/ml	868
		No.10 DENSITY	-	Displays density values for point No.10 in density profile	0.000g/ml	Display	0.000 - 9.999g/ml	869
	DENSITY 11 - 16	No.11 DENSITY	-	Displays density values for point No.11 in density profile	0.000g/ml	Display	0.000 - 9.999g/ml	870
		No.12 DENSITY	-	Displays density values for point No.12 in density profile	0.000g/ml	Display	0.000 - 9.999g/ml	871
		No.13 DENSITY	-	Displays density values for point No.13 in density profile	0.000g/ml	Display	0.000 - 9.999g/ml	872
		No.14 DENSITY	-	Displays density values for point No.14 in density profile	0.000g/ml	Display	0.000 - 9.999g/ml	873
		No.15 DENSITY	-	Displays density values for point No.15 in density profile	0.000g/ml	Display	0.000 - 9.999g/ml	874
		No.16 DENSITY	-	Displays density values for point No.16 in density profile	0.000g/ml	Display	0.000 - 9.999g/ml	875

Matrix Group	Function Group	Item	Access Code	Short Description	Default Value	Set/Select /Display	Possible Entries	Index No. GVH
TANK PROFILE	POSITION 1 - 10	NO.1 POSITION	-	Displays position No.1 of measurement taken during density profile.	0.0mm	Display	0.0 - 99999.9mm	880
		NO.2 POSITION	-	Displays position No.2 of measurement taken during density profile.	0.0mm	Display	0.0 - 99999.9mm	881
		NO.3 POSITION	-	Displays position No.3 of measurement taken during density profile.	0.0mm	Display	0.0 - 99999.9mm	882
		NO.4 POSITION	-	Displays position No.4 of measurement taken during density profile.	0.0mm	Display	0.0 - 99999.9mm	883
		NO.5 POSITION	-	Displays position No.5 of measurement taken during density profile.	0.0mm	Display	0.0 - 99999.9mm	884
		NO.6 POSITION	-	Displays position No.6 of measurement taken during density profile.	0.0mm	Display	0.0 - 99999.9mm	885
		NO.7 POSITION	-	Displays position No.7 of measurement taken during density profile.	0.0mm	Display	0.0 - 99999.9mm	886
		NO.8 POSITION	-	Displays position No.8 of measurement taken during density profile.	0.0mm	Display	0.0 - 99999.9mm	887
		NO.9 POSITION	-	Displays position No.9 of measurement taken during density profile.	0.0mm	Display	0.0 - 99999.9mm	888
		NO.10 POSITION	-	Displays position No.10 of measurement taken during density profile.	0.0mm	Display	0.0 - 99999.9mm	889
	POSITION 11 - 16	NO.11 POSITION	-	Displays position No.11 of measurement taken during density profile.	0.0mm	Display	0.0 - 99999.9mm	890
		NO.12 POSITION	-	Displays position No.12 of measurement taken during density profile.	0.0mm	Display	0.0 - 99999.9mm	891
		NO.13 POSITION	-	Displays position No.13 of measurement taken during density profile.	0.0mm	Display	0.0 - 99999.9mm	892
		NO.14 POSITION	-	Displays position No.14 of measurement taken during density profile.	0.0mm	Display	0.0 - 99999.9mm	893
		NO.15 POSITION	-	Displays position No.15 of measurement taken during density profile.	0.0mm	Display	0.0 - 99999.9mm	894
		NO.16 POSITION	-	Displays position No.16 of measurement taken during density profile.	0.0mm	Display	0.0 - 99999.9mm	895

Matrix Group	Function Group	Item	Access Code	Short Description	Default Value	Set/Select /Display	Possible Entries	Index No. GVH
I/F PROFILE	STATUS/DATA	OPE. STATUS	-	Displays profile operation status. 0 Accepting — Accepting density profile command. 1 Standby — Ready to execute density profile command. 2 In Operation — Executing density profile command. 3 OPR. END — Density profile operation completed successfully 4 UN BALANCE ERR — Fail: Required conditions for density profile operation not satisfied 5 OPR. ERR. STOP — Fail: Abnormal conditions occurred during density profile		Display		950
		LEVEL CONDITION	-	Displays status of liquid level/surface monitored prior to profile operation. 0 Off Level Meas. — Active operation is not level (profile cannot start). 1 Stable — Liquid level/surface is stable (profile can start). 2 Unstable — Liquid level/surface is unstable (profile cannot start). 3 Ignore Condition — Ignore liquid level/surface condition (profile cannot start).		Display		951
		OPE. TIME	-	Displays time when Interface Profile operation finished (DD/HH/MM).	DDHHMM	Display	000000 - 312359	952
		I/F LEVEL	-	Displays interface level used for Interface Profile measurement.	0.0mm	Display	0.0 - 99999.9mm	953
		AVERAGE DENSITY	-	Displays average density value calculated from Interface Profile measurement.	0.000g/ml	Display	0.000 - 9.999g/ml	954
		AVERAGE TEMP.	-	Displays average temperature value calculated from Interface Profile measurement.	0.0°C	Display		955

Matrix Group	Function Group	Item	Access Code	Short Description	Default Value	Set/Select /Display	Possible Entries	Index No. GVH
I/F PROFILE	DENSITY 1 - 10	No.1 DENSITY	-	Displays density values for point No.1 in density profile	0.000g/ml	Display	0.000 - 9.999g/ml	960
		No.2 DENSITY	-	Displays density values for point No.2 in density profile	0.000g/ml	Display	0.000 - 9.999g/ml	961
		No.3 DENSITY	-	Displays density values for point No.3 in density profile	0.000g/ml	Display	0.000 - 9.999g/ml	962
		No.4 DENSITY	-	Displays density values for point No.4 in density profile	0.000g/ml	Display	0.000 - 9.999g/ml	963
		No.5 DENSITY	-	Displays density values for point No.5 in density profile	0.000g/ml	Display	0.000 - 9.999g/ml	964
		No.6 DENSITY	-	Displays density values for point No.6 in density profile	0.000g/ml	Display	0.000 - 9.999g/ml	965
		No.7 DENSITY	-	Displays density values for point No.7 in density profile	0.000g/ml	Display	0.000 - 9.999g/ml	966
		No.8 DENSITY	-	Displays density values for point No.8 in density profile	0.000g/ml	Display	0.000 - 9.999g/ml	967
		No.9 DENSITY	-	Displays density values for point No.9 in density profile	0.000g/ml	Display	0.000 - 9.999g/ml	968
		No.10 DENSITY	-	Displays density values for point No.10 in density profile	0.000g/ml	Display	0.000 - 9.999g/ml	969
	DENSITY 11 - 16	No.11 DENSITY	-	Displays density values for point No.11 in density profile	0.000g/ml	Display	0.000 - 9.999g/ml	970
		No.12 DENSITY	-	Displays density values for point No.12 in density profile	0.000g/ml	Display	0.000 - 9.999g/ml	971
		No.13 DENSITY	-	Displays density values for point No.13 in density profile	0.000g/ml	Display	0.000 - 9.999g/ml	972
		No.14 DENSITY	-	Displays density values for point No.14 in density profile	0.000g/ml	Display	0.000 - 9.999g/ml	973
		No.15 DENSITY	-	Displays density values for point No.15 in density profile	0.000g/ml	Display	0.000 - 9.999g/ml	974
		No.16 DENSITY	-	Displays density values for point No.16 in density profile	0.000g/ml	Display	0.000 - 9.999g/ml	975

Matrix Group	Function Group	Item	Access Code	Short Description	Default Value	Set/Select /Display	Possible Entries	Index No. GVH
I/F PROFILE	POSITION 1 - 10	NO.1 POSITION	-	Displays position No.1 of measurement taken during density profile.	0.0mm	Display	0.0 - 99999.9mm	980
		NO.2 POSITION	-	Displays position No.2 of measurement taken during density profile.	0.0mm	Display	0.0 - 99999.9mm	981
		NO.3 POSITION	-	Displays position No.3 of measurement taken during density profile.	0.0mm	Display	0.0 - 99999.9mm	982
		NO.4 POSITION	-	Displays position No.4 of measurement taken during density profile.	0.0mm	Display	0.0 - 99999.9mm	983
		NO.5 POSITION	-	Displays position No.5 of measurement taken during density profile.	0.0mm	Display	0.0 - 99999.9mm	984
		NO.6 POSITION	-	Displays position No.6 of measurement taken during density profile.	0.0mm	Display	0.0 - 99999.9mm	985
		NO.7 POSITION	-	Displays position No.7 of measurement taken during density profile.	0.0mm	Display	0.0 - 99999.9mm	986
		NO.8 POSITION	-	Displays position No.8 of measurement taken during density profile.	0.0mm	Display	0.0 - 99999.9mm	987
		NO.9 POSITION	-	Displays position No.9 of measurement taken during density profile.	0.0mm	Display	0.0 - 99999.9mm	988
		NO.10 POSITION	-	Displays position No.10 of measurement taken during density profile.	0.0mm	Display	0.0 - 99999.9mm	989
	POSITION 11 - 16	NO.11 POSITION	-	Displays position No.11 of measurement taken during density profile.	0.0mm	Display	0.0 - 99999.9mm	990
		NO.12 POSITION	-	Displays position No.12 of measurement taken during density profile.	0.0mm	Display	0.0 - 99999.9mm	991
		NO.13 POSITION	-	Displays position No.13 of measurement taken during density profile.	0.0mm	Display	0.0 - 99999.9mm	992
		NO.14 POSITION	-	Displays position No.14 of measurement taken during density profile.	0.0mm	Display	0.0 - 99999.9mm	993
		NO.15 POSITION	-	Displays position No.15 of measurement taken during density profile.	0.0mm	Display	0.0 - 99999.9mm	994
		NO.16 POSITION	-	Displays position No.16 of measurement taken during density profile.	0.0mm	Display	0.0 - 99999.9mm	995

15 Appendix

15.1 RS 485 MODBUS (COM- 5) terminator

Terminator switch setting procedure

1. RS- 485 Communication Module until 2008

Set all slide switch (four bits) turn to ON when termination is required.

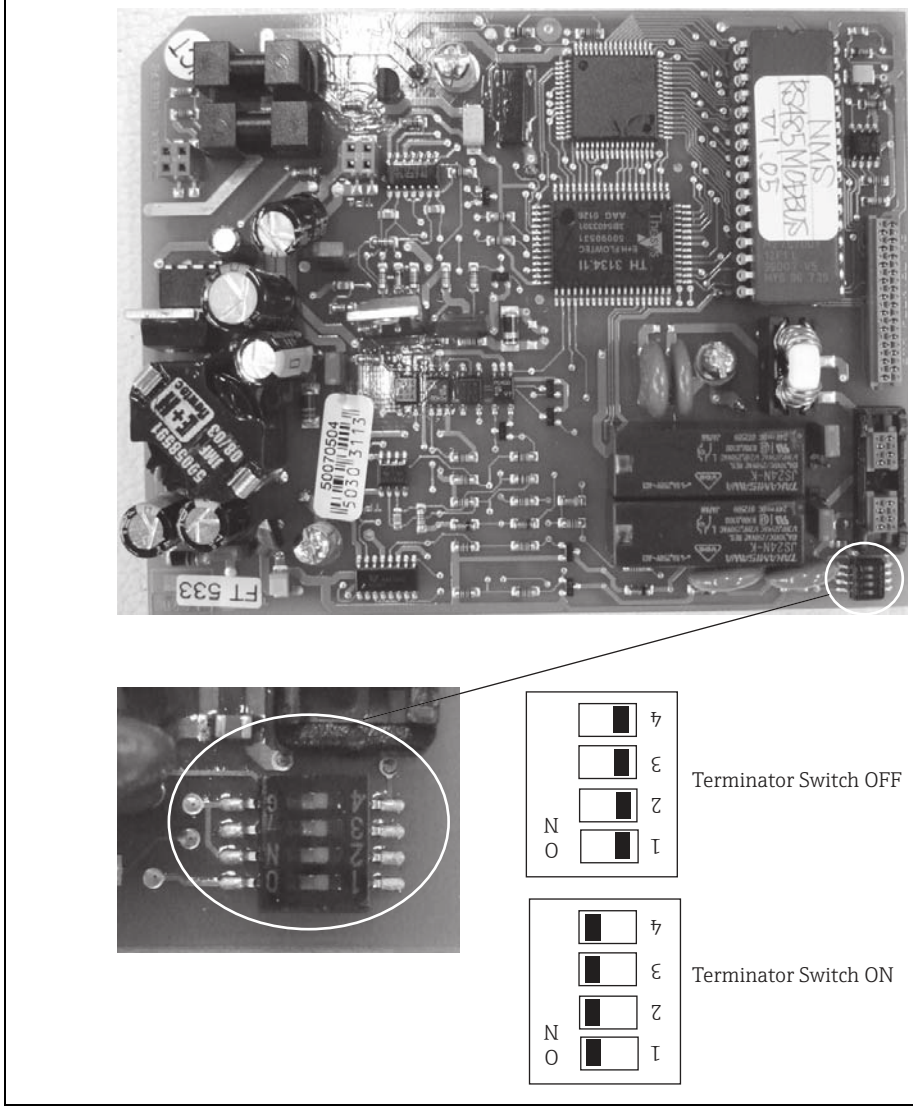

Figure 104: RS-485 communication module

2. COMM-5 RS- 485 Communication Module from 2009

Set piano type switch S1-1, S2-3, S2-4 to ON (UP) when termination is required.

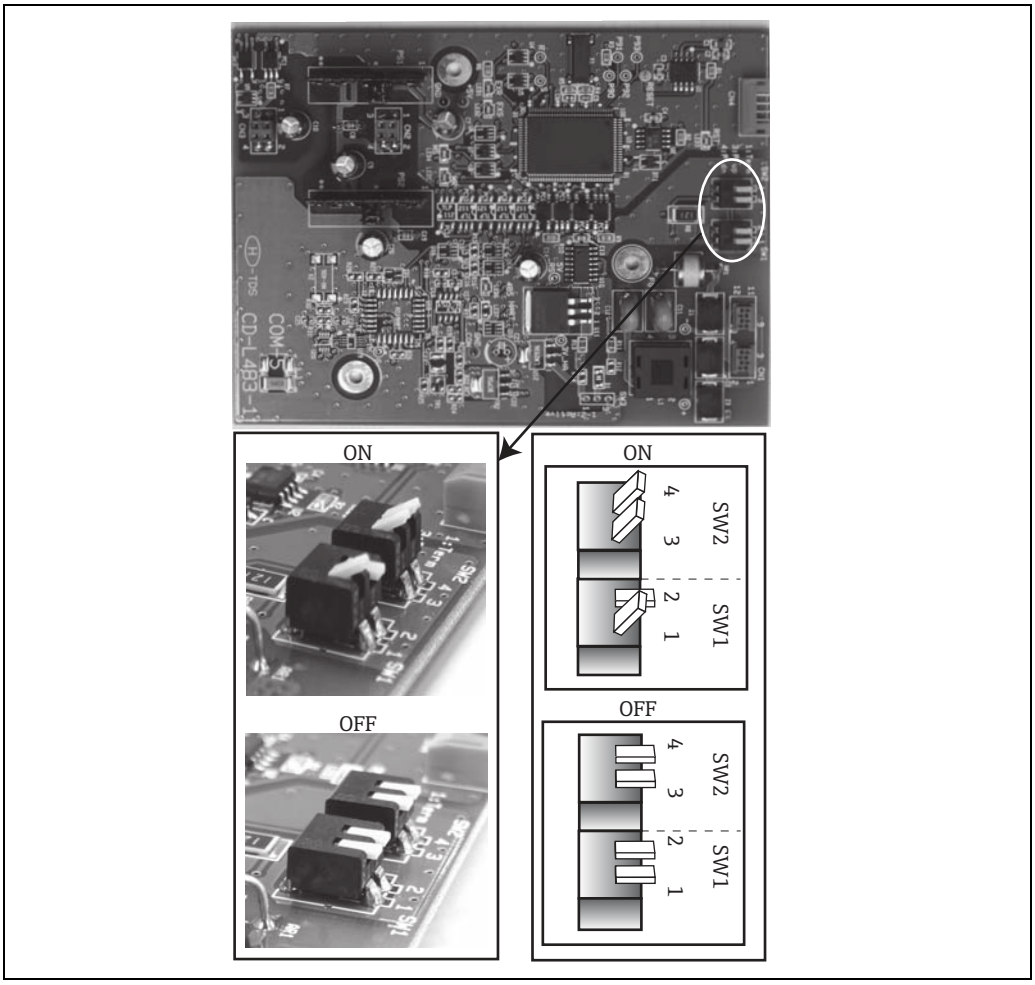

Figure 105: COM-5 RS-485 communication module

15.2 Measurement wire replacement

Procedure for winding wire onto wire drum

1. Prepare a box with approx. 300mm(w) × 300mm(d) × 50mm(h) for wire storing.
2. Take out the measurement wire from the plastic bag.
3. Put the wire into the box without twisting.
4. Put one end of the wire into a hole on the wire drum groove.
5. Fix the end of the wire by a screw.
6. Sit down on a chair.
7. Grasp the wire drum by left hand and hold the wire by left thumb.
8. Hold the wire by right thumb and index finger.
9. Make tension to secure the wire, so as not to come out of the groove.
10. Rotate the wire drum to wind the wire into groove with holding by left thumb.

This completes the winding wire onto wire drum procedure.

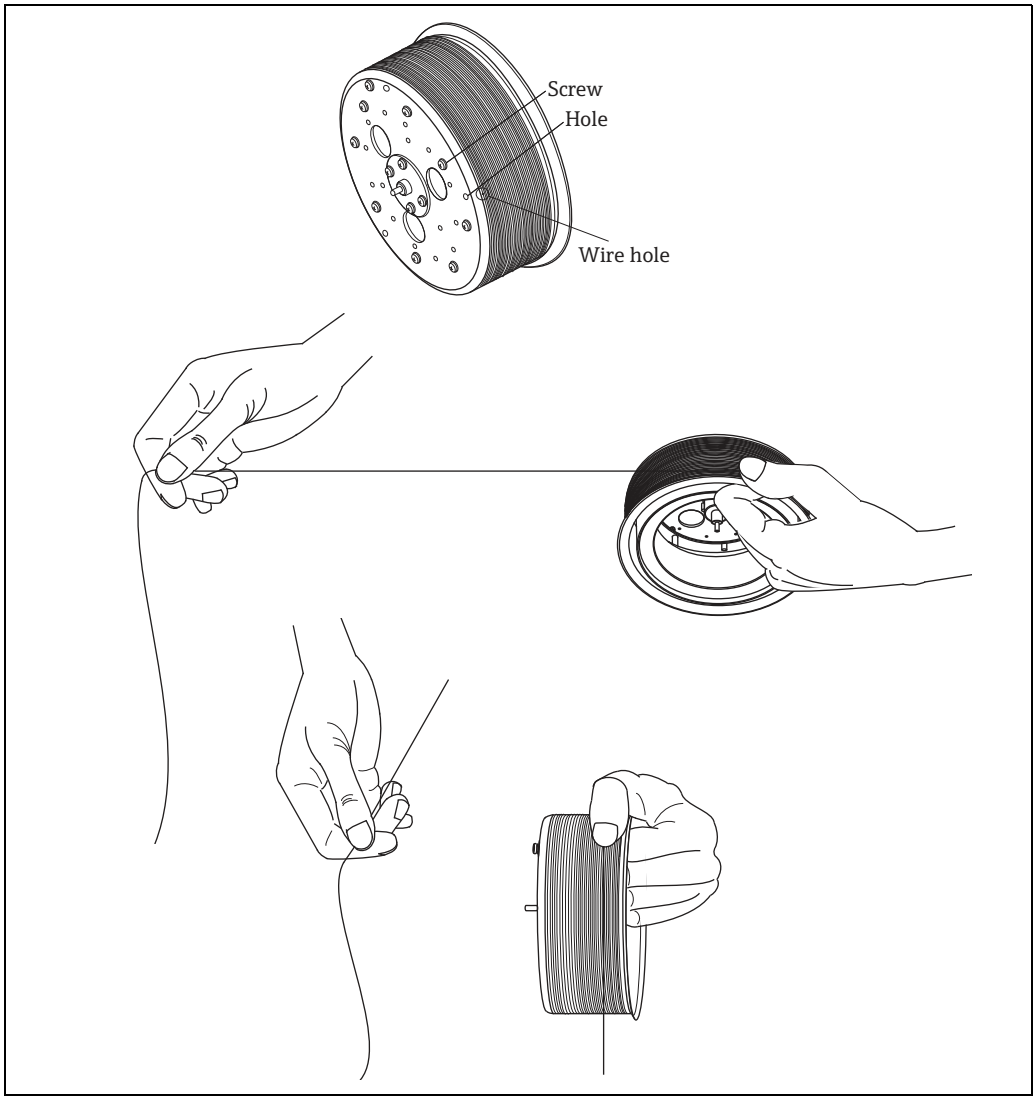

Figure 106: Measuring wire

Fixing wire procedure

1. Put the wire drum on the desk and fix the wire by masking tape remaining 500mm wire.

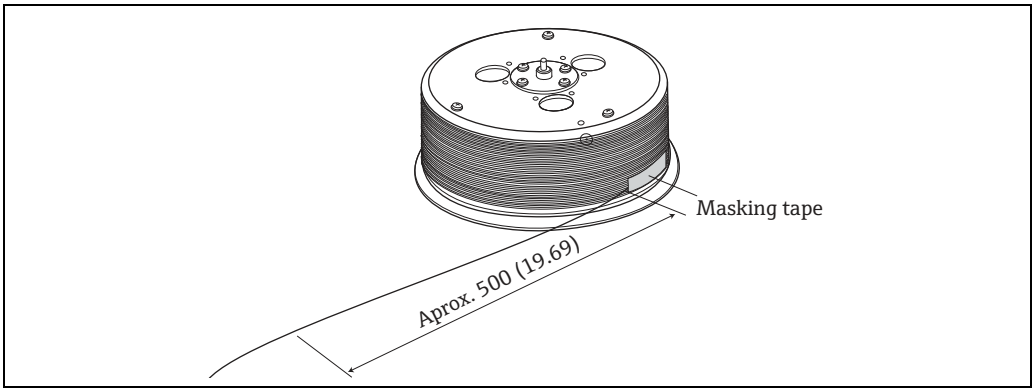

Figure 107: Wire and wire drum, unit of measurement: mm (in)

2. Wind the wire toward the wire drum 2 times around the ring.
3. Wind the wire 10 times.
4. Keep a space as the triangle shape and wind the wire 10 times toward arrow A.
5. Wind the wire 10 times toward arrow B.
   - Keep a certain amount of tension to the ring.
6. Wind the wire 10 times again.
7. Wind the wire 10 times toward arrow C.
8. Wind the wire 10 times toward arrow D.
   - Leave the wind approximately 100mm to 200mm to mount it on the displacer.

This completes the fixing wire procedure.

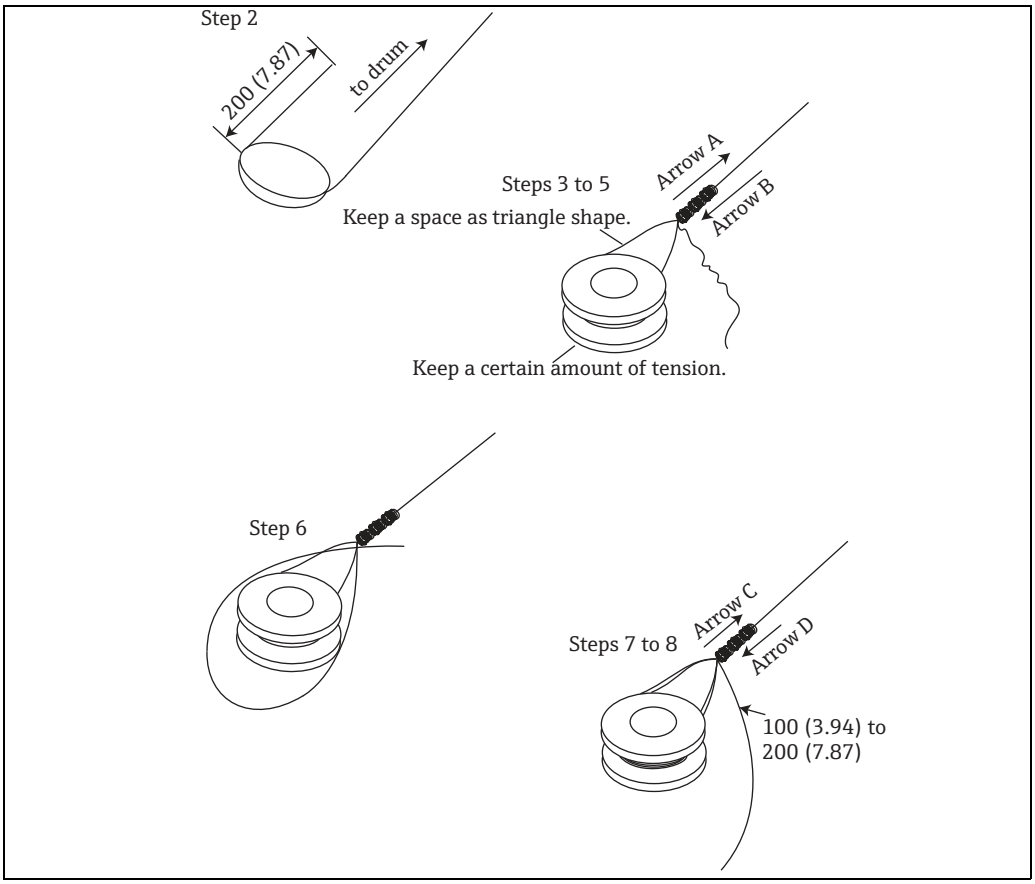

Figure 108: Fixing wire, unit of measurement: mm (in)

15.2.1 Displacers

Actual draft position may change slightly with tank parameters.

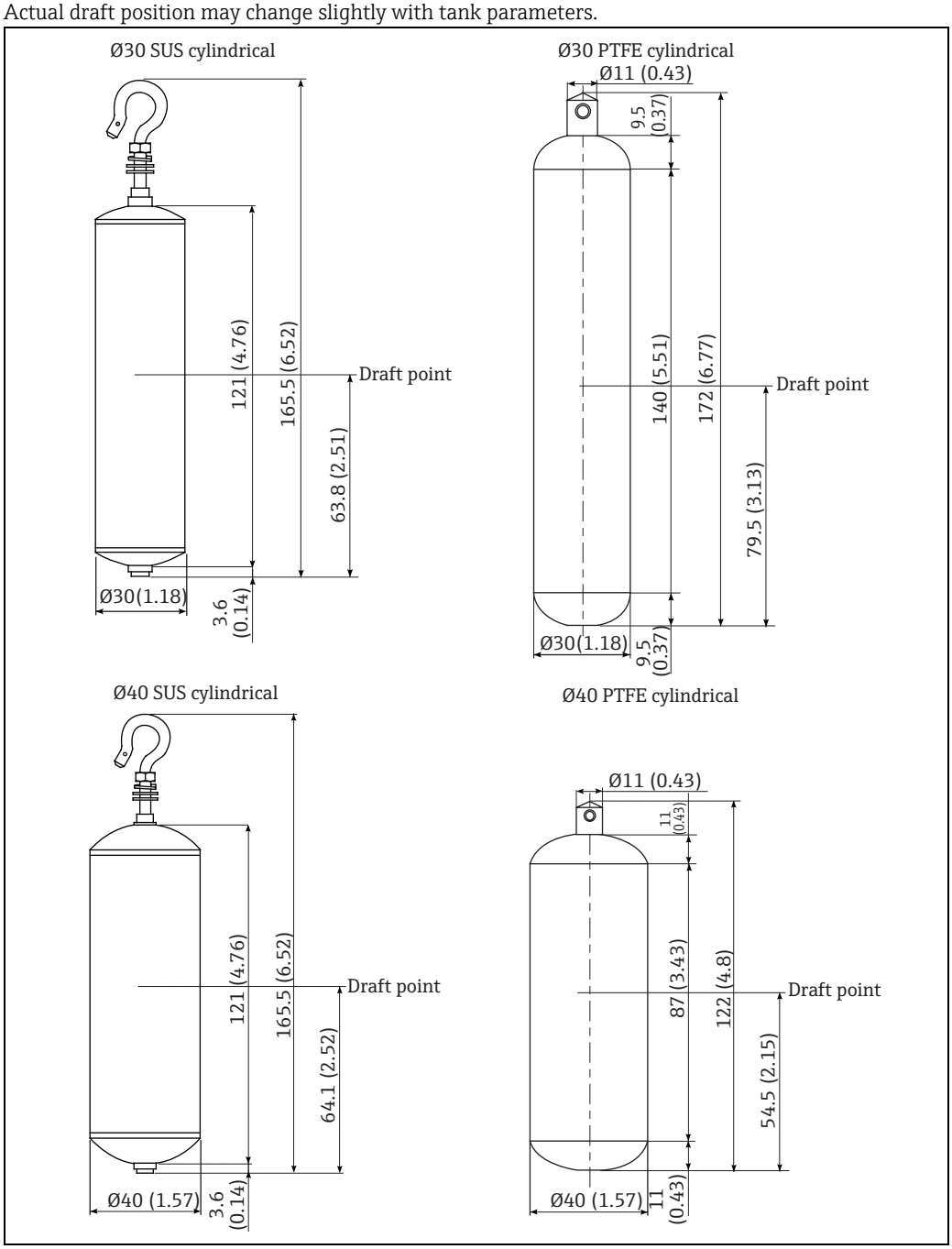

Figure 109: Dimension of Displacer 1, Unit of Measurement: mm (in)

Item	Ø30 SUS cylindrical	Ø30 PTFE cylindrical	Ø40 SUS cylindrical	Ø40 PTFE cylindrical
Weight (g)	261	261	254	280
Volume (ml)	85	85	152	126
Balance volume (ml)	41.3	41.3	71.1	62.6
Draft point (mm/(in))	63.8 (2.51)	63.8 (2.51)	64.1 (2.52)	54.5 (2.15)

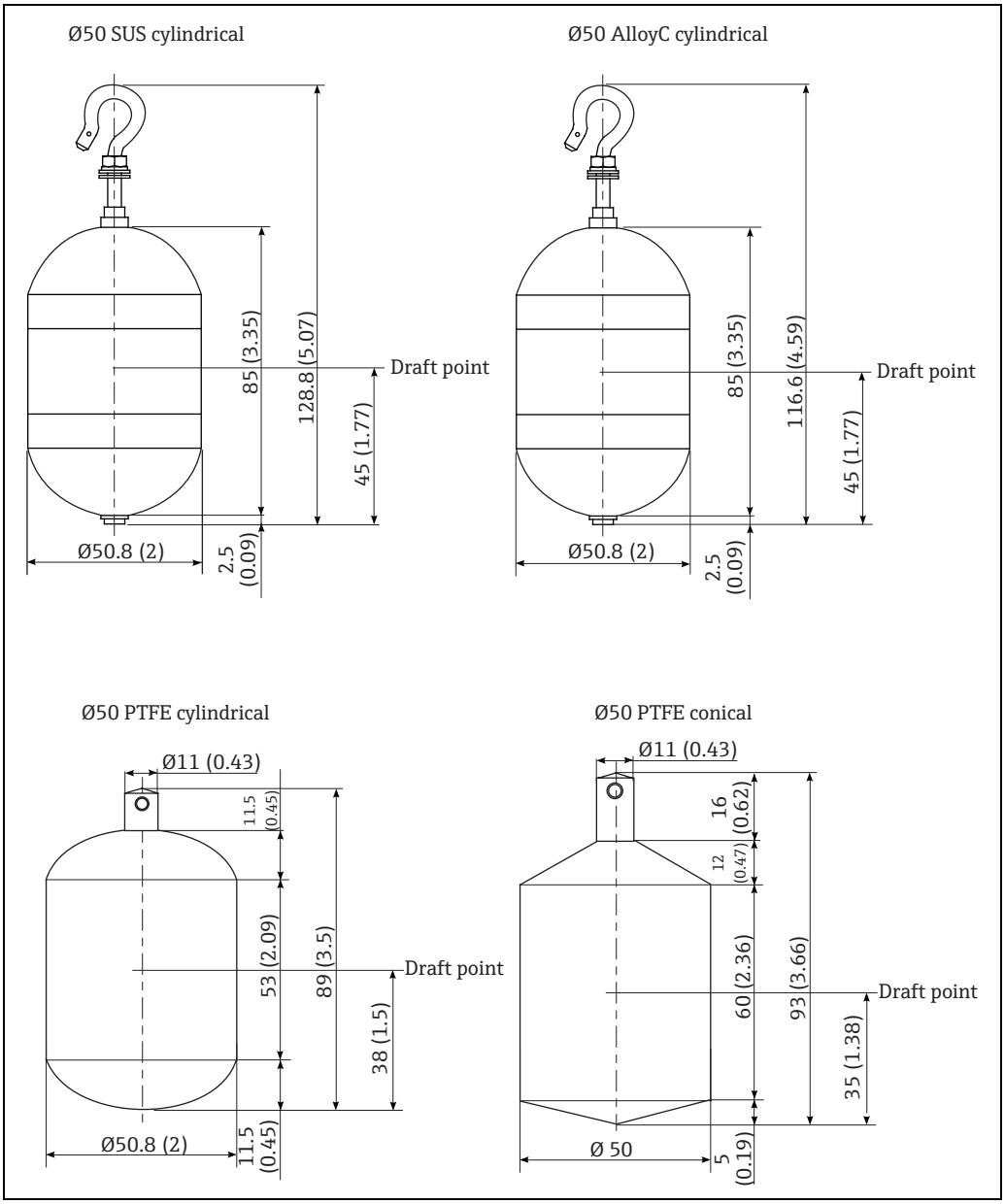

Figure 110: Dimension of Displacer 2, Unit of Measurement: mm (in)

Item	Ø50 SUS cylindrical	Ø50 Alloy C cylindrical	Ø50 PTFE cylindrical	Ø50 PTFE conical
Weight (g)	253	250	250	250
Volume (ml)	138	138	130	131
Balance volume (ml)	70.8	70.8	59	55.7
Draft point (mm/(in))	45 (1.77)	45 (1.77)	38 (1.5)	35 (1.38)

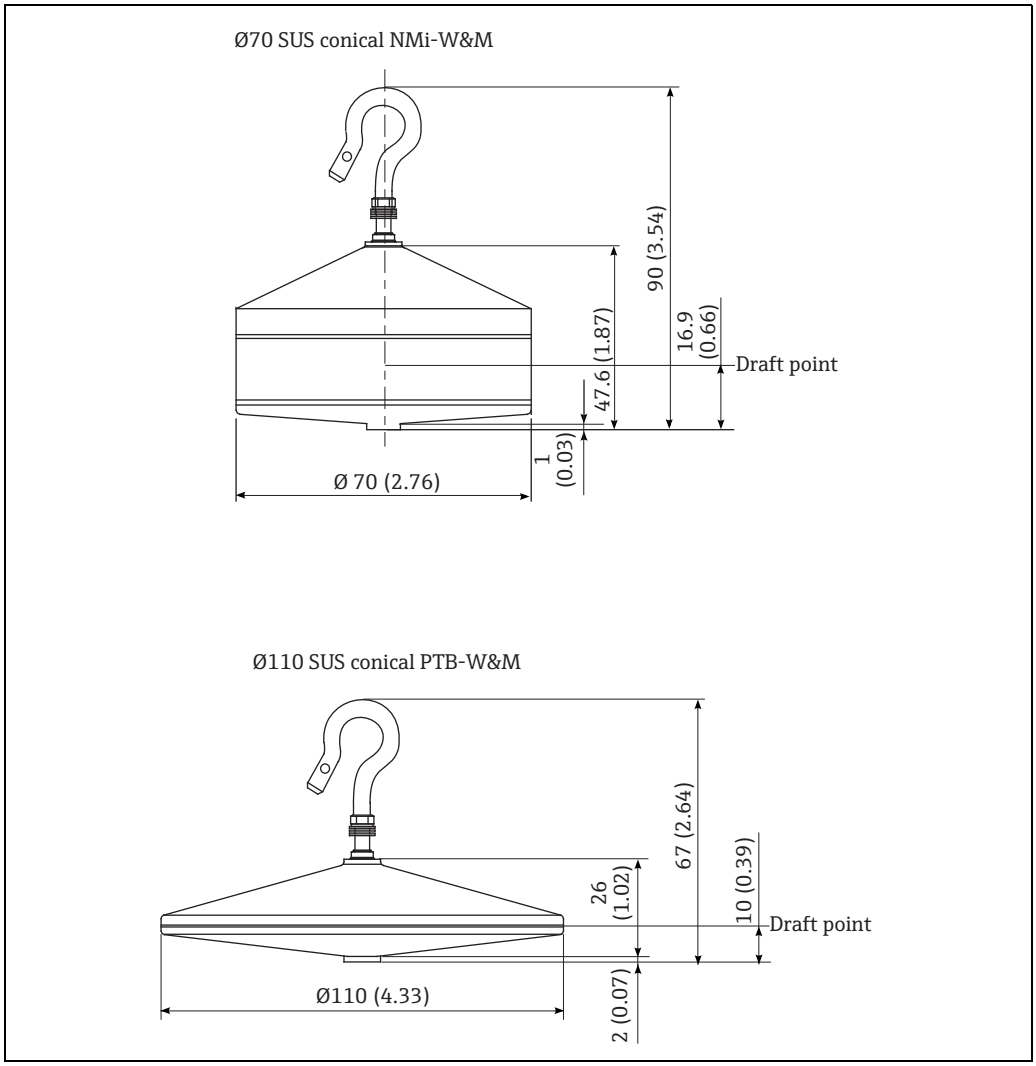

Figure 111: Dimension of displacer 3, unit of measurement: mm (in)

Item	Ø70 SUS conical NMi W&M	Ø110 SUS conical PTB W&M
Weight (g)	245	223
Volume (ml)	122	136
Balance volume (ml)	52.7	36.3
Draft point (mm/(in))	16.9 (0.77)	10 (0.39)

www.addresses.endress.com

Endress+Hauser

People for Process Automation