BA01916C/07/EN/03.20
71508512
2020-11-23

Operating Instructions
CPS47D/77D/97D

Memosens ISFET sensors for pH measurement

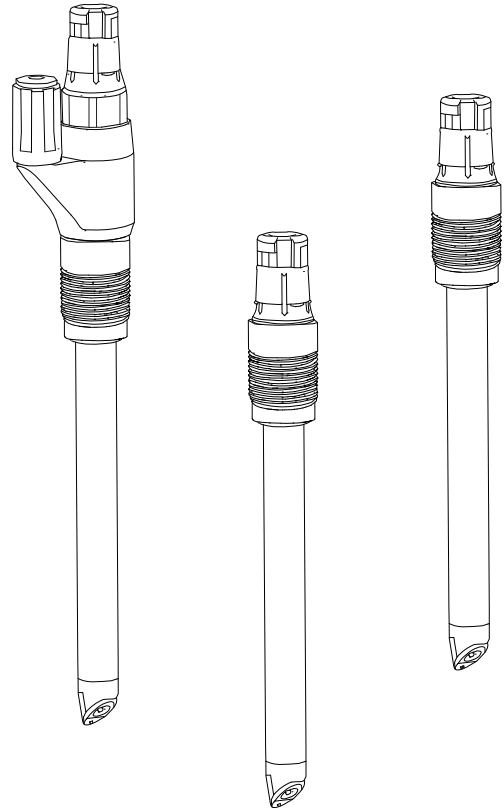

Endress+Hauser
People for Process Automation

Table of contents

1 About this document 4
1.1 Warnings 4
1.2 Symbols used 4
1.3 Documentation 5

2 Basic safety instructions 5
2.1 Requirements for personnel 5
2.2 Designated use 5
2.3 Workplace safety 6
2.4 Operational safety 6
2.5 Product safety 7

3 Incoming acceptance and product identification 7
3.1 Incoming acceptance 7
3.2 Product identification 7
3.3 Storage and transport 8
3.4 Scope of delivery 8
3.5 Certificates and approvals 8

4 Installation 9
4.1 Installation conditions 9
4.2 Post-installation check 11

5 Electrical connection 12

6 Commissioning 12
6.1 Preparatory steps 12

7 Maintenance 15
7.1 Maintenance tasks 15

8 Repair 16
8.1 Return 16
8.2 Disposal 16

1 About this document

1.1 Warnings

Structure of information	Meaning
DANGER **Causes (/consequences)** If necessary, Consequences of non-compliance (if applicable) ▶ Corrective action	This symbol alerts you to a dangerous situation. Failure to avoid the dangerous situation **will** result in a fatal or serious injury.
WARNING **Causes (/consequences)** If necessary, Consequences of non-compliance (if applicable) ▶ Corrective action	This symbol alerts you to a dangerous situation. Failure to avoid the dangerous situation **can** result in a fatal or serious injury.
CAUTION **Causes (/consequences)** If necessary, Consequences of non-compliance (if applicable) ▶ Corrective action	This symbol alerts you to a dangerous situation. Failure to avoid this situation can result in minor or more serious injuries.
NOTICE **Cause/situation** If necessary, Consequences of non-compliance (if applicable) ▶ Action/note	This symbol alerts you to situations which may result in damage to property.

1.2 Symbols used

Symbol	Meaning
	Additional information, tips
	Permitted or recommended
	Not permitted or not recommended
	Reference to device documentation
	Reference to page
	Reference to graphic
	Result of a step

1.2.1 Symbols on the device

Symbol	Meaning
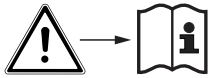	Reference to device documentation
	Do not dispose of products bearing this marking as unsorted municipal waste. Instead, return them to the manufacturer for disposal under the applicable conditions.

1.3 Documentation

The following manuals which complement these Operating Instructions can be found on the product pages on the Internet:
- Technical Information for the relevant sensor
- Operating Instructions for the transmitter used

Safety instructions for electrical apparatus in hazardous area, Memosens ISFET pH sensors, XA02279C

2 Basic safety instructions

2.1 Requirements for personnel

- Installation, commissioning, operation and maintenance of the measuring system may be carried out only by specially trained technical personnel.
- The technical personnel must be authorized by the plant operator to carry out the specified activities.
- The electrical connection may be performed only by an electrical technician.
- The technical personnel must have read and understood these Operating Instructions and must follow the instructions contained therein.
- Faults at the measuring point may only be rectified by authorized and specially trained personnel.

Repairs not described in the Operating Instructions provided must be carried out only directly at the manufacturer's site or by the service organization.

2.2 Designated use

The sensors are designed for the continuous measurement of the pH value in liquids.

Detailed information on the applications is provided in the Technical Information for the sensors.

CPS47D:
- Long-term monitoring or limit monitoring in process engineering
  - Chemical processes
  - Organic chemistry with high levels of organic solvents
  - Low conductivities
  - Clogging media
  - Incinerator plants
- Water treatment
  Water with low conductivity for Food and Life Sciences

CPS77D:
Hygienic and sterile applications (sterilizable, autoclavable)
- Fermenters
- Biotechnology
- Pharmaceutical industry
- Foods

CPS97D:
- Contaminated media and suspended solids
  - Dispersions
  - Precipitation reactions
  - Emulsions
- Process technology and monitoring of processes with:
  Rapidly changing pH values
- Chemical processes
- Pulp and paper industry

Use of the device for any purpose other than that described, poses a threat to the safety of people and of the entire measuring system and is therefore not permitted.

The manufacturer is not liable for damage caused by improper or non-designated use.

2.3 Workplace safety

As the user, you are responsible for complying with the following safety conditions:
- Installation guidelines
- Local standards and regulations
- Regulations for explosion protection

2.4 Operational safety

Before commissioning the entire measuring point:

1. Verify that all connections are correct.
2. Ensure that electrical cables and hose connections are undamaged.
3. Do not operate damaged products, and protect them against unintentional operation.
4. Label damaged products as defective.

During operation:

▶ If faults cannot be rectified:
products must be taken out of service and protected against unintentional operation.

2.5 Product safety

2.5.1 State-of-the-art technology

The product is designed to meet state-of-the-art safety requirements, has been tested, and left the factory in a condition in which it is safe to operate. The relevant regulations and international standards have been observed.

3 Incoming acceptance and product identification

3.1 Incoming acceptance

1. Verify that the packaging is undamaged.
   ↳ Notify the supplier of any damage to the packaging.
   Keep the damaged packaging until the issue has been resolved.
2. Verify that the contents are undamaged.
   ↳ Notify the supplier of any damage to the delivery contents.
   Keep the damaged goods until the issue has been resolved.
3. Check that the delivery is complete and nothing is missing.
   ↳ Compare the shipping documents with your order.
4. Pack the product for storage and transportation in such a way that it is protected against impact and moisture.
   ↳ The original packaging offers the best protection.
   Make sure to comply with the permitted ambient conditions.

If you have any questions, please contact your supplier or your local Sales Center.

3.2 Product identification

3.2.1 Nameplate

The nameplate provides you with the following information on your device:
- Manufacturer details
- Order code
- Serial number
- Operating conditions
- Safety information and warnings

▶ Compare the information on the nameplate with the order.

3.2.2 Product identification

Interpreting the order code

The order code and serial number of your product can be found in the following locations:
- On the nameplate
- In the delivery papers

Obtaining information on the product

1. Go to www.endress.com.
2. Call up the site search (magnifying glass).
3. Enter a valid serial number.
4. Search.
   ↳ The product structure is displayed in a popup window.
5. Click on the product image in the popup window.
   ↳ A new window (**Device Viewer**) opens. All of the information relating to your device is displayed in this window as well as the product documentation.

3.2.3 Manufacturer's address

Endress+Hauser Conducta GmbH+Co. KG
Dieselstraße 24
D-70839 Gerlingen

3.3 Storage and transport

- ▶ All sensors are individually tested and supplied in individual packs.
- ▶ Sensors should be stored in dry rooms at temperatures of 0 to 50 °C (32 to 122 °F).

3.4 Scope of delivery

The delivery comprises:
- Sensor in the version ordered
- Operating Instructions
- Safety instructions for the hazardous area (for sensors with Ex approval)

3.5 Certificates and approvals

3.5.1 CE mark

The product meets the requirements of the harmonized European standards. As such, it complies with the legal specifications of the EU directives. The manufacturer confirms successful testing of the product by affixing to it the CE mark.

3.5.2 EAC

The product has been certified according to guidelines TP TC 004/2011 and TP TC 020/2011 which apply in the European Economic Area (EEA). The EAC conformity mark is affixed to the product.

4 Installation

4.1 Installation conditions

- Before screwing in the sensor, make sure the assembly thread, the O-rings and the sealing surface are clean and undamaged and that the thread runs smoothly.
- Pay attention to the installation instructions provided in the Operating Instructions of the assembly used.

▶ Screw in the sensor and tighten by hand with a torque of 3 Nm (2.21 lbf ft) (specifications only apply if installing in Endress+Hauser assemblies).

4.1.1 Orientation

Note the direction of medium flow when installing the sensor.

▶ Position the ISFET chip so that it is at an angle of approx. 30 to 45 ° to the flow direction (item 2) → 2, 10.
  ↳ Use the rotatable terminal head for this purpose.

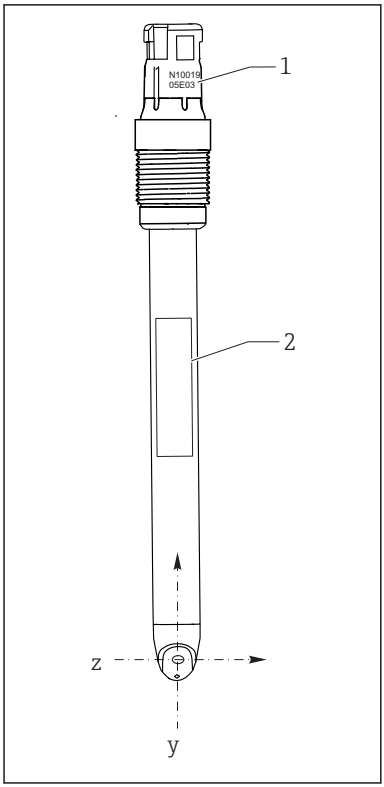

1 Sensor orientation, front view

1 Serial number
2 Nameplate

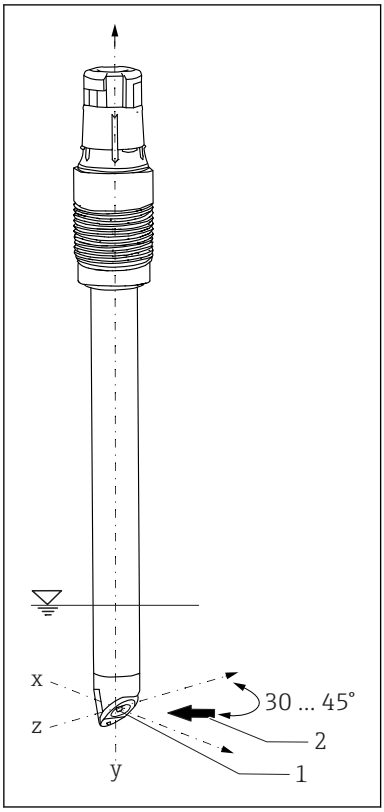

2 Sensor orientation, 3D view

1 ISFET chip
2 Direction of medium flow

NOTICE

Open aperture

Gel can escape from the sensor interior and resulting air bubbles can break the electrical contact!

► Exercise care when handling the sensor.

When installing the sensor in an assembly, use the serial number engraved on the terminal head to ensure correct sensor orientation → 1, 10. The engraving is always on the same plane as the ISFET chip and the nameplate (z-y direction).

ISFET sensors are not designed for use in abrasive media. If these sensors are nevertheless used in such applications, avoid direct flow to the chip. This increases the sensor operating life and improves the sensor drift behavior. The disadvantage is that the pH value displayed is not stable.

4.1.2 Installation instructions

ISFET sensors can be installed in any position because there is no liquid inner lead. However, in the event of upside-down installation an air bubble [1] may form in the reference system and interrupt the electrical contact between the medium and the junction reference.

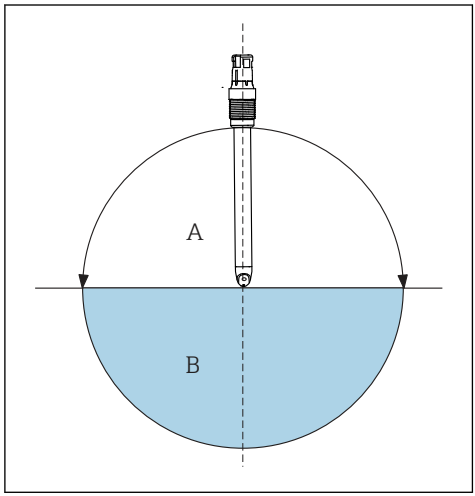

The installed sensor should remain in dry conditions for a maximum of 6 hours (also applies to upside-down installation).

3 Angle of installation

A Recommended
B Permitted, please pay careful attention to basic conditions!

1) The sensor is free of air bubbles when delivered from the factory. Air bubbles occur, however, when working with negative pressure, e.g. when emptying a tank.

4.2 Post-installation check

Put the sensor into operation only if you can answer "yes" to the following questions:
- Are the sensor and cable undamaged?
- Is the orientation correct?

5 Electrical connection

The sensor is connected to the transmitter via the Memosens data cable CYK10.

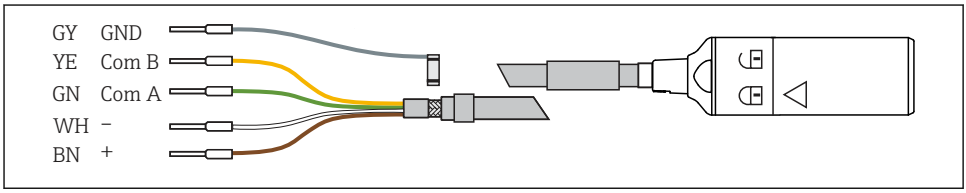

4 Memosens data cable CYK10

6 Commissioning

6.1 Preparatory steps

Before commissioning the sensor, remove the moistening cap with the bayonet lock:

1. Turn the top part of the moistening cap.

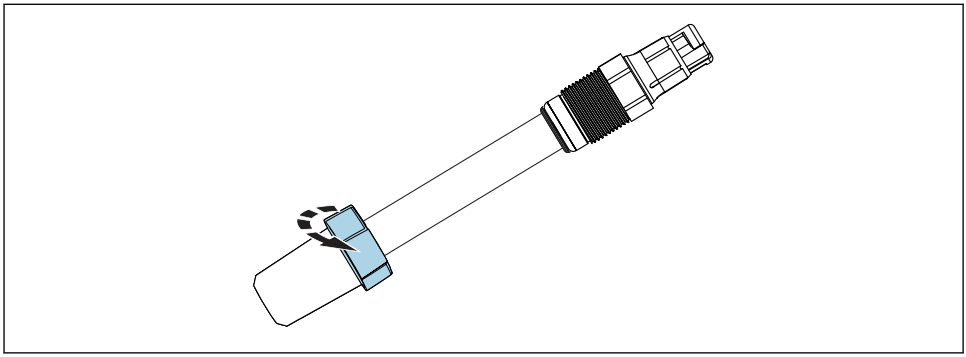

5 Releasing the moistening cap

2. Carefully remove the moistening cap from the sensor.

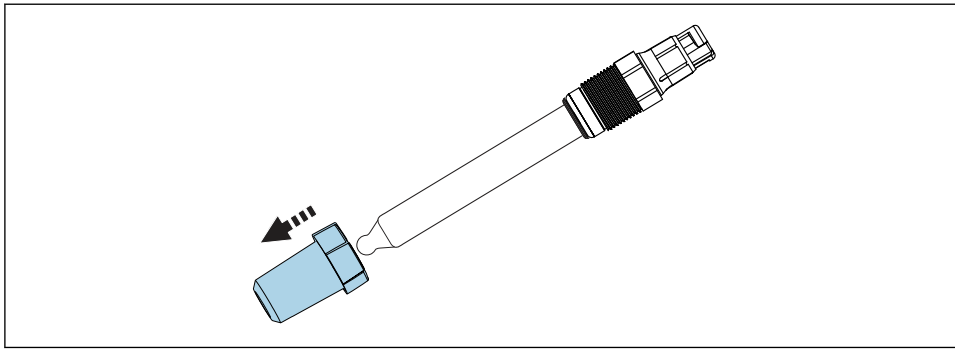

A0041482

6 Removing the moistening cap

6.1.1 Calibration and measurement

The frequency at which a sensor calibration or sensor inspection is performed depends on the operating conditions (fouling, chemical load).

ISFET sensors with Memosens technology do not need to be calibrated when connected for the first time. Calibration is only required if very strict accuracy requirements must be met, or if the sensor has been in storage for longer than 3 months.

Two-point calibration is required for ISFET sensors. Use a high-quality buffer from Endress+Hauser, e.g. CPY20, for this purpose.

1. Remove the moistening cap with the bayonet lock for calibration and measuring → 12.
2. If the moistening cap is no longer used to store the sensor, store the sensor in a KCl solution (3 mol/l) or buffer solution.

Do not store the sensor in distilled water.

ISFET sensors which are stored dry must be immersed in water for at least 15 minutes before use. A closed-control loop is created when the measuring system is switched on. The measured value adjusts to the real value during this time (5 to 8 minutes). This settling behavior occurs every time the film of liquid between the pH-sensitive semiconductor and the reference lead is interrupted. The settling time depends on the length of the interruption.

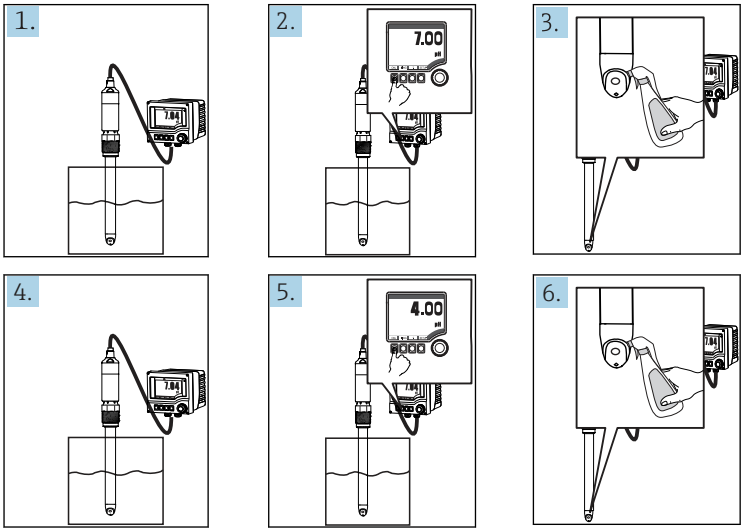

1. Immerse the sensor into a defined buffer solution (e.g. pH 7).

2. Perform the calibration at the transmitter:

(a) In the case of pH sensors and manual temperature compensation, set the measurement temperature.

(b) Enter the pH value of the buffer solution.

(c) Start calibration.

(d) The value is accepted once it has stabilized.

3. Rinse the sensor with distilled water. Do not dry the sensor!

4. Immerse the ISFET sensor into the second buffer solution (e.g. pH 4).

5. Perform the calibration at the transmitter:

(a) Enter the pH value of the second buffer solution.

(b) Start the calibration.

(c) The value is accepted once it has stabilized.

The device calculates the operating point and slope and displays the values. Once the adjustment values have been accepted, the device is adjusted to the new ISFET sensor.

6. Rinse the ISFET sensor with distilled water.

7 Maintenance

7.1 Maintenance tasks

7.1.1 Cleaning the sensor

- Clean the sensor before each calibration.

WARNING

Hydrofluoric acid

Risk of serious or fatal injury from caustic burns!

- Wear goggles to protect eyes.
- Wear protective gloves and appropriate protective clothing.
- Avoid all contact with the eyes, mouth and skin.
- If using hydrofluoric acid, use plastic vessels only.

WARNING

Thiocarbamide

Harmful if swallowed! Limited evidence of carcinogenicity! Possible risk of harm to the unborn child! Dangerous for the environment with long-term effects!

- Wear protective goggles, protective gloves and appropriate protective clothing.
- Avoid all contact with the eyes, mouth and skin.
- Avoid discharge into the environment.

Clean away fouling on the sensor as follows depending on the type of fouling:

1. Oily and greasy films:
   Clean with a grease remover, e.g. alcohol, or hot water and (alkaline) substances containing surfactants (e.g. dishwashing detergent).
2. Lime, cyanide and metal hydroxide buildup and low solubility (lyophobic) organic buildup:
   Dissolve buildup with diluted hydrochloric acid (3 %) and then rinse thoroughly with plenty of clear water.
3. Sulfidic buildup (from flue gas desulfurization or wastewater treatment plants):
   Use a mixture of hydrochloric acid (3 %) and thiocarbamide (commercially available) and then rinse thoroughly with plenty of clear water.
4. Buildup containing proteins (e.g. food industry):
   Use a mixture of hydrochloric acid (0.5 %) and pepsin (commercially available) and then rinse thoroughly with plenty of clear water.
5. NOTICE

   Pressurized water can damage the seal!

   - Do not direct pressurized water straight onto the chip.

   Fibers, suspended substances:

   Rinse with pressurized water or possibly with surface-active agents.

6. Readily soluble biological buildup:
   Rinse with pressurized water.
7. Sensors with very long response time:
   Use a mixture that contains hydrofluoric acid and consists of nitric acid (10%) and ammonium fluoride (50 g/l).

8 Repair

8.1 Return

The product must be returned if repairs or a factory calibration are required, or if the wrong product was ordered or delivered. As an ISO-certified company and also due to legal regulations, Endress+Hauser is obliged to follow certain procedures when handling any returned products that have been in contact with medium.

To ensure the swift, safe and professional return of the device:

- Refer to the website www.endress.com/support/return-material for information on the procedure and conditions for returning devices.

8.2 Disposal

The device contains electronic components. The product must be disposed of as electronic waste.

- Observe the local regulations.



If required by the Directive 2012/19/EU on waste electrical and electronic equipment (WEEE), the product is marked with the depicted symbol in order to minimize the disposal of WEEE as unsorted municipal waste. Do not dispose of products bearing this marking as unsorted municipal waste. Instead, return them to Endress+Hauser for disposal under the applicable conditions.



www.addresses.endress.com

Endress+Hauser

People for Process Automation