DATA SHEET

T 8310-1/4/5/6 EN

Pneumatic Actuators up to 750v2 cm²

Type 3271 · Type 3277 for integral positioner attachment

Application

Linear actuators particularly suitable for mounting on SAMSON Series 240, 250, 280, 290 and SMS Valves as well as Type 3510 Micro-flow Valves

Actuator area	**120 to 750v2 cm²**
Rated travel	**7.5 to 30 mm**



Fig. 1: *Type 3277-5, 120 cm², on micro-flow valves*



Fig. 2: *Type 3271*



Fig. 3: *Type 3271 with additional handwheel*



Fig. 4: *Type 3277-5, 120 cm², with additional handwheel*



Fig. 5: *Type 3271-5, 120 cm²*



Fig. 6: *Type 3277*

Special features

The Type 3271 and Type 3277 Pneumatic Actuators are diaphragm actuators with a rolling diaphragm and internal springs.

- Low overall height
- Powerful thrust at high stroking speed
- Low friction
- Various bench ranges by varying the number of springs or changing the spring compression
- No special tools required to change the bench range or reverse the direction of action (including actuator with handwheel)
- Permissible operating temperatures from -60 to +120 °C
- Direct attachment of accessories on additional yoke for Type 3277 with concealed travel pick-off

A safety manual containing the safety-related data is optionally available for use in safety-instrumented systems (SIL requirements).

Versions

- **Type 3271 · Pneumatic actuator, 175v2, 350, 350v2, 355v2 or 750v2 cm² actuator area**, optional as corrosion-resistant version made of stainless steel 1.4301 (not for 355v2 cm²)
- **Type 3277 · Pneumatic actuator for direct attachment of accessories, 175v2, 350, 350v2, 355v2 or 750v2 cm² actuator area**, optional as corrosion-resistant version made of stainless steel 1.4301 (not for 355v2 cm²)

SAMSON AKTIENGESELLSCHAFT
Weismüllerstraße 3 · 60314 Frankfurt am Main, Germany
Phone: +49 69 4009-0 · samson@samsongroup.com · www.samsongroup.com

Edition May 2026

- **Type 3271-5 · Pneumatic actuator, 120 cm² actuator area**, diaphragm cases made of die-cast aluminum
- **Type 3277-5 · Pneumatic actuator for direct attachment of accessories, 120 cm² actuator area**, diaphragm cases made of die-cast aluminum
- With (optional) **travel stop**, minimum or maximum travel mechanically adjustable
- v1 construction with **clamped-in diaphragm** (actuator area specified in cm², no extra identification)
- v2 construction with **full diaphragm** (identified by "v2" in addition to the specified actuator area)
- With **hand-operated actuator (top-mounted)** (optional) · See Data Sheet ▶ T 8312

Further versions

- Versions for **other control media** (e.g. water) available on request
- **Type 3273 Side-mounted Handwheel** for ≥175v2 cm² actuator areas · See Data Sheet ▶ T 8312
- **Combined version** with **handwheel** and **travel stops on both sides**

Design and principle of operation

The actuators mainly consist of two diaphragm cases, a rolling diaphragm with diaphragm plate and internal springs. Several springs may be fitted into one another.

The signal pressure p_{st} creates the force $F = p_{st} \cdot A$ at the diaphragm surface A, which is opposed by the springs in the actuator. The bench range is determined by the number of actuator springs used and their compression, taking into account the rated travel. The travel H is proportional to the signal pressure p_{st}. The direction of action of the actuator stem depends on how the springs are installed in the actuator and the location of the signal pressure connection.

The v2 actuator construction has a full rolling diaphragm.

The v1 actuator construction has a clamped-in diaphragm.

The stem connector clamps connect the actuator stem with the plug stem of the valve.

The actuator stem and plug stem of the micro-flow valve are connected using a threaded stem connection.

The travel of the version with an adjustable travel stop can be permanently limited by up to 50 % in both directions (actuator stem extends or retracts).

In contrast to the construction of the Type 3271 Actuator, the Type 3277 Actuator is fitted with an additional yoke on the bottom diaphragm case. The yoke allows the direct attachment of a positioner and/or limit switch. The benefit of this design is that the travel pick-off located inside the yoke is protected against external influences. Refer to the mounting and operating instructions of the valve accessories to be mounted for more details on their attachment and the parts required.

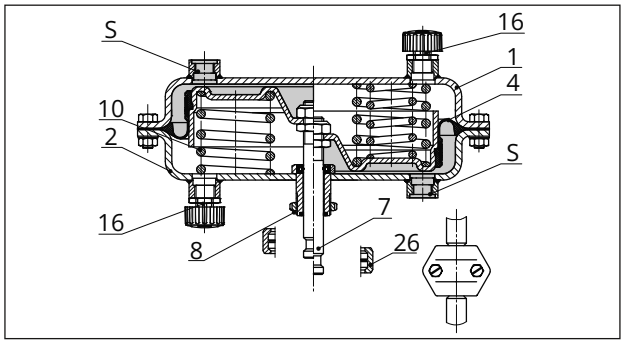

Fig. 7: *Type 3271 · Right: with additional springs*

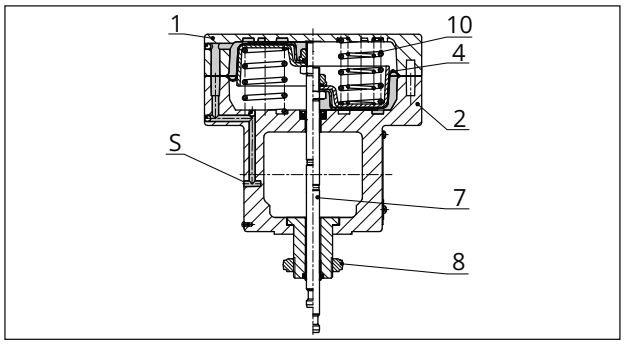

Fig. 8: *Type 3277-5 for direct attachment of accessories (120 cm²)*

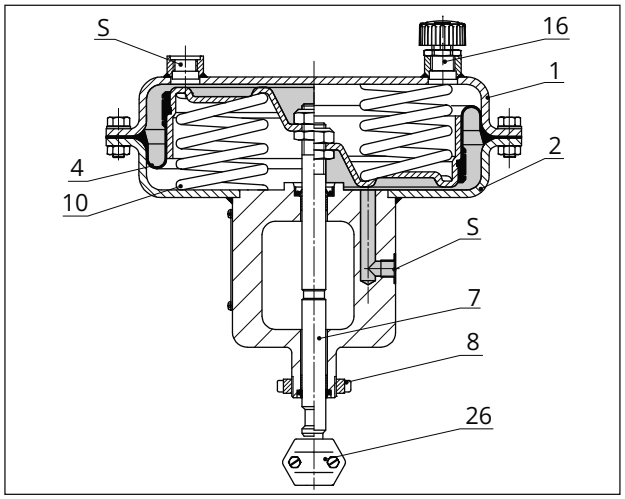

Fig. 9: *Type 3277 for direct attachment of accessories (example shows actuator with 350 cm²)*

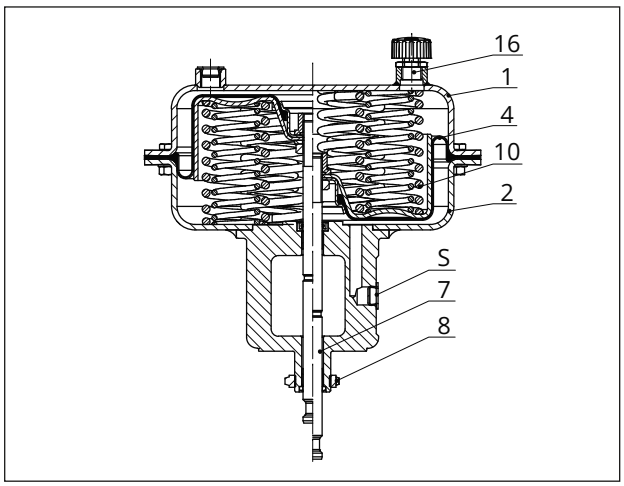

Fig. 10: *Type 3277 with additional springs (355v2 cm²)*

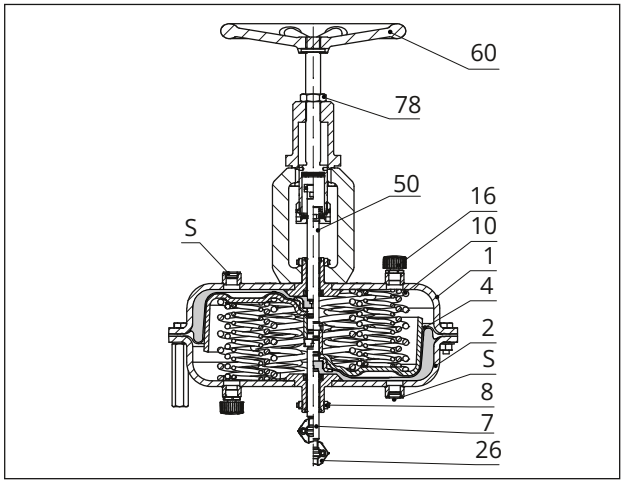

Fig. 11: *Type 3271, with additional handwheel (example shows actuator with 750v2 cm²)*

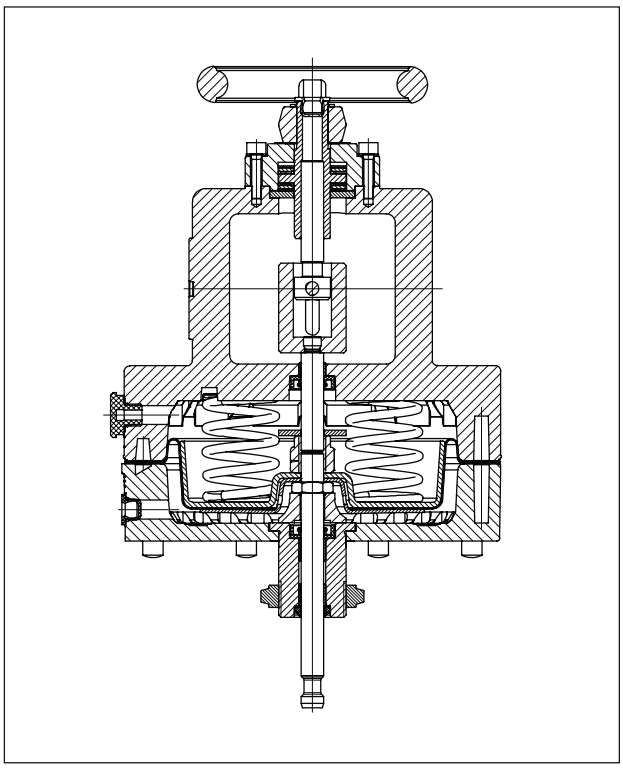

Fig. 12: *Type 3271-5, "actuator stem extends" fail-safe action, with additional handwheel*

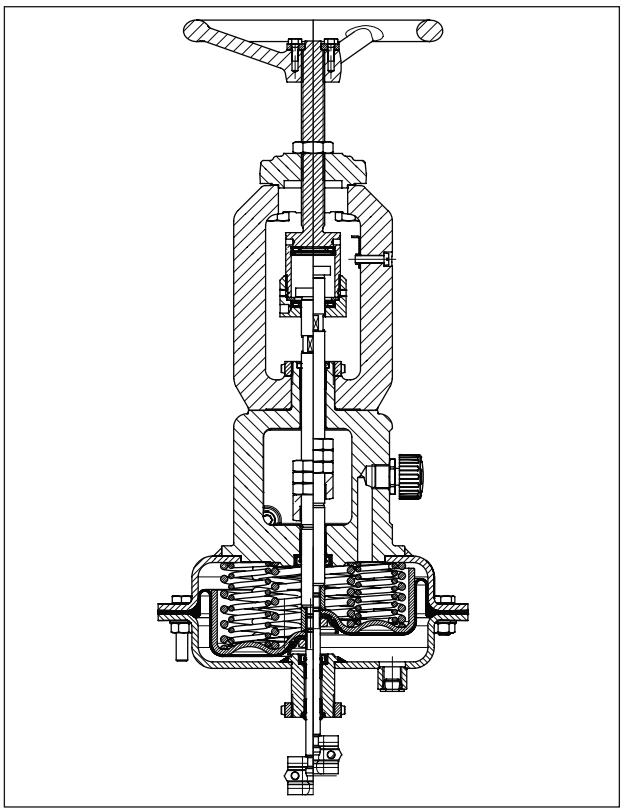

Fig. 13: *Type 3271 (example shows actuator with 750v2 cm²) · Combined version with handwheel and travel stops on both sides*

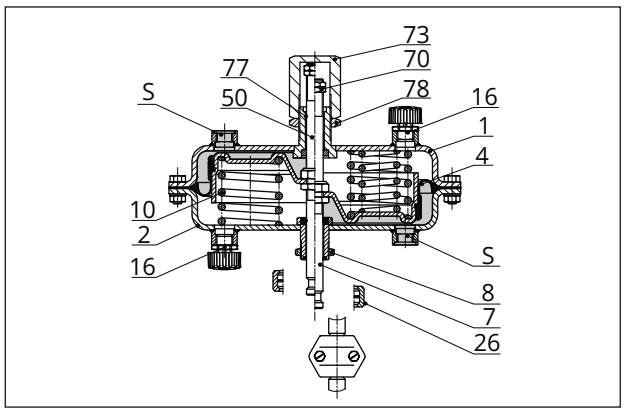

Fig. 14: *Type 3271 with adjustable travel stop*

Legend for Fig. 7 to Fig. 14

1	Top diaphragm case
2	Bottom diaphragm case
4	Diaphragm
7	Actuator stem
8	Ring nut
10	Springs
16	Vent plug
26	Stem connector
50	Actuator stem
60	Handwheel
70	Nut
73	Cover
77	Dry bearing
78	Lock nut
S	Signal pressure connection

Direction of action

Actuators are available with the following directions of action:

- **Actuator stem extends (FA):** The springs cause the actuator stem to move to the lower end position when the diaphragm is relieved of pressure or when the supply air fails.
- **Actuator stem retracts (FE):** The springs cause the actuator stem to retract when the diaphragm is relieved of pressure or when the supply air fails.

Throttling or on/off service

The pneumatic actuators are designed for a maximum supply pressure of 6 bar when used for throttling service.

With “actuator stem extends” direction of action and travel stop, the supply pressure must not exceed the upper bench range value by more than 1.5 bar at the maximum.

For actuators with 750v2 cm² actuator area and “actuator stem retracts” direction of action, the supply pressure must not exceed the upper bench range value by more than 4.2 bar at the maximum.

The following also applies to actuators with 350 cm² actuator area:

- In on/off service, the supply pressure must be limited.
- With “actuator stem retracts” direction of action, the supply pressure must not exceed the upper bench range value by more than 3 bar at the maximum.

Bench range	Fail-safe action	Max. supply pressure
0.2 to 1.0 bar	Actuator stem retracts (FE)	4 bar
0.4 to 2.0 bar		5 bar
0.6 to 3.0 bar		6 bar

Conformity

The actuators bear the EAC mark of conformity.

EAC

Table 1: *Technical data*

Actuator area in cm²		120	175v2	350	350v2	355v2	750v2
Diaphragm		–	Full	Clamped-in	Full	Full	Full
Max. supply pressure		6 bar[1]	6 bar[1]	6 bar[1]	6 bar[1]	6 bar[1]	6 bar[1]
Perm. ambient temperatures with diaphragm material	NBR	-35 to +80 °C[2]	-35 to +90 °C[2][4]	-35 to +90 °C[2][4]	-35 to +90 °C[2][4]	-35 to +90 °C[2][4]	-35 to +90 °C[2][4]
	EPDM	–	–	-50 to +120 °C[3][4]	–	–	–
	PVMQ	–	-60 to +90 °C[4]	–	-60 to +90 °C[4]	-60 to +90 °C[4]	-60 to +90 °C[4]
Degree of protection		IP54[5]	IP54[5]	IP54[5]	IP54[5]	IP54[5]	IP54[5]

1) Observe supply pressure restrictions.

2) In on/off service, lowest temperature restricted to -20 °C

3) In on/off service, lowest temperature restricted to -40 °C

4) Install vent plug (▶ AB 07) for temperatures below -20 °C.

5) The pneumatic actuators do not pose any risk in the sense of the protection requirements described in EN 60529. The IP rating depends on the connecting parts used on the pressurized side and the spring chamber side of the actuator. In this case, components (vent plugs as well as valves accessories, such as solenoid valves, positioners etc.) must be used that comply with the requirements. The maximum rating that can be achieved with the standard vent plug is IP54 (▶ AB 07). Depending on the IP rating of the valve accessories, a maximum rating of IP66 can be achieved for an actuator with air purging of the actuator spring chamber.

Table 2: *Materials*

Actuator area in cm²	120	175v2	350	350v2	355v2	750v2
Actuator stem	Stainless steel	Stainless steel	Stainless steel	Stainless steel	Stainless steel	Stainless steel
Actuator stem sealing	NBR	NBR	NBR	NBR	NBR	NBR
	–	EPDM	EPDM	EPDM	EPDM	EPDM
Housing and associated ambient temperatures	Die-cast aluminum, painted	1.0976/1.0982 Sheet steel, painted Ambient temperature ≥-60 °C	1.0332/1.0335 Sheet steel, painted Ambient temperature ≥-50 °C	1.0976/1.0982 Sheet steel, painted Ambient temperature ≥-60 °C	1.0976/1.0982 Sheet steel, painted Ambient temperature ≥-60 °C	1.0976/1.0982 Sheet steel, painted Ambient temperature ≥-60 °C
	–	1.4301 Sheet stainless steel Ambient temperature ≥-60 °C	1.4301 Sheet stainless steel Ambient temperature ≥-60 °C	1.4301 Sheet stainless steel Ambient temperature ≥-60 °C	–	1.4301 Sheet stainless steel Ambient temperature ≥-60 °C

Table 3: *Technical data for additional handwheel*

Actuator with actuator area in cm²		120	175v2	350	350v2	355v2	750v2 (only for upper bench range value ≤3.1 bar)
Materials	Housing	See Table 2	See Table 2	See Table 2	See Table 2	See Table 2	See Table 2
	Spindle	1.4305	Stainless steel 1.4104	Stainless steel 1.4104	Stainless steel 1.4104	Stainless steel 1.4104	Stainless steel 1.4104
	Handwheel	Aluminum, powder coating	Cast iron EN-GJL-250 (EN-JL1040), powder coating	Cast iron EN-GJL-250 (EN-JL1040), powder coating	Cast iron EN-GJL-250 (EN-JL1040), powder coating	Cast iron EN-GJL-250 (EN-JL1040), powder coating	Cast iron EN-GJL-250 (EN-JL1040), powder coating

Table 4: *Bench range with "actuator stem extends" direction of action*

Actuator area in cm²	Travel volume at rated travel in dm³	Dead volume in dm³	Rated travel in mm	Max. travel in mm[1][2]	Number of springs	Bench range in bar (signal pressure range at rated travel)	Spring force at 0 mm travel in kN[1][3]	Spring force at rated travel in kN[3]	Additional spring compression for rated travel in %	Operating range for preloaded springs in %	Operating range with spring compression in bar	Spring force at 0 mm operating travel in kN	Spring force at operating travel in kN
120 Version for Type 3510 Micro-flow Valve	0.09	0.12	7.5	9	6	0.8...1.6	0.96	1.92	0	–	–	–	–
					6	1.7...2.1[4]	2.04	2.52			–	–	–
					12	2.4...3.0[4]	2.88	3.6			–	–	–
120	0.2	0.10	15	15	3	0.2...1.0	0.24	1.2	0	–	–	–	–
					6	0.4...2.0	0.48	2.4			–	–	–
					6	1.4...2.3[4]	1.68	2.76			–	–	–
					12	2.1...3.3[4]	2.52	3.96			–	–	–
175v2	0.26	0.24	15	19	3	0.2...1.0	0.35	1.75	25	25 %...125 % (= 100 %)	0.4...1.2	0.7	2.1
					6	0.4...2.0	0.7	3.5			0.8...2.4	1.4	4.2
					9	0.5...2.5	0.88	4.38			1.0...3.0	1.75	5.25
					12	0.6...3.0	1.05	5.25			1.2...3.6	2.1	6.3
					8	1.0...2.0	1.75	3.5			1.2...2.2	2.1	3.85
					12	1.3...2.9	2.28	5.08			1.7...3.3	2.98	5.78
350	0.53	0.6	15	22	3	0.2...1.0	0.7	3.5	25	25 %...125 % (= 100 %)	0.4...1.2	1.4	4.2
					6	0.4...2.0	1.4	7			0.8...2.4	2.8	8.4
					12	0.6...3.0	2.1	10.5			1.2...3.6	4.2	12.6
				15	6	1.4...2.3[4]	4.9	8.05	0	–	–	–	–
					12	2.1...3.3[4]	7.35	11.6			–	–	–
350v2	0.54	0.45	15	19	3	0.2...1.0	0.7	3.5	25	25 %...125 % (= 100 %)	0.4...1.2	1.4	4.2
					6	0.4...2.0	1.4	7			0.8...2.4	2.8	8.4
					12	0.6...3.0	2.1	10.5			1.2...3.6	4.2	12.6
				15	6	1.4...2.3[4]	4.9	8.05	0	–	–	–	–
					12	2.1...3.3[4]	7.35	11.6			–	–	–
355v2	1.06	0.8	30	38	3	0.2...1.0	0.7	3.55	25	25 %...125 % (= 100 %)	0.4...1.2	1.42	4.26
					6	0.4...2.0	1.4	7.1			0.8...2.4	2.84	8.52
					12	0.6...3.0	2.1	10.6			1.2...3.6	4.26	12.78
					4	0.9...1.7	3.2	6.0			1.1...1.9	3.91	6.75
					8	1.4...2.6	5.0	9.2			1.75...2.95	6.21	10.47
					10	1.9...3.3	6.5	11.7			2.25...3.65	7.99	12.96
750v2	2.17	1.28	30	38	3	0.2...1.0	1.5	7.5	25	25 %...125 % (= 100 %)	0.4...1.2	3	9
					6	0.4...2.0	3.0	15			0.8...2.4	6	18
					14	0.6...3.0	4.5	22.5			1.2...3.6[5]	9	27
					9	1.4...2.4	10.5	18			1.65...2.65	12.34	19.88
					12	1.9...3.1	14.3	23.3			2.2...3.4[5]	16.5	25.5
					16	2.1...3.8[5][6]	15.8	28.5			2.5...4.2[5][6]	18.75	31.5
					19	2.3...4.2[5][6]	17.3	31.5			2.8...4.7[5][6]	21	35.25

1) Based on lower bench range value. The zero travel is not taken into account.

2) Zero travel as listed in 'Dimensions' table depending on fail-safe action

3) The forces specified relate to the bench range.

4) Preloaded springs

5) Version not available with top-mounted handwheel

6) Not available with "actuator stem retracts" direction of action

Table 5: *Bench range with "actuator stem retracts" direction of action*

Actuator area in cm²	Rated travel in mm	Max. travel in mm[1)2)]	Bench range in bar (signal pressure range at rated travel)	Thrust in kN[3)] at rated travel and supply pressure in bar of					Operating range in % at max. travel	Bench range in bar (signal pressure range at max. travel (125 %))	Thrust in kN[3)] at max. travel (125 %) and supply pressure in bar of				
				2.0	3.0	4.0	5.0	6.0			2.0	3.0	4.0	5.0	6.0
120 Version for Type 3510 Micro-flow Valve	7.5	9	0.8...1.6	0.48	1.68	2.88	4.08	5.28	–	–	–	–	–	–	–
			1.7...2.1[4)]	–	1.08	2.28	3.48	4.68			–	–	–	–	–
			2.4...3.0[4)]	–	–	1.2	2.4	3.6			–	–	–	–	–
120	15	15	0.2...1.0	1.2	2.4	3.6	4.8	6	–	–	–	–	–	–	–
			0.4...2.0	–	1.2	2.4	3.6	4.8			–	–	–	–	–
			1.4...2.3[4)]	–	0.84	2.04	3.24	4.44			–	–	–	–	–
			2.1...3.3[4)]	–	–	0.84	2.04	3.24			–	–	–	–	–
175v2	15	19	0.2...1.0	1.75	3.5	5.25	7	8.75	0 %...125 % (= 125 %)	0.2...1.2	1.4	3.15	4.9	6.65	8.4
			0.4...2.0	–	1.75	3.5	5.25	7		0.4...2.4	–	1.05	2.8	4.55	6.3
			0.5...2.5	–	0.88	2.63	4.38	6.13		0.5...3.0	–	–	1.75	3.5	5.25
			0.6...3.0	–	–	1.75	3.5	5.25		0.6...3.6	–	–	0.70	2.45	4.20
			1.0...2.0	–	1.75	3.5	5.25	7		1.0...2.2	–	1.4	3.15	4.9	6.65
			1.3...2.9	–	0.18	1.93	3.68	5.43		1.3...3.3	–	–	1.23	2.98	4.73
350	15	22[5)]	0.2...1.0	3.5	7	10.5	14	17.5	0 %...125 % (= 125 %)	0.2...1.2	2.8	6.3	9.8	13.3	16.8
			0.4...2.0	–	3.7	7	10.5	14		0.4...2.4	–	2.1	5.6	9.1	12.6
			0.6...3.0	–	–	3.5	7	10.5		0.6...3.6	–	–	1.4	4.9	8.4
		15	1.4...2.3[4)]	–	2.45	5.95	9.45	13	–	–	–	–	–	–	–
			2.1...3.3[4)]	–	–	2.45	5.95	9.45			–	–	–	–	–
350v2	15	19	0.2...1.0	3.5	7	10.5	14	17.5	0 %...125 % (= 125 %)	0.2...1.2	2.8	6.3	9.8	13.3	16.8
			0.4...2.0	–	3.5	7	10.5	14		0.4...2.4	–	2.1	5.6	9.1	12.6
			0.6...3.0	–	–	3.5	7	10.5		0.6...3.6	–	–	1.4	4.9	8.4
		15	1.4...2.3[4)]	–	2.45	5.95	9.45	13	–	–	–	–	–	–	–
			2.1...3.3[4)]	–	–	2.45	5.95	9.45			–	–	–	–	–
355v2	30	38	0.2...1.0	3.55	7.1	10.6	14.2	17.7	0 %...125 % (= 125 %)	0.2...1.2	2.84	6.39	9.94	13.49	17.04
			0.4...2.0	–	3.55	7.1	10.6	14.2		0.4...2.4	–	2.13	5.68	9.23	12.78
			0.6...3.0	–	–	3.55	7.1	10.6		0.6...3.6	–	–	1.42	4.97	8.52
			0.9...1.7	1.1	4.6	8.2	11.7	15.3		0.9...1.9	–	3.91	7.46	11.01	14.56
			1.4...2.6	–	1.4	5	8.5	12.1		1.4...2.95	–	–	3.73	7.28	10.83
			1.9...3.3	–	–	2.5	6	9.6		1.9...3.65	–	–	1.24	4.79	8.34
750v2	30	38	0.2...1.0	7.5	15	22.5	30	37.5	0 %...125 % (= 125 %)	0.2...1.2	6	13.5	21	28.5	36
			0.4...2.0	–	7.5	15	22.5	30		0.4...2.4	–	4.5	12	19.5	27
			0.6...3.0	–	–	7.5	15	22.5		0.6...3.6	–	–	3	10.5	18
			1.4...2.4	–	4.5	12	19.5	27		1.4...2.65	–	2.63	10.13	17.63	25.13
			1.9...3.1	–	–	6.8	14.3	21.8		1.9...3.4	–	–	4.5	12	19.5

1) Based on lower bench range value. The zero travel is not taken into account.

2) Zero travel as listed in 'Dimensions' table depending on fail-safe action

3) The forces specified relate to the bench range.

4) Preloaded springs

5) On request

Table 6: *Dimensions[1] in mm · Type 3271*

Actuator area in cm²			120	175v2	350	350v2	355v2	750v2
Height	H[2]		–	–	–	–	–	171
	H'		69	78	82	92	131	139
	Ha		–	15	15	15	15	15
	H1	Only with handwheel	205	313	320	330	486	493
		With handwheel and travel stop	–	413	420	430	586	593
	$H2_{max}$	Only with handwheel	–	358	365	375	536	543
		With handwheel and travel stop	–	458	465	475	636	643
	$H4_{rated}$FA		75	75	75	75	90	90
	$H4_{max}$FA		78	78	78	78	93	93
	$H4_{max}$FE		78	78	85	85	96	98
	H6		34	34	34	34	34	34
	H7[3]		–	–	–	–	–	65
Travel stop	H8[4]$_{max}$		75	75	85	85	115	129
Diameter	ØD		168	215	280	280	280	394
	ØD1		80	180	250	250	250	315
	ØD2		10	10	16	16	16	16
Ød (thread)			M30x1.5[5]	M30x1.5[5]	M30x1.5	M30x1.5	M30x1.5	M30x1.5
Connection (a optionally)	a		G ⅛	G ¼	G ⅜	G ⅜	G ⅜	G ⅜
			⅛ NPT	¼ NPT	⅜ NPT	⅜ NPT	⅜ NPT	⅜ NPT

1) The specified dimensions are theoretical maximum design values for a specific standard device configuration. They do not reflect every possible case of use. The actual values for individual devices may differ depending on the device configuration and the specific application.

2) H' and H are identical for versions on which the lifting eyelet is welded directly onto the housing. The value H' applies in this case.

3) Height of eyebolt according to DIN 580. Height of the swivel hoist may differ.

4) Travel stop on both sides

5) 120 and 175v2 cm² actuator areas with connection for Type 3510 Micro-flow Valve with M20x1.5 thread

Table 7: *Dimensions[1] in mm · Type 3277*

Actuator area in cm²			120	175v2	350	350v2	355v2	750v2
Height	H[2]		–	–	–	–	–	171
	H'		70	78	82	82	121	139
	Ha		–	15	15	15	15	15
	H1	Only with handwheel	293	413	420	419	576	595
		With handwheel and travel stop	–	513	520	519	676	695
	$H2_{max}$	Only with handwheel	–	458	465	464	626	643
		With handwheel and travel stop	–	558	565	564	726	743
	$H4_{rated}$FA		75	75	75	75	90	90
	$H4_{max}$FA		78	78	78	78	93	93
	$H4_{max}$FE		88	101	101	101	101	101
	H5		88	101	101	101	101	101
	H6		34	34	34	34	34	34
	H7[3]		–	–	–	–	–	65
Travel stop	H8[4]$_{max}$		75	75	85	85	115	129
Yoke width	L		70	70	70	70	70	70

Actuator area in cm²		120	175v2	350	350v2	355v2	750v2
Diameter	ØD	168	215	280	280	280	394
	ØD1	80	180	250	250	250	315
	ØD2	10	10	16	16	16	16
Ød (thread)		M30x1.5[6]	M30x1.5[6]	M30x1.5	M30x1.5	M30x1.5	M30x1.5
Connection (a optionally)	a	G ⅛	G ¼	G ⅜	G ⅜	G ⅜	G ⅜
		⅛ NPT	¼ NPT	⅜ NPT	⅜ NPT	⅜ NPT	⅜ NPT
	a2	–	G ⅜[5]	G ⅜[5]	G ⅜[5]	G ⅜[5]	G ⅜[5]

1) The specified dimensions are theoretical maximum design values for a specific standard device configuration. They do not reflect every possible case of use. The actual values for individual devices may differ depending on the device configuration and the specific application.

2) H' and H are identical for versions on which the lifting eyelet is welded directly onto the housing. The value H' applies in this case.

3) Height of eyebolt according to DIN 580. Height of the swivel hoist may differ.

4) Travel stop on both sides

5) An adapter G ⅜ to ⅜ NPT is available for the a2 connection. It can be ordered separately using the following article number: 100160362

6) 120 and 175v2 cm² actuator areas with connection for Type 3510 Micro-flow Valve with M20x1.5 thread

Dimensional drawings for Type 3271

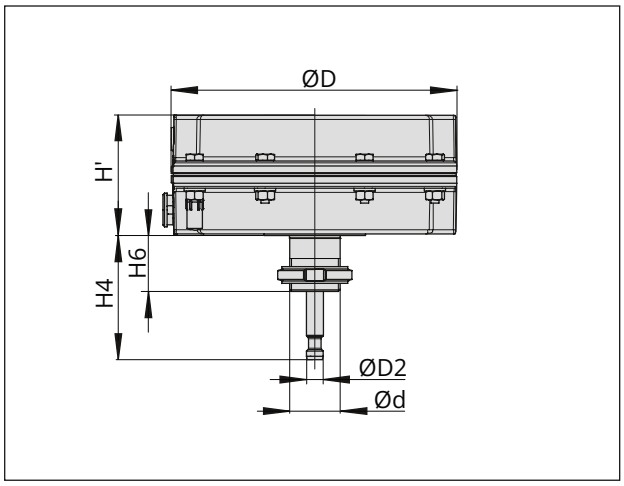

Fig. 15: *Type 3271-5 · 120 cm² actuator area*

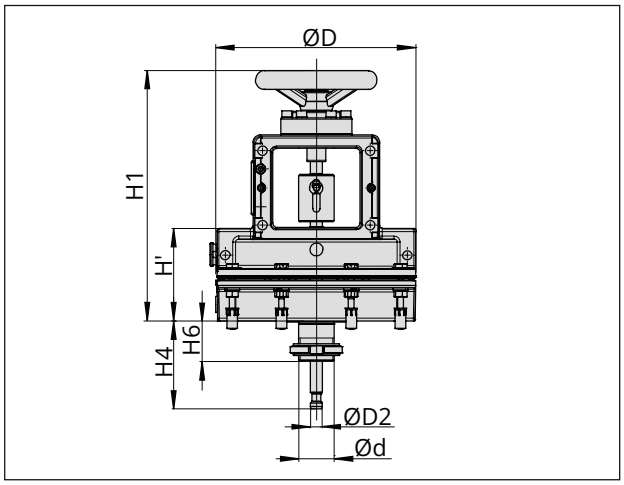

Fig. 16: *Type 3271-5 with additional handwheel*

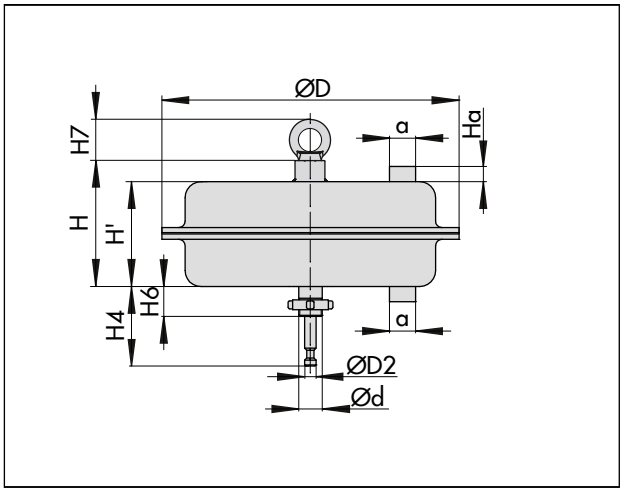

Fig. 17: *Type 3271 with 750v2 cm² actuator area*

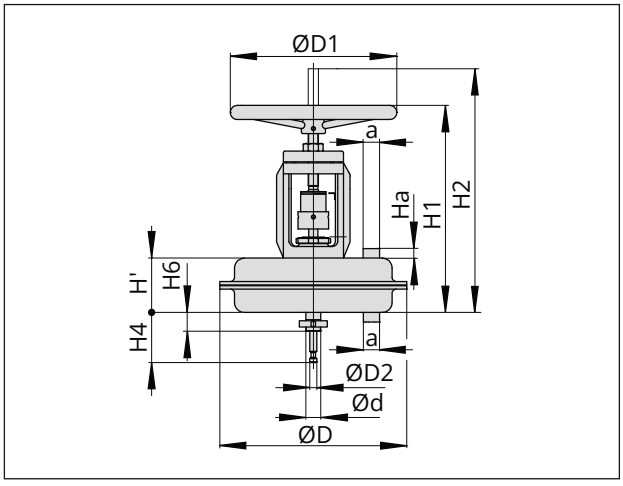

Fig. 18: *Type 3271 with additional handwheel*

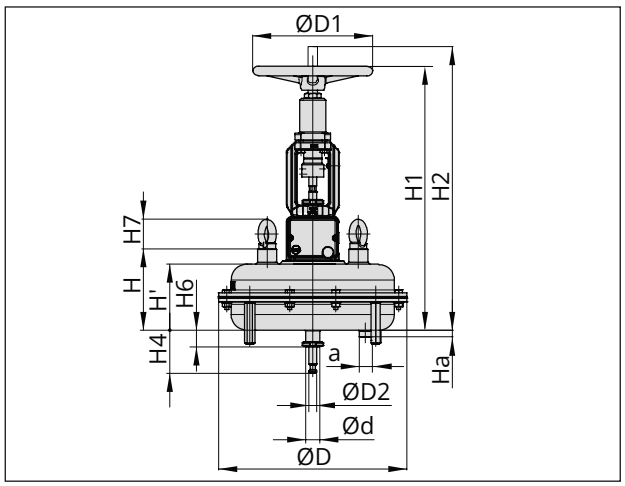

Fig. 19: *Type 3271 Pneumatic Actuator with handwheel and travel stops on both sides*

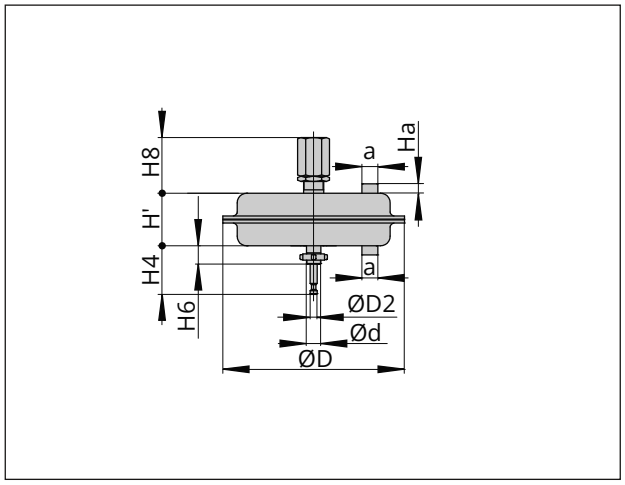

Fig. 20: *Type 3271 with travel stop*

Dimensional drawings for Type 3277

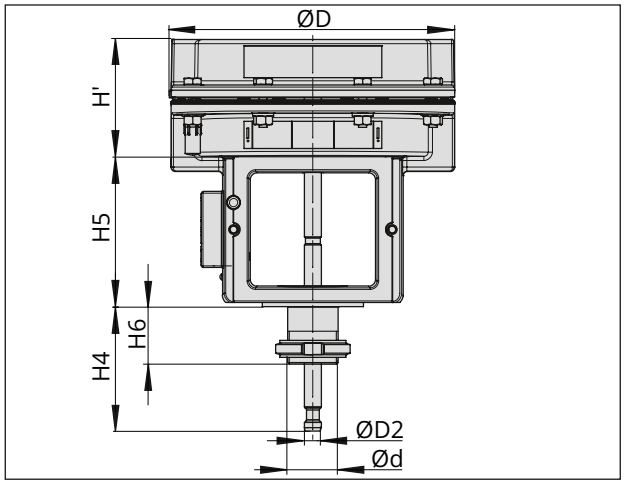

Fig. 21: *Type 3277-5 · 120 cm² actuator area*

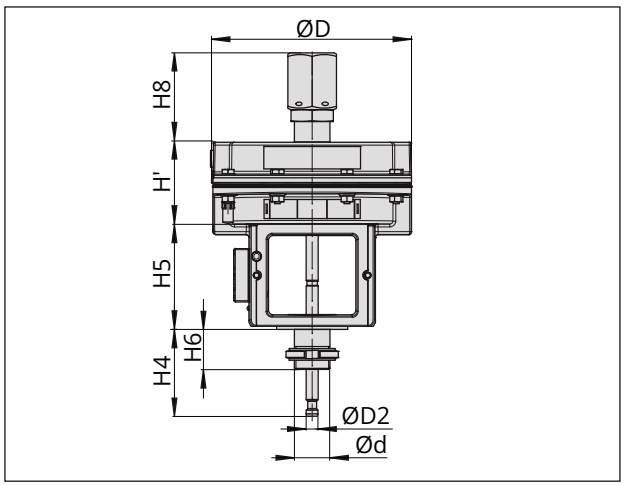

Fig. 22: *Type 3277-5 with travel stop*

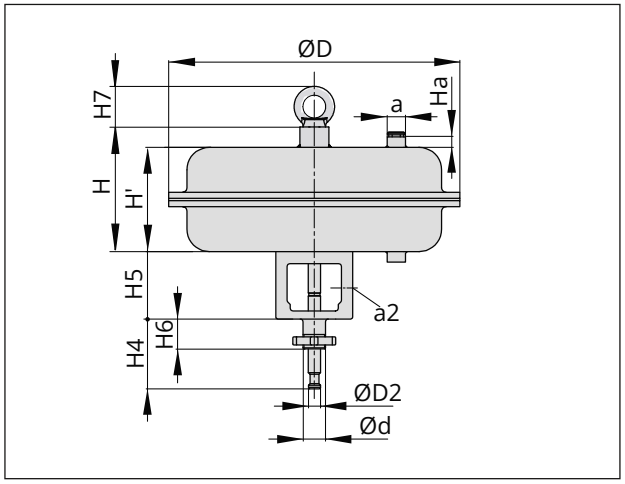

Fig. 23: *Type 3277 with yoke for direct attachment of accessories · 750v2 cm² actuator area*

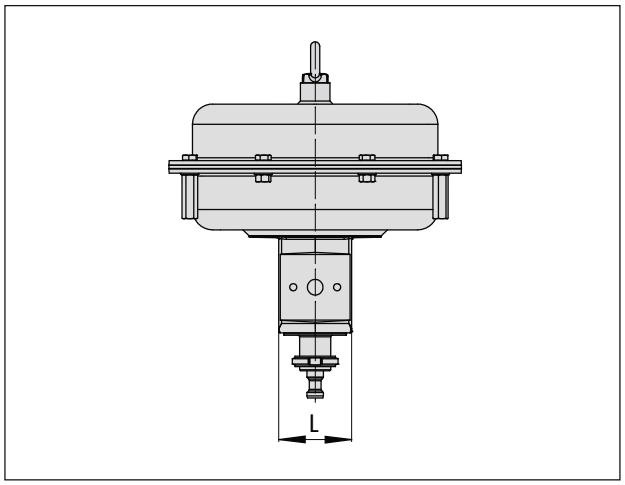

Fig. 24: *Type 3277 with yoke (side view) · 750v2 cm² actuator area*

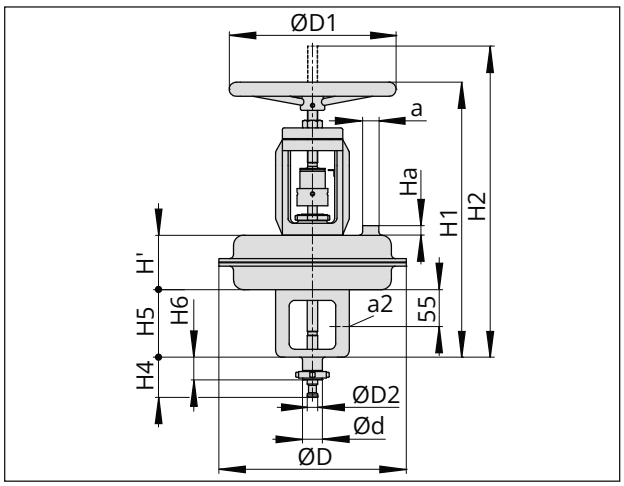

Fig. 25: *Type 3277 with additional handwheel*

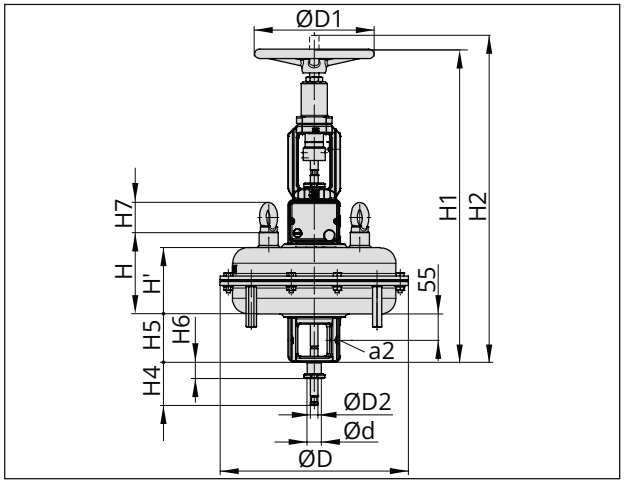

Fig. 26: *Type 3277 Pneumatic Actuator with handwheel and travel stops on both sides*

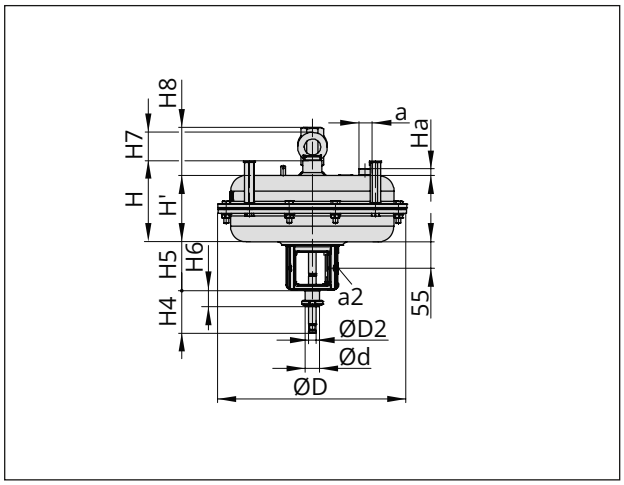

Fig. 27: *Type 3277 with travel stop*

Dimensional drawings for mounting on a micro-flow valve

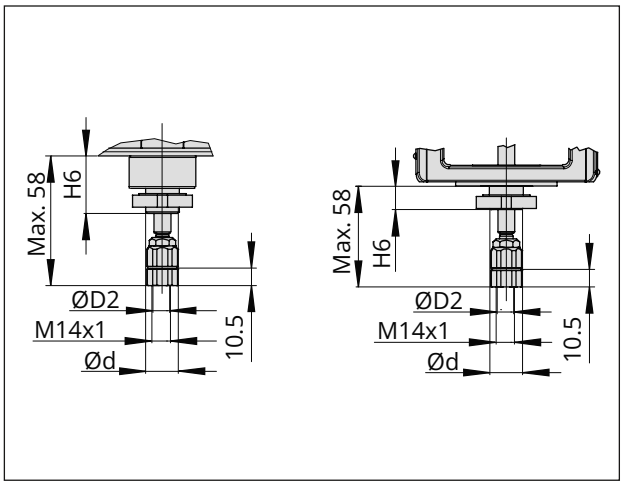

Fig. 28: *Type 3271-5 and Type 3277-5 with 7.5 mm travel for Type 3510 Micro-flow Valve*

Table 8: *Weights[1)] for Type 3271 and Type 3277 Pneumatic Actuators*

Type ... Actuator	Actuator area in cm²		120	175v2	350	350v2	355v2	750v2
3271	Without handwheel	kg	2.5	6	8	11.5	15	36
3271	With handwheel	kg	4	10	13	16.5	20	41

Type ... Actuator	Actuator area in cm²		120	175v2	350	350v2	355v2	750v2
3277	Without handwheel	kg	3.2	10	12	15	19	40
3277	With handwheel	kg	4.5	14	17	20	24	45

1) The weights specified apply to a specific standard device configuration. Weights of other actuator configurations may differ depending on the version (material, number of actuator springs etc.).

Accessories

Swivel hoist

Large pneumatic actuators (with >355v2 cm² actuator area) have a female thread on the top diaphragm case to allow an eyebolt or swivel hoist to be screwed into it. The eyebolt can be used to vertically lift the actuator and is included in the scope of delivery. The swivel hoist is designed for setting a control valve assembly upright or for lifting the actuator without valve. The swivel hoist can be ordered (accessories).

Actuator area in cm²	Material number	
	Eyebolt (DIN 580)	Swivel hoist
750v2	8325-0131	8442-1017

Feedback connection (travel pick-off interface) according to DIN EN 60534-6-1

Various valve accessories according to DIN EN 60534-6-1 and NAMUR recommendation can be mounted on SAMSON control valves designed according to the modular principle (see associated valve documentation). The travel pick-off interface for these mounted devices can be ordered (accessories):

Type ... Actuator	Actuator area in cm²	Item/material number (accessories) for	
		Attachment on one side	Attachment on both sides
3271	120 175v2	1400-6816 (included in scope of delivery of the actuator)	100029690
3277	120	1400-6816	100029690
3271	350 350v2 355v2 750v2	100029695 (included in scope of delivery of the actuator)	1400-5529
3277	175v2 350 350v2 355v2 750v2	100029695	1400-5529

List of documentation for Type 3271 and Type 3277 Pneumatic Actuators

Device type	Actuator area in cm²	Data sheet		Mounting and operating instructions
		General product line	SAM001[1] product line	
Types 3271 and 3277 Pneumatic Actuators	120	▶ T 8310-1/4/5/6	▶ T 8310-11/14/15/16	▶ EB 8310-1
	350			▶ EB 8310-6
	175v2 · 350v2 · 750v2			▶ EB 8310-5
	355v2			▶ EB 8310-4
Type 3271 Pneumatic Actuator	1000 · 1250v2	▶ T 8310-2/7	▶ T 8310-12	▶ EB 8310-2
	1400-120 · 2800 · 2x 2800		–	▶ EB 8310-7
	1400-60	▶ T 8310-3	▶ T 8310-13	▶ EB 8310-3
	1400-250	▶ T 8310-8	–	▶ EB 8310-8

[1] The customer standard SAM001 indicates SAMSON devices that comply with the NAMUR Recommendation NE 53. After subscribing to ▶ NE53 newsletter, users of these devices automatically receive information on any hardware or software changes. Separate data sheets have been created for Type 3271 and Type 3277 Pneumatic Actuators that comply with the SAM001 standard.

Information Sheet for control valves

▶ T 8000-1

Ordering text

Type ... Actuator	3271 3277 for direct attachment of accessories
Actuator area	... cm²
Travel	... mm
Optional	Manual override Travel stop Combined version with handwheel and travel stops on both sides
Bench range	... bar
Direction of action	Actuator stem extends (FA) Actuator stem retracts (FE)
Signal pressure connection	G .../... NPT
Housing material	See Table 2
Rolling diaphragm	NBR EPDM PVMQ