BHDT

A Member of Dr. Aichhorn Group

NEED MORE EXCELLENCE **IN HIGH PRESSURE?**

FOR YOUR SUCCESS. **WITH HIGH PRESSURE.**

As the leading qualified provider of high-pressure equipment, components, and services, BHDT is your reliable partner for applications in the chemical and petrochemical industry.

We at BHDT design and manufacture products in cooperation with well-known licensors of chemical processes, using state-of-the-art engineering tools, high-precision computer-controlled processing machinery and taking customer demands into account at the highest level of technological standards.

Thanks to decades of experience, suitable materials, and quality-assured order handling, we have achieved an excellent position on the global market.

Our decades-long experience, the use of quality raw material, and our wide range of products – reactors, coolers, high-pressure valves, fittings, isometrics, and accessories – allow us to realize solutions specifically tailored to your needs. Our service does not stop at singular products either. Complete systems that demand a high degree of know-how across several disciplines ranging from project management and detail engineering to process knowledge are part of our daily routine.

This is BHDT – excellence in high pressure.

- BHDT is a global leader for LDPE/EVA and UREA plant equipment
- Service and maintenance business
- 4 workshops, total production area: 26,150m²
- Family-owned company
- In-house engineering and fabrication of high-pressure equipment
- Established in 1958 – more than 60 years of experience
- Component pressure ranges from PN100 to PN4000



COMPLETE **SERVICE**

It is our comprehensive service that elevates BHDT above other companies.
We work closely together with our customers from the enquiry process,
technical alignment and quotation, through to the order execution, material purchasing,
fabrication, and delivery. And with more than 60 years of experience under our belt,
we can guarantee you products and services of the highest quality.

OUR POSITION AND FOCUS

**We see ourselves as the "hidden champion" within our niche market segments.
Continually focusing on our core competencies in development, design,
production and service has made us the market leader.**

1 OFFER

Individually and technically aligned, implementing state of the
art improvements and considering latest code requirements

2 ENGINEERING

In-house engineering from detail design to mechanical
calculation, stress analysis, numerical simulations, etc.

3 MANUFACTURING

Deepest in-house manufacturing, using certified quality raw materials,
as well as the newest and most efficient production processes

4 INSTALLATION

Individual assistance, support and service
during the whole installation process

5 AFTERSALES SERVICE

Inspection, troubleshooting, spare part
management, emergency service

Located in Kapfenberg, Styria (Austria), BHDT stands
for best quality in high pressure applications since 1958.







CERTIFIED **QUALITY**

High quality and environmentally friendly production is what BHDT stands for.

BHDT maintains a quality and environmental management system in accordance with ISO 9001:2015, 14001:2015 and 45001:2018. In addition, the requirements of the pressure equipment directives and the ASME Code are also met.

All our products are tested multiple times with respect to technical properties and function to ensure the best quality. For this purpose, a multitude of different test methods is used. Our quality and sustainability promises are verified by numerous certificates and permits.

- EN ISO 9001:2015, 14001:2015, 45001:2018
- PED 2014/68/EU Module D/D1, E/E1, H/H1
- AD 2000 HP0
- EN ISO 3834-2:2005
- ASME U, U3
- South-Korea KGS Certificate for Pressure Vessel, Safety Valves and Emergency Cut-Off Devices
- EAC Certificates and Declarations for Pressure Vessel and Valves
- Chinese Manufacture License for Various Equipment

GLOBAL **PRESENCE**

Our international presence is guaranteed by our representations and local partners around the world.

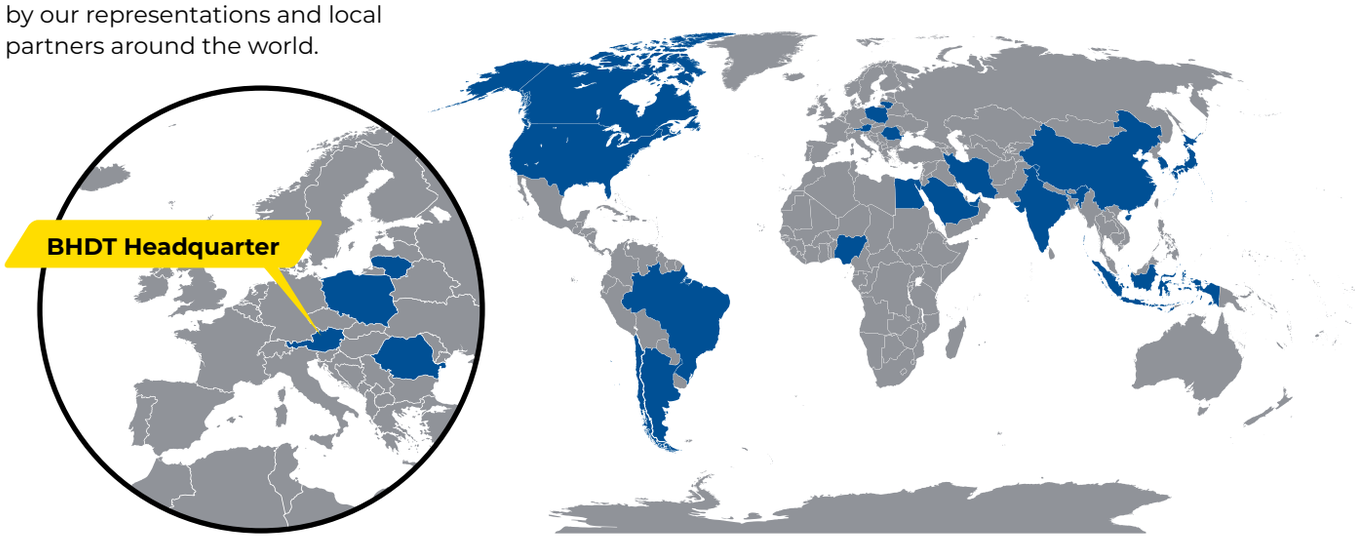

EXCELLENCE
IN HIGH PRESSURE

BHDT
A Member of Dr. Aichhorn Group

BHDT GmbH | Werk-VI-Strasse 52 | 8605 Kapfenberg, Austria
T: +43 3862 303-0 | F: +43 3862 303-4 | office@bhdt.at | www.bhdt.at

OUR **PRODUCTS**



VALVES

PROCESS EQUIPMENT

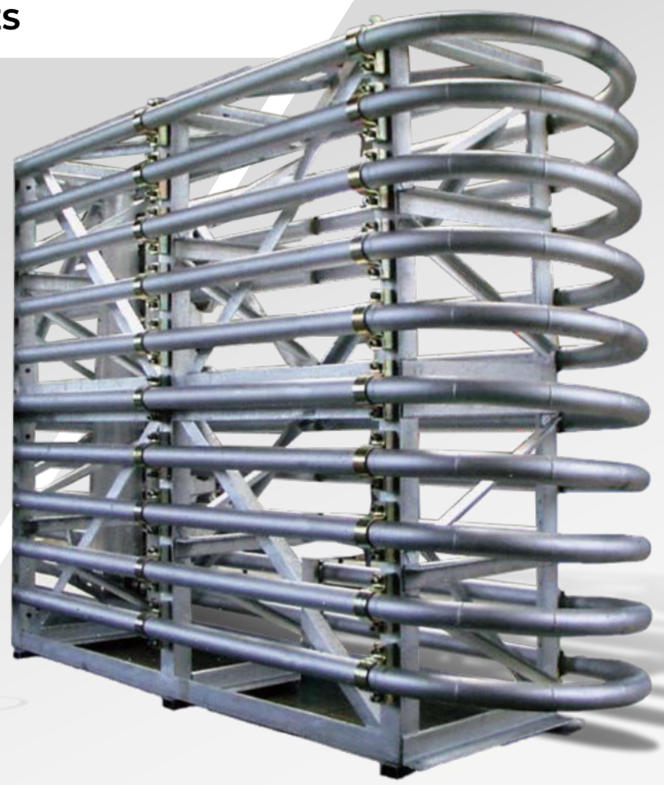



CONNECTORS



ACCESSORIES



PIPING

OUR **CAPABILITIES**

AFFILIATED SERVICES



DESIGN AND ENGINEERING

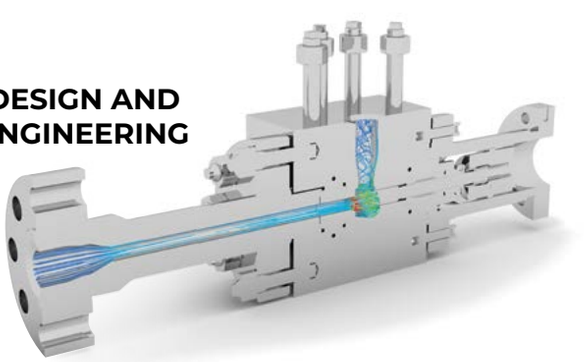

EXCELLENCE
IN HIGH PRESSURE

BHDT
A Member of Dr. Aichhorn Group

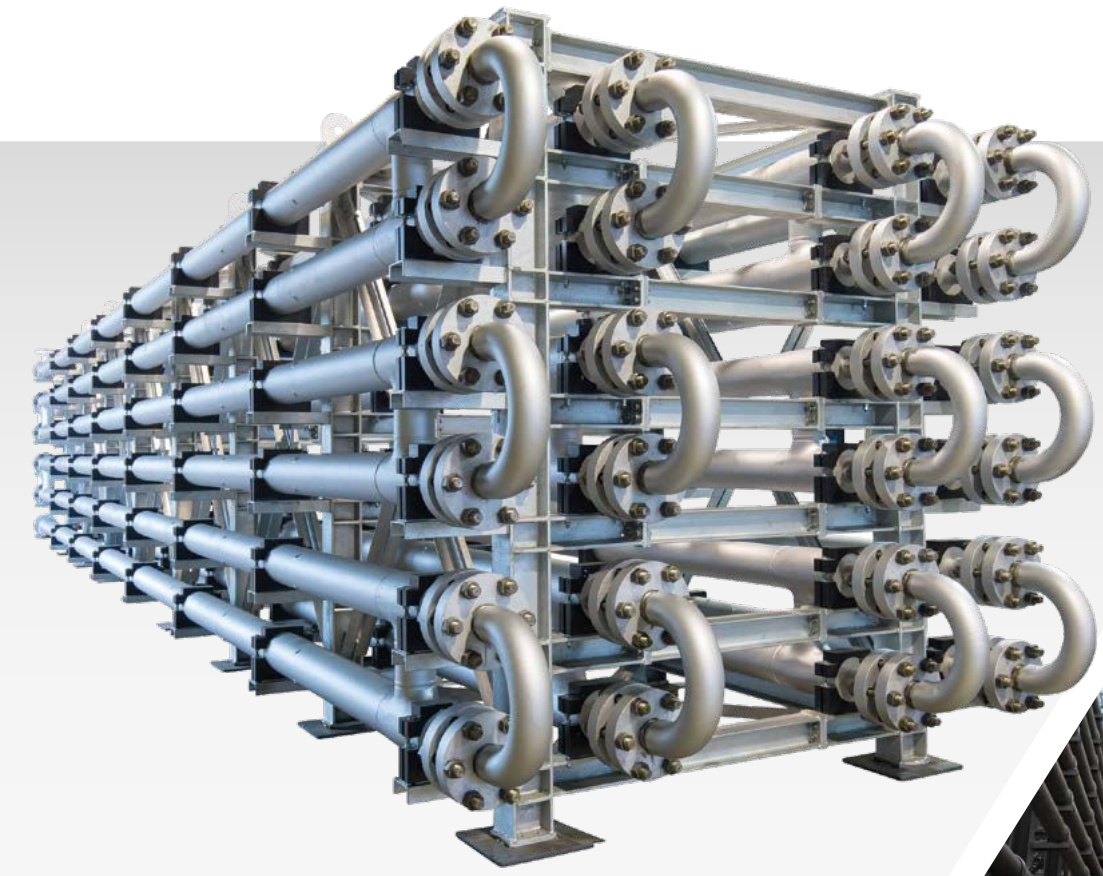



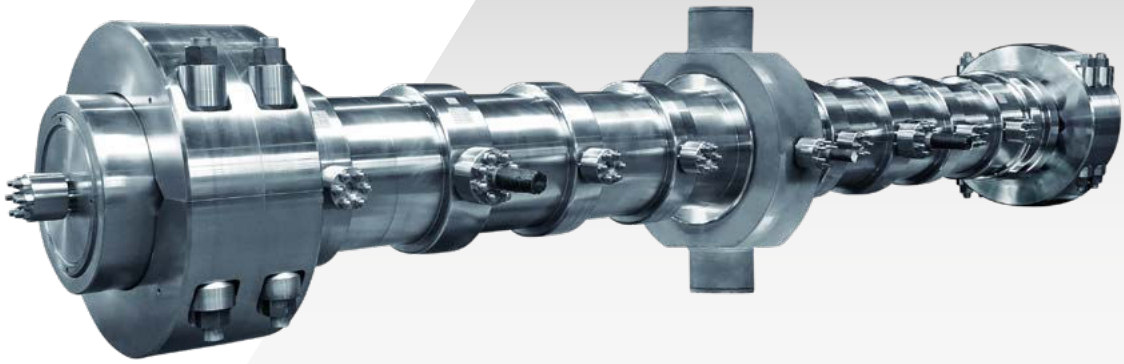

BHDT PROCESS EQUIPMENT
PRODUCT RANGE

TUBULAR REACTOR
TUBULAR HEAT EXCHANGER
AUTOCLAVE REACTOR

BHDT PROCESS EQUIPMENT **FOR HP APPLICATIONS**

BHDT is a highly specialized fabricator for large industrial plants, particularly in the field of Low-Density-Poly-Ethylene (LDPE) and Ethylene-Vinyl-Acetate (EVA), as well as other specialized high-pressure equipment for the petrochemical industry.

TUBULAR **REACTOR**

BHDT's long reference list of customers for tubular reactors proves our strength in that field. BHDT is the only vendor on the market **that manufactures high pressure tubes entirely in-house.**

With our deep hole drilling and honing machines we can deliver high-pressure tubes up to a length of 21 m. Due to our large capacities and the good cooperation with Western European steel mills we can guarantee the highest product quality and on-time delivery.

MAIN FEATURES

LDPE/EVA application
Nominal size: DN20-DN89
Nominal pressure range: PN2500-PN4000

Materials
Various high-pressure materials, according to customer requirements, including different material grades of SA-723, DIN EN 1.6580, AISI 4340

Sealing systems
e.g., lens rings, cone rings

Design codes
e.g., ASME BPVC, AD2000, taking country-specific restrictions into account

TUBULAR **HEAT EXCHANGER**

Medium- and high-pressure tubular heat exchangers are the core equipment that BHDT designs, fabricates and supplies to the industry. The process design for these types of heat exchangers is provided by well-known process licensors.

Depending on the size of a plant, the heat exchanger systems can be pre-fabricated at BHDT and delivered either as singular modules, or as loose items for on-site assembly.

BHDT offers various types of tubular heat exchangers, such as:

Tubular Intercoolers

Tubular Preheaters

Tubular Aftercoolers

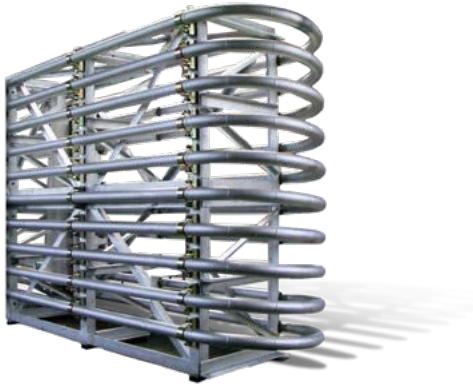

AUTOCLAVE **REACTOR**

Autoclave reactors are supplied individually and with tailor-made design to accommodate customer requirements.

BHDT offers complete autoclave reactor systems – including stirrers, motors, bearing systems and accessories, all according to different licensors specifications.

MAIN FEATURES

LDPE/EVA application
Nominal size: DN400-DN650
Nominal pressure range: PN1500-PN2500

Materials
Various forged high strength materials for chemical plants, according to customer requirements, including SA-723 Grade 3

Sealing systems
wave rings, lens rings

Design codes
e.g., ASME BPVC, AD2000, taking country-specific restrictions into account

Body type
According to customer specification

Inlet/Outlet type
According to customer specification

EXCELLENCE
IN HIGH PRESSURE

BHDT
A Member of Dr. Aichhorn Group

BHDT GmbH | Werk-VI-Strasse 52 | 8605 Kapfenberg, Austria
T: +43 3862 303-0 | F: +43 3862 303-4 | office@bhdt.at | www.bhdt.at

EXCELLENCE
IN HIGH PRESSURE

BHDT
A Member of Dr. Aichhorn Group







BHDT PIPING
PRODUCT RANGE

HIGH PRESSURE AND EXTRA HIGH PRESSURE PIPING
MEDIUM PRESSURE PIPING
PREFABRICATED ISOMETRICS

BHDT PIPING
FOR HP APPLICATIONS

BHDT offers piping suited for all applications – from medium-pressure, high-pressure and extra-high-pressure piping, to prefabricated isometrics. All piping is designed to fully meet the client's requirements and undergoes a dedicated testing procedure, guaranteeing the highest level of quality.

HIGH PRESSURE AND EXTRA HIGH PRESSURE **PIPING**

High-pressure and extra-high-pressure piping are used for applications requiring an operating pressure above 50 MPa. The HP flange connections are typically threaded.

MAIN FEATURES

LDPE/EVA application
Nominal size: DN10-DN150
Nominal Pressure range: PN1600-PN4000

Materials
Various high-pressure materials, depending on customer requirements, including different material grades of SA-723, DIN EN 1.6580, AISI 4340

Sealing systems
e. g. lens rings, cone rings

Design codes
ASME B31.3, AD2000, taking country-specific restrictions into account

MEDIUM PRESSURE **PIPING**

Medium-pressure piping is used for applications requiring an operating pressure of up to 50 MPa and weldable construction materials.

MAIN FEATURES

LDPE/EVA application
Nominal size: DN10-DN240
Nominal Pressure range: PN325-PN500

UREA/Ammonia/Melamine application
Nominal size: ½"-16"
Nominal pressure range: PN325 / up to class 2500#

Oil & Gas application
Nominal size: ½"-16"
Nominal pressure range: up to class 4500# / API15000

Materials
Various high-pressure materials, depending on customer requirements

Sealing systems
e. g., lens rings, cone rings, BestLoc® lip seals, ASME B16.5

Design codes
e. g., ASME B31.3, ASME Sec. VIII, AD2000, DIN EN 13445, taking country-specific restrictions into account

PREFABRICATED **ISOMETRICS**

The prefabrication of isometric spools is carried out in BHDT's workshop whenever possible. This allows for increased product quality and faster on-site installation.

MAIN FEATURES

LDPE/EVA application
Nominal size: DN10-DN240
Nominal Pressure range: PN325-PN4000

UREA/Ammonia/Melamine application
Nominal size: ½"-16"
Nominal pressure range: PN325 / up to class 2500#

Oil & Gas application
Nominal size: ½"-16"
Nominal pressure range: up to class 4500# / API 15000

Materials
Various high-pressure materials, depending on customer requirements

Sealing systems
e. g., lens rings, cone rings, BestLoc® lip seals, ASME B16.5

Design codes
e. g., ASME B31.3, AD2000, DIN EN 13445, taking country-specific restrictions into account

EXCELLENCE
IN HIGH PRESSURE

BHDT
A Member of Dr. Aichhorn Group

BHDT GmbH | Werk-VI-Strasse 52 | 8605 Kapfenberg, Austria
T: +43 3862 303-0 | F: +43 3862 303-4 | office@bhdt.at | www.bhdt.at

EXCELLENCE
IN HIGH PRESSURE

BHDT
A Member of Dr. Aichhorn Group

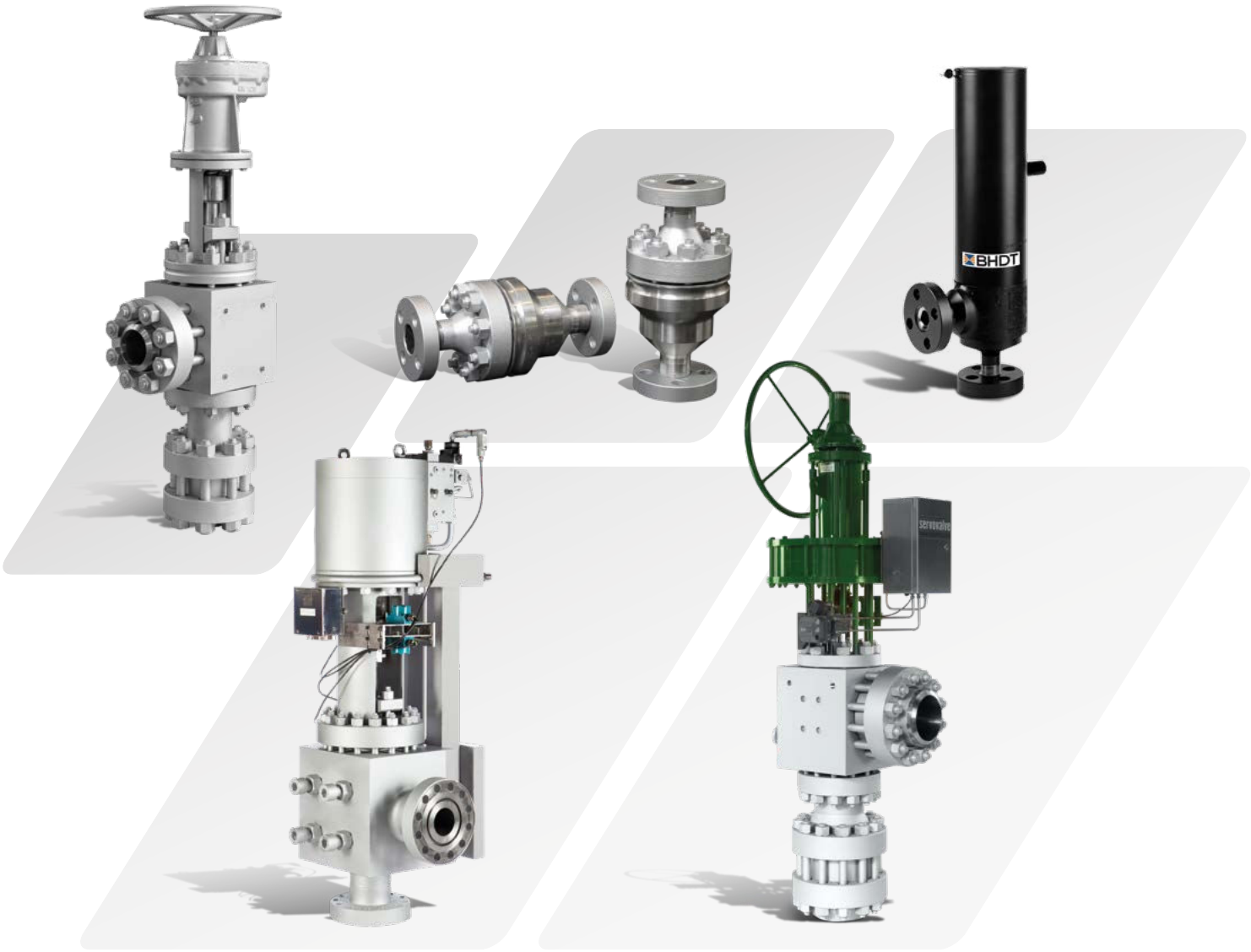

BHDT VALVES
PRODUCT RANGE

MANUAL, CHECK AND SAFETY VALVES
ACTUATED, CONTROL AND SPECIAL VALVES

BHDT VALVES
FOR HP APPLICATIONS

LDPE/EVA
UREA/AMMONIA/MELAMINE
OIL & GAS

BHDT offers a wide range of tailor-made valves. All valves are designed to fully meet the client's requirements. Different face-to-face dimensions, connecting details, flow directions and internals (exchangeable vs. firm seat), as well as heating and cooling jackets can be produced. BHDT valves can be equipped with various types of actuators from different manufacturers (pneumatic, hydraulic, electric, etc.), and accessories such as positioners, solenoid valves, position transducers and limit switches.

All valves undergo a dedicated testing procedure, guaranteeing the highest level of quality of the finished product. Additional client- or project-specific inspections or requirements can be added through an individual inspection and test plan.

MAIN **FEATURES**

- All valves designed and manufactured to client's specs
- Valves are exclusively made out of forged material
- All connections can be produced according to all international and customer requirements as per ANSI B16.5, DIN Standard, BestLoc®, as well as per specification of market leading licensors
- Exchangeable seats, steam jackets, locking devices and many other customer-specific features are available
- Various materials for chemical plants according to customer requirements are available
- Double block and bleed design available
- Full metal sealing available
- Complete package delivery including extensively tested manufacturer's accessories
- Complete in-house testing according to international standards and customer requirements
- Completion of valve supply by delivering technically attuned hydraulic oil units, peroxide pumps and valve test stations
- Various types of actuators from different manufacturers available

SPECIAL FEATURES FOR CONTROL VALVES

- Controller: Hydraulic-Servovalve; Pneumatic-Positioner
- Feedback: Hydraulic-LVDT
- Control signals: different signals possible

Nominal size:
DN 3mm – DN 89mm
1/8" up to 16"

Nominal temperature range:
-196 °C to +650 °C

Nominal pressure range:
- ASME Cl. 150# – Cl. 4500#
- API 2,000 psi – 20,000 psi
- PN325 – PN4000

Raw material:
exclusively made out of forged material

Body type / inlet-outlet connection:
according to customer specifications

Internal sealing system:
lens ring sealing, MSI-ring, silver-ring

EXCELLENCE
IN HIGH PRESSURE

BHDT
A Member of Dr. Aichhorn Group

BHDT GmbH | Werk-VI-Strasse 52 | 8605 Kapfenberg, Austria
T: +43 3862 303-0 | F: +43 3862 303-4 | office@bhdt.at | www.bhdt.at

EXCELLENCE
IN HIGH PRESSURE

BHDT
A Member of Dr. Aichhorn Group

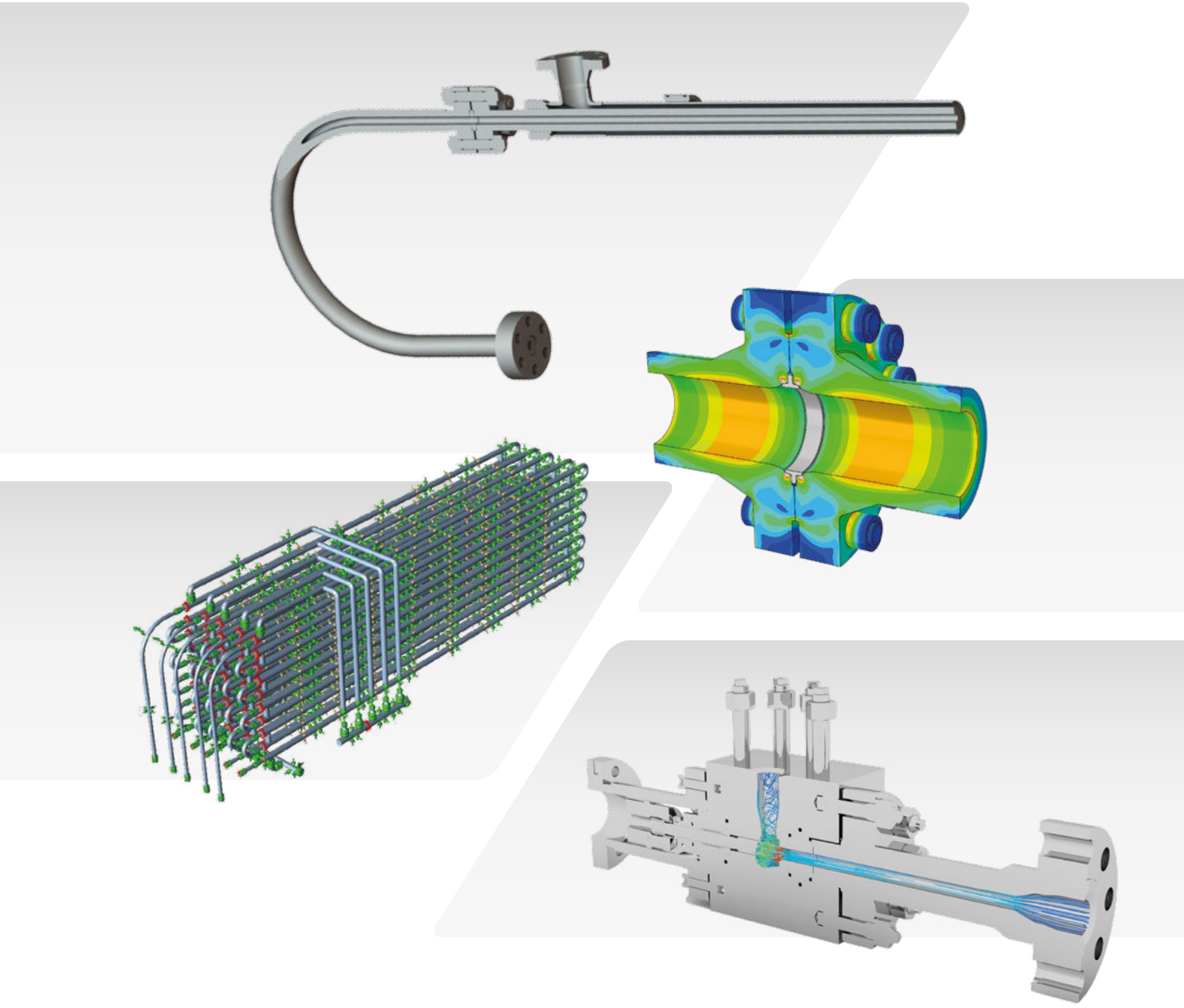

ENGINEERING AND DESIGN **CAPABILITIES**

EXPERIENCED – SPECIALIZED – CUSTOM-MADE

ENGINEERING AND DESIGN **CAPABILITIES**

Specialized engineering capabilities is one of the core competencies of BHDT. Our customers' specification packages, which include process engineering parameters as well as basic design specifications, establish the basis for our engineering work.

By providing tailor-made solutions, BHDT supports its customers in optimizing their component, equipment, and plant design. Compliance with the latest design codes and local regulations is mandatory for installation and commissioning of the supplied equipment. With the help of our state-of-the-art software tools, BHDT can ensure that all requirements are fulfilled.

3D DESIGN

- Tailor-made components and assembly design per customer specifications
- 3D Layout design
- Clash studies

FEA

- Static stress analysis
- Coupled temperature displacement analysis
- Natural frequency analysis
- Heat transfer analysis

VALVE SIZING CALCULATIONS

- Valve trim sizing
- Trim contour optimization
- Multistage trim dimensioning
- Silencer dimensioning
- Flow capacity calculations

FLEXIBILITY AND STRESS ANALYSIS

- Determination of reaction forces in piping systems
- Overload prevention
- Pipe routing optimization
- Clash studies due to thermal expansion

CODE CALCULATIONS

Design by rules and design by analysis considering rules from all common pressure vessel and piping codes

STEEL STRUCTURE ENGINEERING

- Steel structure design considering thermal loads, dead weights and pulsating forces
- Foundation load determination
- Piping supports optimization
- Clash studies

DESIGN CODES

Design codes according to the latest release in combination with local legal provisions

AD 2000

DIN EN
DIN-EN 13445, EN 13480, DIN EN 60534, DIN EN 1591, EN ISO 4126

API
API 579-1/ASME FFS-1

ASME
ASME VIII Div. 1,
ASME VIII Div. 3,
ASME B31. 3

AVAILABLE SOFTWARE

Abaqus
Finite element simulation, design by analysis calculations

Conval
Analytical fluid calculation

Mathcad
Design by rules calculations

Caesar II
Pipe stress and flexibility studies

Solid Works
CAD

EXCELLENCE
IN HIGH PRESSURE

BHDT
A Member of Dr. Aichhorn Group

BHDT GmbH | Werk-VI-Strasse 52 | 8605 Kapfenberg, Austria
T: +43 3862 303-0 | F: +43 3862 303-4 | office@bhdt.at | www.bhdt.at

EXCELLENCE
IN HIGH PRESSURE

BHDT
A Member of Dr. Aichhorn Group









BHDT PRODUCTION AND NDE **SPECIALIZED FABRICATION CAPABILITIES**

DEEP HOLE DRILLING, HONING,
BENDING, WELDING, MACHINING, NDE

BHDT PRODUCTION AND NDE **FOR HP APPLICATIONS**

BHDT's extensive expertise in component manufacturing for the high pressure industry is a direct result of decades of experience. Special attention is paid to the core fabrication processes as well as the extent of in-house production. BHDT is the only high pressure equipment supplier in the world to have all required production capabilities available in-house.

DEEPHOLE DRILLING

- High precision drilling operation
- Maximum length of up to 21 meters
- Solid drilling from 20 mm to 200 mm inside diameter
- Counter drilling or trepanning up to 300 mm inside diameter

WELDING

Weld processing of all types of pressure vessel steels according to both national (AD series' materials) and international standards (ASME, ASTM, API, AISI)

Semiautomatic welding equipment for hard-facing (wear-resistant) and overlay welding (corrosion-resistant)

Fully automatic welding equipment for welding of heating jackets and pins on tubes up to 20 meters in length

HONING

- High efficiency and high precision honing operation
- Special process for small diameters and long tubes
- Maximum length 21 meters
- Diameter range 20 mm to 200 mm
- Roughness Ra < 0,1 µm

NDE

Our products undergo multiple tests to ensure highest quality, proper function and correct technical properties.

- Ultrasonic testing (UT)
- Eddy current testing (ET)
- Magnetic particle testing (MT)
- Dye penetrant testing (PT)
- Positive Material Identification (PMI)
- Check of ferrite content
- Video endoscopy
- Hardness testing
- Surface roughness testing
- Thickness measurement of coating and painting
- Dimensional and visual testing
- Pressure and tightness testing
- Functional testing
- Fatigue testing machine
- Mechanical testing and radiographic testing (RT) are executed in cooperation with external partners.

BENDING

Depending on customer requirements, BHDT produces various types of pipe bends. These can be long-radius or short-radius bends and can also be equipped with a heating jacket.

Different bending processes are applied in the production depending on the required bend radius.

Long-radius bends are produced by cold bending on special bending machines. After the bending process, the bends are stress relieved through heat treatment.

Particularly tight bending radii (short-radius bends) are hot bent by inductive bending or forged in a die, followed by an appropriate heat treatment to achieve the required material properties according to specification.

MACHINING

A machine park with more than 20 modern CNC turning and milling machines for the production of all our valve parts as well as all the components for high pressure tubes and isometrics guarantee maximum flexibility to fulfill our clients wishes.

BHDT
A Member of Dr. Aichhorn Group

EXCELLENCE
IN HIGH PRESSURE

BHDT GmbH | Werk-VI-Strasse 52 | 8605 Kapfenberg, Austria
T: +43 3862 303-0 | F: +43 3862 303-4 | office@bhdt.at | www.bhdt.at