Technical Information
Prosonic M
FMU40, FMU41, FMU42, FMU43, FMU44

Ultrasonic Level Measurement



Compact transmitters for non-contact level measurement

Application

- Continuous, non-contact level measurement in fluids, pastes, sullages and coarse bulk materials
- Flow measurement in open channels and measuring weirs
- System integration via:
  - HART (standard), 4 to 20 mA
  - PROFIBUS PA
  - FOUNDATION Fieldbus
- Maximum measuring range:
  - FMU40: 5 m (16 ft) in fluids, 2 m (6.6 ft) in bulk materials
  - FMU41: 8 m (26 ft) in fluids, 3,5 m (11 ft) in bulk materials
  - FMU42: 10 m (33 ft) in fluids, 5 m (16 ft) in bulk materials
  - FMU43: 15 m (49 ft) in fluids, 7 m (23 ft) in bulk materials
  - FMU44: 20 m (66 ft) in fluids, 10 m (33 ft) in bulk materials

Features and benefits

- Quick and simple commissioning via menu-guided on-site operation with four-line, multilingual plain text display
- Envelope curves on the on-site display for simple diagnosis
- Easy remote operation, diagnosis and measuring point documentation with the free operating program FieldCare supplied.
- Suitable for explosion hazardous areas (Gas-Ex, Dust-Ex)
- Linearization function (up to 32 points) for conversion of the measured value into any unit of length, volume or flow rate
- Non-contact measurement method minimizes service requirements
- Optional remote display and operation (up to 20 m (66 ft) from transmitter)
- Installation possible from thread G 1½“ or 1½“ NPT upwards
- Integrated temperature sensor for automatic correction of the temperature dependent sound velocity

Endress+Hauser
People for Process Automation

Table of contents

Function and system design 3
Measuring principle 3
Equipment architecture 4

Input 9
Measured variable 9
Measuring range 9
Operating frequency 10

Output 11
Output signal 11
Signal on alarm 11
Load HART 11
Output damping 11
Linearization 11

Power supply 12
Terminal compartment 12
Terminal assignment 12
Fieldbus plug connectors 13
Supply voltage 13
Terminals 14
Cable entry 14
Power consumption 14
Current consumption (2 wire instruments) 14
HART ripple 14
Max. noise HART 14
Galvanic isolation 15

Performance characteristics 15
Reaction time 15
Reference operating conditions 15
Measured value resolution 15
Pulse frequency 15
Maximum measuring error 15
Typical measuring error[2)] 15
Influence of the vapor pressure 16

Installation 16
Installation variants FMU40, FMU41 16
Installation variants FMU42, FMU44 17
Installation variants FMU43 17
Installation conditions for level measurements 17
Installation in narrow shafts 18
Installation conditions for flow measurements 18
Blocking distance, nozzle installation 20

Environment 21
Ambient temperature 21
Storage temperature 21
Resistance to alternating temperature cycles 21
Climate class 21
Ingress protection 21
Vibration resistance 21
Electromagnetic compatibility (EMC) 21

Process 21
Process temperature 21
Process pressure 21

Mechanical construction 22
Design; dimensions 22
Weight 24
Housing design 25
Process connection 25
Material (not in contact with process) 26
Material (in contact with process) 27

Operability 28
Display and operating elements 28
On-site operation 29
Remote operation 29

Certificates and Approvals 31
CE mark 31
Ex approval 31
External standards and guidelines 31

Ordering information 32
Product structure FMU40 32
Product structure FMU41 34
Product structure FMU42 36
Product structure FMU43 38
Product structure FMU44 39
3-point linearity protocol 41
5-point linearity protocol 42
Scope of delivery 42

Accessories 43
Weather protection cover 43
Installation bracket for FMU40, FMU41 43
Screw in flange 44
Cantilever with mounting frame or wall bracket 45
Commubox FXA195 HART 47
Commubox FXA291 47
ToF Adapter FXA291 47
Remote display FHX40 47

Documentation 51
Operating manual 51
Description of device functions 51
Short instructions 51
Safety Instructions ATEX 52
Safety Instructions NEPSI 53
Safety Instructions INMETRO 54
Control drawings Installation drawings 55

Function and system design

Measuring principle

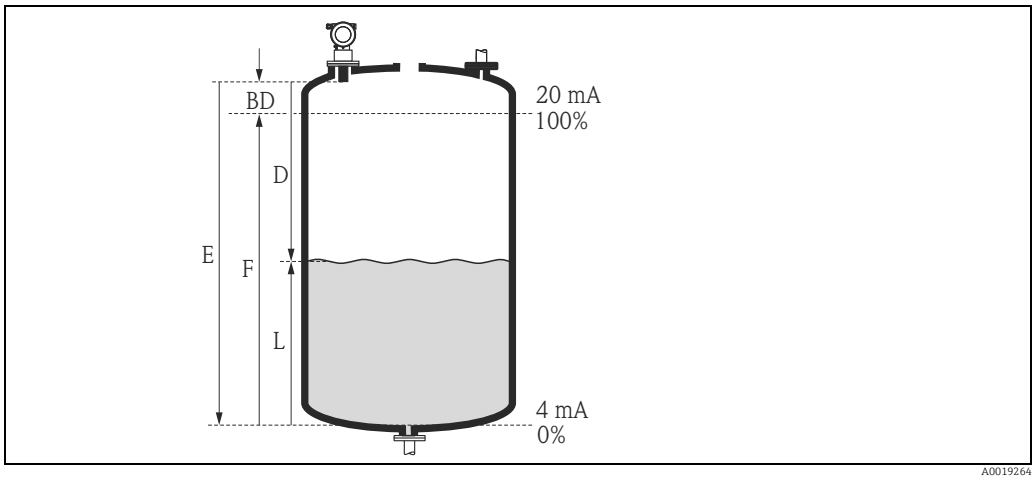

BD *Blocking distance*
D *Distance from sensor membrane - product surface*
E *Empty distance*
F *Span (full distance)*
L *Level*

Sensor	BD	Max. range fluids	Max. range bulk materials
FMU40	0.25 (0.8)	5 (16)	2 (6.6)
FMU41	0.35 (1.1)	8 (26)	3.5 (11)
FMU42	0.4 (1.3)	10 (33)	5 (16)
FMU43	0.6 (2.0)	15 (49)	7 (23)
FMU44	0.5 (1.6)	20 (66)	10 (33)

Dimensions m (ft)

Time-of-flight method

The sensor of the Prosonic M transmits ultrasonic pulses in the direction of the product surface. There, they are reflected back and received by the sensor. The Prosonic M measures the time t between pulse transmission and reception. The instrument uses the time t (and the velocity of sound c) to calculate the distance D between the sensor membrane and the product surface:

$D = c \cdot t/2$

As the device knows the empty distance E from a user entry, it can calculate the level as follows:

$L = E - D$

An integrated temperature sensor (NTC) compensates for changes in the velocity of sound caused by temperature changes.

Interference echo suppression

The interference echo suppression feature on the Prosonic M ensures that interference echos (e.g. from edges, welded joints and installations) are not interpreted as a level echo.

Calibration

Enter the empty distance E and the span F to calibrate the device.

Blocking distance

Span F may not extend into the blocking distance BD. Level echos within the blocking distance cannot be evaluated due to the transient characteristics of the sensor.

Equipment architecture

4...20 mA output with HART protocol

The complete measuring system consists of:

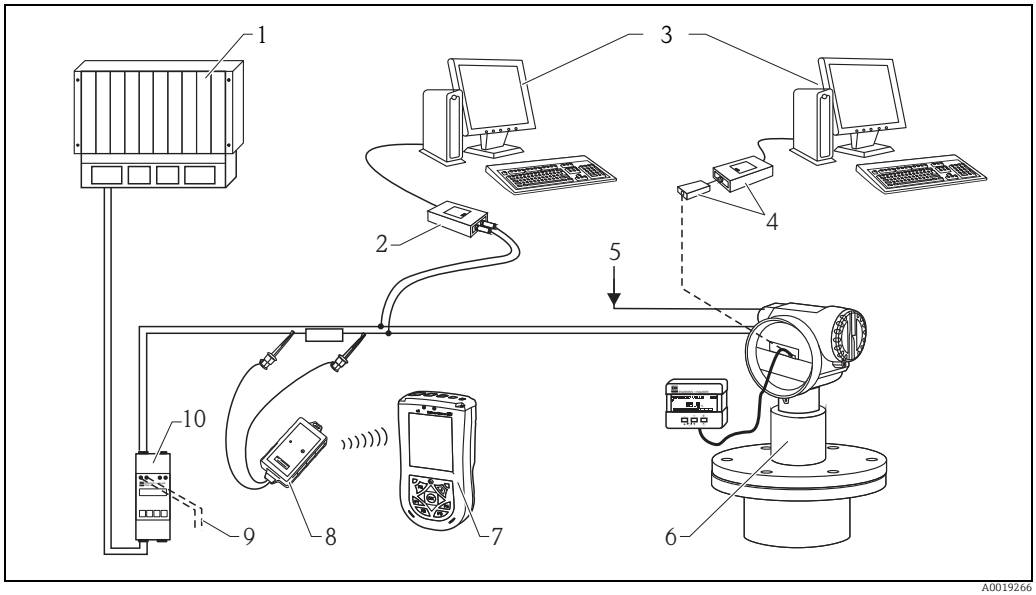

1 PLC (programmable logic controller)
2 Commubox FXA191 (RS232) or FXA195 (USB)
3 Computer with operating tool (e.g. FieldCare)
4 Commubox FXA291 with ToF Adapter FXA291
5 Power supply (for 4-wire)
6 Prosonic with display and operating modul
7 Field Xpert
8 VIATOR Bluetooth modem with connection cable
9 Connection for Commubox FXA191, FXA195 or Field Xpert
10 Transmitter supply unit RMA422 or RN221N (communication resistor included)

If the HART communication resistor is not built into the supply unit, it is necessary to insert a communication resistor of 250 Ω into the 2-wire line.

On-site operation

- With display and operating module,
- With a Personal Computer, FXA291 with ToF Adapter FXA291 (USB) and the operating software "FieldCare". FieldCare is a graphical operating software for instruments (radar, ultrasonic, guided microimpulse). It assists with commissioning, securing data, signal analysis and documentation of the measuring point.

Remote operation

- With Field Xpert
- With a Personal Computer, Commubox FXA195 and the operating software "FieldCare"

System integration using PROFIBUS PA

A maximum of 32 transmitters (8 if mounted in an explosion hazardous location Ex ia IIC according to FISCO-model) can be connected to the bus.The segment coupler provides the operating voltage to the bus. Both on-site as well as remote operation are possible. For further information on the cable specifications, see Operating Instructions BA00034S/04/ENGuidelines for planning and commissioning PROFIBUS DP/PA", PNO Guideline 2.092 "PROFIBUS PA User and Installation Guideline" and IEC61158-2 (MBP).

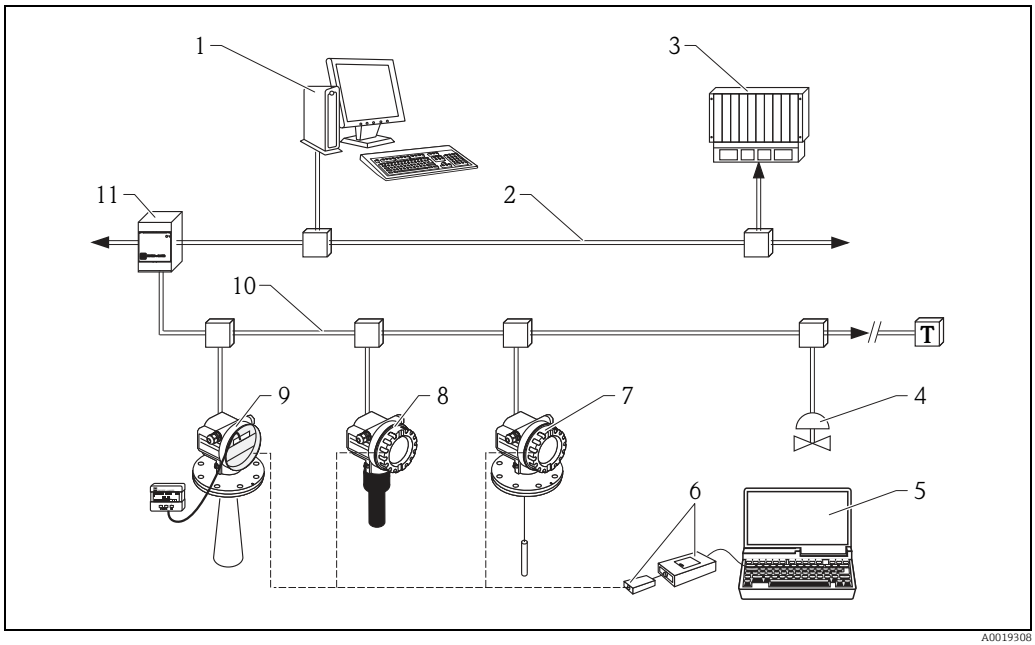

1 Computer with Profiboard/Proficard and operating tool (FieldCare)
2 PROFIBUS DP
3 PLC (programmable logic controller)
4 More functions (valves etc.)
5 Computer with operating tool (FieldCare)
6 Commubox FXA291 with ToF Adapter FXA291
7 Levelflex M
8 Prosonic M
9 Micropilot M with display and operating modul
10 PROFIBUS PA
11 Segment coupler

System integration using FOUNDATION Fieldbus

A maximum of 32 transmitters (standard or Ex d) can be connected to the bus. For protection class Ex ia: the maximum number of transmitters depends on the established rules and standards for intrinsically safe circuits (EN 60070-14) and proof of instrinsic safety. Both on-site and remote operation are possible.

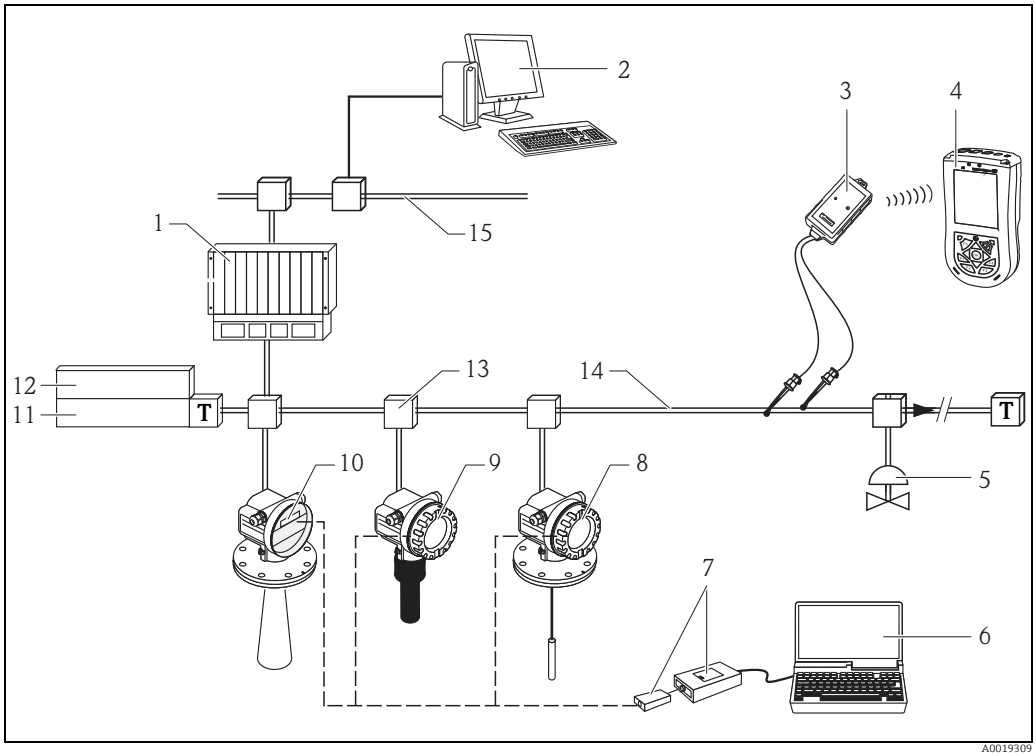

1 SPS, PLC, API
2 Personal computer, e.g. with NI-FBUS configurator
3 VIATOR Bluetooth modem with connection cable
4 Field Xpert
5 More functions (valves etc.)
6 FieldCare
7 Commubox FXA291 with ToF Adapter FXA291
8 Levelflex M
9 Prosonic M
10 Micropilot M
11 Power conditioner
12 Power supply
13 FF link
14 FOUNDATION Fieldbus
15 Ethernet

System integration using Endress+Hauser Rackbus

You can interconnect a maximum of 64 2-wire devices with HART protocol to a Rackbus. Use an FXN672 interface module for each device. You can integrate this bus into a higher-level bus by using gateway.

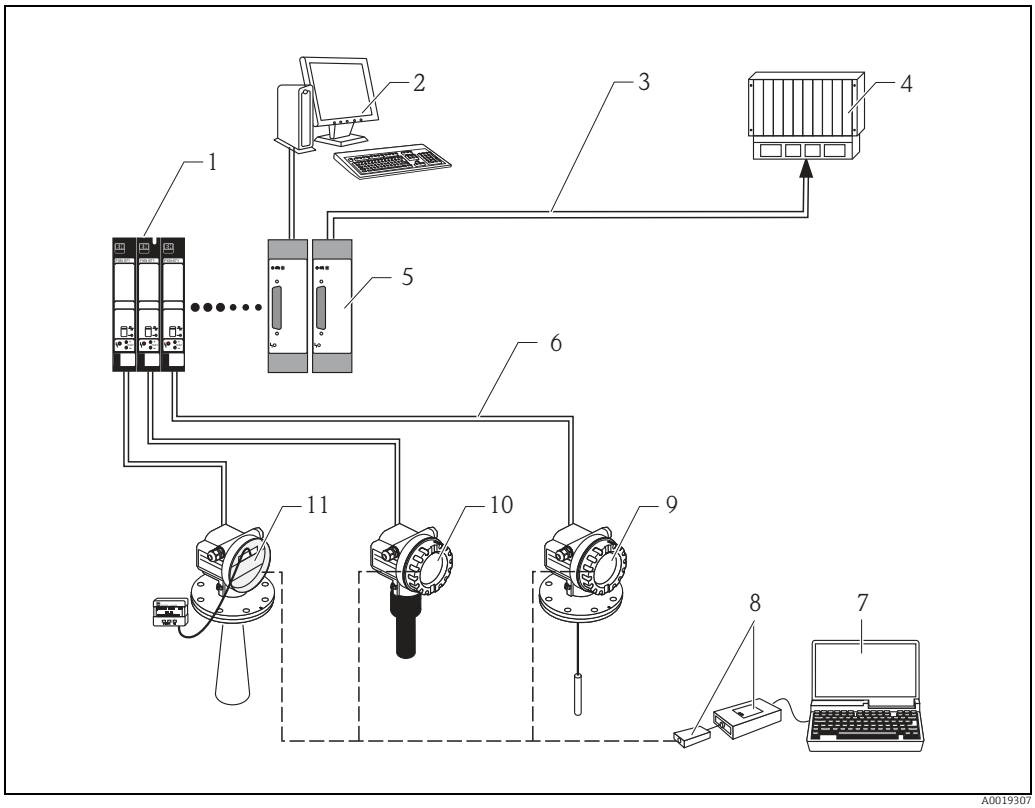

1 Interface FXN672
2 Personal computer with communication software
3 Bus
4 PLC
5 Gateway to MODBUS, FIP, PROFIBUS, INTERBUS etc.
6 4-20 mA HART
7 FieldCare
8 Commubox FXA291 with ToF Adapter FXA291
9 Levelflex M
10 Prosonic M
11 Micropilot M with display and operating modul

Note!
The FXN672 can be used with all 2-wire devices of the Prosonic M family.

System integration via Fieldgate

Vendor Managed Inventory

By using Fieldgates to interrogate tank or silo levels remotely, suppliers of raw materials can provide their regular customers with information about the current supplies at any time and, for example, account for them in their own production planning. For their part, the Fieldgates monitor the configured level limits and, if required, automatically activate the next supply. The spectrum of options here ranges from a simple purchasing requisition via e-mail through to fully automatic order administration by coupling XML data into the planning systems on both sides.

Remote maintenance of measuring equipment

Fieldgates not only transfer the current measured values, they also alert the responsible standby personnel, if required, via e-mail or SMS. In the event of an alarm or also when performing routine checks, service technicians can diagnose and configure connected HART devices remotely. All that is required for this is the corresponding HART operating software (e.g. FieldCare) for the connected device. Fieldgate passes on the information transparently, so that all options for the respective operating software are available remotely. Some on-site service operations can be avoided by using remote diagnosis and remote configuration and all others can at least be better planned and prepared.

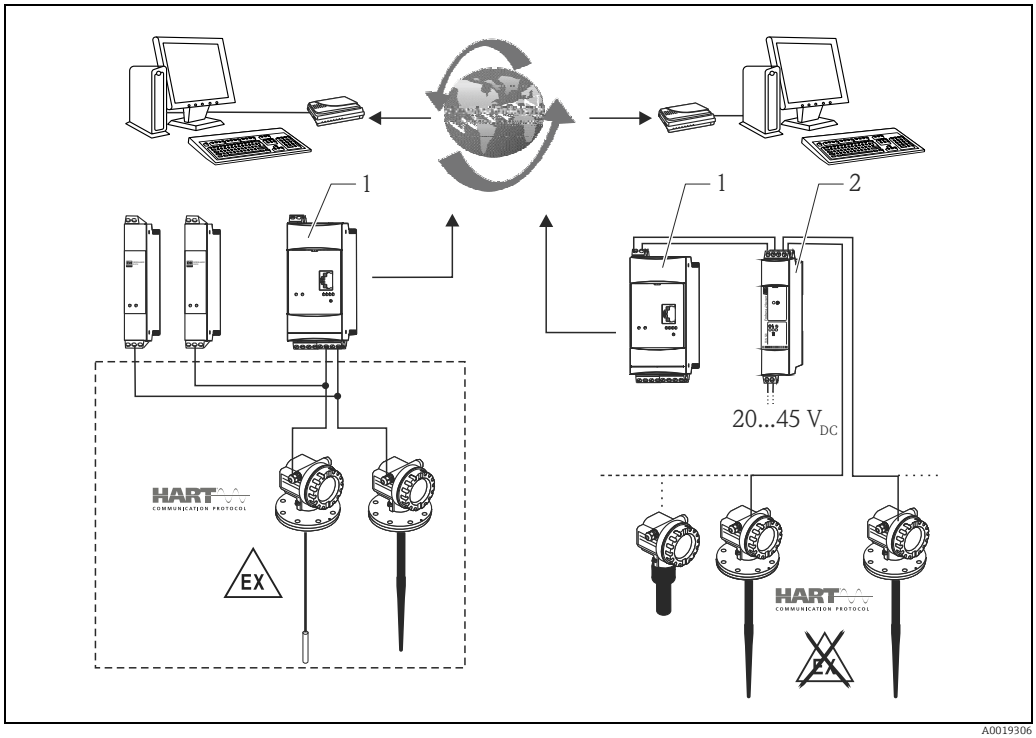

The complete measuring system consists of devices and:

1 Fieldgate FXA520
2 Multidrop Connector FXN520

Note!
The number of instruments which can be connected in mutidrop mode can be calculated by the "FieldNetCalc" program. A description of this program can be found in Technical Information TI00400F/00/EN (Multidrop Conncector FXN520).
The program is available form your Endress+Hauser sales organisation or in the internet at:
"www.endress.com → select your country → download → search: Fieldnetcalc

Input

Measured variable

The distance D between the sensor membrane and the product surface is measured.

Using the linearization function, the device uses D to calculate:
- level L in any units
- volume V in any units
- Flow Q across measuring weirs or open channels in any units

Measuring range

The measuring range is limited by the range of a sensor. The sensor range is, in turn, dependent on the operating conditions. To estimate the actual range, proceed as follows (see also the calculation example in the diagram):

1. Determine which of the influences shown in the following table are appropriate for your process.
2. Add the corresponding attenuation values.
3. From the total attenuation, use the diagram to calculate the range.

Fluid surface	Attenuation
Calm	0 dB
Waves	5 to 10 dB
Strong turbulence (e.g. stirrers)	10 to 20 dB
Foaming	Please contact your Endress+Hauser sales representative.

Bulk material surface	Attenuation
Hard, rough (e.g. rubble)	40 dB
Soft (e.g. peat, dust-covered clinker)	40 to 60 dB

Dust	Attenuation
No dust formation	0 dB
Little dust formation	5 dB
Heavy dust formation	5 to 20 dB

Filling curtain in detection range	Attenuation
None	0 dB
Small quantities	5 to 10 dB
Large quantities	10 to 40 dB

Temperature difference between sensor and product surface	Attenuation
to 20 °C (68 °F)	0 dB
to 40 °C (104 °F)	5 to 10 dB
to 80 °C (176 °F)	10 to 20 dB

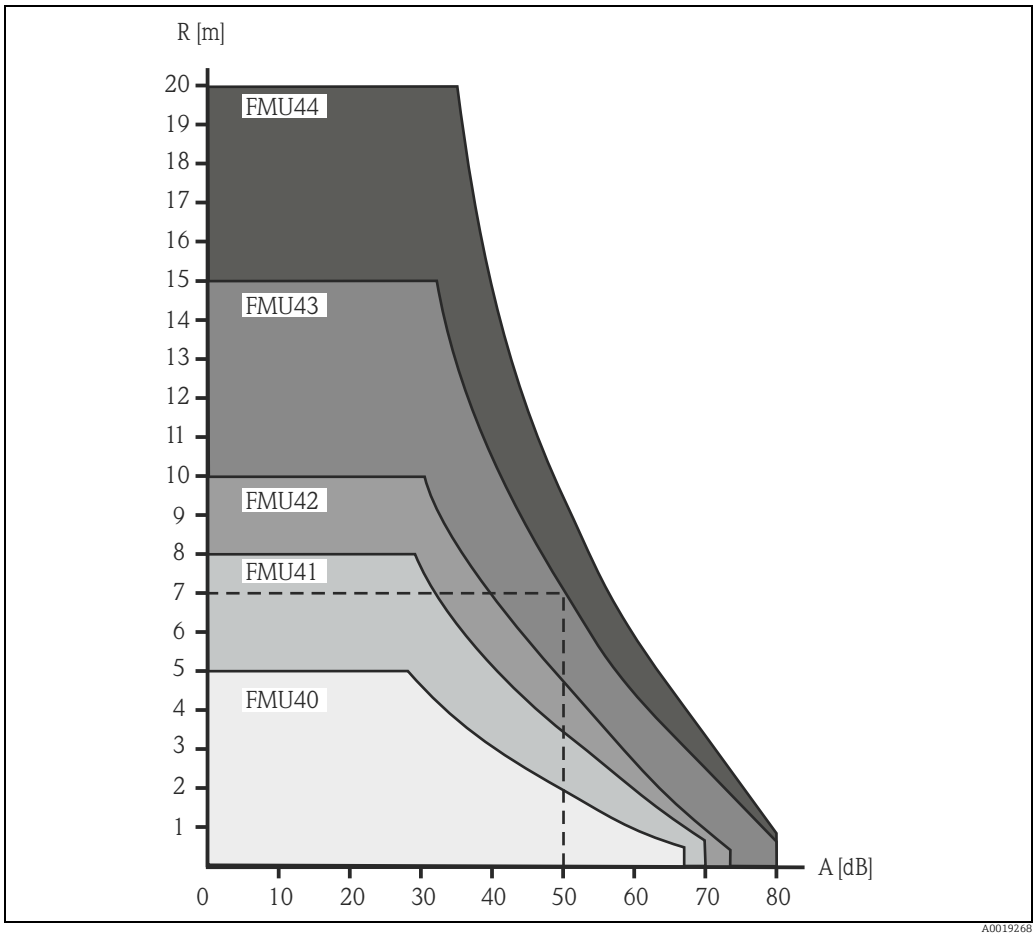

A Attenuation (dB)
R Range (m)

Example (for FMU43)

For typical solid applications, a certain amount of dust coverage is normally present. Therefore, the following range results from the table and the diagram:

▪ Dust-covered rubble	approx. 50 dB	
▪ No dust formation	0 dB	
▪ No filling curtain in detection range	0 dB	
▪ Temperature diff. < 20°C	0 dB	
	approx. 50 dB	⇒ range approx. 7 m (23 ft)

These measuring conditions have been taken into account during the calculation of the maximum measuring range in solid applications.

Operating frequency

Sensor	Operating frequency
FMU40	approx. 70 kHz
FMU41	approx. 50 kHz
FMU42	approx. 42 kHz
FMU43	approx. 35 kHz
FMU44	approx. 30 kHz

Output

Output signal

According to the instrument version ordered:
- 4...20 mA with HART protocol
- PROFIBUS PA
- FOUNDATION Fieldbus

Signal on alarm

Error information can be accessed via the following interfaces:
- On-site display (error symbol, error code and plain text description)
- Current output, signal on error can be selected (e.g. according to NAMUR recommendation NE43)
- Digital interface

Load HART

Minimum load for HART communication: 250 Ω

Output damping

Freely selectable, 0 to 255 s

Linearization

The linearization function of the Prosonic M allows conversion of the measured value into any unit of length or volume. In open channels or measuring weirs, also a flow linearization is possible (calculation of the flow from the measured level). The linearization table for calculating the volume in an horizontal cylindrical tank is preprogrammed. You can also enter any number of other tables containing up to 32 value pairs either manually or semi-automatically (by filling the vessel under controlled conditions). The supplied FieldCare operating program can automatically calculate the table for any tank, weir or flume and upload it into the device.
Flow curves for open channels can be calculated and entered into the instrument by the FieldCare as well (→ 29, "Operation with FieldCare").

Power supply

Terminal compartment

In the F12 housing, the terminals are located underneath the housing cover. In the T12 housing, they are under the cover of the separate terminal compartment.

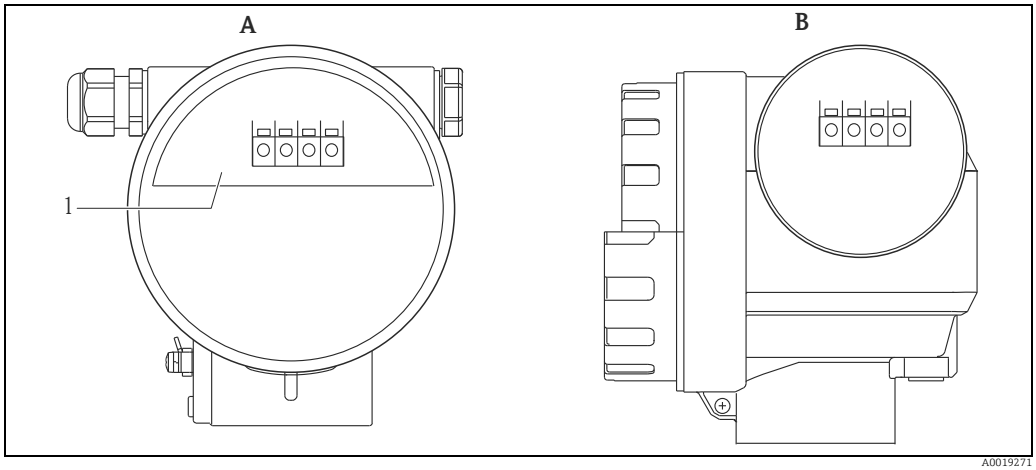

A *F12 housing*
B *T12 housing*
1 *Sealed terminal compartment*

Terminal assignment

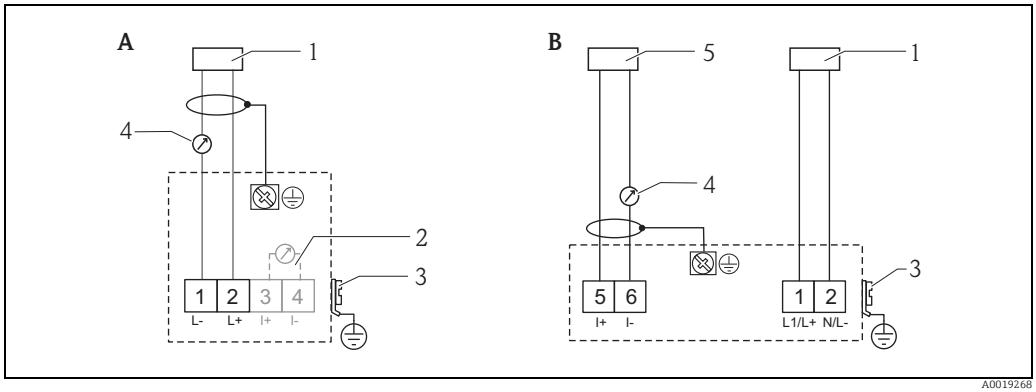

A *Loop-powered version*
B *4-wire version (active)*
1 *Power*
2 *Test clamp for testing of the signal current*
3 *Plant ground*
4 *4-20 mA HART*
5 *Display unit, recorder, PCS*

- Connect the connecting line to the screw terminals (line cross-sections of 0.5 to 2.5 mm^2 (20 to 14 AWG)) in the terminal compartment.
- Use 2-wire twisted pair cable with screen for the connection.
- Protective circuitry against reverse polarity, RFI and over-voltage peaks is built into the device (see also Technical Information TI00241F/00/EN "EMC Test Procedures") → 21, "Electromagnetic compatibility (EMC)".
- A standard installation cable is sufficient if only the analogue signal is used. Use a screened cable when working with a superimposed communication signal (HART).

PROFIBUS PA

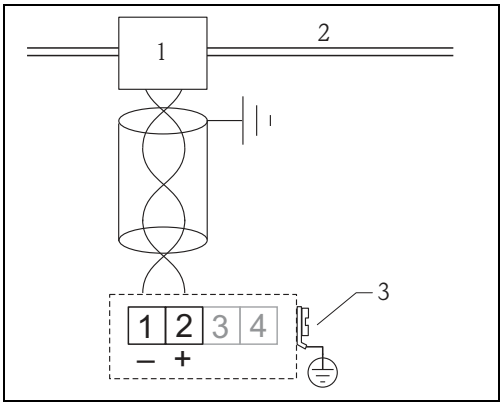

FOUNDATION Fieldbus

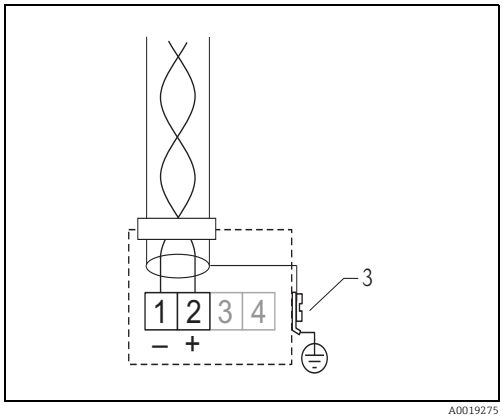

1 T-Box
2 PROFIBUS PA
3 Plant ground

The digital communication signal is transmitted to the bus via a 2-wire connection. The bus also provides the auxiliary energy. Use 2-wire twisted pair cable with screen.

Refer to the following operating manuals for information on cable types, and how to set up and ground the network:
- BA00034S "PROFIBUS DP/PA: "Guidelines for planning and commissioning PROFIBUS DP/PA", PNO Guideline 2.092 "PROFIBUS PA User and Installation Guideline" and IEC61158-2 (MBP).
- BA00013S "FOUNDATION Fieldbus Overview", FONDATION Fieldbus Guideline and IEC61158-2 (MBP).

Fieldbus plug connectors

For the versions with fieldbus plug connector (M12 or 7/8"), the signal line can be connected without opening the housing.

Pin assignment of the M12 plug connector (PROFIBUS PA plug)

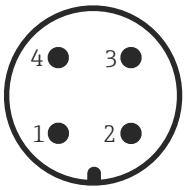

Pin	Meaning
1	Signal +
2	not connected
3	Signal -
4	Ground

Pin assignment of the 7/8" plug connector (FOUNDATION Fieldbus plug)

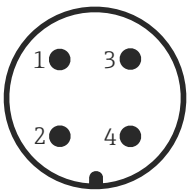

Pin	Meaning
1	Signal -
2	Signal +
3	Shield
4	Not connected

Supply voltage

HART, 2-wire

The following values are the voltages across the terminals directly at the instrument:

Version		Current consumption	Terminal voltage minimum	Terminal voltage maximum
2-wire HART	Standard	4 mA	14 V	36 V
		20 mA	8 V	36 V
	Ex ia	4 mA	14 V	30 V
		20 mA	8 V	30 V
	Ex d	4 mA	14 V	30 V
		20 mA	11 V	30 V
Fixed current, adjustable, e.g. for solar power operation (measured value via HART)	Standard	11 mA	10 V	36 V
	Ex ia	11 mA	10 V	30 V
Fixed current for HART multidrop mode	Standard	4 mA[1)]	14 V	36 V
	Ex ia	4 mA[1]	14 V	30 V

1) Start-up current 11 mA

HART, 4-wire, active

Version	Voltage	Max. load
DC	10.5 to 32 V	600 Ω
AC 50/60 Hz	90 to 253 V	600 Ω

Terminals

Cable cross-section: 0.5 to 2.5 mm2 (20 to 14 AWG)

Cable entry

- Cable gland: M20x1.5 (recommended cable diameter 6 to 10 mm (0.24 to 0.39 in))
- Cable entry G ½" or NPT ½"
- PROFIBUS PA M12 plug
- FOUNDATION Fieldbus 7/8" plug

Power consumption

Version	Power consumption
2-wire	51 mW to 800 mW
4-wire AC	max. 4VA
4-wire DC; FMU40/41	330 mW to 830 mW
4-wire DC; FMU42/43	600 mW to 1 W

Current consumption (2 wire instruments)

Communication	Current consumption
HART	3.6 to 22 mA
PROFIBUS PA	max. 13 mA
FOUNDATION Fieldbus	max. 15 mA

HART ripple

47 to 125 Hz: Vpp = 200 mV (measured at 500 Ω)

Max. noise HART

500 Hz to 10 kHz: Vrms = 2.2 mV (measured at 500 Ω)

Galvanic isolation

With 4-wire devices, the evaluation electronics and mains voltage are galvanically isolated from each other.

Performance characteristics

Reaction time

The reaction time depends on the parameter settings. The minimum values are:

- 2-wire devices (FMU40/41/42): min. 2 s
- 2-wire diveces (FMU43 - PROFIBUS PA or FOUNDATION Fieldbus): min. 2 s
- 2-wire devices (FMU44): min. 3 s
- 4-wire devices (FMU40/41/42/43/44): 0.5 s

Reference operating conditions

- Temperature = +20 °C (+68 °F)
- Pressure = 1013 mbar abs. (15 psi abs.)
- Humidity = 50 %
- Ideal reflective surface (e.g. calm, smooth fluid surface)
- No interference reflections within signal beam
- Set application parameters:
  - Tank shape = dome ceiling
  - Medium property = liquid
  - Process conditions = standard liquid

Measured value resolution

Sensor	Measured value resolution
FMU40	1 mm (0.04 in)
FMU41	1 mm (0.04 in)
FMU42	2 mm (0.08 in)
FMU43	2 mm (0.08 in)
FMU44	2 mm (0.08 in)

Pulse frequency

- 2-wire devices (FMU40/41/42): max. 0.5 Hz
- 2-wire devices (FMU43 - PROFIBUS PA or FOUNDATION Fieldbus): max. 0.5 Hz
- 2-wire devices (FMU44): max. 0.3 Hz
- 4-wire devices (FMU40/41/42/43/44): max. 2 Hz

The exact values are dependent on the type of device and the parameter settings.

Maximum measuring error[1)] [2)]

±0.2 % of the maximum span of the sensor

Typical measuring error[2)]

Include linearity, repeatability and hysteresis
Better than:

Sensor	Measuring error
FMU40	±2 mm (0.08 in) or 0.2 % of measuring distance*
FMU41	±2 mm (0.08 in) or 0.2 % of measuring distance*
FMU42	±4 mm (0.16 in) or 0.2 % of measuring distance*
FMU43	±4 mm (0.16 in) or 0.2 % of measuring distance*
FMU44	±4 mm (0.16 in) or 0.2 % of measuring distance*

* whichever is greater

1) according to EN 61298-2
2) with reference operating conditions

Influence of the vapor pressure

The vapor pressure at 20 °C (68 °F) gives a hint on the accuracy of the ultrasonic level measurement. If the vapor pressure at 20 °C (68 °F) is below 50 mbar (1 psi), ultrasonic level measurement is possible with a very high accuracy. This is valid for water, aqueous solutions, water-solid-solutions, dilute acids (hydrochloric acid, sulfuric acid, ...), dilute bases (caustic soda, ...), oils, greases, slurries, pastes, ... High vapor pressures or outgassing media (ethanol, acetone, ammonia, ...) can influence the accuracy. If conditions like these are present, please contact your Endress+Hauser sales representative.

Installation

Installation variants FMU40, FMU41

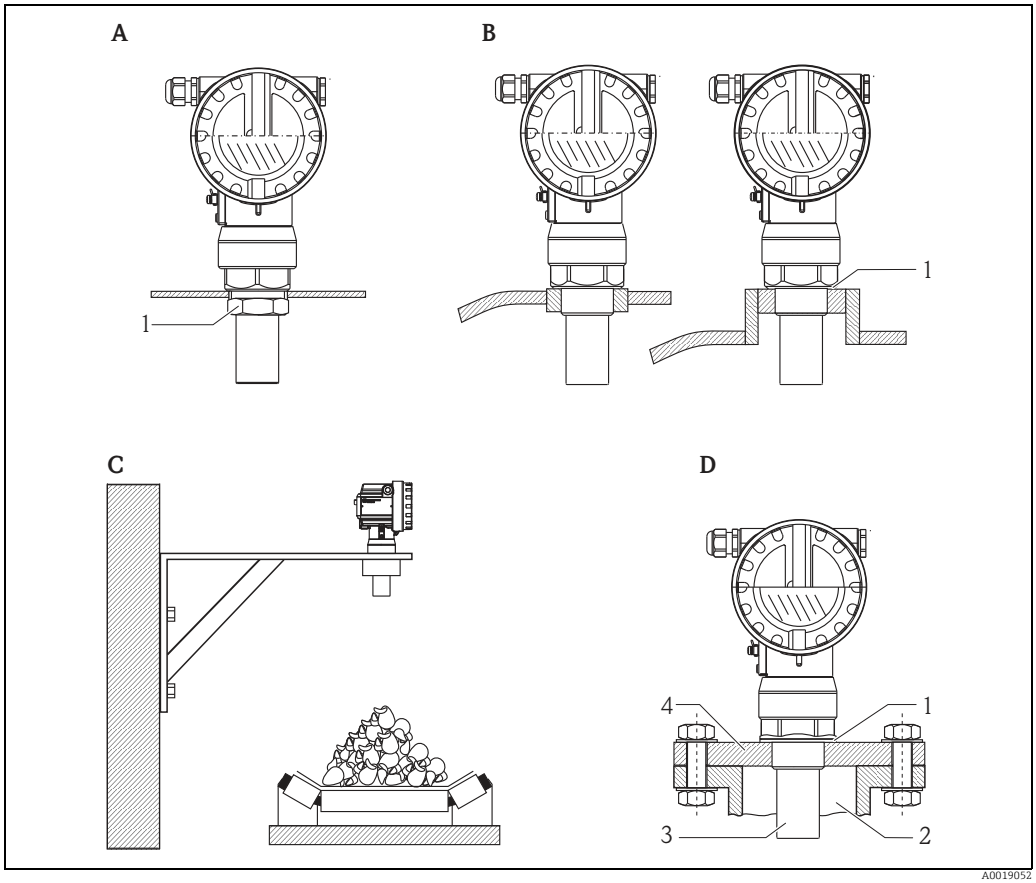

A *Installation with counter nut*
1 Counter nut (PC) supplied for G 1½" and G 2" instruments
B *Installation with sleeve*
1 Sealing (EPDM) supplied
C *Installation with installation bracket*
D *Installation with screw in flange*
1 Sealing (EPDM) supplied
2 Nozzle
3 Sensor
4 Screw in flange

For installation bracket or adapter flange → 📄 43, "Accessories".

Installation variants FMU42, FMU44

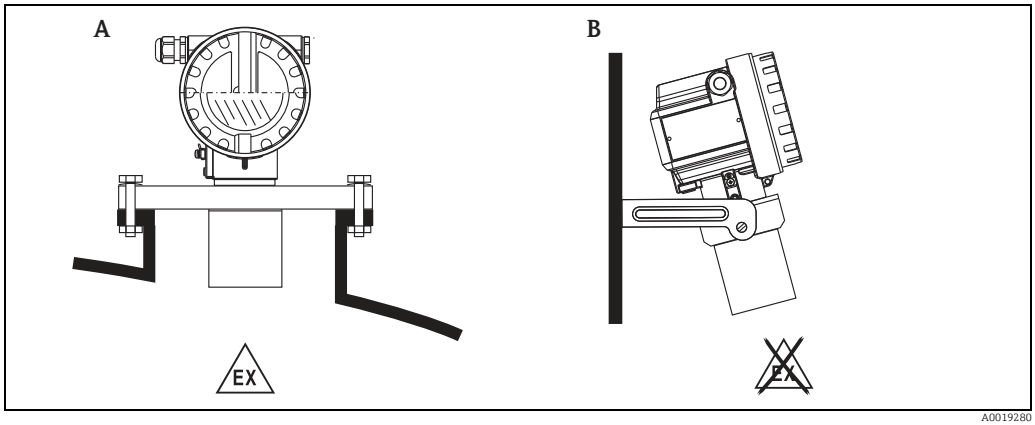

A *Installation with universal flange (Ex-hazardous, e.g. Zone 20)*
B *Installation with mounting bracket (Non-Ex-hazardous, Zone 20)*

Installation variants FMU43

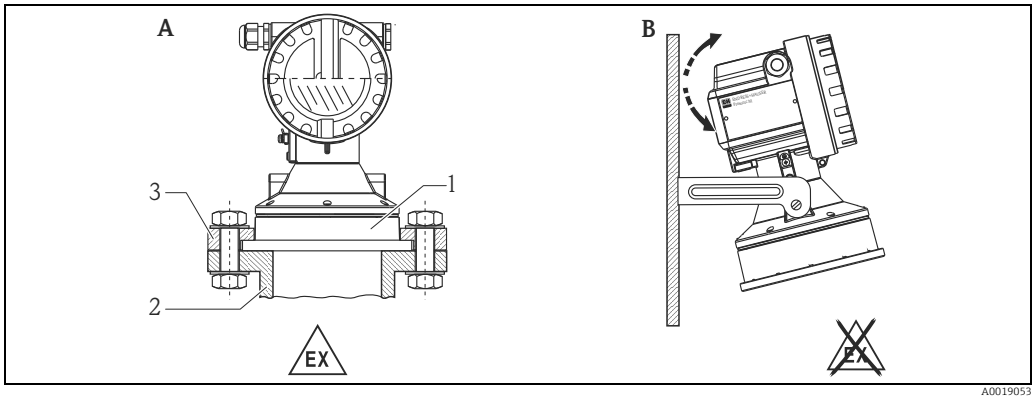

A *Installation with universal slip-on flange (option), (Ex-hazardous, e.g. Zone 20)*
1 *Sensor*
2 *Nozzle*
3 *Slip-on flange*
B *Installation with mounting bracket (Non-Ex-hazardous, Zone 20)*

Installation conditions for level measurements

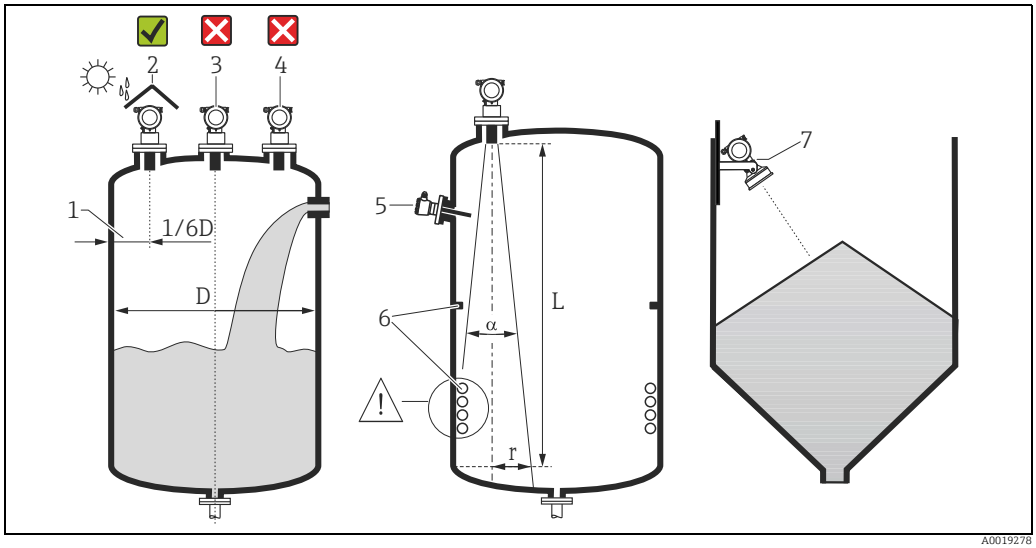

- Do not install the sensor in the middle of the tank (3). We recommend leaving a distance between the sensor and the tank wall (1) measuring 1/6 of the tank diameter.
- Use a protective cover, in order to protect the device from direct sun or rain (2) → 📄 43, "Weather protection cover".

- Avoid measurements through the filling curtain (4).
- Make sure that equipment (5) such as limit switches, temperature sensors, etc. are not located within the emitting angle α. In particular, symmetrical equipment (6) such as heating coils, baffles etc. can influence measurement.
- Align the sensor so that it is vertical to the product surface (7).
- Never install two ultrasonic measuring devices in a tank, as the two signals may affect each other.
- To estimate the detection range, use the 3 dB emitting angle α.

Sensor	α	L_{max}	r_{max}
FMU40	11°	5 (16)	0.48 (1.6)
FMU41	11°	8 (26)	0.77 (2.5)
FMU42	9°	10 (33)	0.79 (2.6)
FMU43	6°	15 (49)	0.79 (2.6)
FMU44	11 °	20 (66)	1.93 (6.3)

m (ft)

Installation in narrow shafts

In narrow shafts with strong interference echoes, we recommend using an ultrasound guide pipe (e.g. PE or PVC wastewater pipe) with a minimum diameter of 100 mm (3.94 in).
Make sure that the pipe is not soiled by accumulated dirt. If necessary, clean the pipe at regular intervals.

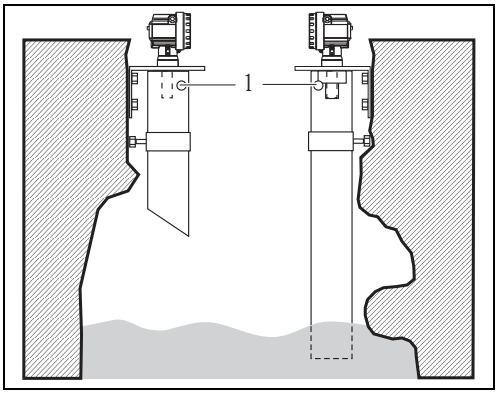

1 Venting hole

Installation conditions for flow measurements

- Install the Prosonic M at the inflow side, as close above the maximum water level H_{max} as possible (take into account the blocking distance BD).
- Position the Prosonic M in the middle of the channel or weir.
- Align the sensor membrane parallel to the water surface.
- Keep to the installation distance of the channel or weir.
- You can enter the "Flow to Level" linearization curve ("Q/h curve") using FieldCare or manually via the on-site display.

Example: Khafagi-Venturi flume

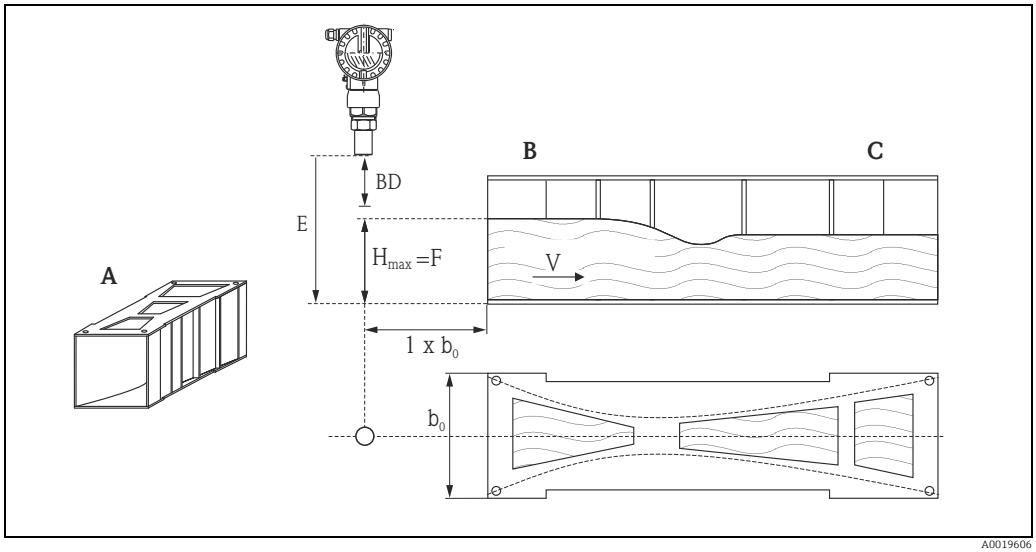

A *Khafagi-Venturi flume*
B *Inflow*
C *Outflow*

BD Blocking distance
E Empty calibration
F Full calibration
V Direction of flow

Example: Triangular weir

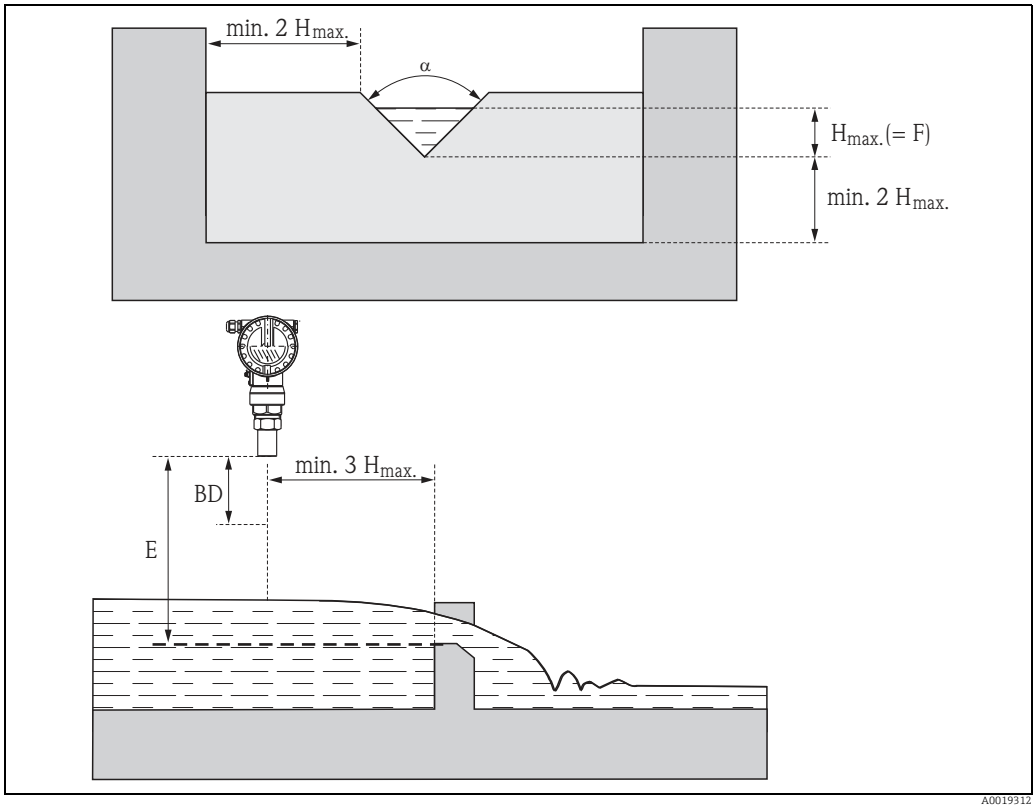

BD Blocking distance
E Empty calibration
F Full calibration

Blocking distance, nozzle installation

Install the Prosonic M at a height so that the blocking distance BD is not undershot, even at maximum fill level. Use a pipe nozzle if you cannot maintain the blocking distance in any other way. The interior of the nozzle must be smooth and may not contain any edges or welded joints. In particular, there should be no burr on the inside of the tank side nozzle end. Note the specified limits for nozzle diameter and length. To minimise disturbing factors, we recommend an angled socket edge (ideally 45°).

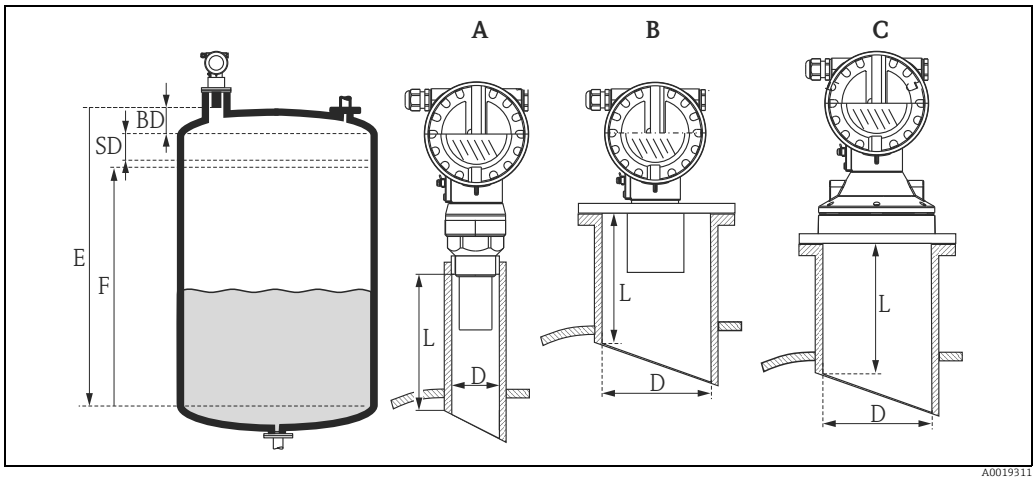

A *FMU40, FMU41*
B *FMU42, FMU44*
C *FMU43*

BD Blocking distance
SD Safety distance
E Empty calibration
F Full calibration (span)
D Nozzle diameter
L Nozzle length

	Maximum nozzle length [mm (in)]				
Nozzle diameter	**FMU40**	**FMU41**	**FMU42**	**FMU43**	**FMU44**
DN50/2"	80 (3.15)	–	–	–	–
DN80/3"	240 (9.45)	240 (9.45)	250 (9.84)	–	–
DN100/4"	300 (11.8)	300 (11.8)	300 (11.8)	300 (11.8)	–
DN150/6"	400 (15.7)	400 (15.7)	400 (15.7)	300 (11.8)	400 (15.7)
DN200/8"	400 (15.7)	400 (15.7)	400 (15.7)	300 (11.8)	400 (15.7)
DN250/10"	400 (15.7)	400 (15.7)	400 (15.7)	300 (11.8)	400 (15.7)
DN300/12"	400 (15.7)	400 (15.7)	400 (15.7)	300 (11.8)	400 (15.7)
Sensor characteristics					
Emitting angle α	11°	11°	9°	6°	11°
Blocking distance [m (ft)]	0.25 (0.8)	0.35 (1.1)	0.4 (1.3)	0.6 (2.0)	0.5 (1.6)
Max. range [m (ft)] in liquids	5 (16.0)	8 (26.0)	10 (33.0)	15 (49.0)	20 (66.0)
Max. range [m (ft)] in solids	2 (6.6)	3.5 (11.0)	5 (16.0)	7 (23.0)	10 (33.0)

Caution!
If the blocking distance is undershot, it may cause device malfunction.

Note!
In order to notice if the level approaches the blocking distance, you can specify a safety distance (SD). If the level is within this safety distance, the Prosonic M outputs a warning or alarm message.

Environment

Ambient temperature	−40 °C to +80 °C (−40 °F to +176 °F) The functionality of the LC display becomes restricted at Tu<−20 °C (Tu<−4 °F) and Tu>+60 °C (Tu>140 °F). If the device is operated outdoors in strong sunlight, you should use a protective cover (→ 43).
Storage temperature	−40 °C to +80 °C (−40 °F to +176 °F)
Resistance to alternating temperature cycles	To DIN EN 60068-2-14; Nb test: +80°C/−40°C (+176 °F/−40 °F), 1K/min, 100cycles
Climate class	DIN EN 60068-2-38 (Test Z/AD) DIN/IEC 68 T2-30Db
Ingress protection	▪ With closed housing, tested according to – IP68, NEMA 6P (24h at 1.83 m (6 ft) under water surface) – IP66, NEMA 4x ▪ With open housing: IP20, NEMA 1 (also ingress protection of the display) Caution! Degree of protection IP68 NEMA 6P applies for M12 PROFIBUS-PA plugs and for 7/8" FF plug only when the cable is plugged in.
Vibration resistance	DIN EN 60068-2-64 / IEC 68-2-64: 20…2000 Hz, 1 $(m/s^2)^2$/Hz; 3 x 100 min
Electromagnetic compatibility (EMC)	▪ Electromagnetic compatibility according to all relevant requirements of the EN 61326- series and NAMUR recommendation EMC (NE21). For details see declaration of conformity. ▪ A standard installation cable is sufficient if only the analogue signal is used. Use a screened cable when working with a superimposed communication signal (HART).

Process

Process temperature	−40°C to +80°C (−40 °F…+176 °F) A temperature sensor is integrated in the sensor for correction of the temperature-dependent time-of-flight.
Process pressure	▪ FMU40/41: 0.7 bar to 3bar abs. (10.15 psi…43.5 psi abs.) ▪ FMU42/43/44: 0.7 bar to 2.5bar abs. (10.15 psi…36.25 psi abs.)

Mechanical construction

Design; dimensions **FMU40, FMU41**

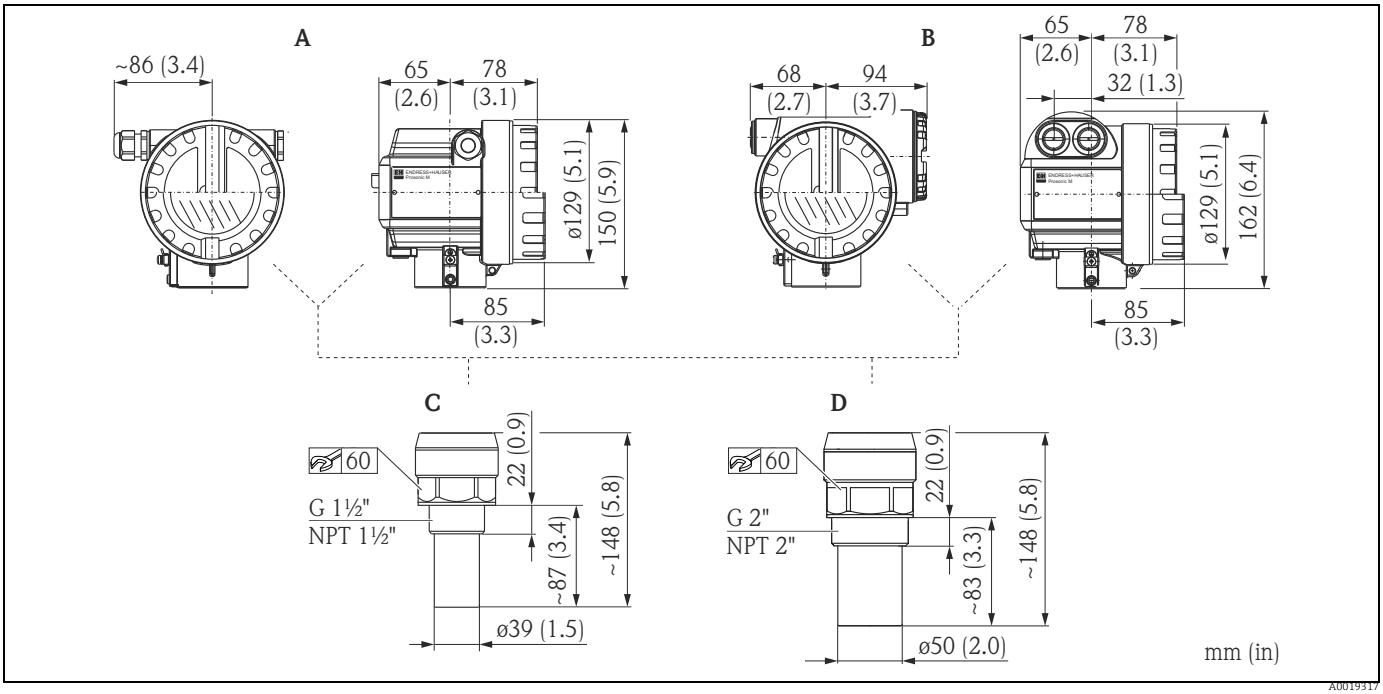

A *F12 housing* *B* *T12 housing*
C *FMU40* *D* *FMU41*

FMU42, FMU44 with slip-on flange

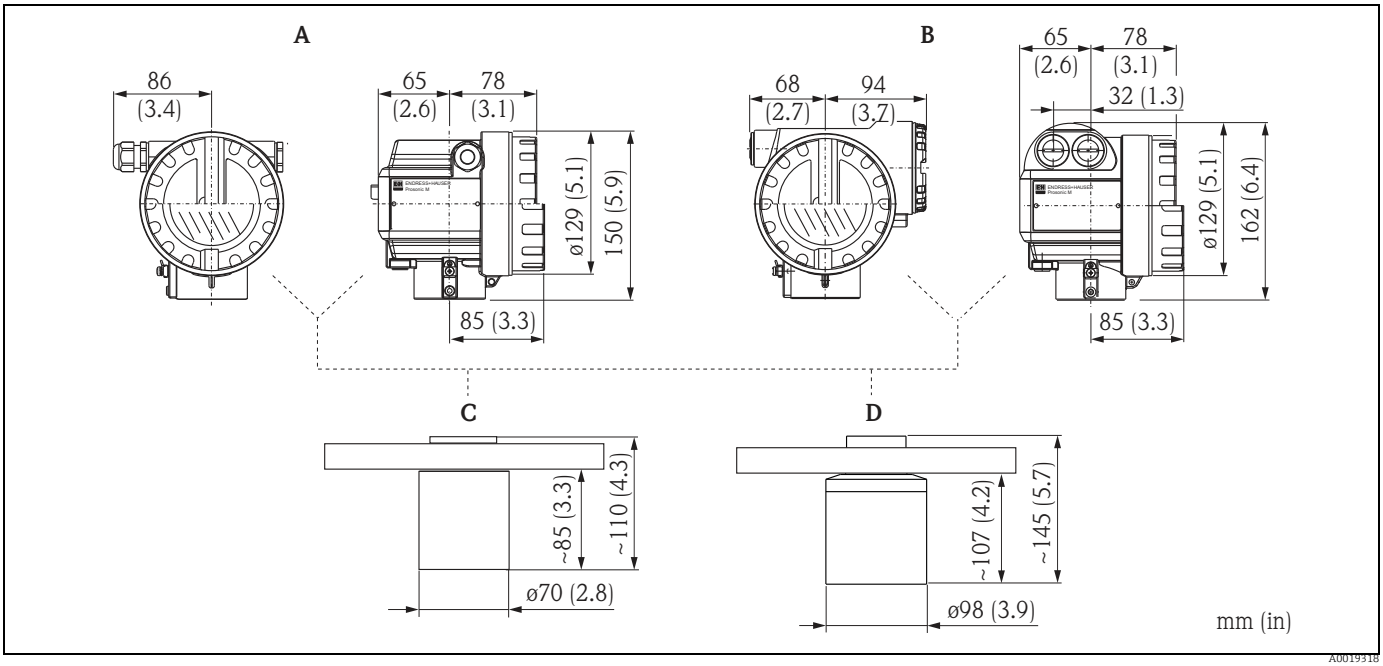

A *F12 housing* *B* *T12 housing*
C *FMU42* *D* *FMU44*

FMU42, FMU44 with mounting bracket

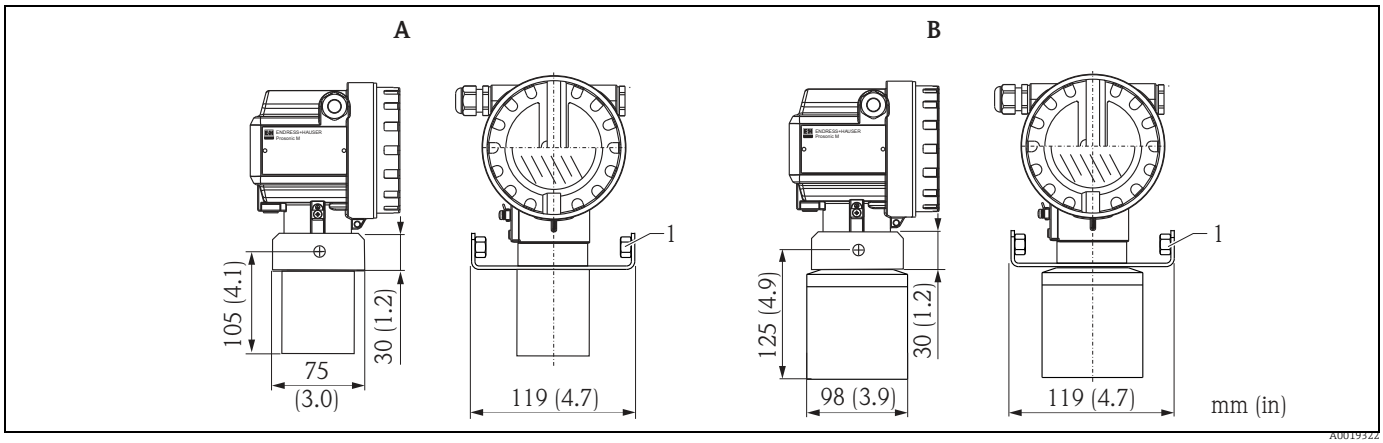

A *FMU42 (T12, F12 housing)*
B *FMU44 (T12, F12 housing)*
1 *M8*

FMU43

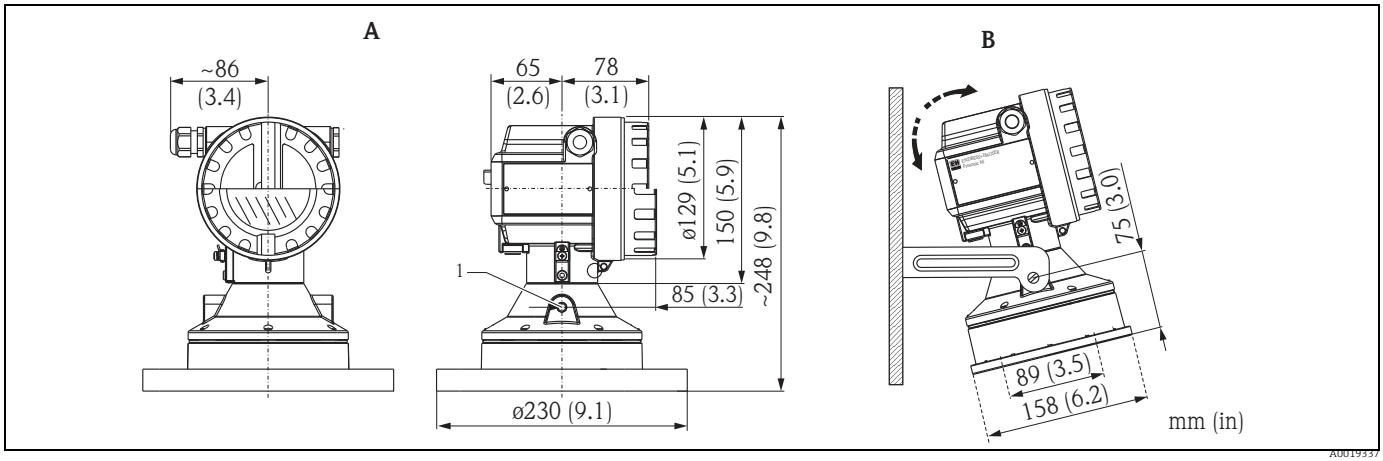

A *With slip-on flange (ANSI 4" DN 100)*
B *With mounting bracket (F12 housing)*
1 *2xM8*

Mounting bracket for FMU42, FMU43 and FMU44

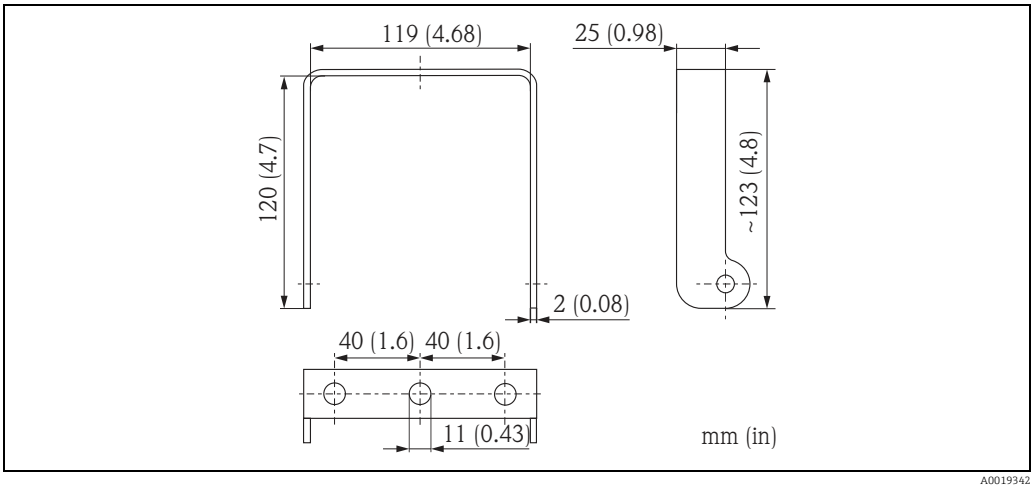

Flanges for FMU42 and FMU44

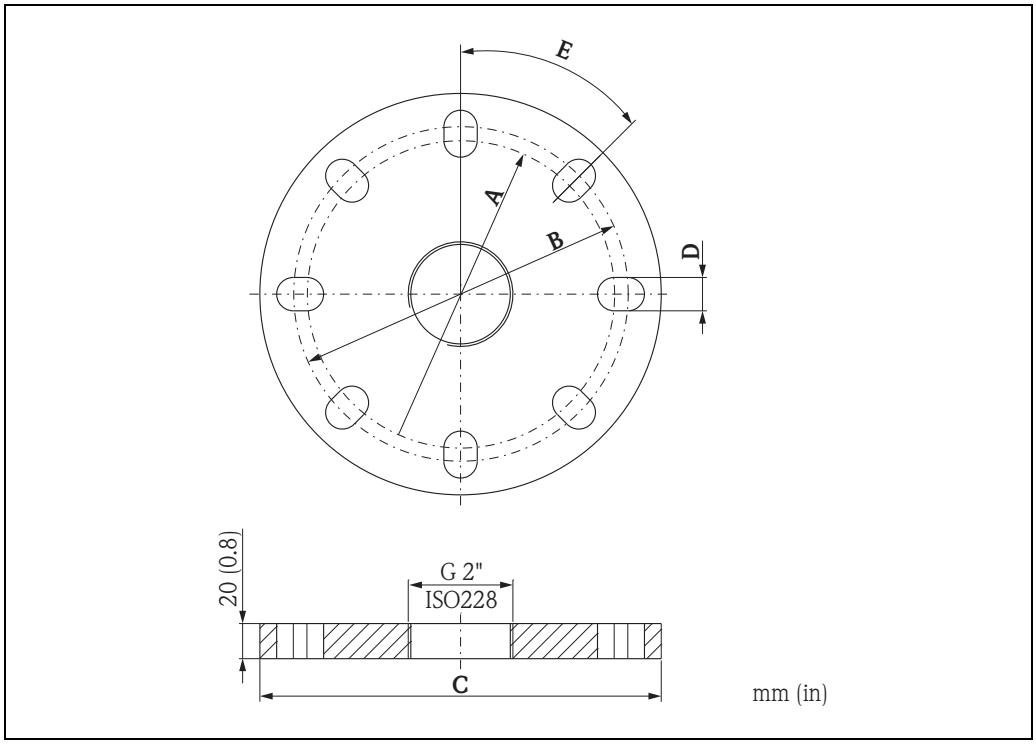

A0019343

suitable for	A	B	C	D	E	number of boreholes
3" 150 lbs / DN80 PN16 / 10K 80	150 mm (5.91")	160 mm (6.30")	200 mm (7.87")	19 mm (0.75")	45°	8
4" 150 lbs / DN100 PN16 / 10K 100	175 mm (6.90")	190.5 mm (7.50")	228.6 mm (9.00")	19 mm (0.75")	45°	8
6" 150 lbs / DN150 PN16 / 10 K 150	240 mm (9.45")	241.3 mm (9.50")	285 mm (11.22")	23 mm (0.91")	45°	8
8" 150 lbs	298.5 mm (11.75")	298.5 mm (11.75")	342.9 mm (13.50")	22. 5 mm (0.89")	45°	8
DN200 PN16 / 10 K 200	290 mm (11.42")	295 mm (11.61")	340 mm (13.39")	23 mm (0.91")	30°	12

Weight

Sensor	Weight kg (lbs)
FMU40	approx. 2.5 (5.51)
FMU41	approx. 2.6 (5.73)
FMU42	approx. 3 (6.62)
FMU43	approx. 3.5 (7.72)
FMU44	approx. 4 (8.82)

Housing design

Types of housings

- F12 housing with sealed terminal compartment for standard or Ex ia applications
- T12 housing with separate terminal compartment and explosionproof encapsulation

Material

Aluminium, powder-coated (→ 📄 26)

Cover

- Aluminium, for version without on-site display
- Inspection glass for version with on-site display. This version cannot be supplied together with the ATEX II 1/2 D certificate.

Process connection

Sensor	Process connection
FMU40	▪ Thread G 1½“ ▪ Thread NPT 1½“ - 11.5
FMU41	▪ Thread 2" ▪ Thread NPT 2" - 11.5
FMU42	▪ Universal flange DN 80 PN16 / ANSI 3" 150 lbs / JIS 10K 80 ▪ Universal flange DN 100 PN16 / ANSI 4" 150 lbs / JIS 10K 100 ▪ Mounting bracket
FMU43	▪ Universal flange DN 100 / ANSI 4" / JIS16K100 ▪ Mounting bracket
FMU44	▪ Universal flange DN 100 PN16 / ANSI 4" 150 lbs / JIS 10K 100 ▪ Universal flange DN 150 PN16 / ANSI 6" 150 lbs / JIS 10K 150 ▪ Universal flange DN200 PN16 / JIS 10K 200 ▪ Flange ANSI 8" 150 lbs ▪ Mounting bracket

Material (not in contact with process)

T12 and F12 housing (powder-coated)

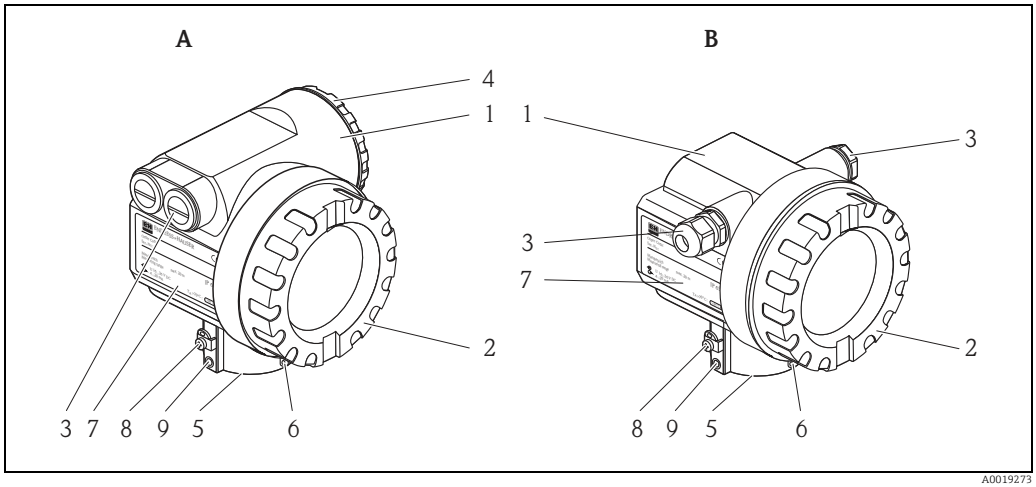

A *T12 housing*
B *F12 housing*

Pos.	Part	Material
1	T12 and F12 housing	AlSi10Mg
2	Cover (Display)	AlSi10Mg
	O-ring	EPDM
	Window	ESG-K-Glass
	Sealing of the glass	Silicone sealing compound Gomastit 402
3	Cable gland	Polyamid (PA), CuZn nickel-plated
	O-Ring	EPDM
	Plug	PBT-GF30 or 1.0718 galvanized
		PE or 3.1655
	Adapter	316L (1.4435) or AlMgSiPb (anodized)
4	Cover (Connection compartment)	AlSi10Mg
	O-ring	EPDM
	Clamp	Screw: A4; Clamp: CuZn nickel-plated; Spring washer: A4
5	O-ring	EPDM
6	Tag	304 (1.4301)
	Rope	VA
	Crimp sleeve	Aluminium
7	Nameplate	316L (1.4404)
	Groove pin	A4 (1.4571)
8	Ground terminal	Screw: A2; Springwasher: A4; Clamp: 304 (1.4301) Holder: 301 (1.4310)
9	Screw	A2-70

Note!
Seawater-resistant parts please order on request (complete in 316L (1.4404)).

Material (in contact with process)

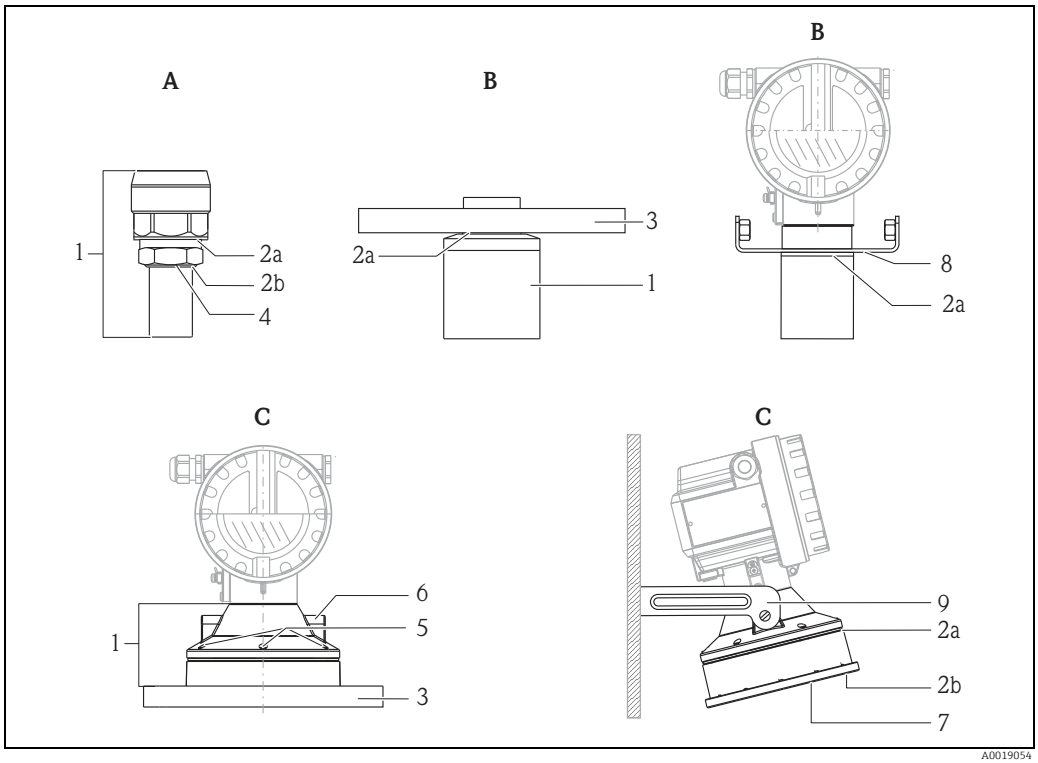

Pos.	Part	A FMU40, FMU41	B FMU42, FMU44	C FMU43
1	Sensor	PVDF	PVDF	UP (Unsaturated polyester resin)
2a	Sealing	EPDM	EPDM or FKM	EPDM
2b	O-ring	EPDM	-	EPDM
3	Flange	-	PP, PVDF or stainless steel 316L (1.4435 or 1.4404) [1]	PP or 316 Ti (1.4571)
4	Counter nut	PC	-	-
5	Screws	-	-	V2A
6	Thread insert for mounting bracket	-	-	CuZn
7	Sensor membrane	-	-	316 Ti (1.4571)
8	Mounting bracket (retainer) Screws	- -	316 Ti (1.4571) V4A	- -
9	Mounting bracket Screws	- -	316 Ti (1.4571) V2A	316 Ti (1.4571) V2A

1) Endress+Hauser supplies DIN/EN flanges made of stainless steel AISI 316L with the material number 1.4404 or 1.4435. With regard to their temperature stability properties, the materials 1.4404 and 1.4435 are grouped under 13E0 in EN 1092-1 Tab. 18. The chemical composition of the two materials can be identical.

Note!
The chemical compatibility of the sensors must be checked before installation with compatibility charts.

Operability

Display and operating elements

The LCD module VU331 for display and operation is located beneath the housing cover. The measured value is legible through the glass in the cover. Open the cover to operate the device.

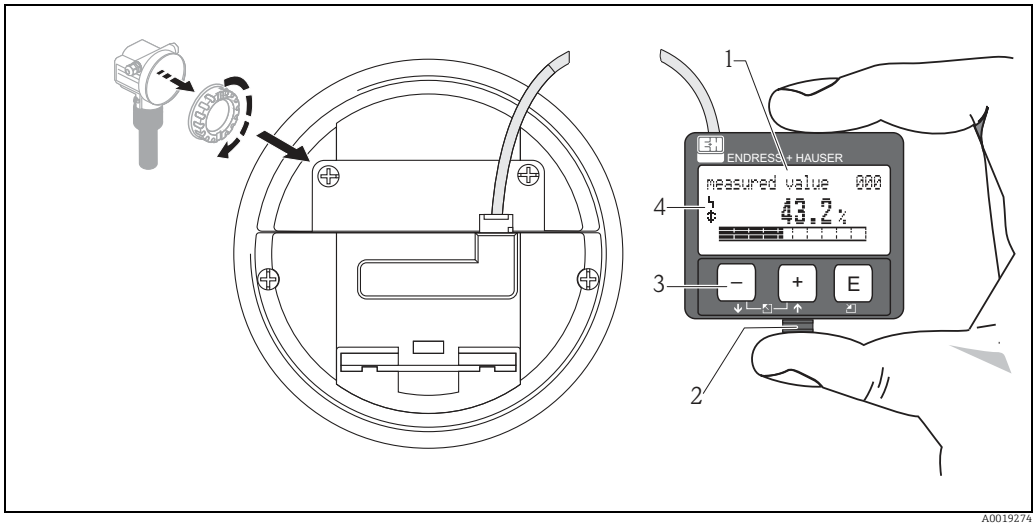

1 LCD liquid crystal display
2 Snap fit
3 Keys
4 Symbols

Symbol in display	continuous	flashing		
Meaning	Alarm	Warning	Communication	Security Locking

Function of the keys

Key(s)	**Meaning**
+	Navigate upwards in the selection list Edit numeric value within a function
–	Navigate downwards in the selection list Edit numeric value within a function
– + (Esc)	Navigate to the left within a function group
E	Navigate to the right within a function group, confirmation.
+ and E or – and E	Contrast settings of the LCD
+ and – and E	Hardware lock / unlock After a hardware lock, an operation of the instrument via display or communication is not possible! The hardware can only be unlocked via the display. An unlock parameter must be entered to do so (unlock parameter: 100).

On-site operation

Operation with VU331

The LC-Display VU331 allows configuration via 3 keys directly at the instrument. All device functions can be set through a menu system. The menu consists of function groups and functions. Within a function, application parameters can be read or adjusted. The user is guided through a complete configuration procedure. For ease operation can choose between 4 language (PROFIBUS PA) or 7 language (HART, FOUNDATION Fieldbus): (de: german; en: english; es: spanish*; fr: french; it: italian*; ja: japanese; nl: dutch*).
*) HART and FOUNDATION Fieldbus only

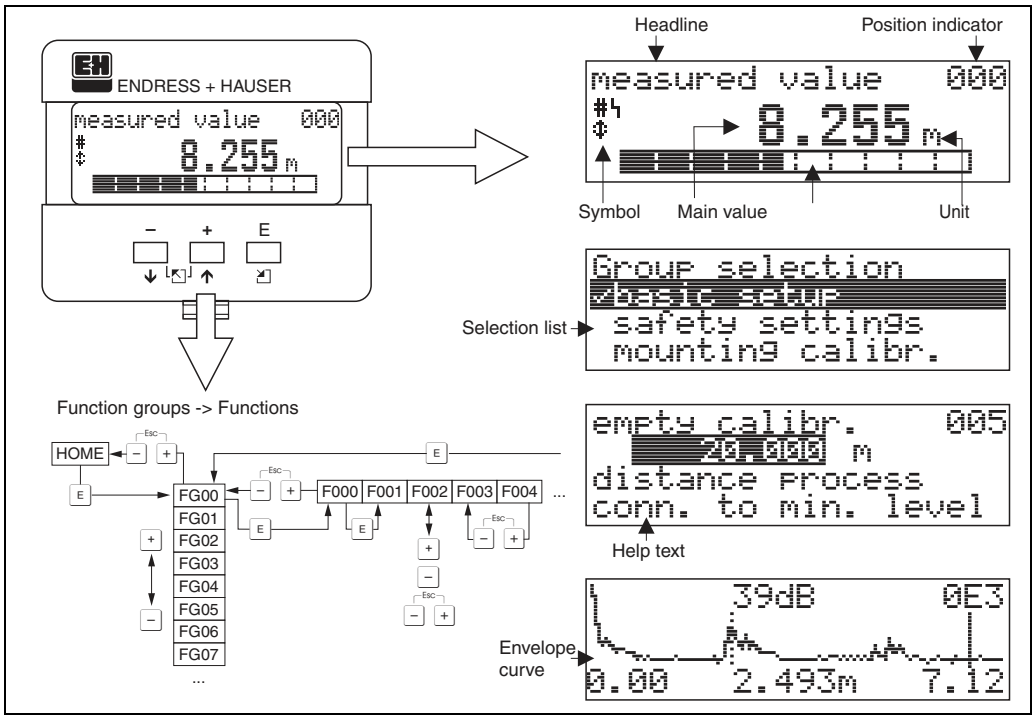

Operation via Field Xpert

Compact, flexible and robust industry handheld terminal for remote parametrization and measured value inspection via the HART current output or FOUNDATION Fieldbus. For details refer to Operating Instructions BA00060S/04/EN.

Remote operation

Operation with FieldCare

FieldCare is Endress+Hauser's FDT based Plant Asset Management Tool. It can configure all intelligent field devices in your plant and supports you in managing them. By using status information, it also provides a simple but effective means of checking their health. Hardware and software requirements you can find on the internet: www.endress.com → select your country → search: FieldCare → FieldCare → Technical Data.

The FieldCare supports the following functions:
- Configuration of transmitters in online operation
- Signal analysis via envelope curve
- Tank linearization
- Loading and saving of instrument data (Upload/Download)
- Documentation of measuring point

Connection options
- HART with Commubox FXA195 and the USB port on a computer
- PROFIBUS PA via segment coupler and PROFIBUS interface card
- Commubox FXA291 with ToF Adapter FXA291 (USB) via service interface

Menu-guided commissioning:

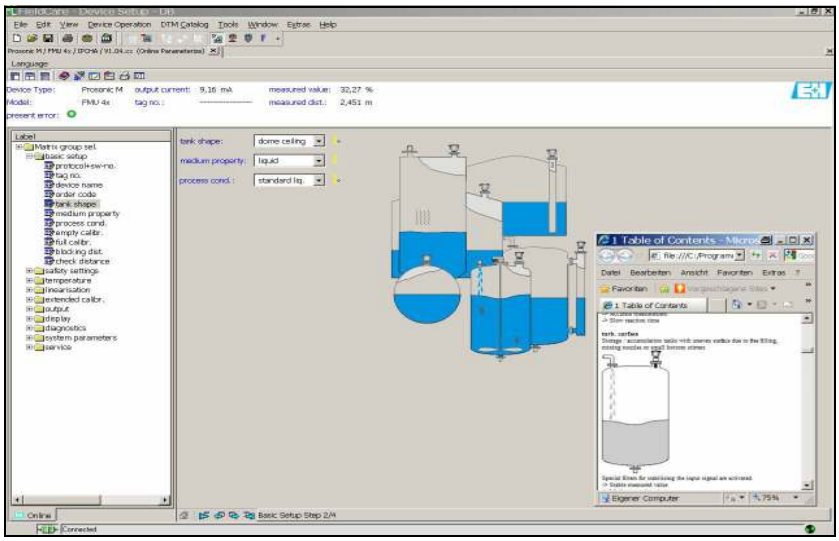

L00-FMU4xxxx-19-00-00-en-021

Signal analysis via envelope curve:

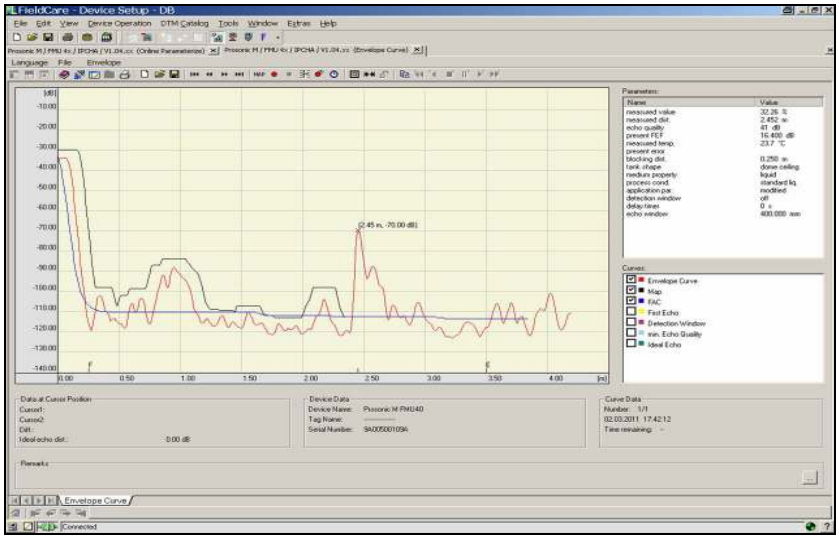

L00-FMU4xxxx-19-00-00-en-022

Operation with NI-FBUS Configurator (only FOUNDATION Fieldbus)

The NI-FBUS Configurator is an easy-to-use graphical environment for creating linkages, loops, and a schedule based on the fieldbus concepts.

You can use the NI-FBUS Configurator to configure a fieldbus network as follows:
- Set block and device tags
- Set device addresses
- Create and edit function block control strategies (function block applications)
- Configure vendor-defined function and transducer blocks
- Create and edit schedules
- Read and write to function block control strategies (function block applications)
- Invoke Device Description (DD) methods
- Display DD menus
- Download a configuration
- Verify a configuration and compare it to a saved configuration
- Monitor a downloaded configuration
- Replace devices
- Save and print a configuration

Certificates and Approvals

CE mark

The measuring system meets the legal requirements of the EC-guidelines. Endress+Hauser confirms the instrument passing the required tests by attaching the CE-mark.

Ex approval

The available certificates are listed in the ordering information. Note the associated safety instructions (XA) and control or installation drawings (ZD).

External standards and guidelines

EN 60529

Protection class of housing (IP-code)

EN 61326 series

EMC product family standard for electrical equipment for measurement, control and laboratory use

NAMUR

User association for automation technology in process industries

Ordering information

Product structure FMU40 Versions that mutually exclude one another are not marked.

010	Certificates
A	Variant for non-hazardous area
E	NEPSI Ex nA IIC T6 Gc
G	ATEX II 3G Ex nA IIC T6 Gc
I	NEPSI Ex ia IIC T6
J	NEPSI Ex d(ia) IIC T6
K	INMETRO Ex ia IIC T6 Ga/Gb
L	INMETRO Ex d [ia] IIC T6 Ga/Gb
N	CSA General Purpose
Q	NEPSI DIP
S	FM IS Cl. I,II,III Div. 1 Gr. A-G / NI Cl. I Div. 2
T	FM XP Cl. I,II,III Div. 1 Gr. A-G
U	CSA IS Cl. I,II,III Div. 1 Gr. A-G / NI Cl. I Div. 2
V	CSA XP Cl. I,II,III Div. 1 Gr. A-G
1	ATEX II 1/2G Ex ia IIC T6 Ga/Gb
2	ATEX II 1/2D, Alu blind cover
4	ATEX II 1/2G Ex d (ia) IIC T6 Ga/Gb
5	ATEX II 1/3D
6	ATEX II 3D Ex ta IIIC T* °C Dc
Y	Special certificate

020	Process connection
R	G 1½“ threadISO 228
N	NPT 1½“ - 11,5 thread
Y	Special version

030	Power supply/communication
B	2 wire, 4...20mA-loop/HART
H	4 wire, 10,5...32 VDC / 4-20mA HART
G	4 wire, 90...253 VAC / 4-20mA HART
D	2 wire, PROFIBUS PA
F	2 wire, FOUNDATION Fieldbus
J	2-wire, 4-20mA HART, 5-point linearity protocol
K	2-wire, PROFIBUS PA, 5-point linearity protocol
L	2-wire, FOUNDATION Fieldbus, 5-point linearity protocol
M	4-wire, 90-253VAC; 4-20mA HART, 5-point linearity protocol
N	4-wire, 10.5-32VDC;4-20mA HART, 5-point linearity protocol
P	2-wire, 4-20mA HART, 3-point linearity protocol
Q	2-wire, PROFIBUS PA, 3-point linearity protocol
R	2-wire, FOUNDATION Fieldbus, 3-point linearity protocol
S	4-wire, 90-253 VAC, 4-20mA HART, 3-point linearity protocol
T	4-wire, 10.5-32 VDC, 4-20mA HART, 3-point linearity protocol
Y	Special version

040	Display / on-site operation
1	Without LC display
2	With LC display VU331 incl. on-site operation
3	Prepared for remote display FHX 40
9	Special version

050	Housing
A	Aluminium F12 housing coated to IP68 NEMA6P
C	Aluminium T12 housing coated to IP68 NEMA6P; with separate terminal compartment
D	Aluminium T12 housing coated to IP68 NEMA6P+OVP; with separate terminal compartment; with overvoltage protection
9	Special version

050						**Housing**			

060						**Screw union/entry**			
						2	M20x1.5 screw union		
						3	G 1/2“ entry		
						4	NPT 1/2“ entry		
						5	M12 PROFIBUS-PA plug-in connector		
						6	7/8" FF plug		
						9	Special version		
995							Marking		
							1	Tagging (TAG)	
							2	Bus address	
FMU40 -									Product designation

Product structure FMU41

010	Certificates
A	Variant for non-hazardous area
E	NEPSI Ex nA IIC T6 Gc
G	ATEX II 3G Ex nA IIC T6 Gc
I	NEPSI Ex ia IIC T6
J	NEPSI Ex d(ia) IIC T6
K	INMETRO Ex ia IIC T6 Ga/Gb
L	INMETRO Ex d [ia] IIC T6 Ga/Gb
N	CSA General Purpose
Q	NEPSI DIP
S	FM IS Cl. I,II,III Div. 1 Gr. A-G / NI Cl.I Div.2, zone 0,1,2
T	FM XP Cl. I,II,III Div. 1 Gr. A-G / zone 1,2
U	CSA IS Cl. I,II,III Div. 1 Gr. A-G / NI Cl. I Div. 2, zone 0,1,2
V	CSA XP Cl. I,II,III Div. 1 Gr. A-G / zone 1,2
1	ATEX II 1/2 G Ex ia IIC T6 Ga/Gb
2	ATEX II 1/2D, Alu blind cover
4	ATEX II 1/2 G Ex d [ia] IIC T6 Ga/Gb
5	ATEX II 1/3D
6	ATEX II 3D Ex ta IIIC T* °C Dc
Y	Special certificate

020	Process connection
R	G 2“ threadISO 228
N	NPT 2“ - 11,5 thread
Y	Special version

030	Power supply/communication
B	2 wire, 4...20mA-loop/HART
H	4 wire, 10.5...32VDC / 4-20mA HART
G	4 wire, 90...253VAC / 4-20mA HART
D	2 wire, PROFIBUS PA
F	2 wire, FOUNDATION Fieldbus
J	2-wire, 4-20mA HART, 5-point linearity protocol
K	2-wire, PROFIBUS PA, 5-point linearity protocol
L	2-wire, FOUNDATION Fieldbus, 5-point linearity protocol
M	4-wire, 90-253VAC; 4-20mA HART, 5-point linearity protocol
N	4-wire, 10.5-32VDC;4-20mA HART, 5-point linearity protocol
P	2-wire, 4-20mA HART, 3-point linearity protocol
Q	2-wire, PROFIBUS PA, 3-point linearity protocol
R	2-wire, FOUNDATION Fieldbus, 3-point linearity protocol
S	4-wire, 90-253 VAC, 4-20mA HART, 3-point linearity protocol
T	4-wire, 10.5-32 VDC, 4-20mA HART, 3-point linearity protocol
Y	Special version

040	Display / on-site operation
1	Without LC display
2	With LC display VU331 incl. on-site operation
3	Prepared for remote display FHX40
9	Special version

050	Housing
A	Aluminium F12 housing coated to IP68 NEMA 6P
C	Aluminium T12 housing coated to IP68 NEMA 6P; with separate terminal compartment
D	Aluminium T12 housing coated to IP68 NEMA 6P; with separate terminal compartment; with overvoltage protection
9	Special version

060	Screw union/entry
2	M20x1.5 screw union
3	G 1/2“ entry
4	NPT 1/2“ entry
5	M12 PROFIBUS-PA plug-in connector
6	7/8" FF plug
9	Special version

995							Marking	
							1	Tagging (TAG)
							2	Bus address
FMU41 -								Product designation

Product structure FMU42

010	Certificates
A	Variant for non-hazardous area
E	NEPSI Ex nA IIC T6 Gc
G	ATEX II 3G Ex nA IIC T6 Gc
I	NEPSI Ex ia IIC T6
J	NEPSI Ex d (ia) IIC T6
K	INMETRO Ex ia IIC T6 Ga/Gb
L	INMETRO Ex d [ia] IIC T6 Ga/Gb
N	CSA General Purpose
Q	NEPSI DIP
S	FM IS Cl. I,II,III Div. 1 Gr. A-G / NI Cl. I Div. 2
T	FM XP Cl. I,II,III Div. 1 Gr. A-G
U	CSA IS Cl. I,II,III Div. 1 Gr. A-G / NI Cl. I Div. 2
V	CSA XP Cl. I,II,III Div. 1 Gr. A-G
1	ATEX II 1/2 G Ex ia IIC T6 Ga/Gb
2	ATEX II 1/2 D, Alu blind cover
4	ATEX II 1/2 G Ex d [ia] IIC T6 Ga/Gb
5	ATEX II 1/3D
6	ATEX II 3D Ex ta IIIC T* °C Dc
Y	Special certificate

020	Process connection
M	Mounting bracket FAU20
P	UNI flange 3"/DN80/80, PP, max. 2.5bar abs./ 36psia suitable for 3" 150lbs / DN80 PN16 / 10K 80
Q	UNI flange 3"/DN80/80, PVDF, max. 2.5bar abs./ 36psia suitable for 3" 150lbs / DN80 PN16 / 10K 80
S	UNI flange 3"/DN80/80, 316L, max. 2.5bar abs./ 36psia suitable for 3" 150lbs / DN80 PN16 / 10K 80
T	UNI flange 4"/DN100/100, PP, max. 2.5bar abs./ 36psia suitable for 4" 150lbs / DN100 PN16 / 10K100
U	UNI flange 4"/DN100/100, PVDF, max. 2.5bar abs./ 36psia suitable for 4" 150lbs / DN100 PN16 / 10K100
V	UNI flange 4"/DN100/100, 316L, max. 2.5bar abs./ 36psia suitable for 4" 150lbs / DN100 PN16 / 10K100
Y	Special version

030	Power supply/communication
B	2 wire, 4...20mA-loop/HART
H	4 wire, 10.5...32VDC / 4-20mA HART
G	4 wire, 90...253VAC / 4-20mA HART
D	2 wire, PROFIBUS PA
F	2 wire, FOUNDATION Fieldbus
J	2-wire, 4-20mA HART, 5-point linearity protocol
K	2-wire, PROFIBUS PA, 5-point linearity protocol
L	2-wire, FOUNDATION Fieldbus, 5-point linearity protocol
M	4-wire, 90-253VAC; 4-20mA HART, 5-point linearity protocol
N	4-wire, 10.5-32VDC;4-20mA HART, 5-point linearity protocol
P	2-wire, 4-20mA HART, 3-point linearity protocol
Q	2-wire, PROFIBUS PA, 3-point linearity protocol
R	2-wire, FOUNDATION Fieldbus, 3-point linearity protocol
S	4-wire, 90-253 VAC, 4-20mA HART, 3-point linearity protocol
T	4-wire, 10.5-32 VDC, 4-20mA HART, 3-point linearity protocol
Y	Special version

040	Display / on-site operation
1	Without LC display
2	With LC display VU331 incl. on-site operation
3	Prepared for remote display FHX40
9	Special version

050						**Housing**					
					A	Aluminium F12 housing coated to IP68 NEMA 6P					
					C	Aluminium T12 housing coated to IP68 NEMA 6P, with separate terminal compartment					
					D	Aluminium T 12 housing coated to IP68 NEMA 6P, with separate terminal compartment; with overvoltage protection					
					Y	Special version					
060							**Gland/Entry**				
						2	M20x1.5 gland				
						3	G 1/2“ entry				
						4	NPT 1/2“ entry				
						5	M12 PROFIBUS-PA plug				
						6	7/8" FF plug				
						9	Special version				
070								**Sealing Sensor/Flange**			
							2	VITON flat sealing			
							3	EPDM flat sealing			
							9	special version			
080									**Additional options**		
								A	Additional options not selected		
995										Marking	
									1	Tagging (TAG)	
									2	Bus address	
FMU42 -											Product designation

Product structure FMU43

010	Certificates
A	Variant for non-hazardous area
2	ATEX II 1/2D, Alu blind cover
5	ATEX II 1/3D
6	ATEX II 3D Ex ta IIIC T* °C Dc
M	FM DIP Cl.II Div.1 Gr.E-G, NI Cl.I Div.2, Zone 2
N	CSA General Purpose
P	CSA DIP Cl.II Div.1 Gr.E-G, NI Cl.I Div.2, zone 2
Q	NEPSI DIP
Y	Special version

020	Process connection/material
P	Flange DN 100/ANSI 4"/JIS 16K100, PP (universal slip-on flange included)
S	Flange DN 100/ANSI 4"/JIS 16K100, SS 316TI (universal slip-on flange included)
K	Without slip-on flange/without mounting bracket (customer mounting equipment)
M	With mounting bracket FAU20
Y	Special version

030	Power supply/communication
H	4 wire, 10,5...32 VDC / 4-20mA HART
G	4 wire, 90...253 VAC / 4-20mA HART
D	2 wire, PROFIBUS PA
F	2 wire, FOUNDATION Fieldbus
K	2-wire, PROFIBUS PA, 5-point linearity protocol
L	2-wire, FOUNDATION Fieldbus, 5-point linearity protocol
M	4-wire, 90-253VAC; 4-20mA HART, 5-point linearity protocol
N	4-wire, 10.5-32VDC;4-20mA HART, 5-point linearity protocol
Q	2-wire, PROFIBUS PA, 3-point linearity protocol
R	2-wire, FOUNDATION Fieldbus, 3-point linearity protocol
S	4-wire, 90-253 VAC, 4-20mA HART, 3-point linearity protocol
T	4-wire, 10.5-32 VDC, 4-20mA HART, 3-point linearity protocol
Y	Special version

040	Display / on-site operation
1	Without LC display
2	4-line display VU331, Envelope curve display on site
3	Prepared for remote display FHX 40
9	Special version

050	Housing
A	Aluminium F12 housing coated to IP68 NEMA 6P
9	Special version

060	Screw union/entry
2	M20x1.5 screw union
3	G 1/2“ entry
4	NPT 1/2“ entry
5	M12 PROFIBUS-PA plug-in connector
6	7/8" FF plug
9	Special version

995	Marking
1	Tagging (TAG)
2	Bus address

FMU43 -	Product designation

Product structure FMU44

010	Approval
A	Non-hazardous area
1	ATEX II 1/2G Ex ia IIC T6 Ga/Gb
4	ATEX II 1/2G Ex d (ia) IIC T6 Ga/Gb
G	ATEX II 3G Ex nA IIC T6 Gc
2	ATEX II 1/2 D, Alu blind cover
5	ATEX II 1/3 D
6	ATEX II 3D Ex ta IIIC T* °C Dc
S	FM IS Cl.I,II,III Div.1 Gr.A-G, NI Cl.I Div.2, Zone 0,1,2
T	FM XP Cl.I,II,III Div.1 Gr.A-G, Zone 1,2
N	CSA General Purpose
U	CSA IS Cl.I,II,III Div.1 Gr.A-G, NI Cl.I Div.2, zone 0,1,2
V	CSA XP Cl.I,II,III Div.1 Gr.A-G
K	INMETRO Ex ia IIC T6 Ga/Gb
L	INMETRO Ex d [ia] IIC T6 Ga/Gb
I	NEPSI Ex ia IIC T6
J	NEPSI Ex d(ia) IIC T6
E	NEPSI Ex nA IIC T6 Gc
Q	NEPSI DIP
Y	Special version, to be specified

020	Process connection
A	8" 150lbs FF, 316L, max 2.5bar abs./36psia
E	UNI flange 6"/DN150/150, PP, max 2.5bar abs./ 36psia, suitable for 6" 150lbs / DN150 PN16 / 10K 150
F	UNI flange 6"/DN150/150, PVDF, max 2.5bar abs./36psia, suitable for 6" 150lbs /DN150 PN16 / 10K 150
G	UNI flange 6"/DN150/150, 316L, max 2.5bar abs. 36psia, suitable for 6" 150lbs / DN150 PN16 / 10K 150
H	UNI flange DN200/200, PP, max 2.5bar abs./ 36 psia, suitable for DN200 PN16 / 10K 200
J	UNI flange DN200/200, PVDF, max 2.5bar abs./ 36psia, suitable for DN200 PN16 / 10K 200
K	UNI flange DN200/200, 316L, max 2.5bar abs./ 36psia, suitable for DN200 PN16 / 10K 200
L	8" 150lbs FF, PP, max 2.5bar abs./ 36psia
M	Mounting bracket FAU20
N	8" 150lbs FF, PVDF, max 2.5bar abs./ 36psia
T	UNI flange 4"/DN100/100, PP, max 2.5bar abs./ 36psia, suitable for 4" 150lbs / DN100 PN16 / 10K 100
U	UNI flange 4"/DN100/100, PVDF, max. 2.5bar abs./ 36 psia, suitable for 4" 150lbs / DN100 PN16 / 10K 100
V	UNI flange 4"/DN100/100, 316L, max 2.5bar abs./ 36psia, suitable for 4" 150lbs / DN100 PN16 / 10K 100
Y	Special version, to be specified

030	Power supply; Output
B	2-wire, 4-20mA HART
D	2-wire, PROFIBUS PA
F	2-wire, FOUNDATION Fieldbus
G	4-wire, 90-253 VAC, 4-20mA HART
H	4-wire, 10.5-32 VDC, 4-20mA HART
J	2-wire, 4-20mA HART, 5-point linearity protocol
K	2-wire, PROFIBUS PA, 5-point linearity protocol
L	2-wire, FOUNDATION Fieldbus, 5-point linearity protocol
M	4-wire, 90-253 VAC; 4-20mA HART, 5-point linearity protocol
N	4-wire, 10.5-32 VDC;4-20mA HART, 5-point linearity protocol
P	2-wire, 4-20mA HART, 3-point linearity protocol
Q	2-wire, PROFIBUS PA, 3-point linearity protocol
R	2-wire, FOUNDATION Fieldbus, 3-point linearity protocol
S	4-wire, 90-253 VAC, 4-20mA HART, 3-point linearity protocol
T	4-wire, 10.5-32 VDC, 4-20mA HART, 3-point linearity protocol
Y	Special version, to be specified

040	Operation
1	w/o display, via communication
2	4-line display VU331, Envelope curve display on site
3	Prepared for FHX40, Remote display (accessory)
9	Special version, to be specified

050	Housing
A	F12 Alu, coated IP68 NEMA6P
C	T12 Alu, coated IP68 NEMA6P, Separate conn. compartment
D	T12 Alu, coated IP68 NEMA6P + OVP, Sep. conn. compartment, OVP = overvoltage protection
9	Special version, to be specified

060	Cable entry
2	Gland M20 (Ex d > thread M20)
3	Thread G1/2
4	Thread NPT 1/2
5	Plug M12
6	Plug 7/8“
9	Special version, to be specified

070	Process Sealing Sensor/ Flange
2	Viton
3	EPDM
9	Special version, to be specified

080	Additional option
A	Basic version
Y	Special version, to be specified

995	Marking
1	Tagging (TAG)
2	Bus address

FMU44 -	complete product designation

3-point linearity protocol

If the "3-point linearity protocol" option has been selected, the three measuring points of the linearity protocol are defined depending of the selected sensor:

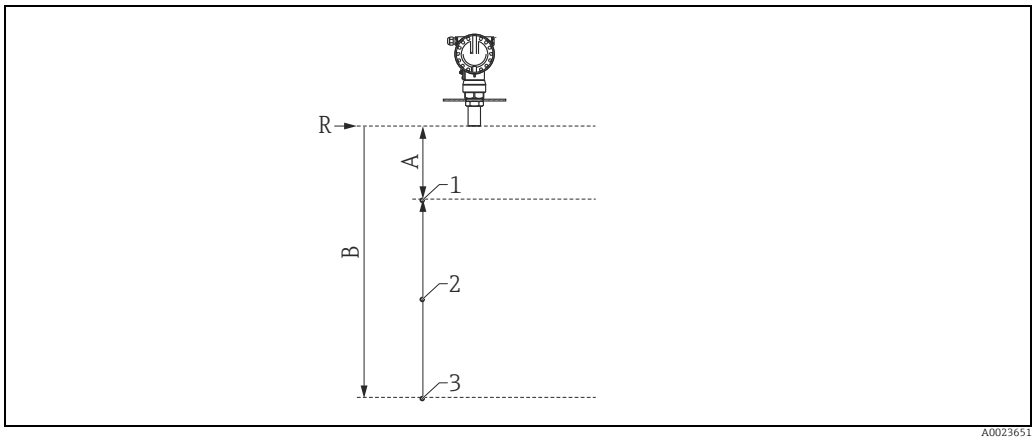

A0023651

Points of the 3-point linearity protocol

A Distance from reference point R to first measuring point
B Distance from reference point R to third measuring point
R Reference point of the measurement
1 First measuring point
2 Second measuring point (centered between first and third measuring point)
3 Third measuring point

Measuring device	A	B
FMU40	1000 (39)	5000 (197)
FMU41 FMU42 FMU43 FMU44	1000 (39)	6000 (236)

Dimensions mm (in)

Note!
The position of the measuring points may vary by ±1 cm (±0,04 in).

Note!
The linearity is checked under reference conditions.

5-point linearity protocol

The following must be taken into account if option "5 point linearity protocol" has been selected:

- The five points of the linearity protocol are evenly distributed across the measuring range (0 % to 100 %). In order to define the measuring range, Empty calibration (E) and Full calibration (F) have to be specified.[3)]
- The following restrictions have to be taken into account when defining E and F:

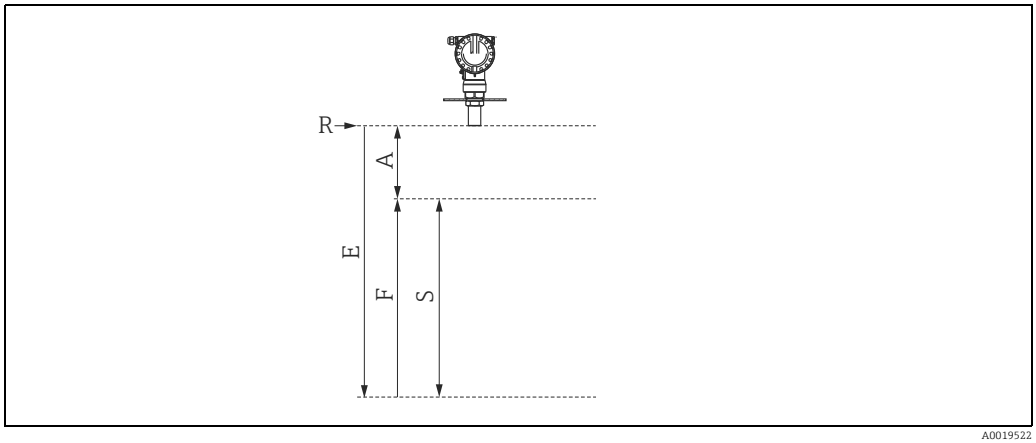

A0019522

Pos.	Measuring range	FMU40	FMU41	FMU42	FMU43	FMU44
E	Maximum value for the empty calibration	5000 (197)	8000 (315)	10000 (394)	15000 (591)	20000 (787)
F	Maximum value for the full calibration	4750 (187)	7500 (295)	9600 (378)	14400 (567)	19500 (768)
S	Minimum span E-A	100 (3.94)	100 (3.94)	100 (3.94)	150 (591)	250 (9.84)
A	Minimum distance between reference point R from sensor and 100 % level	250 (9.84)	500 (19.7)	400 (15.7)	600 (23.6)	500 (19.7)

Dimensions mm (in)

Note!
The linearity is checked under reference conditions.

Scope of delivery

- Instrument according to the version ordered
- Endress+Hauser operating program on the enclosed CD-ROM
- Brief operating instructions according to the communication version
- For certified instrument versions: Safety Instructions, Control- or Installation drawings
- For FMU40 *R**** and FMU41 *R****: counter nut (PC)
- For FMU40/41: sealing ring (EPDM)
- For gland M20x1.5:
  - 1 cable gland for 2-wire instruments
  - 2 cable glands for 4-wire instruments

  The cable glands are mounted on delivery.

3) If the values for the full calibration and empty calibration are missing or outside the specified area, the devices are tested with the maximum value according to the table.

Accessories

Weather protection cover

A Weather protection cover made of stainless steel is recommended for outdoor mounting. The shipment includes the protective cover and tension clamp.

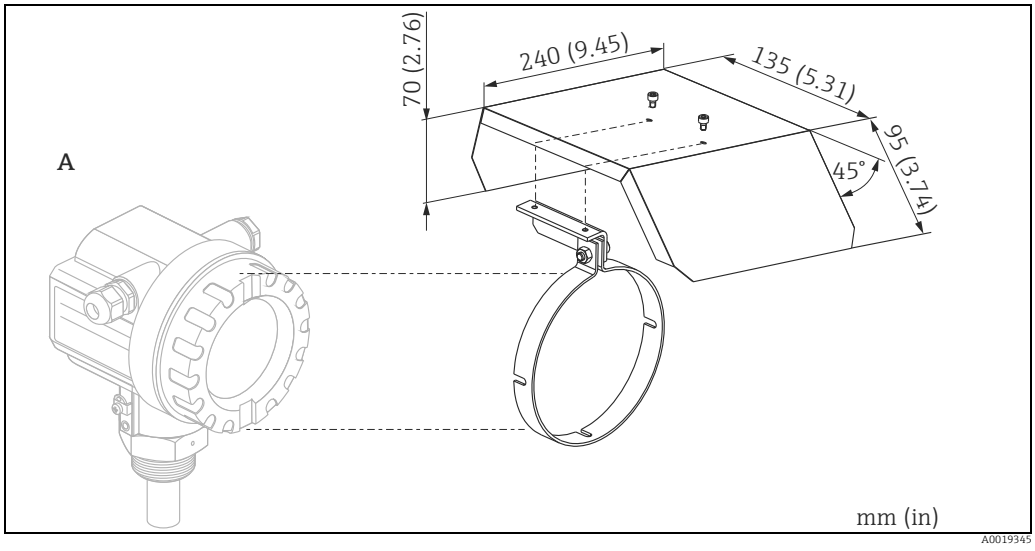

A *F12 housing, T12 housing*

Part	Order No.	Material
Protective cover, tension clamp	543199-0001	304 (1.4301)
Screw, nut, disk		A2

Installation bracket for FMU40, FMU41

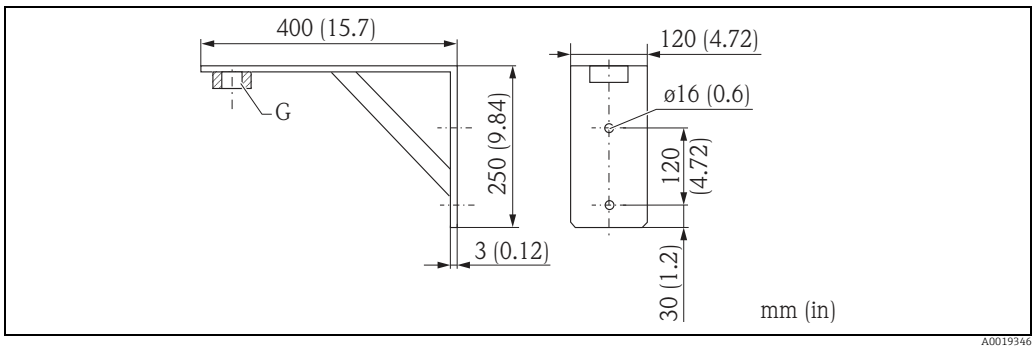

Sensor	Order No.	Material	Weight
FMU40, G 1½"	942669-0000	316 Ti (1.4571)	3.4 kg (7.5 lbs)
FMU41, G 2"	942669-0001		

Suited for NPT 1½" and 2" as well

Screw in flange

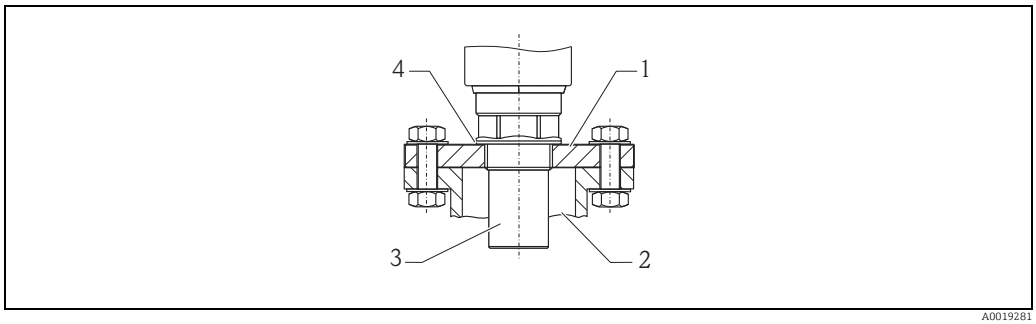

A0019281

1 Screw in flange
2 Nozzle
3 Sensor
4 Sealing ring EPDM (supplied)

Screw in flange FAX50

015	**Material**:	
	BR1	DN50 PN10/16 A, steel flange EN1092-1
	BS1	DN80 PN10/16 A, steel flange EN1092-1
	BT1	DN100 PN10/16 A, steel flange EN1092-1
	JF1	2" 150lbs FF, steel flange ANSI B16.5
	JG1	3" 150lbs FF, steel flange ANSI B16.5
	JH1	4" 150lbs FF, steel flange ANSI B16.5
	JK2	8" 150lbs FF, PP max 3bar abs/44psia flange ANSI B16.5
	XIF	UNI flange 2"/DN50/50, PVDF max 4bar abs/58psia, suitable for 2" 150lbs/DN50 PN16/10K 50
	XIG	UNI flange 2"/DN50/50, PP max 4bar abs/58psia, suitable for 2" 150lbs/DN50 PN16/10K 50
	XIJ	UNI flange 2"/DN50/50, 316L max 4bar abs/58psia, suitable for 2" 150lbs/DN50 PN16/10K 50
	XJF	UNI flange 3"/DN80/80, PVDF max 4bar abs/58psia, suitable for 3" 150lbs/DN80 PN16/10K 80
	XJG	UNI flange 3"/DN80/80, PP max 4bar abs/58psia, suitable for 3" 150lbs/DN80 PN16/10K 80
	XJJ	UNI flange 3"/DN80/80, 316L max 4bar abs/58psia, suitable for 3" 150lbs/DN80 PN16/10K 80
	XKF	UNI flange 4"/DN100/100, PVDF max 4bar abs/58psia, suitable for 4" 150lbs/DN100 PN16/10K 100
	XKG	UNI flange 4"/DN100/100, PP max 4bar abs/58psia, suitable for 4" 150lbs/DN100 PN16/10K 100
	XKJ	UNI flange 4"/DN100/100, 316L max 4bar abs/58psia, suitable for 4" 150lbs/DN100 PN16/10K 100
	XLF	UNI flange 6"/DN150/150, PVDF max 4bar abs/58psia, suitable for 6" 150lbs/DN150 PN16/10K 150
	XLG	UNI flange 6"/DN150/150, PP max 4bar abs/58psia, suitable for 6" 150lbs/DN150 PN16/10K 150
	XLJ	UNI flange 6"/DN150/150, 316L max 4bar abs/58psia, suitable for 6" 150lbs/DN150 PN16/10K 150
	XMG	UNI flange DN200/200, PP max 4bar abs/58psia, suitable for DN200 PN16/10K 200
	XNG	UNI flange DN250/250, PP max 4bar abs/58psia, suitable for DN250 PN16/10K 250
	YYY	Special version

020	**Sensor Connection**:	
	A	Thread ISO228 G3/4
	B	Thread ISO228 G1
	C	Thread ISO228 G1-1/2
	D	Thread ISO228 G2
	E	Thread ANSI NPT3/4
	F	Thread ANSI NPT1
	G	Thread ANSI NPT1-1/2
	H	Thread ANSI NPT2
	Y	Special version

	015	020
FAX50 -		

Cantilever with mounting frame or wall bracket

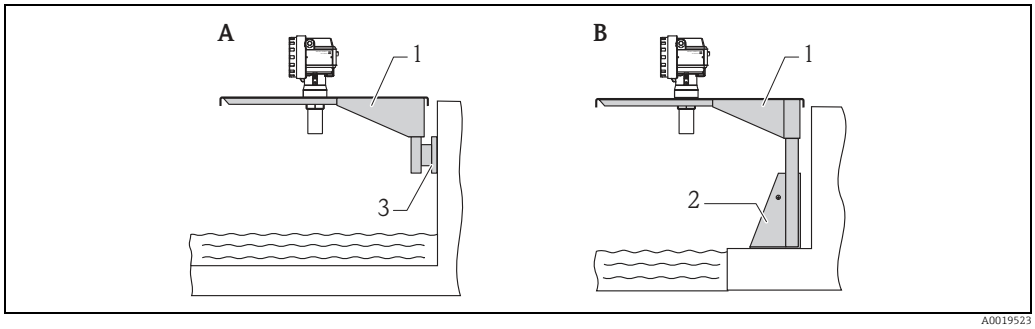

A *Installation with cantilever and wall bracket*
B *Installation with cantilever and mounting frame*
1 *Cantilever*
2 *Mounting frame*
3 *Wall bracket*

Cantilever

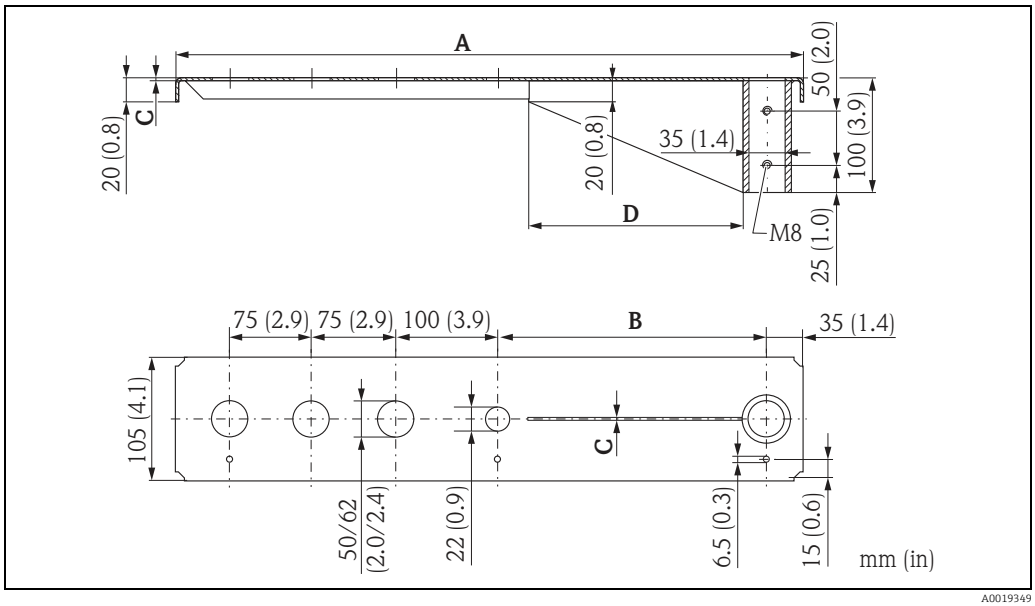

A	B	C	D	Weight	for Sensor	Material	Order Code
585 (23)	250 (9.84)	2 (0.08)	200 (7.87)	1.9 kg (4.2 lbs)	FMU40	316Ti (1.4571)	52014132
						galv. steel	52014131
					FMU41	316Ti (1.4571)	52014136
						galv. steel	52014135
1085 (42.7)	750 (29.5)	3 (0.12)	300 (11.8)	4.4 kg (9.7 lbs)	FMU40	316Ti (1.4571)	52014134
						galv. steel	52014133
					FMU41	316Ti (1.4571)	52014138
						galv. steel	52014137

mm (in)

- The 50 mm (1.97 in) or 62 mm (2.44 in) orifices serve for the mounting of the FMU40 or FMU41 sensor, respectively.
- The 22 mm (0.87 in) orifice may be used for an additional sensor.

Fixing screws are supplied.

Mounting Frame

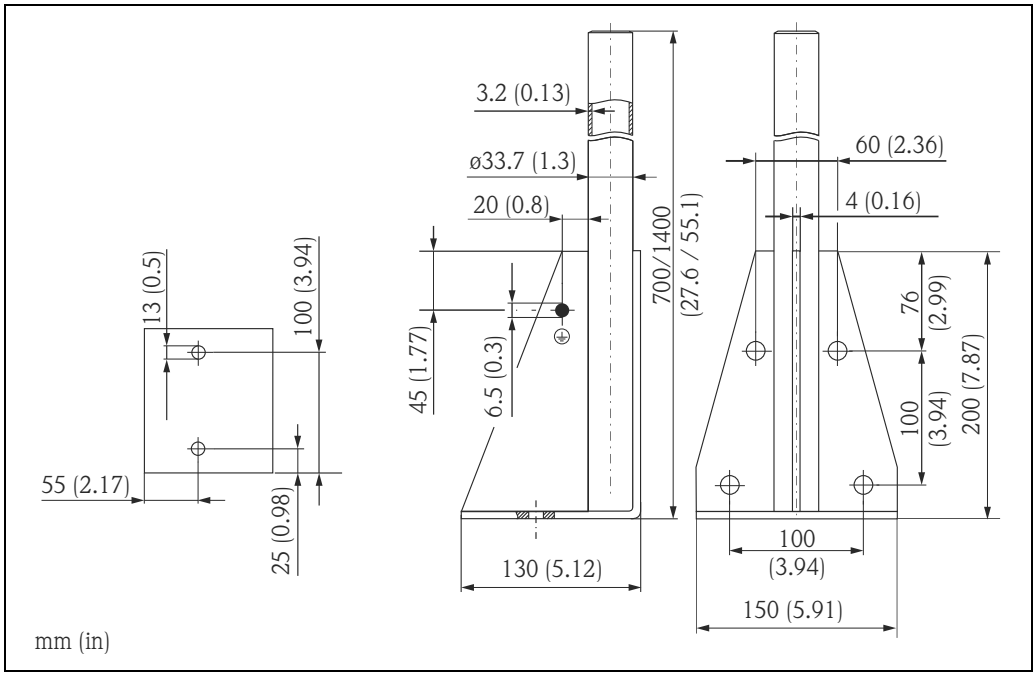

Height	Material	Weight	Order Code
700 (27.6)	galv. steel	3.2 kg (7.06 lbs)	919791-0000
700 (27.6)	316Ti (1.4571)		919791-0001
1400 (55.1)	galv. steel	4.9 kg (10,08 lbs)	919791-0002
1400 (55.1)	316Ti (1.4571)		919791-0003

mm (in)

Wall Bracket

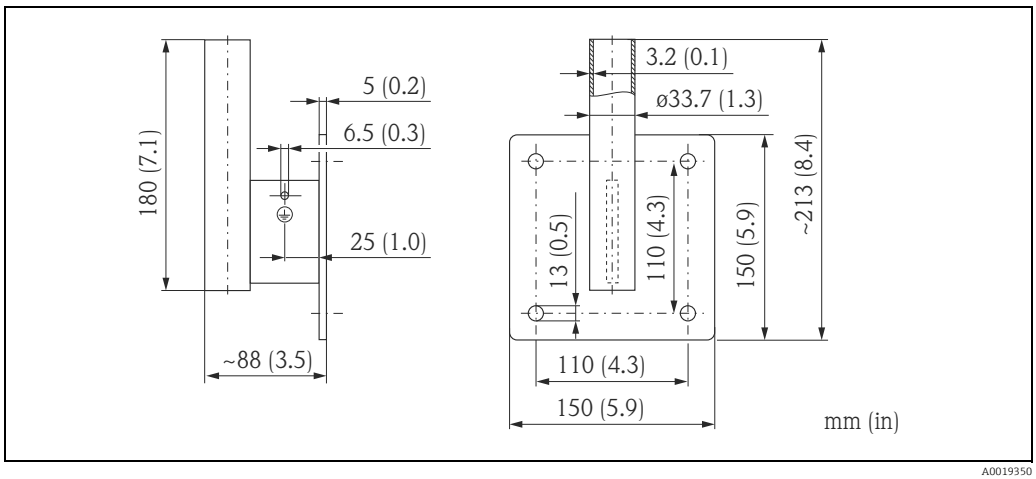

Material	Weight	Order Code
galv. steel	1.4 kg (3.09 lbs)	919792-0000
316Ti (1.4571)		919792-0001

Commubox FXA195 HART

For intrinsically safe communication with FieldCare via the USB interface.
For details refer to TI00404F/00/EN.

Commubox FXA291

The Commubox FXA291 connects Endress+Hauser field instruments via the service interface to the USB interface of a personal computer or a notebook. For details refer to TI00405C/07/EN.

Note!
For the instrument you need the "ToF Adapter FXA291" as an additional accessory.

ToF Adapter FXA291

The ToF Adapter FXA291 connects the Commubox FXA291 via the USB interface of a personal computer or a notebook to the instrument. For details refer to KA00271F/00/A2.

Remote display FHX40

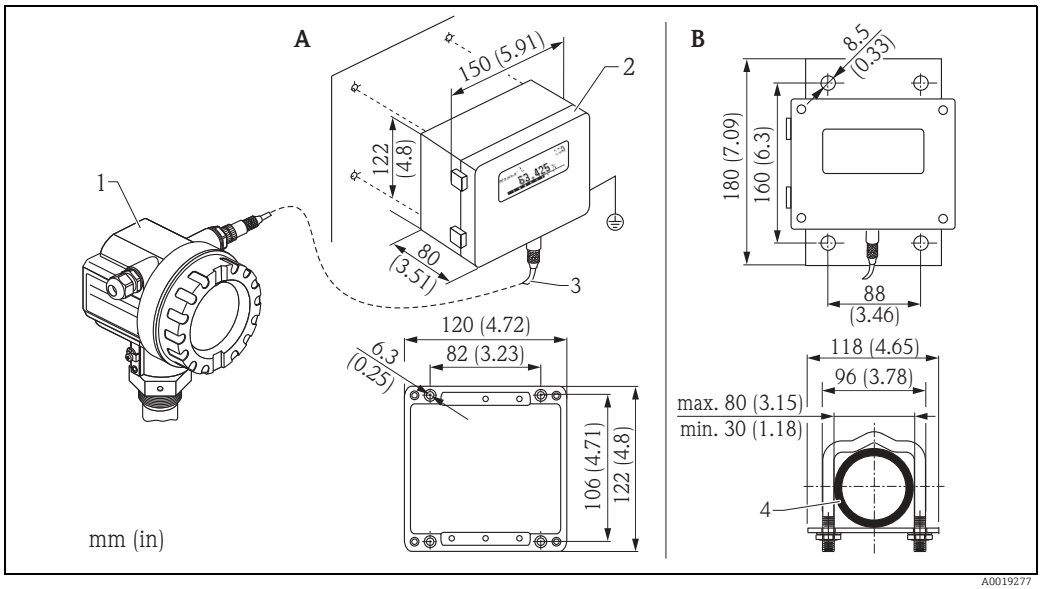

A *Wall mounting (without mounting bracket)*
B *Pipe mounting (mounting bracket and plate supplied optionally, see product structure)*
1 *Prosonic M, Levelflex M, Micropilot M*
2 *Separate housing FHX40 (IP65)*
3 *Cable*
4 *Pipe*

For the device families Micropilot FMR2xx, Levelflex FMP4x and Prosonic FMU4x, the remote display FHX40 must be only used for the HART communication version. For more details, see KA00202F/00/C4. Weitere Details, siehe KA00202F/00/C4.
For Fieldbus Foundation and Profibus PA devices the usage of RID14, RID16 is recommended. Further details are attached below → 50.

Order information FHX40

010	**Approval:**		
	A	Non-hazardous area	
	2	ATEX II 2G Ex ia IIC T6	
	3	ATEX II 2D Ex ia IIIC T80°C	
	G	IECEx Zone1 Ex ia IIC T6/T5	
	S	FM IS Cl. I Div.1 Gr. A-D, zone 0	
	U	CSA IS Cl. I Div.1 Gr. A-D, zone 0	
	N	CSA General Purpose	
	K	TIIS Ex ia IIC T6	
	C	NEPSI Ex ia IIC T6/T5	
	Y	Special version, TSP-Nr. to be spec.	
020		**Cable:**	
		1	20 m/65 ft: for HART
		5	20 m/65 ft: for PROFIBUS PA, FOUNDATION Fieldbus
		9	Special version, TSP-Nr. to be spec.
030			**Additional option:**
			A Basic version
			B Mounting bracket, pipe 1"/ 2"

030				**Additional option:**	
			Y	Special version, TSP-Nr. to be spec.	
995				**Marking:**	
			1	Tagging (TAG)	
FHX40 -				Complete product designation	

For connection of the remote display FHX40 use the cable which fits the communication version of the respective instrument.

Technical data (cable and housing):

Max. cable length	20 m (65 ft)
Temperature range	–40 to +60 °C (–40 to +140 °F) for temperature class T6 –40 to +75 °C (–40 to +167 °F) for temperature class T5
Degree of protection	IP65/67 (housing); IP68 (cable) acc. to IEC 60529
Dimensions mm (in), (HxWxD)	122x150x80 (4.8x5.9x3.2)

Materials

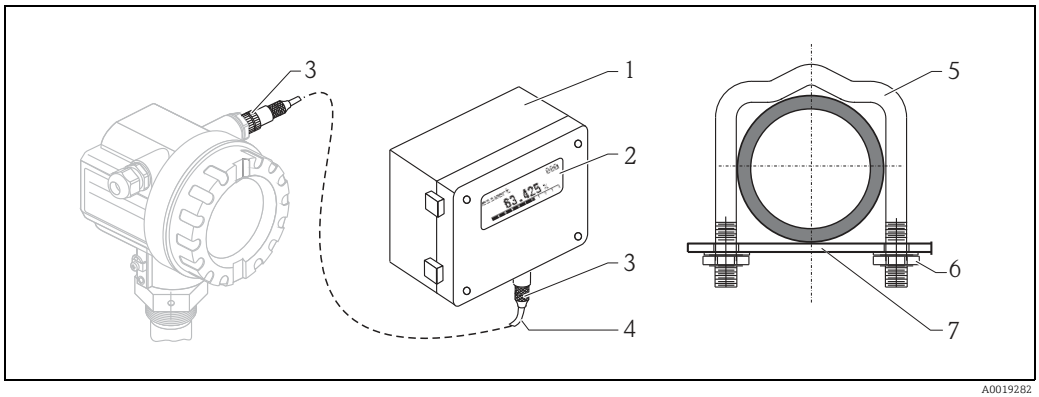

A0019282

Position	Part	Material
1	Housing/Cover	AlSi12, Screw: V2A
	Ground terminal	CuZn nickel-plated, Screw: V2A
2	Display	Glass
3	Cable gland	CuZn nickel-plated
4	Cable	PVC
5	Mounting bracket	316 Ti (1.4571) or 316 L (1.4435) or 316 (1.4401)
6	Nut	V4A
7	Plate Screw set (M5)	316 Ti (1.4571) Spring washer: 301 (1.4310) or V2A Screw: V4A, Nut: V4A

PROFIBUS PA/FOUNDATION Fieldbus Indicator RID14

Display for the indication of up to 8 PROFIBUS PA Protokoll or FOUNDATION Fieldbus values.
Die-cast aluminium housing for general applications or optional stainless steel housing.
Optional with Ex d approval.

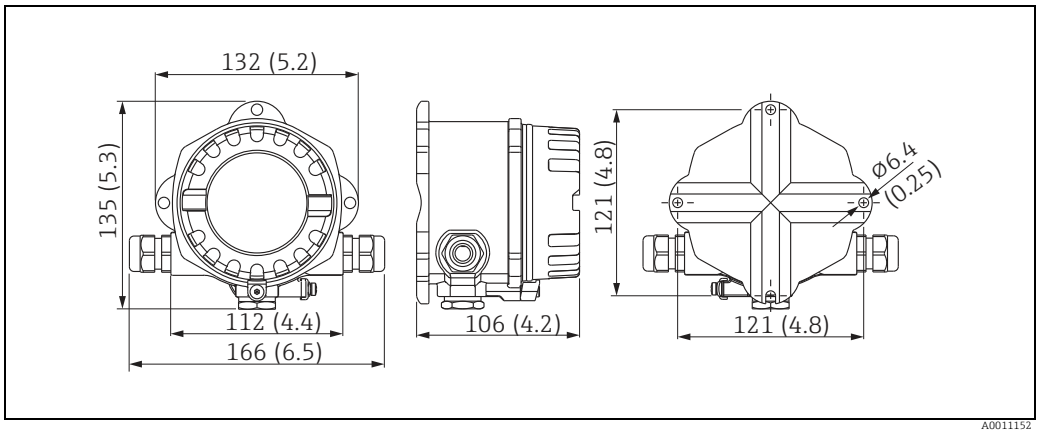

Dimensions of the field indicator; dimensions mm (in)

Display elements

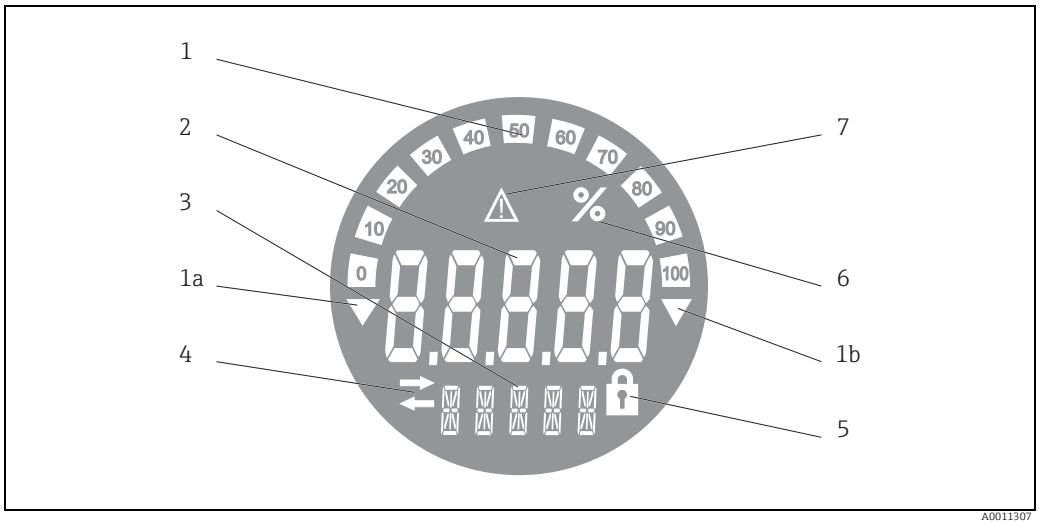

LC-display of the field indicator (backlit, pluggable in 90° stages)

1 *bar graph display in increments of 10% with indicators for underranging (item 1a) and overranging (item 1b)*
2 *measured value display, digit height 20.5 mm (0.8 in), status indication "Bad measured value status"*
3 *14-segment display for units and messages*
4 *Communication 'symbol'*
5 *'Parameters cannot be modified' symbol*
6 *'%' unit*
7 *'Uncertain measured value status' symbol*

For more details see TI00145R/09/DE.

PROFIBUS PA/FOUNDATION Fieldbus Indicator RID16

Display for the indication of up to 8 PROFIBUS PA or FOUNDATION Fieldbus values. Glass fiber reinforced plastic or optional die-cast aluminium housing.

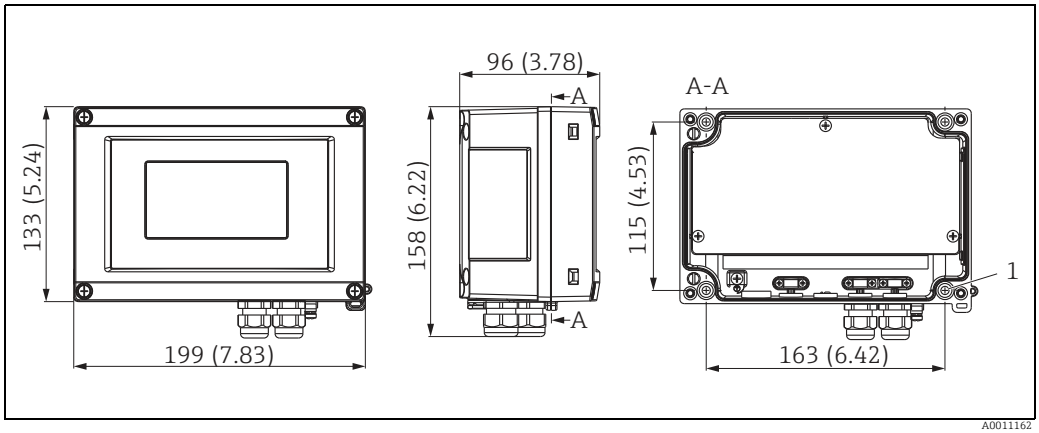

Dimensions of the field indicator; dimensions mm (in)

1 Bore for mounting directly on the wall or on optional mounting plate with 4 screws ø5 mm (0.2 in)

Display elements

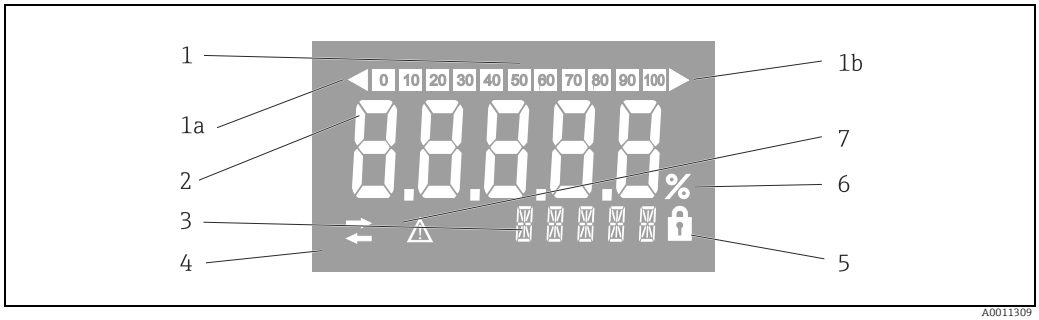

LC display of the field indicator

1 bar graph display in increments of 10% with indicators for underranging (item 1a) and overranging (item 1b)
2 measured value display, digit height 26 mm (1.02 in), status indication "Bad measured value status"
3 14-segment display for units and messages
4 'Communication' symbol
5 'Parameters cannot be modified' symbol
6 '%' unit
7 'Uncertain measured value status' symbol

For more details see TI00146R/09/DE.

Documentation

This documentation can be found on our product pages on → www.en.endress.com → download

Operating manual

- **BA00237F** (4 to 20 mA, HART)
- **BA00238F** (PROFIBUS PA)
- **BA00239F** (FOUNDATION Fieldbus)

These instructions describe the installation and first commissioning of the Prosonic M. From the operating menu, all functions are included, which are required for standard measurement tasks. Additional functions are **not** contained in the manual.

Description of device functions

BA00240F

This contains a detailed description of **all** the functions of the Prosonic M and is valid for all communication variants.

Short instructions

The following short instruction are supplied according to the communication version:

- **KA01062F** (4 to 20 mA, HART)
- **KA01063F** (PROFIBUS PA)
- **KA01064F** (FOUNDATION Fieldbus)

These instructions describe the installation and first quick commissioning of the Prosonic M.

KA00183F

Can be found under the device housing cover.
The most important menu functions are summarised on this sheet. It is intended primarily as a memory jogger for users who are familiar with the operating concept of Endress+Hauser time-of-flight instruments.

Safety Instructions ATEX

The following safety instructions are supplied with ATEX-certified device versions. If the devices are used in explosive areas, comply with all the specifications in these safety instructions.

Instrument version	Certificate	Communication	Housing	Safety Instructions
▪ FMU40 - ... ▪ FMU41 - ... ▪ FMU42 - ... ▪ FMU44 - ...	ATEX II 1/2 G Ex ia IIC T4...T6 II 2 G Ex ia IIC T4...T6	HART (2-wire)	F12	XA00174F
▪ FMU40 - ... ▪ FMU41 - ... ▪ FMU42 - ... ▪ FMU44 - ...	ATEX II 1/2 G Ex ia IIC T4...T6 II 2 G Ex ia IIC T4...T6	HART (2-wire)	T12 with overvoltage protection	XA00224F
▪ FMU40 - ... ▪ FMU41 - ... ▪ FMU42 - ... ▪ FMU44 - ...	ATEXII 1/2 G Ex ia IIC T4...T6 II 2 G Ex ia IIC T4...T6	▪ PROFIBUS PA ▪ FOUNDATION Fieldbus	F12	XA00175F
▪ FMU40 - ... ▪ FMU41 - ... ▪ FMU42 - ... ▪ FMU44 - ...	ATEX II 1/2 G Ex ia IIC T4...T6 II 2 G Ex ia IIC T4...T6	▪ PROFIBUS PA ▪ FOUNDATION Fieldbus	T12 with overvoltage protection	XA00225F
▪ FMU40 - ... ▪ FMU41 - ... ▪ FMU42 - ... ▪ FMU44 - ...	ATEX II 1/2 G Ex d[ia] IIC T4...T6 II 2 G Ex d[ia] IIC T4...T6	▪ HART (2-wire) ▪ PROFIBUS PA ▪ FOUNDATION Fieldbus	T12	XA00176F
▪ FMU40 - ... ▪ FMU41 - ... ▪ FMU42 - ... ▪ FMU43 - ... ▪ FMU44 - ...	▪ ATEX II 3D Ex ta IIC Txx °C Dc ▪ ATEX II 3G Ex nA IIC T6 Gc	▪ HART (2-wire) ▪ HART (4-wire, DC) ▪ HART (4-wire, AC) ▪ PROFIBUS PA ▪ FOUNDATION Fieldbus	▪ F12 ▪ T12 ▪ T12 with overvoltage protection	XA00179F
▪ FMU40 - ... ▪ FMU41 - ... ▪ FMU42 - ... ▪ FMU44 - ...	▪ ATEX II 1/2 D, II 2 D Ex tD ... IP6X T95°C ▪ ATEX II 1/3 D, II 3 D Ex tD ... IP6X T95°C	▪ HART (2-wire) ▪ PROFIBUS PA ▪ FOUNDATION Fieldbus	F12	XA00180F
▪ FMU40 - ... ▪ FMU41 - ... ▪ FMU42 - ... ▪ FMU44 - ...	▪ ATEX II 1/2 D, II 2 D Ex tD ... IP6X T115°C ▪ ATEX II 1/3 D, II 3 D Ex tD ... IP6X T100°C	▪ HART (4-wire, DC) ▪ HART (4-wire, AC)	F12	XA00259
▪ FMU43 - ...	▪ ATEX II 1/2 D bzw. II 2 D ▪ ATEX II 1/3 D bzw. II 3 D	▪ HART (4-wire, DC) ▪ HART (4-wire, AC)	F12	XA00177F
▪ FMU43 - ...	▪ ATEX II 1/2 D bzw. II 2 D ▪ ATEX II 1/3 D bzw. II 3 D	▪ PROFIBUS PA ▪ FOUNDATION Fieldbus	F12	XA00178F

Safety Instructions NEPSI

The following safety instructions are supplied with NEPSI-certified device versions. If the devices are used in explosive areas, comply with all the specifications in these safety instructions.

Instrument version	Certificate	Communication	Housing	Safety Instructions
▪ FMU40 - ... ▪ FMU41 - ... ▪ FMU42 - ...	Ex ia IIC T1 ... T6 NEPSI GYJ071468	HART (2-wire)	F12	XA00436F
▪ FMU40 - ... ▪ FMU41 - ... ▪ FMU42 - ...	Ex ia IIC T1 ... T6 NEPSI GYJ071468	HART (2-wire)	T12 with overvoltage protection	XA00442F
▪ FMU40 - ... ▪ FMU41 - ... ▪ FMU42 - ...	Ex ia IIC T1 ... T6 NEPSI GYK071468	▪ PROFIBUS PA ▪ FOUNDATION Fieldbus	F12	XA00437F
▪ FMU40 - ... ▪ FMU41 - ... ▪ FMU42 - ...	Ex ia IIC T1 ... T6 NEPSI GYJ071468	▪ PROFIBUS PA ▪ FOUNDATION Fieldbus	T12 with overvoltage protection	XA00443F
▪ FMU40 - ... ▪ FMU41 - ... ▪ FMU42 - ...	Ex d [ia] IIC T1 ... T6 NEPSI GYJ071468	▪ HART (2-wire) ▪ PROFIBUS PA ▪ FOUNDATION Fieldbus	T12	XA00438F
▪ FMU40 - ... ▪ FMU41 - ... ▪ FMU42 - ...	DIP A21/A22 T_A, T* NEPSI GYJ071468	▪ HART (2-wire) ▪ PROFIBUS PA ▪ FOUNDATION Fieldbus	F12	XA00441F
▪ FMU40 - ... ▪ FMU41 - ... ▪ FMU42 - ...	DIP A21/A22 T_A, T* NEPSI GYJ071468	▪ HART (4-wire, DC) ▪ HART (4-wire, AC)	F12	XA00444F
▪ FMU43 - ...	DIP A21/A22 T_A, T* NEPSI GYJ071469	▪ HART (4-wire, DC) ▪ HART (4-wire, AC)	F12	XA00439F
▪ FMU43 - ...	DIP A21/A22 T_A, T* NEPSI GYJ071469	▪ PROFIBUS PA ▪ FOUNDATION Fieldbus	F12	XA00440F
▪ FMU40 - ... ▪ FMU41 - ... ▪ FMU42 - ... ▪ FMU44 - ...	Ex nA IIC T6...T3 Gc NEPSI GYJ12.1452	▪ HART ▪ PROFIBUS PA ▪ FOUNDATION Fieldbus	▪ F12 ▪ T12 ▪ F23	XA00403F

Safety Instructions INMETRO

The following safety instructions are supplied with INMETRO-certified device versions. If the devices are used in explosive areas, comply with all the specifications in these safety instructions.

Instrument version	Certificate	Communication	Housing	Safety Instructions
▪ FMU40 - ... ▪ FMU41 - ... ▪ FMU42 - ... ▪ FMU44 - ...	Ex ia IIC T6 Ga/Gb Ex ia IIC T6 Gb TÜV 13.0899 X	▪ HART	▪ F12 ▪ T12	XA01275F
▪ FMU40 - ... ▪ FMU41 - ... ▪ FMU42 - ... ▪ FMU44 - ...	Ex ia IIC T6 Ga/Gb Ex ia IIC T6 Gb TÜV 13.0899 X	▪ PROFIBUS PA ▪ FOUNDATION Fieldbus	▪ F12 ▪ T12	XA01276F
▪ FMU40 - ... ▪ FMU41 - ... ▪ FMU42 - ... ▪ FMU44 - ...	Ex d [ia] IIC T6 Ga/Gb Ex d [ia] IIC T6 Gb TÜV 13.0899 X	▪ HART ▪ PROFIBUS PA ▪ FOUNDATION Fieldbus	▪ T12	XA01277F

Control drawings Installation drawings

The following control or installation drawings are supplied with the FM, CSA and TIIS-certified device versions:

Instrument version	Certificate	Communication	Housing	Control or Installation Drawing
▪ FMU40 - ... ▪ FMU41 - ... ▪ FMU42 - ...	FM IS	HART (2-wire)	F12	ZD00096F
▪ FMU40 - ... ▪ FMU41 - ... ▪ FMU42 - ...	FM IS	▪ PROFIBUS PA ▪ FOUNDATION Fieldbus	F12	ZD00097F
▪ FMU40 - ... ▪ FMU41 - ... ▪ FMU42 - ...	FM IS	HART (2-wire)	T12 with overvoltage protection	ZD00139F
▪ FMU40 - ... ▪ FMU41 - ... ▪ FMU42 - ...	FM IS	▪ PROFIBUS PA ▪ FOUNDATION Fieldbus	T12 with overvoltage protection	ZD00140F
▪ FMU40 - ... ▪ FMU41 - ... ▪ FMU42 - ...	FM XP	▪ HART (2-wire) ▪ PROFIBUS PA ▪ FOUNDATION Fieldbus	T12	ZD00098F
▪ FMU40 - ... ▪ FMU41 - ... ▪ FMU42 - ... ▪ FMU44 - ...	CSA IS	HART (2-wire)	F12	ZD00088F
▪ FMU40 - ... ▪ FMU41 - ... ▪ FMU42 - ... ▪ FMU44 - ...	CSA IS	▪ PROFIBUS PA ▪ FOUNDATION Fieldbus	F12	ZD00099F
▪ FMU40 - ... ▪ FMU41 - ... ▪ FMU42 - ... ▪ FMU44 - ...	CSA IS	HART (2-wire)	T12 with overvoltage protection	ZD00101F
▪ FMU40 - ... ▪ FMU41 - ... ▪ FMU42 - ... ▪ FMU44 - ...	CSA IS	▪ PROFIBUS PA ▪ FOUNDATION Fieldbus	T12 with overvoltage protection	ZD00102F
▪ FMU40 - ... ▪ FMU41 - ... ▪ FMU42 - ... ▪ FMU44 - ...	CSA XP	▪ HART (2-wire) ▪ PROFIBUS PA ▪ FOUNDATION Fieldbus	T12	ZD00100F
▪ FMU40 - ... ▪ FMU41 - ...	TIIS Ex ia IIC T6	HART (2-wire)	F12	ZD00138F



www.addresses.endress.com

Endress+Hauser

People for Process Automation