DATA SHEET

T 8048-2 EN

Type 3349 Aseptic Angle Valve

With USP-VI diaphragm

Application

Control valve for aseptic applications in the food and pharmaceutical industries according to DIN or ANSI standards with USP-VI diaphragm

Nominal size	**DN 6 to 100**	·	**NPS ¼ to 4**
Maximum pressure	**25 bar**	·	**360 psi**
Temperature range	**-10 to +160 °C**	·	**14 to 320 °F**



Fig. 1: *Type 3349 Valve with Type 3277 Pneumatic Actuator and Type 3730 Positioner*

Type 3349 Angle Valve with

- Type 3271 Pneumatic Actuator
- Type 3277 Pneumatic Actuator for integral positioner attachment
- Type 3379 Pneumatic Piston Actuator with an optional Type 3724 Positioner

Special features

- Aseptic design ensures safe product handling
- Plug with flow characteristic for good control accuracy
- Valve body made of stainless steel with low delta ferrite content (1.4435/316L)
- Wetted inside surfaces with a precision-lathed or polished finish
- Wetted sealing materials comply with FDA regulations
- USP Class VI-121 °C compliance

The valve body is designed without cavities and can be fitted with various end connections, depending on the version. The valves are suitable for CIP (cleaning-in-place) or SIP (sterilization-in-place). The plug stem guide is sealed by a PTFE diaphragm. A test connection allows the diaphragm to be monitored for leakage. The valve is suitable for aseptic applications.

Versions

Standard version · Hardware version HV01.1 · Angle valve in bar stock with USP-VI certification, DN 15 to 100 (NPS ½ to 4) · Maximum operating pressure according to Table 5 · Valve with

SAMSON AKTIENGESELLSCHAFT
Weismüllerstraße 3 · 60314 Frankfurt am Main, Germany
Phone: +49 69 4009-0 · samson@samsongroup.com · www.samsongroup.com

Edition August 2026

bolted-on bonnet · Plug stem sealed by PTFE diaphragm

Micro-flow valve version · Angle valve in bar stock with USP-VI certification, DN 6 to 25 (NPS ¼ to 1) · Maximum operating pressure according to Table 5 · Valve with bolted-on bonnet · Plug stem sealed by PTFE diaphragm

- **Type 3349** Valve with Type 3271 or Type 3277 Pneumatic Actuator (see Data Sheet ▶ T 8310-1)
- **Type 3349** Valve with Type 3379 Pneumatic Piston Actuator (see Mounting and Operating Instructions ▶ EB 8315)

Further versions

- **Stellite®-faced** seat and plug
- Valve plug with **PEEK soft seal** (seat bore 6 and larger)
- **V-port plug** for high pressure drops (seat bore 12 and larger)
- **V-port plug with PEEK soft seal** (seat bore 12 and larger)
- **Body materials:** Hastelloy® C22, Hastelloy® C4, Hastelloy® C276, Uranus B, Duplex, 14547/254SMO, Alloy 20 (N08020) · On request
- **Possible end connections** (on request) · Welding ends, threaded connections (aseptic), clamp connections (aseptic), flanges (aseptic) · See Table 2
- With **Type 3724 Positioner** · See Data Sheet ▶ T 8395 (only in combination with Type 3379 Pneumatic Piston Actuator)
- **Surface finishes** on request: Peak-to-valley height for external surfaces down to R_a 0.6 µm, inside surfaces down to R_a 0.4 µm possible
- **Packing** (optional) for micro-flow valve version

Principle of operation

Standard version

The process medium preferably flows through the valve in the flow-to-open (FTO) direction [1]. The flow-to-close (FTC) direction[1] is possible. The flow direction is indicated by an arrow on the valve body. The position of the valve plug determines the flow rate across the cross-sectional area of flow released between the plug and lathed seat. **In both flow directions, the valve body must be drained over the inline valve connection (Y) at the bottom of the body.**

Micro-flow valve version

The process medium always flows through the valve in the flow-to-close (FTC)[1] direction as indicated by the arrow. The position of the valve plug determines the flow rate across the cross-sectional area of flow released between the plug and lathed seat.

Optional packing: in the version with backup packing, the test connection is sealed by a stopper.

All versions

The plug stem in all versions is sealed by the diaphragm.

The test connection allows the diaphragm to be monitored for leakage (except when a backup packing is used). The test connection is fitted with a pipe to allow the safe drainage of any medium that escapes.

[1] FTO: Flow-to-open (flow under the plug)
FTC: Flow-to-close (flow over the plug)

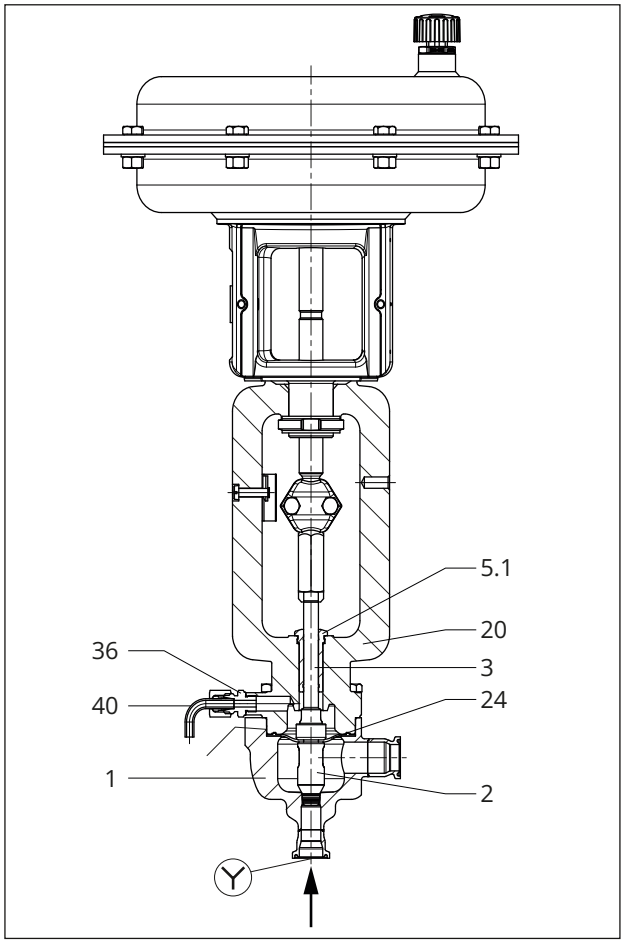

Fig. 2: *Type 3349 Angle Valve with Type 3277 Pneumatic Actuator*

1	Body	24	Diaphragm
2	Plug	36	Screw plug or nipple
3	Plug stem	40	Pipe
5.1	Stem seal	Y	Draining of the valve body over this connection
20	Standard yoke for Type 3271/3277 Actuator		

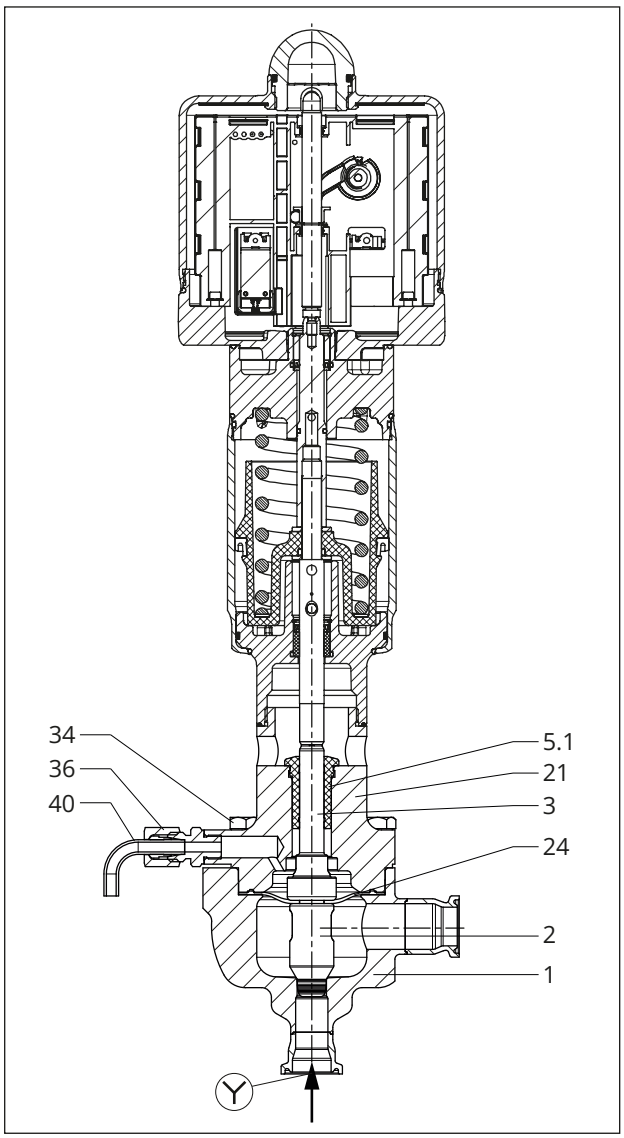

Fig. 3: *Type 3349 Angle Valve combined with Type 3379 Pneumatic Piston Actuator and Type 3724 Positioner*

1	Body	24	Diaphragm
2	Plug	34	Screw
3	Plug stem	36	Screw plug or nipple
5.1	Stem seal	40	Pipe
21	Standard valve bonnet with Type 3379 Actuator	Y	Draining of the valve body over this connection

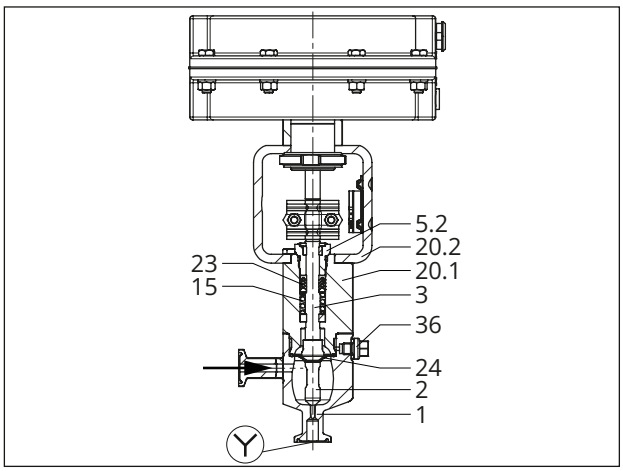

Fig. 4: *Type 3349 Angle Valve with Type 3271 Pneumatic Actuator in micro-flow valve version with packing*

1	Body	20.2	Yoke for micro-flow valve version with Type 3271/3277Actuator
2	Plug	23	Packing
3	Plug stem	24	Diaphragm
5.2	Threaded bushing	36	Screw plug or nipple
15	Spring	Y	Draining of the valve body over this connection
20.1	Valve bonnet for micro-flow valve version with Type 3271/3277 Actuator		

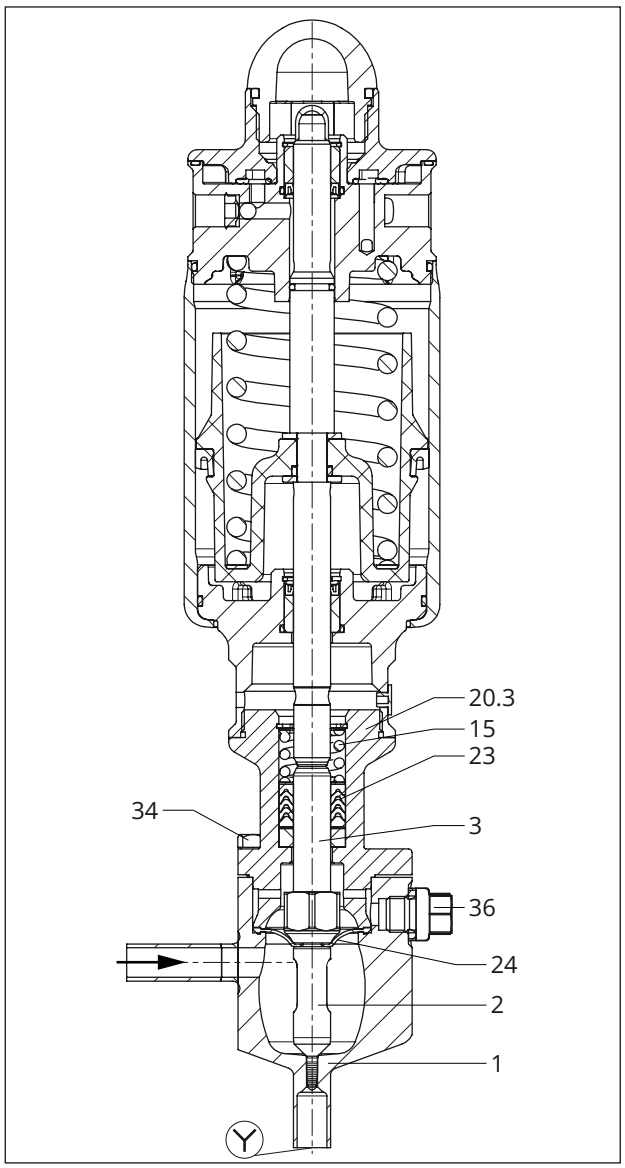

Fig. 5: *Type 3349 Angle Valve with Type 3379 Pneumatic Piston Actuator in micro-flow valve version with packing*

1	Body	23	Packing
2	Plug	24	Diaphragm
3	Plug stem	34	Screw
15	Spring	36	Screw plug or nipple
20.3	Valve bonnet for micro-flow valve version with Type 3379 Actuator	Y	Draining of the valve body over this connection

Table 1: *Technical data for Type 3349*

Version			DIN	ANSI
Body			Bar stock	
Nominal size		Micro-flow valve version	DN 6 to 25	NPS ¼ to 1
		Standard version	DN 15 to 100	NPS ½ to 4
Maximum pressure	Without end connections	Micro-flow valve version	10 bar	145 psi
		Standard version	25 bar[3]	360 psi[3]
	With end connections		See Table 5	
Seat-plug seal		Leakage class acc. to	DIN EN 60534-4	ANSI FCI 70-2
		Metal seal	IV	
		PEEK soft seal[1]	VI	
Plug stem seal			PTFE diaphragm certified according to USP Class VI	
Characteristic			Equal percentage or linear	
Flow direction		Micro-flow valve version	FTC (flow-to-close)	
		Standard version	FTO (flow-to-open) or FTC (flow-to-close)[4]	
Flow coefficients		Micro-flow valve version	K_{VS}: 0.01 to 0.25 · C_V: 0.012 to 0.3	
		Standard version	K_{VS}: 0.4 to 160 · C_V: 0.5 to 190	
Rangeability			See Table 7 and Table 8	
Cleaning			CIP (cleaning in place) or SIP (sterilization in place)	
Actuators			See Table 9 and Table 10	
Permissible temperatures[2]		Operating temperature	-10 to +160 °C	14 to 320 °F
		Sterilization temperature	180 °C for up to 30 min	356 °F for up to 30 min
Peak-to-valley height and surface finish		External	Glass bead blasted	
			R_a ≤0.6 µm · Polished	
		Internal	R_a ≤0.8 µm · Fine machine finish	
			R_a ≤0.6 µm · Polished	
			R_a ≤0.4 µm · Satin finish	
			R_a ≤0.4 µm · Mirror finish	
Dimensions of end connections			See Table 27, Table 28, Table 29, Table 30, Table 31 and Table 32	
Certificates			CFR Title 21 FDA Regulation (EC) No. 1935/2004 Regulation (EU) No. 10/2011 Regulation (EC) No. 2023/2006 USP-VI 121 °C ADI free EHEDG and 3-A certification, standard 53-07, see Table 2	
Conformity			CE	

1) Special version (not for micro-flow valve version)

2) Observe normative restrictions (see Table 5)

3) Mechanical design: 25 bar; functional design: 20 bar (see Table 4)

4) When the flow-to-close direction is used, the valve body must be drained over the side valve connection.

Table 2: *Certification depending on the valve versions of Type 3349*

Hardware version			**HV01**	**HV01.1**
Body version			**Bar stock**	
Versions with 3-A certification (53-07)	Nominal size DN/NPS		15 to 100/½ to 4	
	Flow coefficients K_{VS}/C_V		0.4 to 160/0.5 to 190	
	Bonnet		Bolted bonnet	
	Connection	Welding ends	All standards	
		Threaded connection	DIN 11864-1, form A · DIN 11853-1, form A · DIN 11851-2[1] · DIN 11887-1[1]	
		Clamp connections	DIN 11864-3, form A · DIN 11853-3, form A · DIN 32676[1] · ISO 2852[1] · BS 4825[1] · ASME BPE · NFE 29521 · JIS G 3447 · JIS G 3459	
		Flange connection (aseptic)	DIN 11864-2, form A · DIN 11853-2, form A	
	Body material		1.4435/316L and 1.4404/316L AISI 300 series (except for 301, 302, 303)	
	Internal surface finish		R_a ≤0.8 µm	
	Plug		Parabolic plug · V-port plug	
	Seat-plug seal		Metal seal · Soft seal (PEEK)	
	Diaphragm		100 % PTFE	
	Other		Actuator and valve accessories mounted to meet 3-A standard requirements.	
Versions with EHEDG certification (Type EL Class I)	Nominal size DN/NPS		DN 15, 20, 25, 32, 40[2], 50, 65/ NPS ½, ¾, 1, 1¼, 1½[2], 2, 2½	*)
	Flow coefficients K_{VS}/C_V		0.4, 0.63, 1, 1.6, 2.5, 4, 6.3, 10, 16, 25[2], 40, 60/ 0.5, 0.75, 1.2, 2, 3, 5, 7.5, 12, 20, 30[2], 47, 70	
	Bonnet		Bolted bonnet	
	Connection	Welding ends	All standards	
		Threaded connection	DIN 11864-1, form A · DIN 11853-1, form A · DIN 11851-2[1]	
		Clamp connections	DIN 11864-3, form A · DIN 11853-3, form A · DIN 32676[1] · ISO 2852[1] · BS 4825[1]	
		Flange connection (aseptic)	DIN 11864-2, form A · DIN 11853-2, form A	
	Body material		1.4435/316L and 1.4404/316L	
	Internal surface finish		R_a ≤0.8 µm	
	Plug		Parabolic plug	
	Seat-plug seal		Metal seal	
	Leakage detection		Yes	
	Diaphragm		100 % PTFE	

*) In preparation

1) Seals compliant with 3-A and EHEDG requirements must be used on site by the end user.

2) Except for DN 40/NPS 1½ and K_{VS} 25/C_V 30

Table 3: *Materials[1] for Type 3349*

Version		DIN	ANSI
Body		1.4435	316L
Plug stem		1.4404	316L
Plug		1.4435	316L
Diaphragm		PTFE	
Bonnet	Micro-flow valve DN 6 to 25	1.4404	316L
	DN 15 to 65	1.4409	316L
	DN 80/DN 100	1.4404	316L
Plug stem guide		PTFE	
Micro-flow valve: packing (special version)		PTFE	

1) Other materials on request

Diaphragm resistance

SAMSON has tested the service life of diaphragms used in the Type 3349 Angle Control Valve. For preventive maintenance, we recommend replacing the diaphragm after 300,000 strokes. Depending on the operating conditions (in particular pressure and temperature of the fluid), this replacement frequency can be extended based on feedback from individual use cases and with the help of the following tables.

Scope of testing All diaphragm sizes (nominal sizes DN 15 to 100)

Test conditions 144 strokes per minute (one stroke corresponds to a valve being stroked from 0 to 100 % or from 100 to 0 % travel)

Table 4: *Diaphragm resistance*

Testing	Result
Continuous stroking of the valve with water at ambient temperature and 10 bar	Average service life: 1,000,000 strokes Minimum service life: 500,000 strokes
Continuous stroking of the valve with steam at 160 °C and 6 bar for three hours followed by 180 °C and 10 bar for one hour	Minimum service life: 200,000 strokes

	Nominal valve size		
	DN 15/25 (OD 21.3/33.7) NPS ½/1	**DN 32/65 (OD 42.4/76.1) NPS 1¼/2½**	**DN 80/100 (OD 88.9/114.3) NPS ¾**
Diaphragm's service life at ambient temperature and 10 bar	3,600,000 strokes	3,200,000 strokes	600,000 strokes
Diaphragm's service life at 100 °C and 20 bar	500,000 strokes	500,000 strokes	400,000 strokes

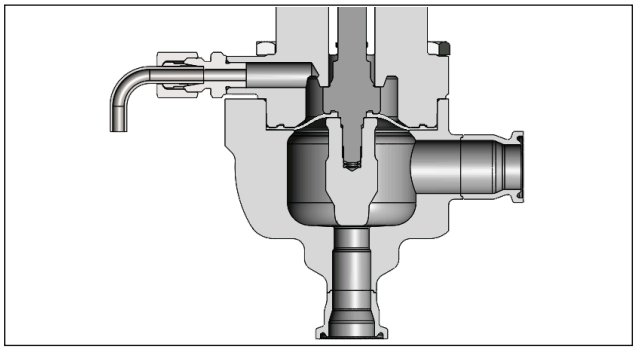

Fig. 6: *Valve OPEN*

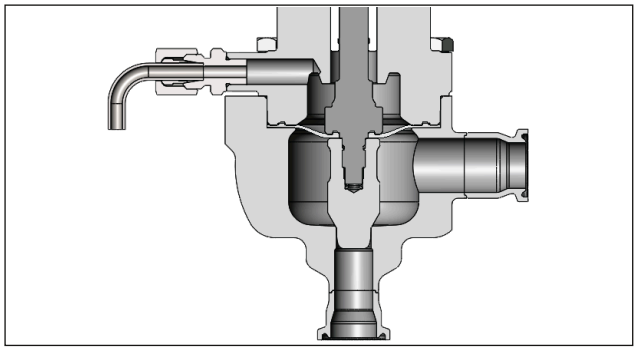

Fig. 7: *Valve CLOSED*

Maximum pressures

The maximum pressures are determined by taking either P_{max} specified in the standard or P_{max} of the valve (whichever is the lowest).

Table 5: *Maximum pressures in bar: Standard version (N) and micro-flow valve version (M)*

Valve			DN[1]	8	10	15	20	25	32	40	50	65	80	100
			(OD)[2]	(13.5)	(17.2)	(21.3)	(26.9)	(33.7)	(42.4)	(48.3)	(60.3)	(76.1)	(88.9)	(114.3)
End connections		**T_{max} in °C**	**NPS**	**¼**	**⅜**	**½**	**¾**	**1**	**1¼**	**1½**	**2**	**2½**	**3**	**4**
Welding ends	DIN 11866, Series A (DIN 11850, Series 2) (DIN EN 10357)	150	P_{max} (N)	–	–	25	25	25	25	25	25	25	25	25
			P_{max} (M)	10	10	10	10	10	–	–	–	–	–	–
	DIN 11866, Series B	150	P_{max} (N)	–	–	25	25	25	25	25	25	25	25	25
			P_{max} (M)	10	10	10	10	10	–	–	–	–	–	–
	DIN 11866, Series C (ASME BPE)	150	P_{max} (N)	–	–	25	25	25	–	25	25	25	25	25
			P_{max} (M)	–	10	10	10	10	–	–	–	–	–	–
	DIN EN ISO 1127, Series 1	–	P_{max} (N)	–	–	10[3]	10[3]	10[3]	10[3]	10[3]	10[3]	10[3]	10[3]	10[3]
			P_{max} (M)	10	10	10	10	10	–	–	–	–	–	–
	ISO 2037	–	P_{max} (N)	–	–	10[3]	10[3]	10[3]	10[3]	10[3]	10[3]	10[3]	10[3]	10[3]
			P_{max} (M)	–	10	10	10	10	–	–	–	–	–	–
	BS 4825 Part 1	–	P_{max} (N)	–	–	–	–	10[3]	–	10[3]	10[3]	10[3]	10[3]	10[3]
			P_{max} (M)	–	–	–	–	10	–	–	–	–	–	–
	JIS G 3447	–	P_{max} (N)	–	–	–	–	10[3]	10[3]	10[3]	10[3]	10[3]	10[3]	10[3]
			P_{max} (M)	–	–	–	–	10	–	–	–	–	–	–
	JIS G 3459	–	P_{max} (N)	–	–	10[3]	10[3]	10[3]	10[3]	10[3]	10[3]	10[3]	10[3]	10[3]
			P_{max} (M)	10	10	10	10	10	–	–	–	–	–	–
Threaded ends	DIN 11864-1, GS and DIN 11853-1 GS Form A, Series A	140	P_{max} (N)	–	–	25	25	25	25	25	25	25	25	25
			P_{max} (M)	–	10	10	10	10	–	–	–	–	–	–
	DIN 11864-1, GS and DIN 11853-1 GS Form A, Series B	140	P_{max} (N)	–	–	25	25	25	25	25	25	25	25	–
			P_{max} (M)	–	–	10	10	10	–	–	–	–	–	–
	DIN 11864-1, GS and DIN 11853-1 GS Form A, Series C	140	P_{max} (N)	–	–	–	–	25	–	25	25	25	25	–
			P_{max} (M)	–	–	–	–	10	–	–	–	–	–	–
	DIN 11851-2 for pipes according to DIN 11866, Series A	140	P_{max} (N)	–	–	25	25	25	25	25	25	25	25	25
			P_{max} (M)	–	–	–	–	–	–	–	–	–	–	–

Valve			DN[1]	8	10	15	20	25	32	40	50	65	80	100
			(OD)[2]	(13.5)	(17.2)	(21.3)	(26.9)	(33.7)	(42.4)	(48.3)	(60.3)	(76.1)	(88.9)	(114.3)
End connections		**T_{max} in °C**	**NPS**	**¼**	**⅜**	**½**	**¾**	**1**	**1¼**	**1½**	**2**	**2½**	**3**	**4**
Clamps	DIN 11864-3 NKS and DIN 11853-3 NKS Form A, Series A	140	P_{max} (N)	–	–	25	25	25	25	25	25	25	16	16
			P_{max} (M)	–	10	10	10	10	–	–	–	–	–	–
	DIN 11864-3 NKS Form A, Series B	140	P_{max} (N)	–	–	25	25	25	25	25	25	16	16	–
			P_{max} (M)	–	10	10	10	10	–	–	–	–	–	–
	DIN 11864-3 NKS Form A, Series C	140	P_{max} (N)	–	–	25	25	25	–	25	25	25	16	16
			P_{max} (M)	–	–	10	10	10	–	–	–	–	–	–
	DIN 32676, Series A	140	P_{max} (N)	–	–	25	25	25	25	25	16	16	10	10
			P_{max} (M)	–	–	–	–	–	–	–	–	–	–	–
	DIN 32676, Series B	140	P_{max} (N)	–	–	25	25	25	25	16	16	16	10	10
			P_{max} (M)	–	–	–	–	–	–	–	–	–	–	–
	DIN 32676, Series C	140	P_{max} (N)	–	–	25	25	25	–	25	16	16	16	10
			P_{max} (M)	–	–	–	–	–	–	–	–	–	–	–
	BS 4825 Part 3	–	P_{max} (N)	–	–	–	–	10[3]	–	10[3]	10[3]	10[3]	10[3]	10[3]
			P_{max} (M)	–	–	–	–	–	–	–	–	–	–	–
	ASME BPE	20	P_{max} (N)	–	–	13.8	13.8	13.8	–	13.8	13.8	13.8	13.8	13.8
			P_{max} (M)	–	–	–	–	–	–	–	–	–	–	–
		121	P_{max} (N)	–	–	11.4	11.4	11.4	–	11.4	11.4	11.4	10.4	8.6
			P_{max} (M)	–	–	–	–	–	–	–	–	–	–	–
	OSS for JIS G 3447	–	P_{max} (N)	–	–	–	–	10[3]	10[3]	10[3]	10[3]	10[3]	10[3]	10[3]
			P_{max} (M)	–	–	–	–	–	–	–	–	–	–	–
	OSS for JIS G 3459	–	P_{max} (N)	–	–	–	–	10[3]	10[3]	10[3]	10[3]	10[3]	10[3]	10[3]
			P_{max} (M)	–	–	–	–	–	–	–	–	–	–	–
Flanges	DIN 11864-2 NF and DIN 11853-2 NF Form A, Series A	140	P_{max} (N)	–	–	25	25	25	25	25	16	16	16	16
			P_{max} (M)	–	10	10	10	10	–	–	–	–	–	–
	DIN 11864-2 NF and DIN 11853-2 NF Form A, Series B	140	P_{max} (N)	–	–	25	25	25	16	16	16	16	16	10
			P_{max} (M)	–	–	10	10	10	–	–	–	–	–	–
	DIN 11864-2 NF and DIN 11853-2 NF Form A, Series C	140	P_{max} (N)	–	–	25	25	25	–	25	16	16	16	16
			P_{max} (M)	–	–	–	–	10	–	–	–	–	–	–
	PN 40 DIN EN 1092-1 B2	160	P_{max} (N)	–	–	25	25	25	25	25	25	25	25	25
			P_{max} (M)	–	–	–	–	–	–	–	–	–	–	–
	Class 150 ASME B16.5	20	P_{max} (N)	–	–	19	19	19	–	19	19	19	19	19
			P_{max} (M)	–	–	–	–	–	–	–	–	–	–	–
		150	P_{max} (N)	–	–	14.5	14.5	14.5	–	14.5	14.5	14.5	14.5	14.5
			P_{max} (M)	–	–	–	–	–	–	–	–	–	–	–

1) DN 6 on request

2) Values in parentheses according to DIN 11866 Series B

3) Higher pressure on request

Table 6: *Standards withdrawn · Maximum pressures in bar: Standard version (N) and micro-flow valve version (M)*

Valve			DN[1]	8	10	15	20	25	32	40	50	65	80	100
			(OD)[2]	(13.5)	(17.2)	(21.3)	(26.9)	(33.7)	(42.4)	(48.3)	(60.3)	(76.1)	(88.9)	(114.3)
End connections[3]		T_{max} in °C	NPS	¼	⅜	½	¾	1	1¼	1½	2	2½	3	4
Welding ends	SMS 3008	150	P_{max} (N)	-	-	25	-	25	-	25	25	25	25	25
			P_{max} (M)		10	10		10		-	-	-	-	-
Threaded ends	ISO 2853	140	P_{max} (N)	-	-	-	-	-	25	25	25	25	25	-
			P_{max} (M)						-	-	-	-	-	
	SMS 1146	20	P_{max} (N)	-	-	-	-	6	6	6	6	6	6	6
			P_{max} (M)					-	-	-	-	-	-	-

1) DN 6 on request

2) Values in parentheses according to DIN 11866 Series B

3) SMS 3008, SMS 1146, ISO 2852 and ISO 2853 are withdrawn standards. These end connections are still available on request for service work, replacement and sustaining compatibility in existing plants.

Flow coefficients and rangeability

Table 7: *K_{VS} and C_V coefficients (micro-flow valve version)*

			K_{VS}	0.01	0.016	0.025	0.04	0.063	0.1	0.16	0.25
			C_V	0.012	0.02	0.03	0.05	0.075	0.12	0.2	0.3
Standard plug				Parabolic plug							
Rangeability			Parabolic plug	15:1	20:1	25:1	35:1	45:1	50:1		
			V-port plug	*)							
Seat Ø in mm			Parabolic plug	3							
			V-port plug	*)							
DN[1]	NPS	(OD)[2]	Rated travel								
8	¼	(13.5)	7.5 mm	•	•	•	•	•	•	•	•
10	⅜	(17.2)		•	•	•	•	•	•	•	•
15	½	(21.3)		•	•	•	•	•	•	•	•
20	¾	(26.9)		•	•	•	•	•	•	•	•
25	1	(33.7)		•	•	•	•	•	•	•	•

*) Not available

1) DN 6 on request

2) Values in parentheses according to DIN 11866 Series B

Table 8: *K_{VS} and C_V coefficients (standard version)*

			K_{VS}	0.4	0.63	1	1.6	2.5	4	6.3	10	6.3	10	16	25	40	60	80	100	160
			C_V	0.5	0.75	1.2	2	3	5	7.5	12	7.5	12	20	30	47	70	95	120	190
Standard plug				Parabolic plug											V-port plug					
Rangeability			Parabolic plug	50:1					50:1			50:1			50:1			*)		
			V-port plug	*)			50:1		50:1			50:1			50:1					
Seat Ø in mm			Parabolic plug	6			12			24		31			38	48	63	*)		
			V-port plug	*)			12		24	24		31			38	48	63	80		100
DN	**NPS**	**(OD)**[1]	**Rated travel**																	
15	½	(21.3)	7.5 mm	•	•	•	•	•	•											
20	¾	(26.9)		•	•	•	•	•	•											
25	1	(33.7)		•	•	•	•	•	•	•	•									
32	1¼	(42.4)	15 mm									•	•	•						
40	1½	(48.3)										•	•	•	•					
50	2	(60.3)										•	•	•	•	•				
65	2½	(76.1)										•	•	•	•	•	•			
80	3	(88.9)										•	•	•	•	•	•			
80	3	(88.9)	30 mm															•		
100	4	(114.3)															•	•	•	•

*) Not available

1) Values in parentheses according to DIN 11866 Series B

Possible actuator combinations

Table 9: *Actuators for micro-flow valve version*

	K_{VS}	0.01	0.016	0.025	0.04	0.063	0.1	0.16	0.25
Actuator	C_V	0.012	0.02	0.03	0.05	0.075	0.12	0.2	0.3
Type 3271/3277		•	•	•	•	•	•	•	•
Type 3379		•	•	•	•	•	•	•	•

*) Not available

Table 10: *Actuators for standard valve version*

	K_{VS}	0.4	0.63	1	1.6	2.5	4	6.3	10	6.3	10	16	25	40	60	80	100	160
Actuator	C_V	0.5	0.75	1.2	2	3	5	7.5	12	7.5	12	20	30	47	70	95	120	190
Type 3271/3277		•	•	•	•	•	•	•	•	•	•	•	•	•	•	•	•	•
Type 3379		•	•	•	•	•	•	•	•	•	•	•	•	•	*)	*)	*)	*)

*) Not available

Permissible differential pressures for Type 3349 with "actuator stem extends" fail-safe action · Metal seal (leakage class IV)

Table 11: *Type 3349 Control Valve with Type 3271/3277 Actuator · Pressures in bar*

Nominal size		Seat Ø in mm	K_{VS}	Actuator area in cm²	Bench range in bar	Operating range in bar when p_2 = 0 bar (valve CLOSED)	
DN	NPS					Δp = 5 bar	Δp = 10 bar[1)]
15 to 25	½ to 1	6	0.4 to 1.0	120	0.4 to 2.0	1.2 to 2.0	1.2 to 2.0
		12	1.6 to 4.0				
25	1	24	6.3 to 10				
15 to 25	½ to 1	6	0.4 to 1.0	175v2	0.4 to 2.0	1.2 to 2.0	1.2 to 2.0
		12	1.6 to 4.0				
25	1	24	6.3 to 10				
32 to 65	1¼ to 2½	31	6.3 to 16	350	0.6 to 3.0	0.6 to 3.0	1.2 to 3.6
40 to 65	1½ to 2½	38	25				
50 to 65	2 to 2½	48	40				
65	2½	63	60				
32 to 65	1¼ to 2½	31	6.3 to 16	355v2	0.4 to 2.0	1.2 to 2.0	1.2 to 2.0
40 to 65	1½ to 2½	38	25				
50 to 65	2 to 2½	48	40				
65	2½	63	60				
80	3	80	80	750v2	1.9 to 3.1	1.9 to 3.1	2.2 to 3.4
100	4	80	100				
100	4	100	100				

1) Higher pressure on request

Table 12: *Type 3349 Control Valve with Type 3271/3277 Actuator · Pressures in psi*

Nominal size		Seat Ø in mm	C_V	Actuator area in cm²	Bench range in psi	Operating range in psi when p_2 = 0 psi (valve CLOSED)	
DN	NPS					Δp = 73 psi	Δp = 145 psi[1)]
15 to 25	½ to 1	6	0.5 to 1.2	120	6 to 30	18 to 30	18 to 30
		12	2 to 5				
25	1	24	7.5 to 12				
15 to 25	½ to 1	6	0.5 to 1.2	175v2	6 to 30	18 to 30	18 to 30
		12	2 to 5				
25	1	24	7.5 to 12				
32 to 65	1¼ to 2½	31	7.5 to 20	350	9 to 44	9 to 44	18 to 53
40 to 65	1½ to 2½	38	30				
50 to 65	2 to 2½	48	46				
65	2½	63	70				
32 to 65	1¼ to 2½	31	7.5 to 20	355v2	6 to 30	18 to 30	18 to 30
40 to 65	1½ to 2½	38	30				
50 to 65	2 to 2½	48	46				
65	2½	63	70				
80	3	80	95	750v2	28 to 45	28 to 45	32 to 50
100	4	80	120				
100	4	100	190				

1) Higher pressure on request

Table 13: *Type 3349 Control Valve with Type 3379 Actuator · Pressures in bar*

Nominal size		Seat Ø in mm	K_{VS}	Actuator area in cm²	Bench range in bar	Operating range in bar	Δp_{max} in bar
DN[1]	NPS						
8 to 25[2]	¼ to 1[2]	3	0.01 to 0.25	31	2.3 to 3.7	2.3 to 3.0	10
15 to 25	½ to 1	6	0.4 to 1.0	31	2.3 to 3.7	2.3 to 3.0	7
15 to 25	½ to 1	6	0.4 to 1.0	63	2.5 to 4.0	2.5 to 3.3	10[3]
15 to 25	½ to 1	12	1.6 to 4.0	31	2.3 to 3.7	2.3 to 3.0	7
15 to 25	½ to 1	12	1.6 to 4.0	63	2.5 to 4.0	2.5 to 3.3	10[3]
25	1	24	6.3 to 10	31	2.3 to 3.7	2.3 to 3.0	7
25	1	24	6.3 to 10	63	2.5 to 4.0	2.5 to 3.3	10[3]
25	1	24	6.3 to 10	63	3.3 to 5.6	3.3 to 4.5	–
32 to 50	1¼ to 2	31	6.3 to 16	63	3.3 to 5.6	3.3 to 5.6	7
40 to 50	1½ to 2	38	25	63	3.3 to 5.6	3.3 to 5.6	8
50	2	48	40	63	3.3 to 5.6	3.3 to 5.6	8

1) DN 6 on request

2) Micro-flow valve version

3) Higher pressure on request

Table 14: *Type 3349 Control Valve with Type 3379 Actuator · Pressures in psi*

Nominal size		Seat Ø in mm	C_V	Actuator area in cm²	Bench range in psi	Operating range in psi	Δp_{max} in psi
DN[1]	NPS						
8 to 25[2]	¼ to 1[2]	3	0.01 to 0.3	31	33 to 53	33 to 43	145
15 to 25	½ to 1	6	0.5 to 1.2	31	33 to 53	33 to 43	102
15 to 25	½ to 1	6	0.5 to 1.2	63	36 to 58	36 to 47	145[3]
15 to 25	½ to 1	12	2 to 5	31	33 to 53	33 to 43	102
15 to 25	½ to 1	12	2 to 5	63	36 to 58	36 to 47	145[3]
25	1	24	7.5 to 12	31	33 to 53	33 to 43	102
25	1	24	7.5 to 12	63	36 to 58	36 to 47	145[3]
25	1	24	7.5 to 12	63	47 to 81	47 to 65	–
32 to 50	1¼ to 2	31	7.5 to 20	63	47 to 81	47 to 81	102
40 to 50	1½ to 2	38	30	63	47 to 81	47 to 81	116
50	2	48	47	63	47 to 81	47 to 81	116

1) DN 6 on request

2) Micro-flow valve version

3) Higher pressure on request

Permissible differential pressures for Type 3349 with "actuator stem retracts" fail-safe action · Metal seal (leakage class IV)

Table 15: *Type 3349 Control Valve with Type 3271/3277 Actuator · Pressures in bar*

Nominal size		Seat Ø in mm	K_{VS}	Actuator area in cm²	Bench range in bar	Operating range in bar when p_2 = 0 bar (valve CLOSED)	
DN	NPS					Δp = 5 bar	Δp = 10 bar[1]
15 to 25	½ to 1	6	0.4 to 1.0	120	0.4 to 2.0 (operating range 0.4 to 1.3)	1.8	2.1
		12	1.6 to 4.0				
25	1	24	6.3 to 10				
15 to 25	½ to 1	6	0.4 to 1.0	175v2		1.6	1.8
		12	1.6 to 4.0				
25	1	24	6.3 to 10				
32 to 65	1¼ to 2½	31	6.3 to 16	350	0.2 to 1.0[2]	1.6	2.1
40 to 65	1½ to 2½	38	25				
50 to 65	2 to 2½	48	40				
65	2½	63	60				
32 to 65	1¼ to 2½	31	6.3 to 16	355v2	0.4 to 2.0 (operating range 0.4 to 1.3)	1.8	2.3
40 to 65	1½ to 2½	38	25				
50 to 65	2 to 2½	48	40				
65	2½	63	60				
80	3	80	80	750v2	0.2 to 1.0[2]	2.1	3.0
100	4	80	100				
100	4	100	100				

1) Higher pressure on request

2) Operating range corresponds to bench range

Table 16: *Type 3349 Control Valve with Type 3271/3277 Actuator · Pressures in psi*

Nominal size		Seat Ø in mm	C_V	Actuator area in cm²	Bench range in psi	Operating range in psi when p_2 = 0 psi (valve CLOSED)	
DN	NPS					Δp = 73 psi	Δp = 145 psi[1]
15 to 25	½ to 1	6	0.5 to 1.2	120	6 to 30 (operating range 6 to 18)	27	31
		12	2 to 5				
25	1	24	7.5 to 12				
15 to 25	½ to 1	6	0.5 to 1.2	175v2		24	27
		12	2 to 5				
25	1	24	7.5 to 12				
32 to 65	1¼ to 2½	31	7.5 to 20	350	3 to 15[2]	24	30
40 to 65	1½ to 2½	38	30				
50 to 65	2 to 2½	48	46				
65	2½	63	70				
32 to 65	1¼ to 2½	31	7.5 to 20	355v2	6 to 30 (operating range 6 to 18)	27	33
40 to 65	1½ to 2½	38	30				
50 to 65	2 to 2½	48	46				
65	2½	63	70				
80	3	80	95	750v2	3 to 15[2]	31	44
100	4	80	120				
100	4	100	190				

1) Higher pressure on request

2) Operating range corresponds to bench range

Table 17: *Type 3349 Control Valve with Type 3379 Actuator · Pressures in bar*

Nominal size		Seat Ø in mm	K_{VS}	Actuator area in cm²	Bench range in bar	Operating range in bar	Required supply pressure	Δp_{max} in bar
DN[1]	NPS							
8 to 25[2]	¼ to 1[2]	3	0.01 to 0.25	31	2.3 to 3.7	3.0 to 3.7	6	9
15 to 25	½ to 1	6	0.4 to 1.0	31	2.3 to 3.7	3.0 to 3.7	6	7
15 to 25	½ to 1	6	0.4 to 1.0	63	1.0 to 1.9	1.5 to 1.9	3.4	10[3]
15 to 25	½ to 1	12	1.6 to 4.0	31	2.3 to 3.7	3.0 to 3.7	6	7
15 to 25	½ to 1	12	1.6 to 4.0	63	1.0 to 1.9	1.5 to 1.9	3.4	10[3]
25	1	24	6.3 to 10	31	2.3 to 3.7	3.0 to 3.7	6	7
25	1	24	6.3 to 10	63	1.0 to 1.9	1.5 to 1.9	3.9	10[3]
32 to 50	1¼ to 2	31	6.3 to 16	63	1.0 to 1.9	1.0 to 1.9	5.6	7
							6	8
40 to 50	1½ to 2	38	25	63	1.0 to 1.9	1.0 to 1.9	5.2	7
							5.6	8
							6	9
50	2	48	40	63	1.0 to 1.9	1.0 to 1.9	5.3	7
							5.7	8
							6	9

1) DN 6 on request

2) Micro-flow valve version

3) Higher pressure on request

Table 18: *Type 3349 Control Valve with Type 3379 Actuator · Pressures in psi*

Nominal size		Seat Ø in mm	C_V	Actuator area in cm²	Bench range in psi	Operating range in psi	Required supply pressure	Δp_{max} in psi
DN[1]	NPS							
8 to 25[2]	¼ to 1[2]	3	0.01 to 0.3	31	33 to 53	43 to 53	87	130
15 to 25	½ to 1	6	0.5 to 1.2	31	33 to 53	43 to 53	87	102
15 to 25	½ to 1	6	0.5 to 1.2	63	14 to 27	21 to 27	49	145[3]
15 to 25	½ to 1	12	2 to 5	31	33 to 53	43 to 53	87	102
15 to 25	½ to 1	12	2 to 5	63	14 to 27	21 to 27	49	145[3]
25	1	24	7.5 to 12	31	33 to 53	43 to 53	87	102
25	1	24	7.5 to 12	63	14 to 27	21 to 27	56	145[3]
32 to 50	1¼ to 2	31	7.5 to 20	63	14 to 27	21 to 27	81	102
							87	116
40 to 50	1½ to 2	38	30	63	14 to 27	21 to 27	75	102
							81	116
							87	130
50	2	48	47	63	14 to 27	21 to 27	76	102
							82	116
							87	130

1) DN 6 on request

2) Micro-flow valve version

3) Higher pressure on request

Permissible differential pressures for Type 3349 with "actuator stem extends" fail-safe action · Soft PEEK seal (leakage class VI)

Table 19: *Type 3349 Control Valve with Type 3271/3277 Actuator · Pressures in bar*

Nominal size		Seat Ø in mm	K_{VS}	Actuator area in cm²	Bench range in bar	Operating range in bar when p_2 = 0 bar (valve CLOSED)	
DN	NPS					Δp = 5 bar	Δp = 10 bar[1)]
32 to 65	1¼ to 2½	31	6.3 to 16	350	1.2 to 3.6	1.2 to 3.6	2.1 to 3.3
40 to 65	1½ to 2½	38	25				
50 to 65	2 to 2½	48	40				
65	2½	63	60				
32 to 65	1¼ to 2½	31	6.3 to 16	355v2	1.2 to 3.6	2.4 to 3.6	2.4 to 3.6
40 to 65	1½ to 2½	38	25				
50 to 65	2 to 2½	48	40				
65	2½	63	60				
80	3	80	80	750v2	1.9 to 3.1	1.9 to 3.1	2.5 to 4.2
100	4	80	100				
100	4	100	100				

1) Higher pressure on request

Table 20: *Type 3349 Control Valve with Type 3271/3277 Actuator · Pressures in psi*

Nominal size		Seat Ø in mm	C_V	Actuator area in cm²	Bench range in psi	Operating range in psi when p_2 = 0 psi (valve CLOSED)	
DN	NPS					Δp = 73 psi	Δp = 145 psi[1)]
32 to 65	1¼ to 2½	31	7.5 to 20	350	18 to 53	18 to 53	31 to 48
40 to 65	1½ to 2½	38	30				
50 to 65	2 to 2½	48	46				
65	2½	63	70				
32 to 65	1¼ to 2½	31	7.5 to 20	355v2	18 to 53	35 to 53	35 to 53
40 to 65	1½ to 2½	38	30				
50 to 65	2 to 2½	48	46				
65	2½	63	70				
80	3	80	95	750v2	28 to 45	28 to 45	37 to 61
100	4	80	120				
100	4	100	190				

1) Higher pressure on request

Table 21: *Type 3349 Control Valve with Type 3379 Actuator · Pressures in bar*

Nominal size		Seat Ø in mm	K_{VS}	Actuator area in cm²	Bench range in bar	Operating range in bar	Δp_{max} in bar
DN[1]	NPS						
8 to 25[2]	¼ to 1[2]	3	0.01 to 0.25	31	2.3 to 3.7	2.3 to 3.0	–
15 to 25	½ to 1	6	0.4 to 1.0	31	2.3 to 3.7	2.3 to 3.0	7
15 to 25	½ to 1	6	0.4 to 1.0	63	2.5 to 4.0	2.5 to 3.3	10[3]
15 to 25	½ to 1	12	1.6 to 4.0	31	2.3 to 3.7	2.3 to 3.0	6
15 to 25	½ to 1	12	1.6 to 4.0	63	2.5 to 4.0	2.5 to 3.3	10[3]
25	1	24	6.3 to 10	31	2.3 to 3.7	2.3 to 3.0	–
25	1	24	6.3 to 10	63	2.5 to 4.0	2.5 to 3.3	8
25	1	24	6.3 to 10	63	3.3 to 5.6	3.3 to 4.5	10[3]
32 to 50	1¼ to 2	31	6.3 to 16	63	3.3 to 5.6	3.3 to 5.6	4
40 to 50	1½ to 2	38	25	63	3.3 to 5.6	3.3 to 5.6	4
50	2	48	40	63	3.3 to 5.6	3.3 to 5.6	3

1) DN 6 on request

2) Micro-flow valve version

3) Higher pressure on request

Table 22: *Type 3349 Control Valve with Type 3379 Actuator · Pressures in psi*

Nominal size		Seat Ø in mm	C_V	Actuator area in cm²	Bench range in psi	Operating range in psi	Δp_{max} in psi
DN[1]	NPS						
8 to 25[2]	¼ to 1[2]	3	0.01 to 0.3	31	33 to 53	33 to 43	–
15 to 25	½ to 1	6	0.5 to 1.2	31	33 to 53	33 to 43	102
15 to 25	½ to 1	6	0.5 to 1.2	63	36 to 58	36 to 47	145[3]
15 to 25	½ to 1	12	2 to 5	31	33 to 53	33 to 43	87
15 to 25	½ to 1	12	2 to 5	63	36 to 58	36 to 47	145[3]
25	1	24	7.5 to 12	31	33 to 53	33 to 43	–
25	1	24	7.5 to 12	63	36 to 58	36 to 47	116
25	1	24	7.5 to 12	63	47 to 81	47 to 65	145[3]
32 to 50	1¼ to 2	31	7.5 to 20	63	47 to 81	47 to 81	58
40 to 50	1½ to 2	38	30	63	47 to 81	47 to 81	58
50	2	48	47	63	47 to 81	47 to 81	43

1) DN 6 on request

2) Micro-flow valve version

3) Higher pressure on request

Permissible differential pressures for Type 3349 with "actuator stem retracts" fail-safe action · Soft PEEK seal (leakage class VI)

Table 23: *Type 3349 Control Valve with Type 3271/3277 Actuator · Pressures in bar*

Nominal size		Seat Ø in mm	K_{VS}	Actuator area in cm²	Bench range in bar	Operating range in bar when p_2 = 0 bar (valve CLOSED)	
DN	NPS					Δp = 5 bar	Δp = 10 bar[1]
15 to 25	½ to 1	6	0.4 to 1.0	120	0.4 to 2.0 (operating range 0.4 to 1.2)	2.2	3.1
		12	1.6 to 4.0				
25	1	24	6.3 to 10				
15 to 25	½ to 1	6	0.4 to 1.0	175v2		1.9	2.6
		12	1.6 to 4.0				
25	1	24	6.3 to 10				
32 to 65	1¼ to 2½	31	6.3 to 16	350	0.2 to 1.0[2]	2.0	2.8
40 to 65	1½ to 2½	38	25				
50 to 65	2 to 2½	48	40				
65	2½	63	60				
32 to 65	1¼ to 2½	31	6.3 to 16	355v2	0.4 to 2.0 (operating range 0.4 to 1.2)	2.2	2.9
40 to 65	1½ to 2½	38	25				
50 to 65	2 to 2½	48	40				
65	2½	63	60				
80	3	80	80	750v2	0.2 to 1.0[2]	2.2	3.2
100	4	80	100				
100	4	100	100				

1) Higher pressure on request

2) Operating range corresponds to bench range

Table 24: *Type 3349 Control Valve with Type 3271/3277 Actuator · Pressures in psi*

Nominal size		Seat Ø in mm	C_V	Actuator area in cm²	Bench range in psi	Operating range in psi when p_2 = 0 psi (valve CLOSED)	
DN	NPS					Δp = 73 psi	Δp = 145 psi[1]
15 to 25	½ to 1	6	0.5 to 1.2	120	6 to 30 (operating range 6 to 18)	32	45
		12	2 to 5				
25	1	24	7.5 to 12				
15 to 25	½ to 1	6	0.5 to 1.2	175v2		28	38
		12	2 to 5				
25	1	24	7.5 to 12				
32 to 65	1¼ to 2½	31	7.5 to 20	350	3 to 15[2]	30	41
40 to 65	1½ to 2½	38	30				
50 to 65	2 to 2½	48	46				
65	2½	63	70				
32 to 65	1¼ to 2½	31	7.5 to 20	355v2	6 to 30 (operating range 6 to 18)	32	43
40 to 65	1½ to 2½	38	30				
50 to 65	2 to 2½	48	46				
65	2½	63	70				
80	3	80	95	750v2	3 to 15[2]	32	47
100	4	80	120				
100	4	100	190				

1) Higher pressure on request

2) Operating range corresponds to bench range

Table 25: *Type 3349 Control Valve with Type 3379 Actuator · Pressures in bar*

Nominal size		Seat Ø in mm	K_{VS}	Actuator area in cm²	Bench range in bar	Operating range in bar	Required supply pressure	Δp_{max} in bar
DN[1]	NPS							
8 to 25[2]	¼ to 1[2]	3	0.01 to 0.25	31	2.3 to 3.7	3.0 to 3.7	–	–
15 to 25	½ to 1	6	0.4 to 1.0	31	2.3 to 3.7	3.0 to 3.7	6	7
15 to 25	½ to 1	6	0.4 to 1.0	63	1.0 to 1.9	1.5 to 1.9	3.6	10[3]
15 to 25	½ to 1	12	1.6 to 4.0	31	2.3 to 3.7	3.0 to 3.7	6	6
15 to 25	½ to 1	12	1.6 to 4.0	63	1.0 to 1.9	1.5 to 1.9	3.8	10[3]
25	1	24	6.3 to 10	31	2.3 to 3.7	3.0 to 3.7	–	–
25	1	24	6.3 to 10	63	1.0 to 1.9	1.5 to 1.9	4.8	10[3]
32 to 50	1¼ to 2	31	6.3 to 16	63	1.0 to 1.9	1.0 to 1.9	6	5
40 to 50	1½ to 2	38	25	63	1.0 to 1.9	1.0 to 1.9	6	5
50	2	48	40	63	1.0 to 1.9	1.0 to 1.9	6	4

1) DN 6 on request

2) Micro-flow valve version

3) Higher pressure on request

Table 26: *Type 3349 Control Valve with Type 3379 Actuator · Pressures in psi*

Nominal size		Seat Ø in mm	C_V	Actuator area in cm²	Bench range in psi	Operating range in psi	Required supply pressure	Δp_{max} in psi
DN[1]	NPS							
8 to 25[2]	¼ to 1[2]	3	0.01 to 0.3	31	33 to 53	43 to 53	–	–
15 to 25	½ to 1	6	0.5 to 1.2	31	33 to 53	43 to 53	87	102
15 to 25	½ to 1	6	0.5 to 1.2	63	14 to 27	21 to 27	52	145[3]
15 to 25	½ to 1	12	2 to 5	31	33 to 53	43 to 53	87	87
15 to 25	½ to 1	12	2 to 5	63	14 to 27	21 to 27	55	145[3]
25	1	24	7.5 to 12	31	33 to 53	43 to 53	–	–
25	1	24	7.5 to 12	63	14 to 27	21 to 27	69	145[3]
32 to 50	1¼ to 2	31	7.5 to 20	63	14 to 27	21 to 27	87	72
40 to 50	1½ to 2	38	30	63	14 to 27	21 to 27	87	72
50	2	48	47	63	14 to 27	21 to 27	87	58

1) DN 6 on request

2) Micro-flow valve version

3) Higher pressure on request

Dimensional drawings

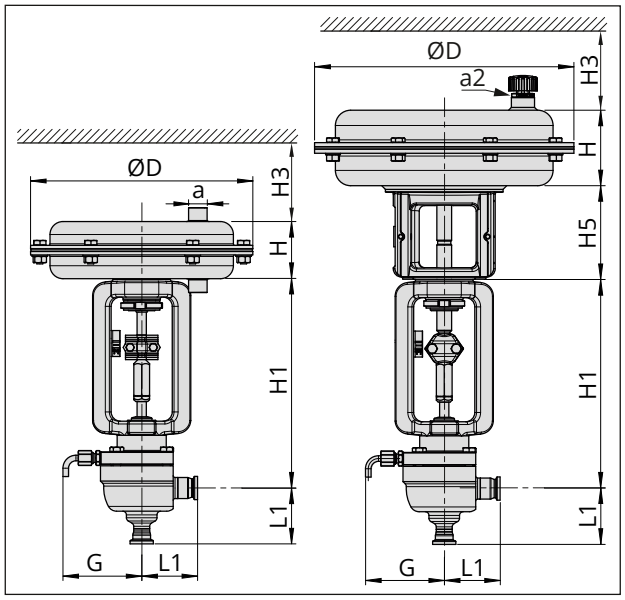

Fig. 8: *Type 3349 Valve with Type 3271 Actuator (left) and Type 3277 Actuator (right)*

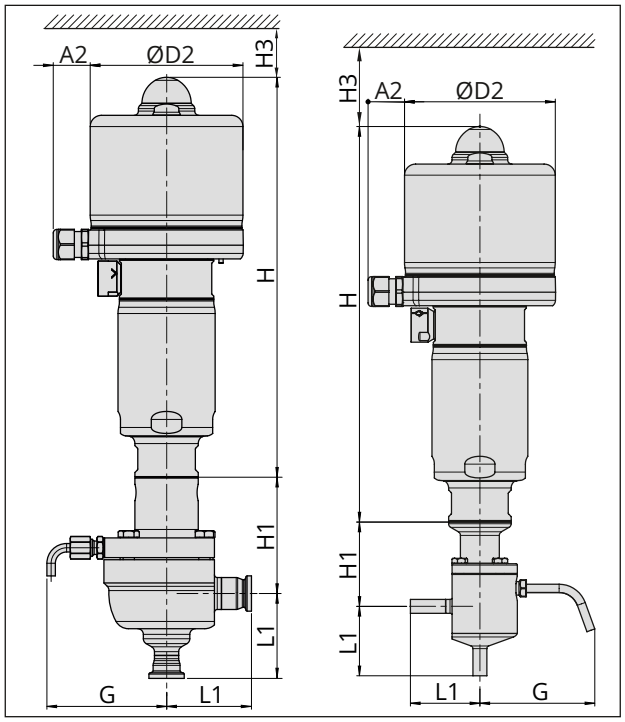

Fig. 9: *Type 3349 Valve with Type 3379 Actuator · Micro-flow valve version (right)*

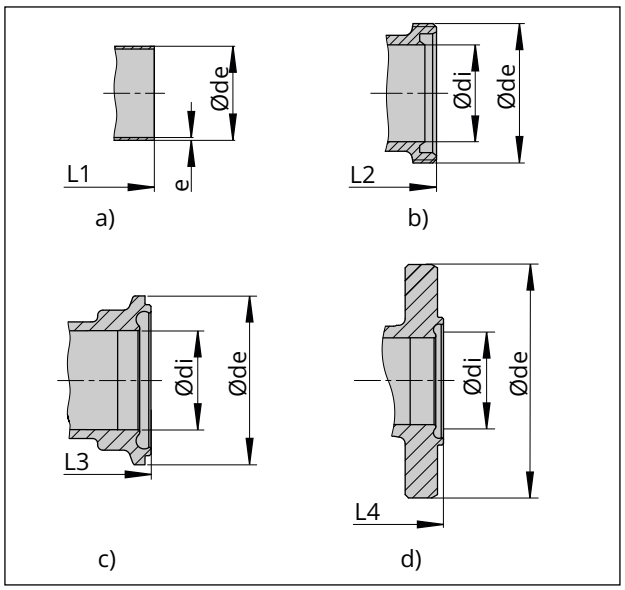

Fig. 10: *Dimensional drawings of end connections to the pipeline*

a) Welding end
b) Threaded connection
c) Clamp connections
d) Flange connection

Dimensions

Table 27: *Type 3349 Control Valve · Standard version · Dimensions in mm*

Valve	**DN**	**15**	**20**	**25**	**32**	**40**	**50**	**65**	**80**	**100**
	(OD)[1)]	**(21.3)**	**(26.9)**	**(33.7)**	**(42.4)**	**(48.3)**	**(60.3)**	**(76.1)**	**(88.9)**	**(114.3)**
	NPS	**½**	**¾**	**1**	**1¼**	**1½**	**2**	**2½**	**3**	**4**
	Rated travel	**7.5**	**7.5**	**7.5**	**15**	**15**	**15**	**15**	**15/30**	**30**
	With Type ... Actuator									
H1	3271/3277	234	231	228	262	260	271	271	336	348
	3379	90	90	90	136	136	136	–	–	–

Valve	DN	15	20	25	32	40	50	65	80	100
	(OD)[1]	(21.3)	(26.9)	(33.7)	(42.4)	(48.3)	(60.3)	(76.1)	(88.9)	(114.3)
	NPS	½	¾	1	1¼	1½	2	2½	3	4
	Rated travel	**7.5**	**7.5**	**7.5**	**15**	**15**	**15**	**15**	**15/30**	**30**
G	3271/3277	86	86	86	113	113	113	113	155	155
	3379	85	85	85	113	113	113	–	–	–

[1] Values in parentheses according to DIN 11866 Series B

Table 28: *Type 3349 Control Valve · Micro-flow valve version · Dimensions in mm*

Valve		DN[1]	8	10	15	20	25
		(OD)[2]	(13.5)	(17.2)	(21.3)	(26.9)	(33.7)
		NPS	¼	⅜	½	¾	1
		Rated travel	**7.5**	**7.5**	**7.5**	**7.5**	**7.5**
	With Type ... Actuator						
H1	3271/3277		*)	*)	*)	*)	*)
	3379	DIN 11866, Series A	61	61	65	65	70
		DIN 11866, Series B	61	65	65	70	70
		DIN 11866, Series C	–	61	61	65	70
G	3271/3277		*)	*)	*)	*)	*)
	3379	DIN 11866, Series A	83	83	83	83	83
		DIN 11866, Series B	83	83	83	83	83
		DIN 11866, Series C	–	83	83	83	83

*) On request

[1] DN 6 on request

[2] Values in parentheses according to DIN 11866 Series B

Table 29: *Dimensions for valves with welding ends · Standard version (N) and micro-flow valve version (M)*

Valve	DN[1]	8	10	15	20	25	32	40	50	65	80	100
	(OD)[2]	(13.5)	(17.2)	(21.3)	(26.9)	(33.7)	(42.4)	(48.3)	(60.3)	(76.1)	(88.9)	(114.3)
	NPS	¼	⅜	½	¾	1	1¼	1½	2	2½	3	4
DIN 11866, Series A (DIN 11850, Series 2) (DIN EN 10357)	L1 (N)	–	–	70	70	70	100	100	100	100	155	155
	L1 (M)	50	50	50	50	50	–	–	–	–	–	–
	Ød$_i$	8	10	16	20	26	32	38	50	66	81	100
	Ød$_e$	10	13	19	23	29	35	41	53	70	85	104
	e	1	1.5	1.5	1.5	1.5	1.5	1.5	1.5	2	2	2
DIN 11866, Series B	L1 (N)	–	–	70	70	70	100	100	100	100	155	155
	L1 (M)	50	50	50	50	50	–	–	–	–	–	–
	Ød$_i$	10.3	14	18.1	23.7	29.7	38.4	44.3	56.3	72.1	84.3	109.7
	Ød$_e$	13.5	17.2	21.3	26.9	33.7	42.4	48.3	60.3	76.1	88.9	114.3
	e	1.6	1.6	1.6	1.6	2	2	2	2	2	2.3	2.3
DIN 11866, Series C (ASME BPE)	L1 (N)	–	–	70	70	70	–	100	100	100	155	155
	L1 (M)	–	50	50	50	50	–	–	–	–	–	–
	Ød$_i$	–	4.57	9.4	15.75	22.1	–	34.8	47.5	60.2	72.9	97.38
	Ød$_e$	–	12.7	19.05	–	25.4	–	38.1	50.8	63.5	76.2	101.6
	e	–	1.65	1.65	1.65	1.65	–	1.65	1.65	1.65	1.65	2.11
DIN EN ISO 1127, Series 1	L1 (N)	–	–	70	70	70	100	100	100	100	155	155
	L1 (M)	50	50	50	50	50	–	–	–	–	–	–
	Ød$_i$	10.3	14	18.1	23.7	29.7	38.4	44.3	56.3	10.9	83.7	109.1
	Ød$_e$	13.5	17.2	21.3	26.9	33.7	42.4	48.3	60.3	76.1	88.9	114.3
	e	1.6	1.6	1.6	1.6	2	2	2	2	2.6	2.6	2.6

Valve	DN[1]	8	10	15	20	25	32	40	50	65	80	100
	(OD)[2]	(13.5)	(17.2)	(21.3)	(26.9)	(33.7)	(42.4)	(48.3)	(60.3)	(76.1)	(88.9)	(114.3)
	NPS	¼	⅜	½	¾	1	1¼	1½	2	2½	3	4
ISO 2037	L1 (N)	–	–	70	70	70	100	100	100	100	155	155
	L1 (M)	–	50	50	50	50	–	–	–	–	–	–
	Ød$_i$	–	10	15.2	19.3	22.6	31.3	35.6	48.6	60.3	72.9	97.6
	Ød$_e$	–	12.7	17.2	21.3	25	33.7	38	51	63.5	76.1	101.6
	e	–	1	1	1	1.2	1.2	1.2	1.2	1.6	1.6	2
BS 4825 Part 1	L1 (N)	–	–	70	70	70	–	100	100	100	155	155
	L1 (M)	–	–	–	–	50	–	–	–	–	–	–
	Ød$_i$	–	–	13.48	16.65	22.2	–	34.9	47.6	60.3	73	97.6
	Ød$_e$	–	–	15.88	19.05	25.4	–	38.1	50.8	63.5	76.2	101.6
	e	–	–	1.2	1.2	1.6	–	1.6	1.6	1.6	1.6	2
JIS G 3447	L1 (N)	–	–	–	–	70	100	100	100	100	155	155
	L1 (M)	–	–	–	–	50	–	–	–	–	–	–
	Ød$_i$	–	–	–	–	23	29.4	35.7	47.8	59.5	72.3	97.6
	Ød$_e$	–	–	–	–	25.4	31.8	38.1	50.8	63.5	76.3	101.6
	e	–	–	–	–	1.2	1.2	1.2	1.5	2	2	2
JIS G 3459	L1 (N)	–	–	70	70	70	100	100	100	100	155	155
	L1 (M)	50	50	50	50	50	–	–	–	–	–	–
	Ød$_i$	11.4	14.9	18.4	23.9	30.7	39.4	45.3	57.2	72.1	84.9	110.1
	Ød$_e$	13.8	17.3	21.7	27.2	34	42.7	48.6	60.5	76.3	89.1	114.3
	e	1.2	1.2	1.65	1.65	1.65	1.65	1.65	1.65	2.1	2.1	2.1

1) DN 6 on request

2) Values in parentheses according to DIN 11866 Series B

Table 30: *Dimensions for valves with threaded connections · Standard version (N) and micro-flow valve version (M)*

Valve	DN[1]	8	10	15	20	25	32	40	50	65	80	100
	(OD)[2]	(13.5)	(17.2)	(21.3)	(26.9)	(33.7)	(42.4)	(48.3)	(60.3)	(76.1)	(88.9)	(114.3)
	NPS	¼	⅜	½	¾	1	1¼	1½	2	2½	3	4
DIN 11864-1, GS and DIN 11853-1 GS Form A, Series A	L2 (N)	–	–	0	70	70	100	100	100	100	155	155
	L2 (M)	–	50	50	50	50	–	–	–	–	–	–
	Ød$_i$	–	10.05	16.05	20.05	26.05	32.05	38.05	50.05	66.05	81.05	100.05
	Ød$_e$	–	Rd 28x⅛"	Rd 34x⅛"	Rd 44x $^1/_6$"	Rd 52x $^1/_6$"	Rd 58x $^1/_6$"	Rd 65x $^1/_6$"	Rd 78x $^1/_6$"	Rd 95x $^1/_6$"	Rd 110x¼"	Rd 130x¼"
DIN 11864-1, GS and DIN 11853-1 GS Form A, Series B	L2 (N)	–	–	70	70	70	100	100	100	100	155	–
	L2 (M)	–	–	50	50	50	–	–	–	–	–	–
	Ød$_i$	–	–	18.15	23.75	29.75	38.45	44.35	56.35	72.15	84.35	–
	Ød$_e$	–	–	Rd 44x $^1/_6$"	Rd 52x $^1/_6$"	Rd 58x $^1/_6$"	Rd 65x $^1/_6$"	Rd 78x $^1/_6$"	Rd 95x $^1/_6$"	Rd 110x¼"	Rd 130x¼"	–
DIN 11864-1, GS and DIN 11853-1 GS Form A, Series C	L2 (N)	–	–	–	–	70	–	100	100	100	155	–
	L2 (M)	–	–	–	–	50	–	–	–	–	–	–
	Ød$_i$	–	–	–	–	22.15	–	34.85	47.55	60.25	72.95	97.43
	Ød$_e$	–	–	–	–	Rd 52x $^1/_6$"	–	Rd 65x $^1/_6$"	Rd 78x $^1/_6$"	Rd 95x $^1/_6$"	Rd 110x¼"	Rd 130x¼"

Valve	DN[1]	8	10	15	20	25	32	40	50	65	80	100
	(OD)[2]	(13.5)	(17.2)	(21.3)	(26.9)	(33.7)	(42.4)	(48.3)	(60.3)	(76.1)	(88.9)	(114.3)
	NPS	¼	⅜	½	¾	1	1¼	1½	2	2½	3	4
DIN 11851 for pipes according to DIN 11866, Series A	L2 (N)	–	–	70	70	70	100	100	100	100	155	155
	L2 (M)	–	–	–	–	–	–	–	–	–	–	–
	Ød$_i$	–	–	16	20	26	32	38	50	66	81	100
	Ød$_e$	–	–	Rd 34x⅛"	Rd 44x 1/6"	Rd 52x 1/6"	Rd 58x 1/6"	Rd 65x 1/6"	Rd 78x 1/6"	Rd 95x 1/6"	Rd 110x¼"	Rd 130x¼"

1) DN 6 on request

2) Values in parentheses according to DIN 11866 Series B

Table 31: *Dimensions for valves with clamp connections · Standard version (N) and micro-flow valve version (M)*

Valve	DN[1]	8	10	15	20	25	32	40	50	65	80	100
	(OD)[2]	(13.5)	(17.2)	(21.3)	(26.9)	(33.7)	(42.4)	(48.3)	(60.3)	(76.1)	(88.9)	(114.3)
	NPS	¼	⅜	½	¾	1	1¼	1½	2	2½	3	4
DIN 11864-3 NKS and DIN 11853-3 Form A, Series A	L3 (N)	–	–	60.6	60.3	60.3	88.9	88.9	88.9	88.9	150	150
	L3 (M)	–	50	50	50	50	–	–	–	–	–	–
	Ød$_i$	–	10.05	16.05	20.05	26.05	32.05	38.05	50.05	66.05	81.05	100.05
	Ød$_e$	–	34	34	50.5	50.5	50.5	64	77.5	91	106	130
DIN 11864-3 NKS Form A, Series B	L3 (N)	–	–	60.3	60.3	60.3	88.9	88.9	88.9	88.9	150	–
	L3 (M)	–	50	50	50	50	–	–	–	–	–	–
	Ød$_i$	–	14.05	18.15	23.75	29.75	38.45	44.35	56.35	72.15	84.35	–
	Ød$_e$	–	34	34	50.5	50.5	64	64	91	106	119	–
DIN 11864-3 NKS Form A, Series C	L3 (N)	–	–	60.3	60.3	60.3	–	88.9	88.9	88.9	150	150
	L3 (M)	–	–	50	50	50	–	–	–	–	–	–
	Ød$_i$	–	–	9.45	15.8	22.15	–	34.85	47.55	60.25	72.95	97.43
	Ød$_e$	–	–	34	34	50.5	–	64	77.5	91	106	130
DIN 32676, Series A	L3 (N)	–	–	60.3	60.3	60.3	88.9	88.9	88.9	88.9	150	150
	L3 (M)	–	–	–	–	–	–	–	–	–	–	–
	Ød$_i$	–	–	16	20	26	32	38	50	66	81	100
	Ød$_e$	–	–	34	34	50.5	50.5	50.5	64	91	106	119
DIN 32676, Series B	L3 (N)	–	–	60.3	60.3	60.3	88.9	88.9	88.9	88.9	150	150
	L3 (M)	–	–	–	–	–	–	–	–	–	–	–
	Ød$_i$	–	–	18.1	23.7	29.7	38.4	44.3	56.3	72.1	84.3	109.7
	Ød$_e$	–	–	50.5	50.5	50.5	64	64	77.5	91	106	130
DIN 32676, Series C	L3 (N)	–	–	60.3	60.3	60.3	–	88.9	88.9	88.9	150	150
	L3 (M)	–	–	–	–	–	–	–	–	–	–	–
	Ød$_i$	–	–	9.4	15.75	22.1	–	34.8	47.5	60.2	72.9	97.38
	Ød$_e$	–	–	25	25	50.5	–	50.5	64	77.5	91	119
BS 4825 Part 3	L3 (N)	–	–	–	–	60.3	–	88.9	88.9	88.9	150	150
	L3 (M)	–	–	–	–	–	–	–	–	–	–	–
	Ød$_i$	–	–	–	–	22.2	–	34.9	47.6	60.3	73	97.6
	Ød$_e$	–	–	–	–	50.5	–	50.5	64	77.5	91	119
ASME BPE	L3 (N)	–	–	60.3	60.3	60.3	–	88.9	88.9	88.9	150	150
	L3 (M)	–	–	–	–	–	–	–	–	–	–	–
	Ød$_i$	–	–	15.75	–	22.1	–	34.8	47.5	60.2	72.9	97.38
	Ød$_e$	–	–	25	25	50.5	–	50.5	64	77.5	91	119
OSS for JIS G 3447	L3 (N)	–	–	–	–	60.3	88.9	88.9	88.9	88.9	150	150
	L3 (M)	–	–	–	–	–	–	–	–	–	–	–
	Ød$_i$	–	–	–	–	23	29.4	35.7	47.8	59.5	85.1	97.6
	Ød$_e$	–	–	–	–	50.5	50.5	50.5	64	77.5	91	119

Valve	DN[1]	8	10	15	20	25	32	40	50	65	80	100
	(OD)[2]	(13.5)	(17.2)	(21.3)	(26.9)	(33.7)	(42.4)	(48.3)	(60.3)	(76.1)	(88.9)	(114.3)
	NPS	¼	⅜	½	¾	1	1¼	1½	2	2½	3	4
OSS for JIS G 3459	L3 (N)	–	–	–	–	60.3	88.9	88.9	88.9	88.9	150	150
	L3 (M)	–	–	–	–	–	–	–	–	–	–	–
	Ød$_i$	–	–	–	–	30.7	39.4	45.3	57.2	72.1	84.9	97.4
	Ød$_e$	–	–	–	–	50.5	50.5	50.5	64	77.5	91	119

1) DN 6 on request

2) Values in parentheses according to DIN 11866 Series B

Table 32: *Dimensions for valves with flanges · Standard version (N) and micro-flow valve version (M)*

Valve	DN[1]	8	10	15	20	25	32	40	50	65	80	100
	(OD)[2]	(13.5)	(17.2)	(21.3)	(26.9)	(33.7)	(42.4)	(48.3)	(60.3)	(76.1)	(88.9)	(114.3)
	NPS	¼	⅜	½	¾	1	1¼	1½	2	2½	3	4
DIN 11864-2 NF and DIN 11853-2 NF Form A, Series A	L4 (N)	–	–	90	95	100	105	115	125	145	155	175
	L4 (M)	–	90	90	95	100	–	–	–	–	–	–
	Ød$_i$	–	10.05	16.05	20.05	26.05	32.05	38.05	50.05	66.05	81.05	100.05
	Ød$_e$	–	54	59	64	70	76	82	94	113	133	159
DIN 11864-2 NF and DIN 11853-2 NF Form A, Series B	L4 (N)	–	–	90	95	100	105	115	125	145	155	175
	L4 (M)	–	–	95	95	100	–	–	–	–	–	–
	Ød$_i$	–	–	18.15	23.75	29.75	38.45	44.35	56.35	71.15	84.35	109.75
	Ød$_e$	–	–	62	69	74	82	88	103	125	137	168
DIN 11864-2 NF and DIN 11853-2 NF Form A, Series C	L4 (N)	–	–	100	100	100	–	115	125	145	155	175
	L4 (M)	–	–	–	–	100	–	–	–	–	–	–
	Ød$_i$	–	–	9.45	15.8	22.15	–	34.85	47.55	60.25	72.95	97.43
	Ød$_e$	–	–	54	59	66	–	79	92	107	125	157
PN 40: DIN EN 1092-1 B2	L4 (N)	–	–	90	95	100	105	115	125	145	155	175
	L4 (M)	–	–	–	–	–	–	–	–	–	–	–
	Ød$_i$	–	–	16.05	20.05	26.05	32.05	38.05	50.05	66.05	81.05	100.05
	Ød$_e$	–	–	95	105	115	140	150	165	185	200	220
Class 150: ASME B16.5	L4 (N)	–	–	90	95	100	–	115	125	145	155	175
	L4 (M)	–	–	–	–	–	–	–	–	–	–	–
	Ød$_i$	–	–	–	–	–	–	–	–	–	–	–
	Ød$_e$	–	–	–	–	–	–	–	–	–	–	–

1) DN 6 on request

2) Values in parentheses according to DIN 11866 Series B

Table 33: *Further dimensions[1] in combination with Type 3271 Pneumatic Actuator or Type 3277 Pneumatic Actuator*

Actuator area		cm²	120	175v2	350	350v2	355v2	750v2
Diaphragm ØD		mm	168	215	280	280	280	394
H[2]	Type 3271	mm	69	78	82	92	131	236
H[2]	Type 3277	mm	69	78	82	82	121	236
H3[3]		mm	110	110	110	110	110	190
H5	Type 3277	mm	88	101	101	101	101	101
Thread	Type 3271		M30x1.5 (M20x1.5)[5]	M30x1.5 (M20x1.5)[5]	M30x1.5	M30x1.5	M30x1.5	M30x1.5
Thread	Type 3277		M30x1.5 (M20x1.5)[5]	M30x1.5 (M20x1.5)[5]	M30x1.5	M30x1.5	M30x1.5	M30x1.5

Actuator area		cm²	120	175v2	350	350v2	355v2	750v2
a	Type 3271		G ⅛ (⅛ NPT)	G ¼ (¼ NPT)	G ⅜ (⅜ NPT)	G ⅜ (⅜ NPT)	G ⅜ (⅜ NPT)	G ⅜ (⅜ NPT)
a2	Type 3277		–	G ⅜[4)]	G ⅜[4)]	G ⅜[4)]	G ⅜[4)]	G ⅜[4)]

1) The specified dimensions are theoretical maximum design values for a specific standard device configuration. They do not reflect every possible case of use. The actual values for individual devices may differ depending on the device configuration and the specific application.

2) Height including lifting eyelet or female thread and eyebolt according to DIN 580. Height of the swivel hoist may differ. Actuators up to 355v2 cm² without lifting eyelet or female thread.

3) Minimum clearance required to remove the actuator

4) An adapter G ⅜ to ⅜ NPT is available for the a2 connection. It can be ordered separately using the following article number: 100160362

5) Version with connections for micro-flow valve

Table 34: *Type 3379 Pneumatic Actuator · Dimensions in mm · Weights in kg*

Actuator		Without positioner		With Type 3724 Positioner	
Actuator area	**cm²**	**31**	**63**	**31**	**63**
Actuator diameter ØD2		69	96	107	107
Height H		195	195	285	285
Height H3[1)]		150	150	150	150
Length A2		20	20	30	30
Weight, approx.		1.8	3.1	3.2	4.4

1) Minimum clearance required to remove the actuator

Weights

Table 35: *Type 3349 Control Valve · Standard version · Weights in kg*

Valve	DN	15	20	25	32	40	50	65	80	100
	(OD)[1)]	(21.3)	(26.9)	(33.7)	(42.4)	(48.3)	(60.3)	(76.1)	(88.9)	(114.3)
	NPS	½	¾	1	1¼	1½	2	2½	3	4
For Type ... Actuator										
Valve weight **without actuator** DIN 11866, Series A	Seat bore (SB)	6/12	6/12	6/12/24	31	31/38	31/38/48	31/38/48/63	38/48/63/80	63/80/100
	3271/3277	5	5	5	12	12	14	14	38	44
	3379	3	3	3	11	11	11	–	–	–

1) Values in parentheses according to DIN 11866 Series B

Table 36: *Type 3349 Control Valve · Micro-flow valve version · Weights in kg*

Valve		DN[1]	8	10	15	20	25
		(OD)[2]	(13.5)	(17.2)	(21.3)	(26.9)	(33.7)
		NPS	¼	⅜	½	¾	1
	For Type ... Actuator						
Valve weight **without actuator** DIN 11866, Series A	3271/3277		*)	*)	*)	*)	*)
	3379	DIN 11866, Series A	1	1	1	1	1
		DIN 11866 Series B	1	1	1	1	1
		DIN 11866, Series C	1	1	1	1	1

*) On request

1) DN 6 on request

2) Values in parentheses according to DIN 11866 Series B

Table 37: *Weights[1] for Type 3271 and Type 3277 Pneumatic Actuators*

Type ... Actuator	Actuator area in cm²		120	175v2	350	350v2	355v2	750v2
3271	Without handwheel	kg	2.5	6	8	11.5	15	36
3271	With handwheel	kg	4	10	13	16.5	20	41
3277	Without handwheel	kg	3.2	10	12	15	19	40
3277	With handwheel	kg	4.5	14	17	20	24	45

1) The weights specified apply to a specific standard device configuration. Weights of other actuator configurations may differ depending on the version (material, number of actuator springs etc.).

Ordering text

The following specifications are required on ordering:

Control valve for aseptic service	Type 3349 with USP-VI diaphragm
Body version	Standard version or micro-flow valve version
Nominal size	DN .../NPS .../OD ...
K_{VS}/C_V coefficient	...
Plug seal	Metal or soft seated
Type of end connections	Welding ends, threaded connections, clamp connections or flanges
Characteristic	Equal percentage or linear
Actuator	Type 3271, Type 3277 or Type 3379
Actuator area	... cm^2
Travel	... mm
Fail-safe action	Fail-close or fail-open
Bench range	