TI01253G/00/EN/07.23-00
71631997
2023-11-01

Technical Information
Micropilot NMR84

Tank Gauging



Application

Micropilot NMR8x Series intelligent tank gauges are designed for high accuracy liquid level measurement in storage and process applications. They fulfill the exacting demands of tank inventory management, inventory control, custody transfer, loss control, total cost saving, and safe operation.

Typical areas of application

- Precise level measurement of oil (fuels), chemicals, and alcohol in stilling wells
- Tank mounted intelligence makes NMR8x ideal for single or multi-task installations, measuring the liquid level and integrating a wide range of tank sensor measurement functions including: Liquid level, Water level, Temperature and Pressure.

Your benefits

- SIL2/3 certified as per IEC 61508 (Minimum, Maximum, Continuous level)
- Measures liquid level to an accuracy of +/- 0.5 mm (0.02 in) and integrates temperature, water level, pressure, overfill prevention sensor
- Robust IP66/68, NEMA Type 4x/6P enclosure, stainless steel or aluminum and with 4”DN100 to 12”DN300 antennas
- Wide range of output signals including V1, Modbus RS 485, and HART protocol
- Suitable for atmospheric and high pressure applications up to 25 bar/2.5 MPa/ 362 psi

Endress+Hauser
People for Process Automation

Table of contents

Document information 3
Symbols 3

Function and system design 5
Measuring principle 5
Integration of tank sensors 6
Measuring system 6

Input/output 8
Level measurement 8
HART Ex ia/IS active input 9
I/O modules 10

Power supply 19
Terminal assignment 19
Supply voltage 20
Power consumption 20
Cable entries 21
Cable specification 21
Overvoltage protection 22
Overvoltage category 22
Pollution degree 22

Performance characteristics 23
Sampling rate 23
Reference operating conditions 23
Measured value resolution 23
Maximum measured error 23
Hysteresis 23
Repeatability 23
Linearity 23
Long-term drift 23
Influence of ambient temperature 23

Installation 24
Installation conditions 24

Environment 25
Ambient temperature range 25
Ambient temperature limits 25
Classification of environmental conditions according to DIN EN 60721-3-4 26
Storage temperature 26
Humidity 26
Degree of protection 26
Shock resistance 26
Vibration resistance 26
Electromagnetic compatibility (EMC) 26
Maximum use altitude 26

Process 27
Process temperature range 27
Process pressure range 27
Dielectric constant 27

Custody transfer approval 28

Mechanical construction 29
Dimensions 29
Weight 34
Materials 34

Operability 37
Operating concept 37
Operating options 37
Local operation 37
Remote operation 38
Operation via service interface 39

Certificates and approvals 40
CE mark 40
RCM marking 40
Ex approval 40
Single seal according to ANSI/ISA 12.27.01 40
Functional Safety (SIL) 40
WHG 40
Weight & Measure approval 40
Radio standard EN302372-1/2 41
FCC / Industry Canada 41
Non-ionizing radiation protection 41
CRN approval 41
Pressure equipment with permitted pressure ≤ 200 bar (2 900 psi) 41
Test, certificate 42
Other standards and guidelines 42

Ordering information 43
Ordering information 43
Calibration certificate 43
Marking 43

Application packages 44
Advanced tank measurement methods 44

Accessories 51
Device-specific accessories 51
Communication-specific accessories 52
Service-specific accessories 52
System components 52

Documentation 53
Technical Information (TI) 53
Brief Operating Instructions (KA) 53
Operating Instructions (BA) 53
Description of Device Parameters (GP) 53
Safety Instructions (XA) 53
Installation instructions (EA) 53

Registered trademarks 53

Document information

Symbols

Safety symbols

DANGER
This symbol alerts you to a dangerous situation. Failure to avoid this situation will result in serious or fatal injury.

WARNING
This symbol alerts you to a dangerous situation. Failure to avoid this situation can result in serious or fatal injury.

CAUTION
This symbol alerts you to a dangerous situation. Failure to avoid this situation can result in minor or medium injury.

NOTICE
This symbol contains information on procedures and other facts which do not result in personal injury.

Electrical symbols

Alternating current

Direct current and alternating current

Direct current

Ground connection

A grounded terminal which, as far as the operator is concerned, is grounded via a grounding system.

Protective earth (PE)

Ground terminals that must be connected to ground prior to establishing any other connections.

The ground terminals are located on the interior and exterior of the device:
- Interior ground terminal: protective earth is connected to the mains supply.
- Exterior ground terminal: device is connected to the plant grounding system.

Tool symbols

Phillips head screwdriver

Flat blade screwdriver

Torx screwdriver

Allen key

Open-ended wrench

Symbols for certain types of information and graphics

Permitted
Procedures, processes or actions that are permitted

Preferred
Procedures, processes or actions that are preferred

Forbidden
Procedures, processes or actions that are forbidden

Tip
Indicates additional information

Reference to documentation

Reference to graphic

▶
Notice or individual step to be observed

1., 2., 3.
Series of steps

Result of a step

Visual inspection

Operation via operating tool

Write-protected parameter

1, 2, 3, ...
Item numbers

A, B, C, ...
Views

⚠ → **Safety instructions**
Observe the safety instructions contained in the associated Operating Instructions

Temperature resistance of the connection cables
Specifies the minimum value of the temperature resistance of the connection cables

Function and system design

Measuring principle

Micropilot is a directional level radar, operating based on the "Frequency-Modulated Continuous Wave" principle (FMCW). The radar emits a precise crystal-oscillated, continuously varying frequency wave from the antenna. The wave is reflected off the product surface and received again by the radar system.

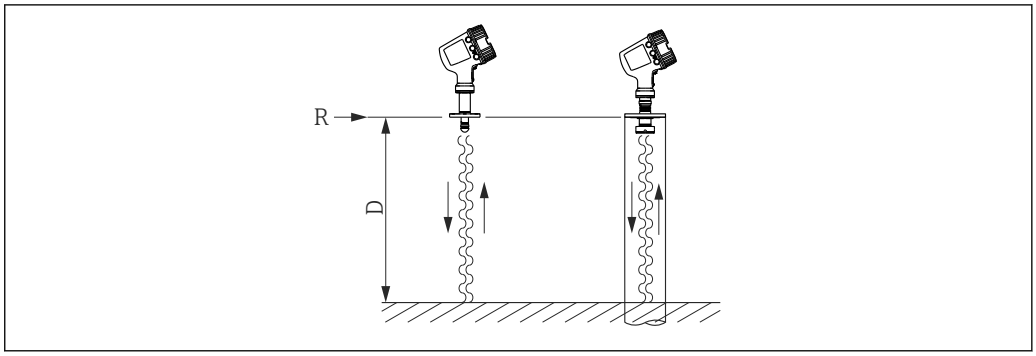

1 *FMCW principle: Emission and reflection of the continuous wave.*

R Reference point of the measurement
D Distance between R and the product surface

The frequency of this wave is precisely modulated in the form of a sawtooth signal between two limit frequencies f_1 and f_2:

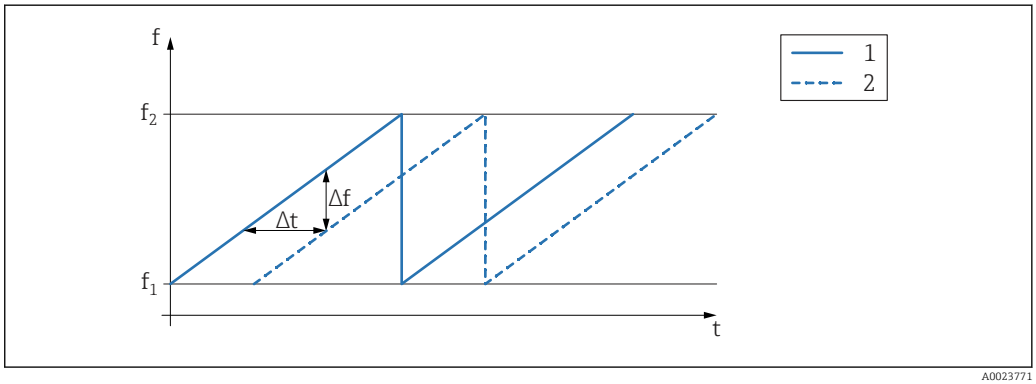

2 *FMCW principle: Results of the frequency modulation*

1 Emitted signal
2 Received signal

Thus, at any given time the frequencies of the emitted and the received signal differ by

$\Delta f = k \Delta t$

where Δt is the transit time and k is the known slope of the frequency modulation.

Δt, on the other hand, is determined by the distance D between the reference point R and the product surface:

$D = (c \Delta t) / 2$

where c is the speed of propagation of the wave.

In summary, D can be calculated from the measured frequency shift Δf. D is then used to calculate the contents of the tank.

Integration of tank sensors

In addition to measuring the level, the device can also be used for the integration of tank sensors into tank inventory systems. All measured and calculated values can be displayed at the built-in display. Via a field communication protocol, they can be transferred to an inventory control system.

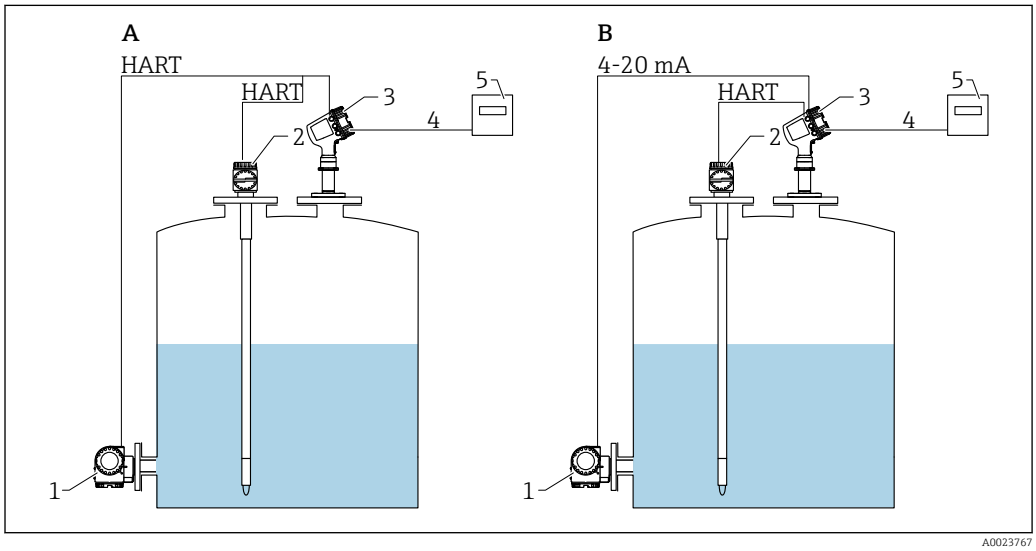

3 Integration of tank sensors with Micropilot (Example)

A HART multidrop mode
B HART and analog mode
1 Pressure transmitter
2 Average temperature transmitter
3 Micropilot
4 Field protocol transmits data to an inventory control system
5 Inventory control system (e.g. Tankvision NXA820 or Tankvision Professional NXA85)

Measuring system

- From single tank level measurement to the largest oil refinery applications, Endress+Hauser tank gauging devices are an integral part of tank farm management solutions. A wide variety of data output protocols are available for seamless integration into many commonly used systems.
- A primary example is Tankvision from Endress+Hauser. Tankvision is a scalable system offering local tank management for multiple loops via Modbus or V1 protocols. Accumulated data is available to DCS and other plant management systems via a Host Link.

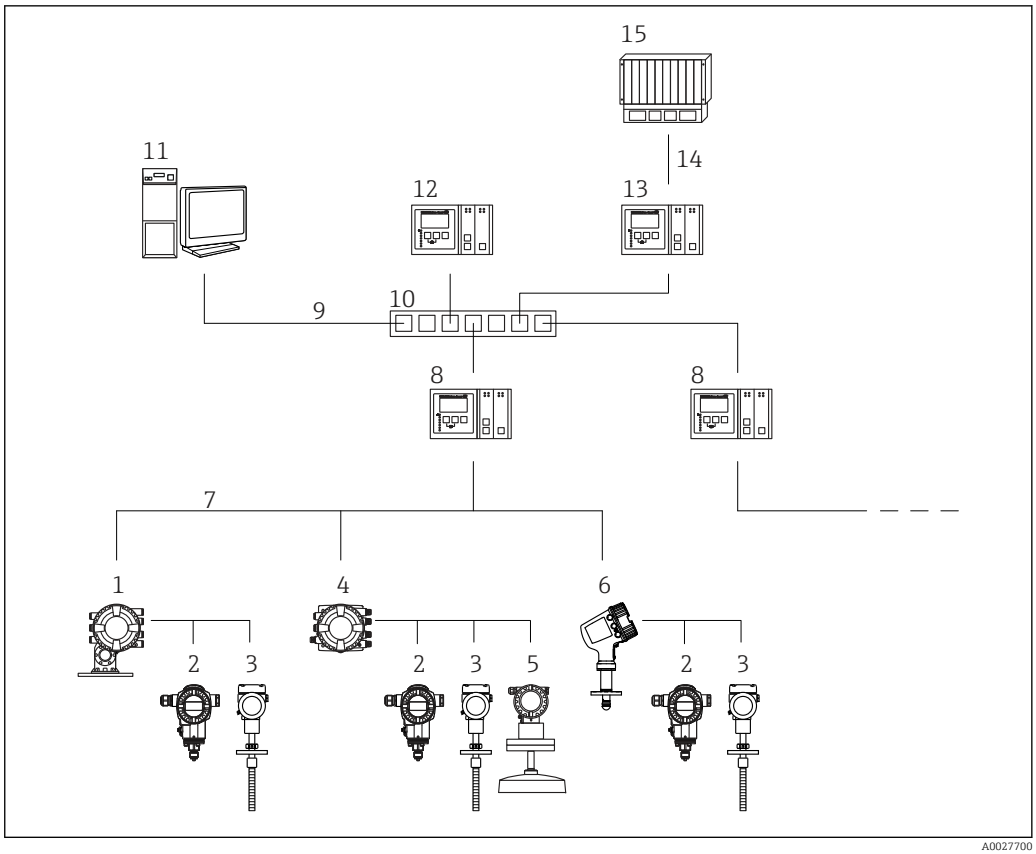

4 *Integration of tank gauging devices into an inventory management system (typical example)*

1 Proservo NMS8x
2 Pressure transmitter (e.g. Cerabar)
3 Temperature transmitter (e.g. Prothermo)
4 Tankside Monitor NRF81
5 Micropilot S FMR5xx
6 Micropilot NMR8x
7 Field protocol (e.g. Modbus, V1)
8 Tankvision Tank Scanner NXA820
9 Ethernet
10 Ethernet switch
11 Internet Browser
12 Tankvision Data Concentrator NXA821
13 Tankvision Host Link NXA822
14 Modbus
15 DCS or PLC

Input/output

Level measurement

Measured variable

The measured variable is the distance between a reference point (mounting flange) and a reflective surface (e.g. product surface).

Maximum measuring range

0.8 to 20 m (2.6 to 66 ft)
Antenna: Planar 100 mm/4"
Option of ordering feature 100: "Antenna":
BD

0.8 to 50 m (2.6 to 164 ft)
- Antenna: Planar 150 mm/6"
  Option of ordering feature 100: "Antenna":
  BF
- Antenna: Planar 200 mm/8"
  Option of ordering feature 100: "Antenna":
  BG
- Antenna: Planar 250 mm/10"
  Option of ordering feature 100: "Antenna":
  BH
- Antenna: Planar 300 mm/12"
  Option of ordering feature 100: "Antenna":
  BJ

For devices with custody calibration (10 points) with option ITA or ITC of ordering feature 150 "Accuracy, Weight + Measure Approval": Maximum measuring range: 30 m (98 ft)

For devices with custody calibration (10 points) with the extended range option ITB or ITD of ordering feature 150 "Accuracy, Weight + Measure Approval": Maximum measuring range: 50 m (164 ft)

Operating frequency

D [1]	O [2]
NMR84	approx. 6 GHz

1) Device
2) Operating frequency

Transmitting power

D [1]	P1 [2]	P2 [3]	A [4]
NMR84	1.4 mW		21 µW

1) Device
2) Generated Peak Pulse Power
3) Radiated Peak Pulse Power
4) Average output power

HART Ex ia/IS active input

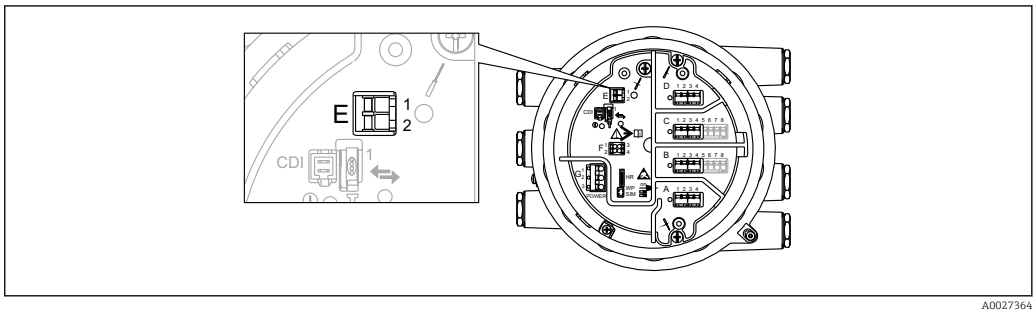

A0027364

5 *HART Ex ia/IS active input*

E1 HART +
E2 HART -

The device has a HART Ex ia/IS active input. Additional features are provided if the following Endress+Hauser devices are connected:

Prothermo NMT

The measured level is transmitted to the Prothermo. Prothermo uses this level to calculate the average temperature of the product.

Technical data

- Transmitter power supply voltage
  23.0 V - 380 Ω · I_{load}
- Maximum load
  500 Ω including signal line
- Maximum current of all connected devices
  24 mA

The HART Ex ia/IS active input is available by default. It needs not to be chosen explicitly when ordering a device.

I/O modules

Overview

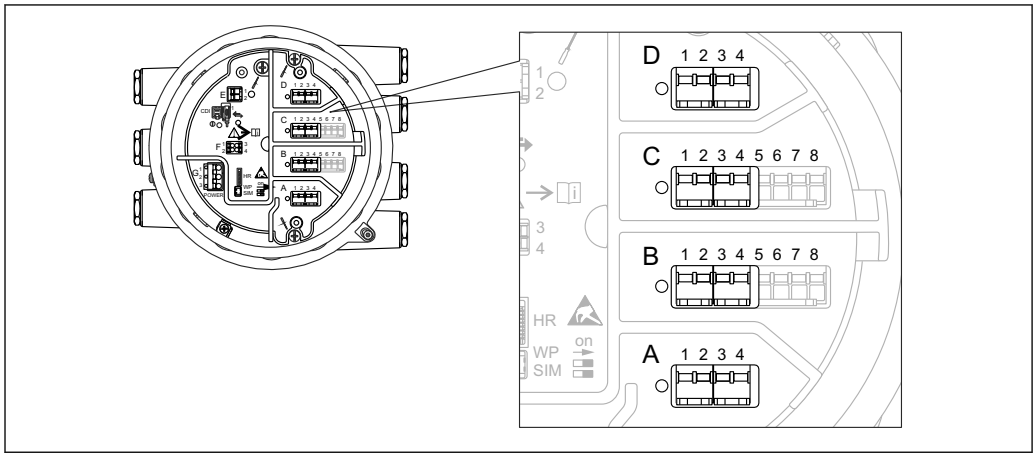

6 Position of the I/O modules in the terminal compartment

The terminal compartment contains up to four I/O modules, depending on the order code.

- Modules with four terminals can be in any of these slots.
- Modules with eight terminals can be in slot B or C.

The exact assignment of the modules to the slots is dependent on the device version. For a detailed description refer to the Operating Instructions of the device in question.

The following restrictions apply when selecting the modules:
- The device may contain a maximum of four I/O modules.
- A maximum of two I/O modules with 8 terminals is possible.

Ordering feature 040: "Primary Output"

NMx8x - xxxx XX xx xx ...
040

O [1]	N [2]	T [3]	S [4]
Modbus RS485 [5]			
A1	1	4	→ 13
V1 [5]			
B1	1	4	→ 14
4-20mA HART Ex d/XP [5]			
E1	1	8	→ 16
4-20mA HART Ex i/IS [5]			
H1	1	8	→ 16
WM550 [5]			
C1	1	4	→ 15

1) Option
2) Number of I/O modules
3) Number of terminals
4) Technical data
5) Type of I/O module

Ordering feature 050: "Secondary I/O Analogue"

NMx8x - xxxx xx XX xx ...
050

Ordering feature 050: "Secondary I/O Analogue"

- Type of I/O module:
  1 x "Ex d/XP 4-20mA HART + RTD input"
  - Option
    A1
  - Number of I/O modules
    1
  - Number of terminals
    1 x 8
  - Technical data → 16
- Type of I/O module:
  2 x "Ex d/XP 4-20mA HART + RTD input"
  - Option
    A2
  - Number of I/O modules
    2
  - Number of terminals
    2 x 8
  - Technical data → 16
- Type of I/O module:
  1 x "Ex i/IS 4-20mA HART+ RTD input"
  - Option
    B1
  - Number of I/O modules
    1
  - Number of terminals
    1 x 8
  - Technical data → 16
- Type of I/O module:
  2 x "Ex i/IS 4-20mA HART+ RTD input"
  - Option
    B2
  - Number of I/O modules
    2
  - Number of terminals
    2 x 8
  - Technical data → 16
- Type of I/O module:
  1 x "Ex i/IS 4-20mA HART + RTD input"
  1 x "Ex d/XP 4-20mA HART + RTD input"
  - Option
    C2
  - Number of I/O modules
    2
  - Number of terminals
    2 x 8
  - Technical data → 16
- Type of I/O module:
  none
  - Option
    X0
  - Number of I/O modules
    0
  - Number of terminals
    0
  - Technical data -

Ordering feature 060: "Secondary I/O Digital Ex d/XP"

NMx8x - xxxx xx xx XX ... (060)

Ordering feature 060: "Secondary I/O Digital Ex d/XP"

- Type of I/O module:
  1 x "2x relay + 2x discrete I/O"
  - Option
    A1
  - Number of I/O modules
    1
  - Number of terminals
    1 x 4
  - Technical data → 18
- Type of I/O module:
  2 x "2x relay + 2x discrete I/O"
  - Option
    A2
  - Number of I/O modules
    2
  - Number of terminals
    2 x 4
  - Technical data → 18
- Type of I/O module:
  3 x "2x relay + 2x discrete I/O"
  - Option
    A3
  - Number of I/O modules
    3
  - Number of terminals
    3 x 4
  - Technical data → 18
- Type of I/O module:
  1x "Modbus RS485"
  - Option
    B1
  - Number of I/O modules
    1
  - Number of terminals
    3 x 4
  - Technical data → 13
- Type of I/O module:
  1x "Modbus RS485"
  1 x "2x relay + 2x discrete I/O"
  - Option
    B2
  - Number of I/O modules
    2
  - Number of terminals
    2 x 4
  - Technical data
    → 13
    → 18
- Type of I/O module:
  1x "Modbus RS485"
  2 x "2x relay + 2x discrete I/O"
  - Option
    B3
  - Number of I/O modules
    3
  - Number of terminals
    3 x 4
  - Technical data
    → 13
    → 18

- Type of I/O module:
  1 x "WM550"
  - Option
    E1
  - Number of I/O modules
    1
  - Number of terminals
    1 x 4
  - Technical data → 15
- Type of I/O module:
  1 x "WM550"
  1 x "2x relay + 2x discrete I/O"
  - Option
    E2
  - Number of I/O modules
    2
  - Number of terminals
    2 x 4
  - Technical data → 15
- Type of I/O module:
  1 x "WM550"
  2 x "2x relay + 2x discrete I/O"
  - Option
    E3
  - Number of I/O modules
    3
  - Number of terminals
    3 x 4
  - Technical data → 15
- Type of I/O module:
  none
  - Option
    X0
  - Number of I/O modules
    0
  - Number of terminals
    0
  - Technical data -

"Modbus RS485": Technical data

Number of units
Maximum 15 instruments per loop

Baud rate: Selectable
- 600 bit/s
- 1 200 bit/s
- 2 400 bit/s
- 4 800 bit/s
- 9 600 bit/s
- 19 200 bit/s

Parity: Selectable
- Odd
- Even
- None

Cable
3-wire, with screening

The screening must be connected inside the housing

Termination resistors
To be set as required in specific environments

Topology
Serial bus

Transmission distance
Maximum 1 200 m (3 900 ft)

Instrument address
Each transmitter has an individual bus address configured in the software of the transmitter

Isolation
Bus inputs are electrically isolated from the other electronics

Error on alarm
Error message classified according to NAMUR NE 107

"V1": Technical data

Number of units
Maximum 10 instruments per loop

Baud rate: Selectable
3 300 bit/s

Cable
- 2-wire twisted pair, screening recommended
- 2-wire, unscreened

Termination resistors
Not required

Topology
- Serial bus
- Tree structure

Transmission distance
Maximum 6 000 m (19 700 ft)

Instrument address
Each transmitter has an individual bus address configured in the software of the transmitter

Isolation
Serial communication circuit isolated from other circuits

Error on alarm
Error message classified according to NAMUR NE 107

WM550: Technical data

Number of units
Maximum 15 [1] instruments per loop

Baud rate: Selectable
- 600 bit/s
- 1 200 bit/s
- 2 400 bit/s
- 4 800 bit/s

Cable
- 2-wire twisted pair, unscreened (recommended)
- 2-wire, screened or unscreened

Topology
Current loop or 2 redundant current loops (requires 2 I/O modules WM550)

Transmission distance
Maximum 7 000 m (22 967 ft)

Instrument address
Each transmitter has an individual bus address configured in the software of the transmitter

Isolation
Serial communication circuit isolated from other circuits

Error on alarm
Error message classified according to NAMUR NE 107

1) The maximum number of devices depends on the maximum output voltage of the master and the voltage drop of slaves. For NXA820 with Nxx8x devices, a maximum number of 12 devices is guaranteed

"4-20mA HART" I/O module (Ex d/XP or Ex i/IS): Technical data

General data
Number of units
Maximum 6 instruments per loop

Baud rate: Selectable
1 200 bit/s

Cable
- 2-wire twisted pair, screened
- Core cross section: 0.2 to 2.5 mm^2 (24 to 13 AWG)

Topology
- Serial bus
- Tree structure

Transmission distance
Maximum 1 200 m (3 900 ft)

Instrument address
Each transmitter on a signal loop has an individual bus address. This is defined within the transmitter software and / or auxiliary configuration environment such as host system or Field Communicator 475.

Isolation
Bus inputs are electrically isolated from the other electronics

Input data
Input operating modes
- 4..20mA input (1 external device)
- HART master+4..20mA input (1 external device)
- HART master (up to 6 external devices)

Internal load (to ground)
400 Ω

Measuring range
0 to 26 mA

Accuracy
±15 µA (after linearization and calibration)

Connection of a Prothermo NMT
The measured level is transmitted to the Prothermo. Prothermo uses this level to calculate the average temperature of the product.

Connection of a RTD temperature probe
2-, 3- or 4-wire connection

Output data
Output operating modes
- 4..20mA output
- HART slave +4..20mA output

Output current
3 to 24 mA

Accuracy
±15 µA (after linearization and calibration)

Error on alarm
HART error message classified according to NAMUR NE 107

Data for passive usage (input or output)
- Minimum terminal voltage
  10.4 V [2)]
- Maximum terminal voltage
  29 V [2)]

2) Observing these values is mandatory in order to ensure correct measured value information.

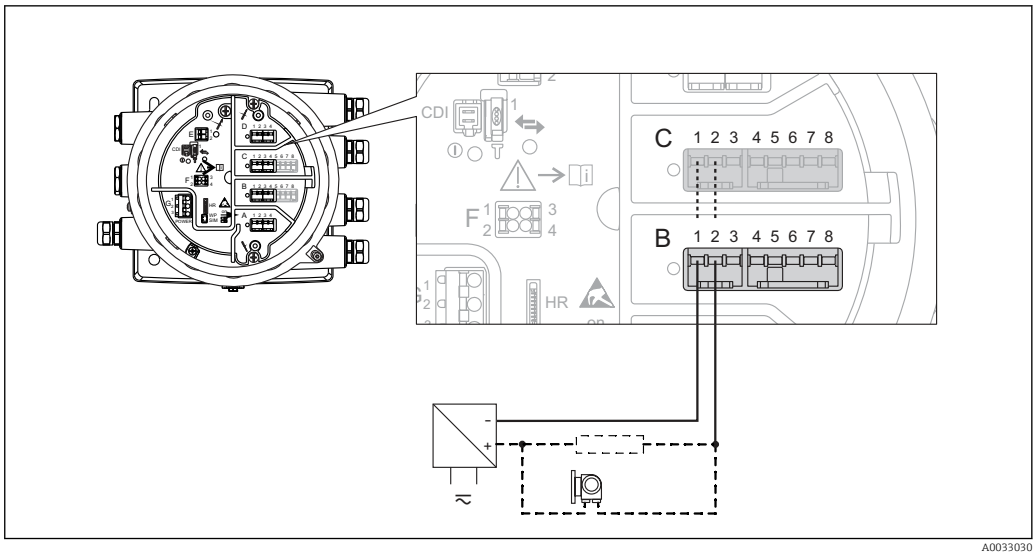

7 Passive input or output: Use terminals 1 and 2

Data for active usage (input or output)

- Transmitter power supply voltage
  (Ex d/XP)
  18.5 V - 360 Ω · I_{load}
- Transmitter power supply voltage
  (Ex i/IS)
  20.0 V - 360 Ω · I_{load}
- Output load
  max. 500 Ω including signal line [3)]

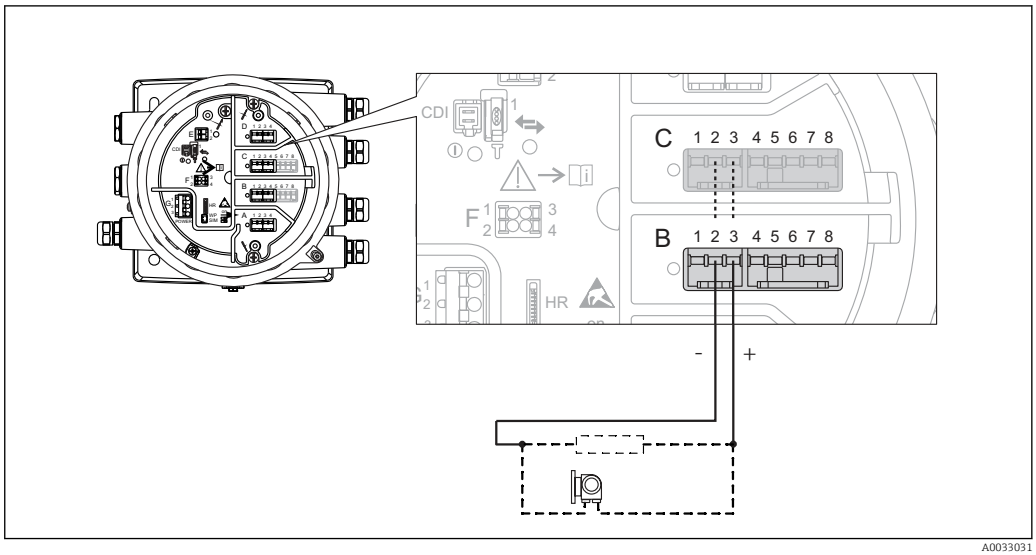

8 Active input or output: Use terminals 2 and 3

3) Observing this value is mandatory in order to ensure correct measured value information.

"Digital I/O module": Technical data

Output
- Relay switching power for resistive load
  - 30 V_{DC} @ 2 A
  - 250 V_{DC} @ 0.1 A
  - 250 V_{AC} @ 2 A
- Relay type
  - normally open;
  - can be set to "normally closed" by a software option [4)]

Input
- Maximum pick-up voltage
  - 250 V_{AC}
  - 250 V_{DC}
- Minimum pick-up voltage
  - 25 V_{AC}
  - 5 V_{DC}
- Current consumption at maximum voltage
  - ≤ 1 mA (DC)
  - ≤ 2 mA (AC)

4) In case of a power supply failure, the switching state is always "open", irrespective of the selected software option.

Power supply

Terminal assignment

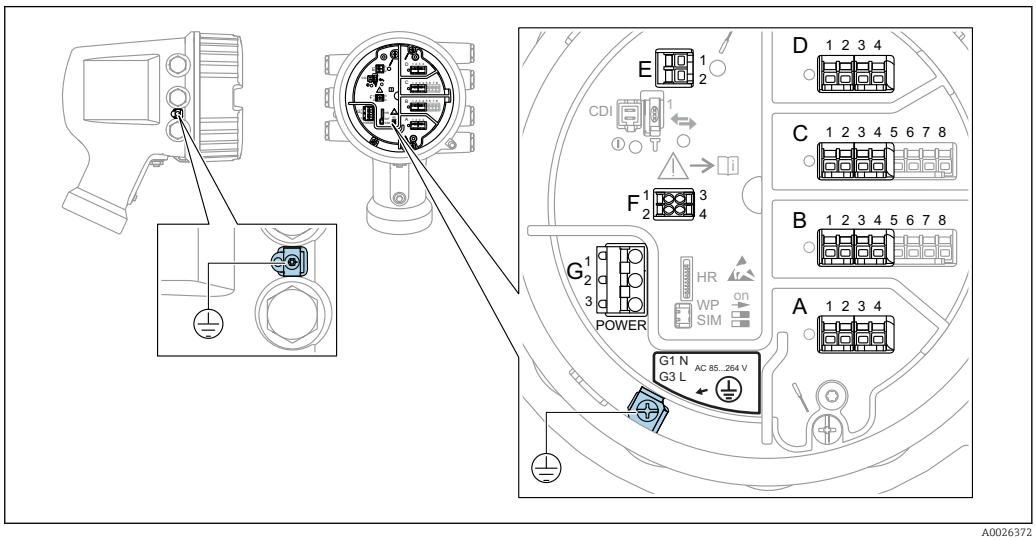

9 *Terminal compartment (typical example) and ground terminals*

Housing thread
The threads of the electronics and connection compartment can be coated with an anti-friction coating.
The following applies for all housing materials:
Do not lubricate the housing threads.

Terminal area A/B/C/D (slots for I/O modules)
Module: Up to four I/O modules, depending on the order code
- Modules with four terminals can be in any of these slots.
- Modules with eight terminals can be in slot B or C.

The exact assignment of the modules to the slots is dependent on the device version. For a detailed description refer to the Operating Instructions of the device in question.

Terminal area E
Module: HART Ex i/IS interface
- E1: H+
- E2: H-

Terminal area F
Remote display
- F1: V_{CC} (connect to terminal 81 of the remote display)
- F2: Signal B (connect to terminal 84 of the remote display)
- F3: Signal A (connect to terminal 83 of the remote display)
- F4: Gnd (connect to terminal 82 of the remote display)

Terminal area G (for High voltage AC power supply and Low voltage AC power supply)
- G1: N
- G2: not connected
- G3: L

Terminal area G (for Low voltage DC power supply)
- G1: L-
- G2: not connected
- G3: L+

Terminal area: Protective ground
Module: Protective ground connection (M4 screw)

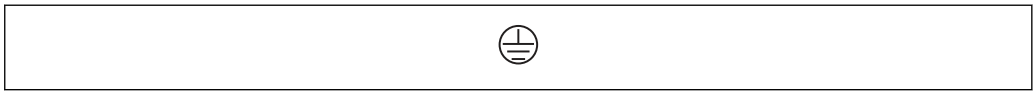

10 *Terminal area: Protective ground*

Remote display and operating module DKX001

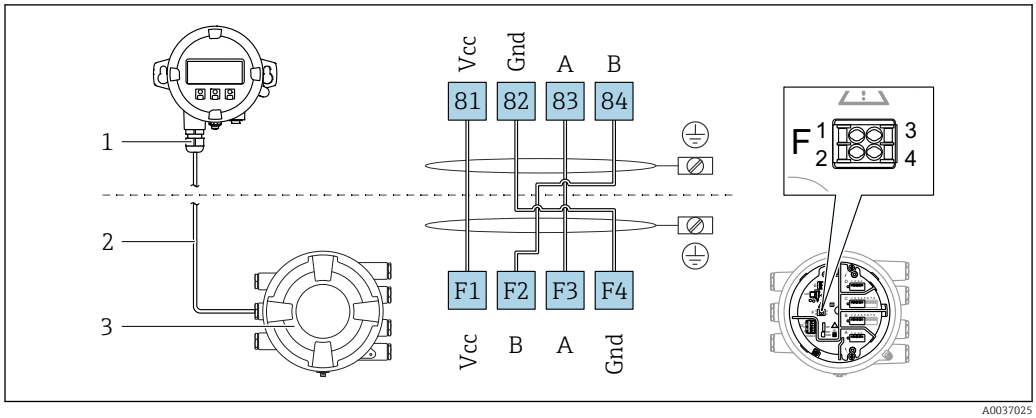

11 Connection of the remote display and operating module DKX001 to the Tank Gauging device (NMR8x, NMS8x or NRF8x)

1 Remote display and operating module
2 Connecting cable
3 Tank Gauging device (NMR8x, NMS8x or NRF8x)

The remote display and operating module DKX001 is available as an accessory. For details refer to SD01763D.

- The measured value is indicated on the DKX001 and on the local display and operating module simultaneously.
- The operating menu cannot be accessed on both modules at the same time. If the operating menu is entered in one of these modules, the other module is automatically locked. This locking remains active until the menu is closed in the first module (back to measured value display).

Supply voltage

High voltage AC power supply:
Operational value:
100 to 240 V_{AC} (- 15 % + 10 %) = 85 to 264 V_{AC} , 50/60 Hz

Low voltage AC power supply:
Operational value:
65 V_{AC} (- 20 % + 15 %) = 52 to 75 V_{AC} , 50/60 Hz

Low voltage DC power supply:
Operational value:
24 to 55 V_{DC} (- 20 % + 15 %) = 19 to 64 V_{DC}

Power consumption

Maximum power varies depending on the configuration of the modules. The value shows maximum apparent power, select the applicable cables accordingly. The actual consumed effective power is 12 W.

High voltage AC power supply:
28.8 VA

Low voltage AC power supply:
21.6 VA

Low voltage DC power supply:
13.4 W

Cable entries

Ordering feature 090 "Electrical Connection" [1]	Cable entries (with blind plugs) [2]
A	7 x thread M20
B	7 x thread M25
C	7 x thread G1/2
D	7 x thread G3/4
E	7 x thread NPT1/2
F	7 x thread NPT3/4

1) Position 090 of the order code, e.g. NMx8x-xxxxxxxxxxxxxA...
2) The entries NOT having I/O modules inside will be directly assembled with 316L blind plugs without adapters. For details of module positions, refer to the chapter for "Slots for I/O modules" in Operating Instructions.

For the following devices with JPN Ex approval, cable glands are attached to the device (see position 010 of the order code). These cable glands must be used.
- Micropilot NMR84-TA...
- Micropilot NMR84-TC...
- Micropilot NMR84-TE...

Cable specification

Terminals

Wire cross section 0.2 to 2.5 mm² (24 to 13 AWG)
Use for terminals with function: Signal and power supply
- Spring terminals (NMx8x-xx1...)
- Screw terminals (NMx8x-xx2...)

Wire cross section max. 2.5 mm² (13 AWG)
Use for terminals with function: Ground terminal in the terminal compartment

Wire cross section max. 4 mm² (11 AWG)
Use for terminals with function: Ground terminal at the housing

Power supply line

Standard device cable is sufficient for the power line.

Analog signal lines

Screened cable must be used for:
- the 4 to 20 mA signal lines.
- the RTD connection.

Digital I/O signal lines

- Shielded cable is recommended if using the relays.
- Observe the grounding concept of the plant.

HART communication line

Shielded cable is recommended if using the HART protocol. Observe the grounding concept of the plant.

Modbus communication line

- Observe the cable conditions from the TIA-485-A, Telecommunications Industry Association.
- Additional conditions: Use shielded cable.

V1 communication line

- 2-wire twisted pair, screened or unscreened cable
- Resistance in one cable: ≤ 120 Ω
- Capacitance between lines: ≤ 0.3 µF

WM550 communication line

- 2-wire twisted pair, unscreened cable
- Cross section minimum 0.5 mm^2 (20 AWG)
- Maximum total cable resistance: ≤ 250 Ω
- Cable with low capacitance

Overvoltage protection

On the communication and power lines; according to IEC 60060-1 /DIN 60079-14:

10 kA, 8/20 µs, 10 pulses according to IEC 60060-1 / DIN 60079-14

Overvoltage category

Overvoltage category II

Pollution degree

Pollution degree 2

Performance characteristics

Sampling rate

> 2 s^{-1}

Reference operating conditions

According to OIML R85 (2008)
- Temperature: −25 to +55 °C (−13 to 131 °F)
- Atmospheric pressure
- Relative humidity (air): 65 % ±15 %
- Medium with good reflectivity and calm surface
- No major interference reflections inside the signal beam

Measured value resolution

≤ 0.1 mm (0.004 in)

Maximum measured error

The following values are valid for a measuring distance up to 30 m (100 ft) or 50 m (164 ft)

Ordering feature 150 "Accuracy, Weight + Measure Approval" [1]	Maximum measured error
▪ ITA: Maximum performance, 10-point calibration certificate ▪ ITB: Maximum performance, 10-point calibration certificate, extended range	±0.5 mm (±0.02 in)
▪ ITC: Standard version, 10-point calibration certificate ▪ ITD: Standard version, 10-point calibration certificate, extended range	±1 mm (±0.04 in)
▪ ICR: Standard version, w/o calibration certificate ▪ ICW: Standard version, 3-point calibration certificate ▪ ICX: Standard version, 5-point calibration certificate	±1 mm (±0.04 in)

1) Position 21 to 23 in the order code (e.g. NMR8x-xxxxxxxxxxxxxxxxxxxxxICR...)

Hysteresis

0.2 mm (0.008 in)

Repeatability

0.2 mm (0.008 in)

Linearity

Within maximum measured error

Long-term drift

Within the specified error of measurement

Influence of ambient temperature

Within the specified accuracy according to OIML R85 (2008)

Installation

Installation conditions

Conditions for the stilling well

- Metal (no enamel coating)
- Constant diameter (no rectangular stilling wells)
- Weld seam as smooth as possible
- For best radar propagation behavior it is recommended to have holes instead of slots. If slots can not be avoided, they should be as thin and short as possible.
- Maximum gap between antenna/horn and wall of the stilling well: 5 mm (0.2 in).
- At any transition (e.g. when using a ball valve or mending pipe segments) gaps must not exceed 1 mm (0.04 in).
- The stilling well must be smooth on the inside. Average roughness ≤ 6.3 µm (0.248 µin)
- Length and number of the holes do not affect the measurement. The hole diameter (deburred) can be 1/7 of the well diameter, but should not exceed 30 mm (1.2 in).
- An increase of the pipe diameter is possible if the minimum lengths according to the following figure and table are taken into account:

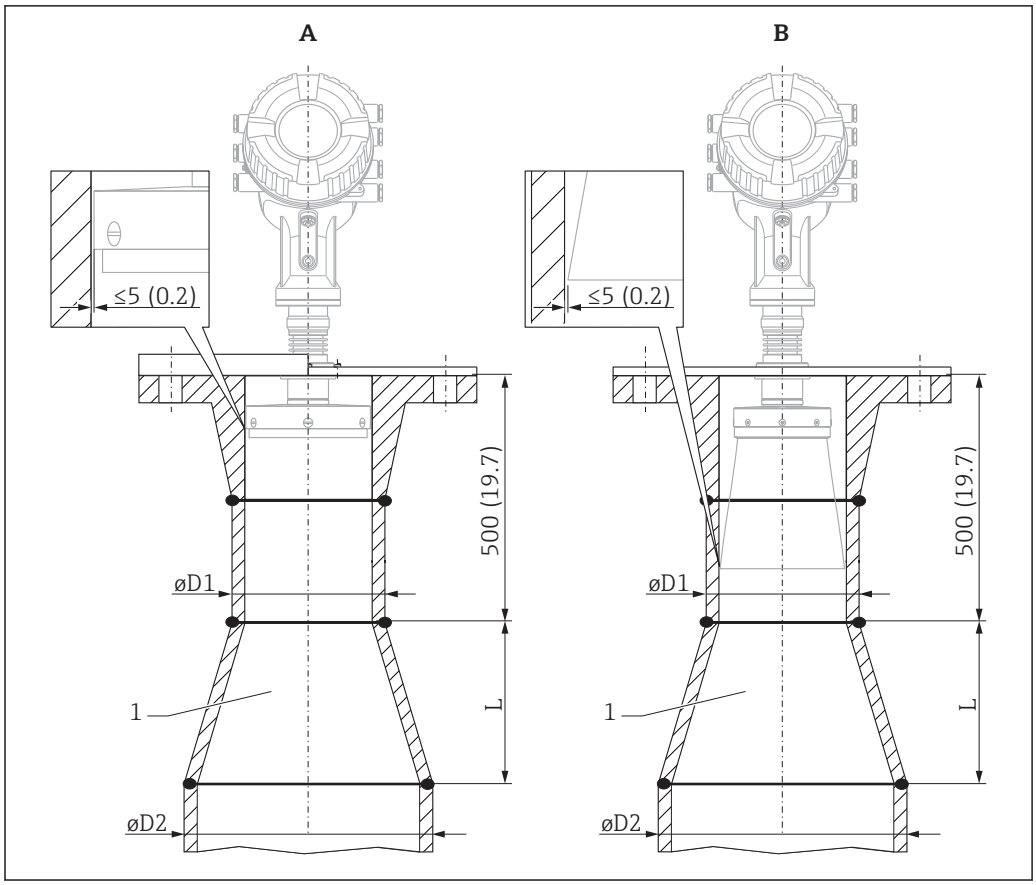

12 Installation of NMR84 in stilling wells with a larger diameter

A Antenna ≤150 mm (6 in) (without horn extension)
B Antenna ≥ 200 mm (8 in) (with horn extension)
1 Extension from ØD1 to ØD2

D1 [1]	D2	L
100 mm (4 in)	150 mm (6 in)	300 mm (12 in)
150 mm (6 in)	200 mm (8 in)	300 mm (12 in)
200 mm (8 in)	250 mm (10 in)	300 mm (12 in)
250 mm (10 in)	300 mm (12 in)	450 mm (18 in)

1) = antenna size

Environment

Ambient temperature range

Device	−40 to +60 °C (−40 to +140 °F)
Display module	−20 to +70 °C (−4 to +158 °F) The readability of the display may be impaired at temperatures outside this temperature range.

Ambient temperature limits

The following diagrams take into account only functional aspects. There may be further restrictions for certified device versions. Please refer to the separate Safety Instructions.

Device configuration

The ambient temperature limits depend on the I/O modules present in the slots of the terminal compartment. Data are given for the following five typical configurations:

I/O configuration	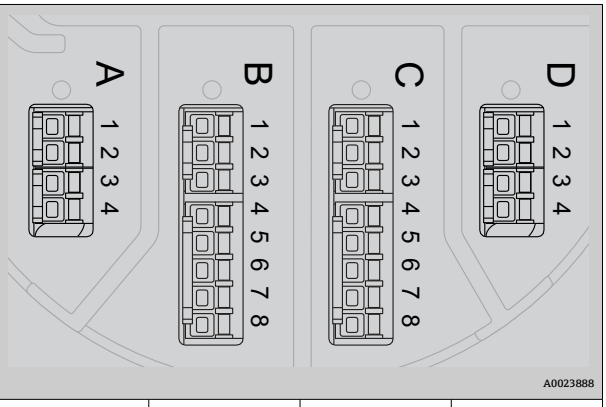			
1 (worst case)	✔	✔	✔	✔
2 (best case)	-	-	-	-
3	✔	✔	-	-
4	✔	-	-	-
5	✔	✔	-	✔

With a temperature (T_p) at the process connection the admissible ambient temperature (T_a) is reduced according to the following diagram (temperature derating):

Ambient temperature limits for NMR81

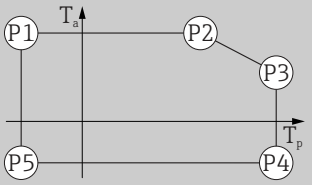

Temperature unit: °C (°F)

A0019351

I/O configuration	P1		P2		P3		P4		P5	
	T_p	T_a	T_p	T_a	T_p	T_a	T_p	T_a	T_p	T_a
1	-40 (-40)	55 (131)	55 (131)	55 (131)	150 (302)	50 (122)	150 (302)	-40 (-40)	-40 (-40)	-40 (-40)
2	-40 (-40)	60 (140)	60 (140)	60 (140)	150 (302)	57 (135)	150 (302)	-40 (-40)	-40 (-40)	-40 (-40)
3	-40 (-40)	55 (131)	55 (131)	55 (131)	150 (302)	53 (127)	150 (302)	-40 (-40)	-40 (-40)	-40 (-40)
4	-40 (-40)	60 (140)	60 (140)	60 (140)	150 (302)	55 (131)	150 (302)	-40 (-40)	-40 (-40)	-40 (-40)
5	-40 (-40)	55 (131)	55 (131)	55 (131)	150 (302)	52 (125)	150 (302)	-40 (-40)	-40 (-40)	-40 (-40)

Classification of environmental conditions according to DIN EN 60721-3-4

4K5, 4K6, 4B1, 4M7, 4Z2, 4Z3, 4Z8

Storage temperature

−50 to +80 °C (−58 to +176 °F)

Humidity

≤ 95 %

Degree of protection

- IP66/68 according to DIN EN 60529
- Type 6P/4X according to NEMA 250

Shock resistance

- 30 g (18 ms) according to DIN EN 60068-2-27 (1993)
- Classification according to DIN EN 60721-3-4: 4M7

Vibration resistance

- 20 to 2 000 Hz, 1 $(m/s^2)^2/Hz$ according to DIN EN 60068-2-64 (1994)
- This corresponds to an acceleration value of 4.5 g and fulfills class 4M7 of DIN EN 60721-3-4 (1995)

Electromagnetic compatibility (EMC)

- Transient emissions according to DIN EN 61326, class B
- Interference resistance according to DIN EN 61326, Appendix A (Industry use) and NAMUR recommendation NE21

Maximum use altitude

2 000 m (6 561.68 ft) above sea level

Process

Process temperature range

Device	Process temperature range
NMR84	−40 to +150 °C (−40 to +302 °F)

Process temperation range (Cryogenic liquefied gases)

Device	T_1 1)	T_2 2)
NMR84	−196 to +150 °C (−321 to +302 °F)	−40 to +150 °C (−40 to +302 °F)

1) T_1 = Product temperature
2) T_2 = Temperature at antenna

An extension tube can be mounted to extend the distance from the antenna to the product.

Process pressure range

Device	Process pressure range
NMR84	−1 to +25 bar (−14.5 to +362 psi)

Dielectric constant

Application	Dielectric constant
Stilling well	$\varepsilon_r \geq 1.4$

For the dielectric constants (DC values) of many media commonly used in industry, please refer to:
- Dielectric constant (DC value) Compendium CP01076F
- The Endress+Hauser "DC Values app" (available for Android and iOS)

Custody transfer approval

As a prerequisite for custody transfer approval, the device ordered must show either option ITA, ITB, ITC or ITD on ordering feature 150 "Accuracy, Weight + Measure approval".

Options of ordering feature 590 "Additional Approval"

- **LK**
  NMi witnessed initial verification accuracy, Weight + Measure approval
- **LL**
  PTB witnessed initial verification accuracy, Weight + Measure approval
- **LN**
  LNE witnessed initial verification accuracy, Weight + Measure approval
- **LO**
  *NMi type approval
- **LP**
  *PTB type approval
- **LQ**
  *LNE type approval
- **LT**
  METAS, custody transfer
- **LU**
  BEV, custody transfer

Micropilot NMR8x that are certified for Custody Transfer applications are calibrated on a certified production rig. The production rig reference standard is a laser tracker with an absolute accuracy of ±0.016 mm and a resolution of 0.0001 mm. Calibration is performed at 10 equally-spaced measuring points over the full measuring range.

The Maximum Permissible Error (MPE) is ±0.5 mm (±0.02 in) for Maximum performance models, and ±1 mm (±0.04 in) for Custody transfer models. The resultant Factory Calibration Certificate is included in the scope of delivery along with the respective type approval certificate.

Mechanical construction

Dimensions

Housing

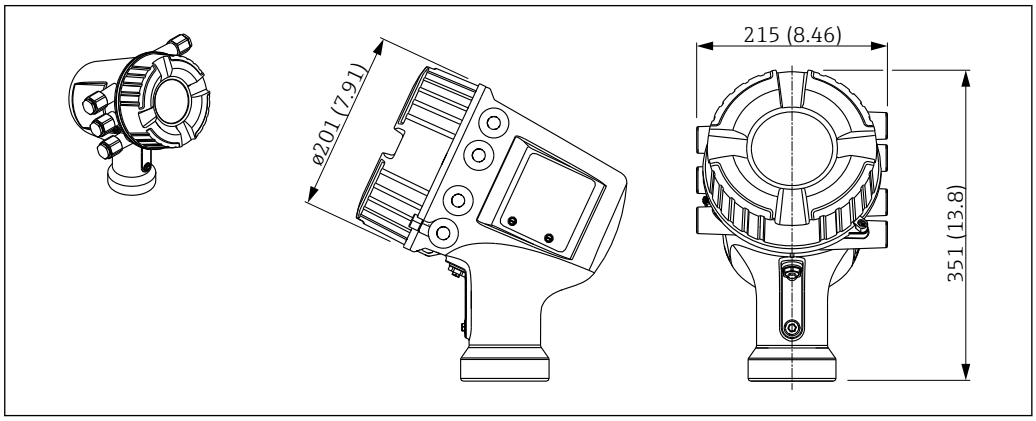

13 *Dimensions of the electronics housing; unit of measurement: mm (in); adapters for cable entries are not taken into account in this drawing.*

Process connection and sensor

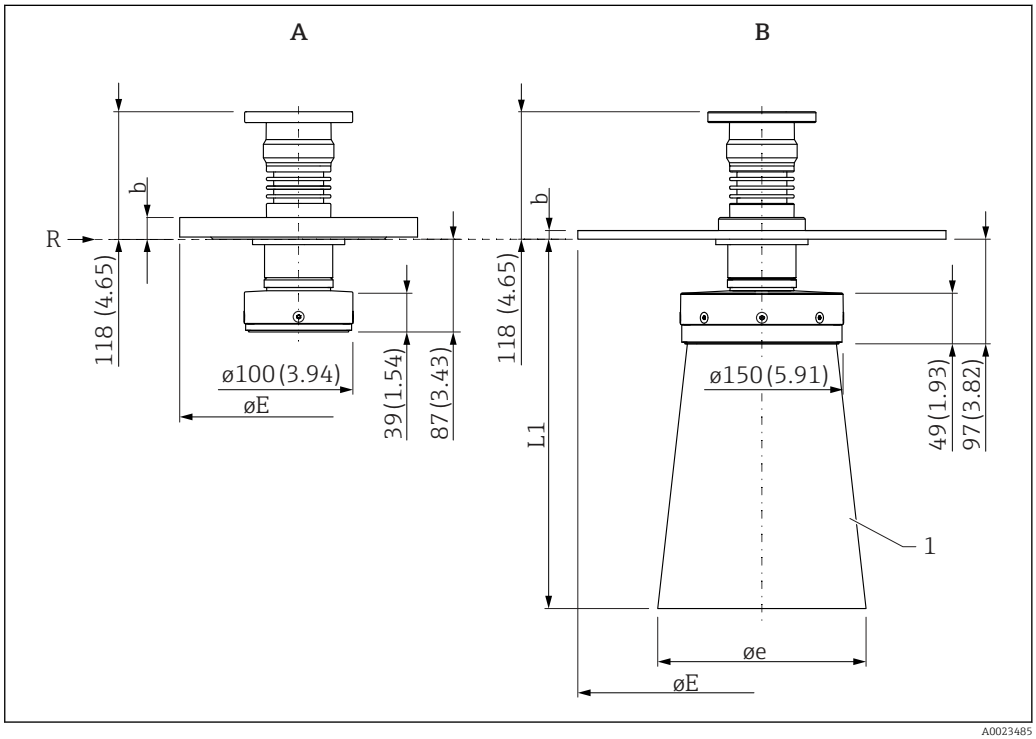

14 *Dimensions of the planar antenna (NMR84); unit of measurement: mm (in)*

A Planar antenna 100mm/4"
B Planar antenna 150mm/6" to 300mm/12"
1 Antenna extension for antennas ≥ 200 mm (8 in)
R Reference point of the measurement

Antenna extension

D [1]	O [2]				
	BD [3]	BF [4]	BG [5]	BH [6]	BJ [7]
e	-	-	192 mm (7.56 in)	242 mm (9.53 in)	292 mm (11.5 in)
L1	-	-	341 mm (13.4 in)	494 mm (19.4 in)	521 mm (20.5 in)

1) Dimension
2) Ordering feature 100 "Antenna"; Position 14 and 15 of the order code
3) BD: Planar 100mm/4"
4) BF: Planar 150mm/6"
5) BG: Planar 200mm/8"
6) BH: Planar 250mm/10"
7) BJ: Planar 300mm/12"

Flanges according to ASME B16.5. Pressure rating 150 lbs (A) / 300 lbs (B) [1]

D [2]	E [3]			
	4"	6"	8"	10"
A [4]				
b	23.9 mm (0.94 in)	25.4 mm (1 in)	28.4 mm (1.12 in)	30.2 mm (1.19 in)
⌀E	⌀228.6 mm (9 in)	⌀279.4 mm (11 in)	⌀342.9 mm (13.5 in)	⌀406.4 mm (16 in)
B [5]				
b	31.8 mm (1.25 in)	36.6 mm (1.44 in)	41.1 mm (1.62 in)	-
⌀E	⌀254 mm (10 in)	⌀317.5 mm (12.5 in)	⌀381 mm (15 in)	-

1) Ordering feature 140 (position 18 to 20 of the order code)
2) Dimension
3) Nominal diameter
4) Pressure rating 150 lbs
5) Pressure rating 300 lbs

Flanges according to EN1092-1 (suitable for DIN2527). Pressure rating PN10 and PN16 (A) / PN25 and PN40 (B) [1]

D [2]	E [3]			
	DN100	DN150	DN200	DN250
A [4]				
b	20 mm (0.79 in)	22 mm (0.87 in)	24 mm (0.94 in)	26 mm (1.02 in)
⌀E	⌀220 mm (8.66 in)	⌀285 mm (11.2 in)	⌀340 mm (13.4 in)	⌀405 mm (15.9 in)
B [5]				
b	24 mm (0.94 in)	28 mm (1.1 in)	30 mm (1.18 in)	-
⌀E	⌀235 mm (9.25 in)	⌀300 mm (11.8 in)	⌀360 mm (14.2 in)	-

1) Ordering feature 140 (position 18 to 20 of the order code)
2) Dimension
3) Nominal diameter
4) Pressure rating PN10 and PN16
5) Pressure rating PN25 and PN40

Flanges according to JIS B2220. Pressure rating 10 K (A) and 20 K (B) [1]

D [2]	E [3]	
	100A	150A
A [4]		
b	18 mm (0.71 in)	22 mm (0.87 in)
ϕE	ϕ210 mm (8.27 in)	ϕ280 mm (11 in)
B [5]		
b	24 mm (0.94 in)	28 mm (1.1 in)
ϕE	225 mm (8.8 in)	ϕ305 mm (12 in)

1) Ordering feature 140 (position 18 to 20 of the order code)
2) Dimension
3) Nominal diameter
4) Pressure rating 10 K
5) Pressure rating 20 K

Flanges according to JPI 7S-15. Pressure rating 150 lbs (A) / 300 lbs (B) [1]

D [2]	E [3]	
	100A	150A
A [4]		
b	23.9 mm (0.94 in)	25.4 mm (1 in)
ϕE	ϕ228.6 mm (9 in)	ϕ279.4 mm (11 in)
B [5]		
b	31.8 mm (1.25 in)	-
ϕE	ϕ254 mm (10 in)	-

1) Ordering feature 140 (position 18 to 20 of the order code)
2) Dimension
3) Nominal diameter
4) Pressure rating 150 lbs
5) Pressure rating 300 lbs

UNI flanges

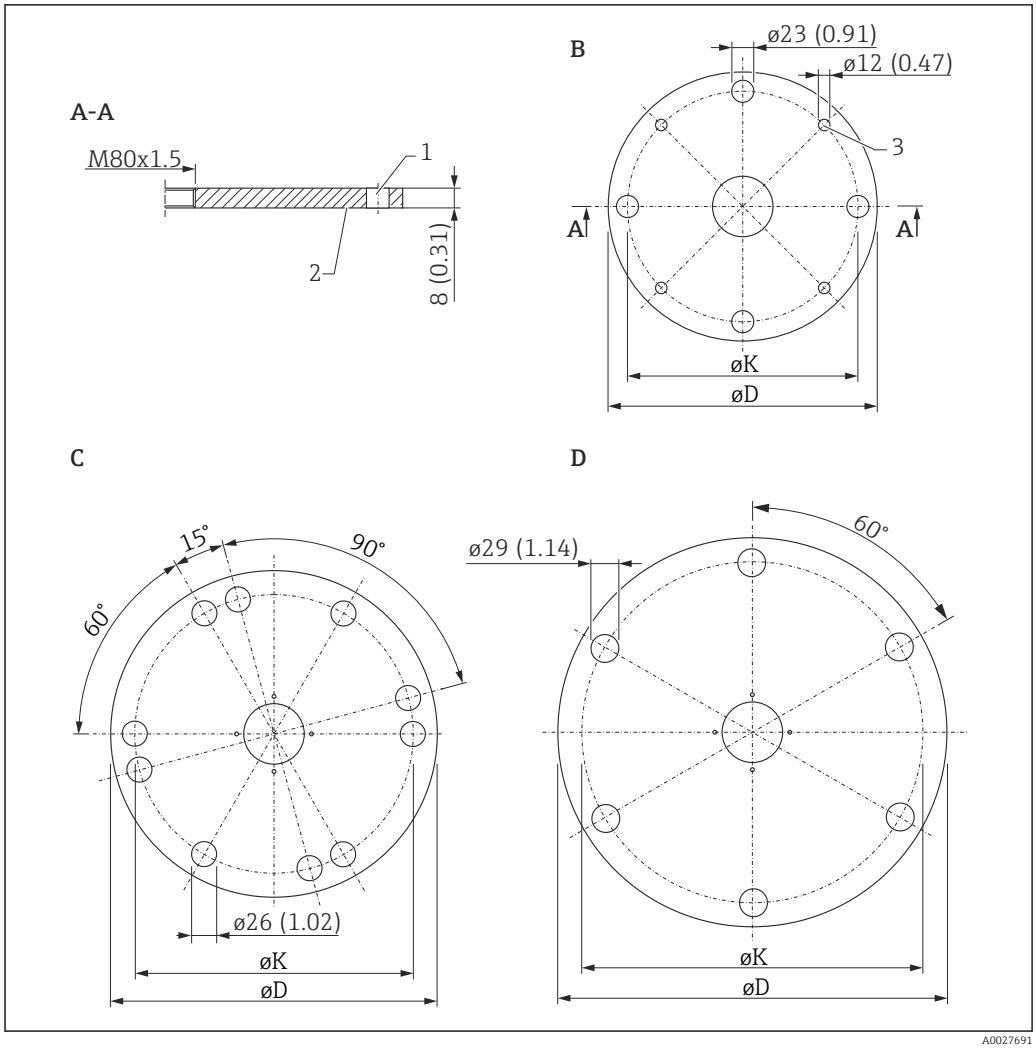

15 UNI flanges

B UNI flange DN150/6"/150
C UNI flange DN200/8"/200
D UNI flange DN250/10"/250

UNI flange DN150/6"/150

- Option of ordering feature 140 ("Process Connection") [5)]
  RKJ
- Suitable for
  - DN150, PN10/16 (EN1092-1)
  - NPS 6" Cl. 150 (ASME B16.5)
  - 10K 150A (JIS B2220)
- ØD
  280 mm (11.0 in)
- ØK
  240 mm (9.45 in)
- Material
  1.4301

5) Position 18 to 20 of the order code

UNI flange DN200/8"/200
- Option of ordering feature 140 ("Process Connection") [6]
  RLJ
- Suitable for
  - DN200, PN10/16 (EN1092-1)
  - NPS 8" Cl. 150 (ASME B16.5)
  - 10K 200A (JIS B2220)
- ØD
  340 mm (13.4 in)
- ØK
  294.5 mm (11.6 in)
- Material
  1.4301

UNI flange DN250/10"/250
- Option of ordering feature 140 ("Process Connection") [7]
  RMJ
- Suitable for
  - DN250, PN10/16 (EN1092-1)
  - NPS 10" Cl. 150 (ASME B16.5)
  - 10K 250A (JIS B2220)
- ØD
  405 mm (15.9 in)
- ØK
  358 mm (14.1 in)
- Material
  1.4301

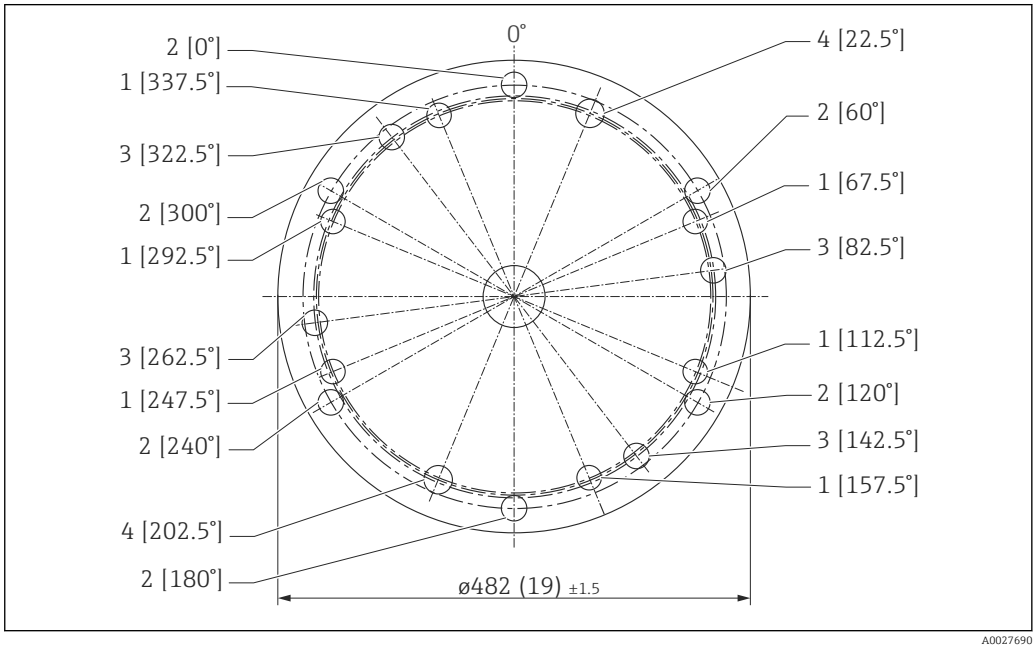

16 UNI flange DN300/12"/300

1 Bores for 10K 300A (JIS B2220)
2 Bores for NPS 12" Cl.150 (ASME B16.5)
3 Bores for DN300 PN10/16 (EN1092-1)
4 Bores for DN300 PN10/16 (EN1092-1) and 10K 300A (JIS B2220)

6) Position 18 to 20 of the order code
7) Position 18 to 20 of the order code

UNI flange DN300/12"/300
- Option of ordering feature 140 ("Process Connection") [8)]
  RNJ
- Suitable for
  - DN300, PN10/16 (EN1092-1)
  - NPS 12" Cl. 150 (ASME B16.5)
  - 10K 300A (JIS B2220)
- Material
  1.4301

Weight
- Housing with electronics: approx. 12 kg (26 lb)
- Sensor and process connection: 8.5 to 43 kg (19 to 95 lb); dependent on the device version

Materials

Materials of housing

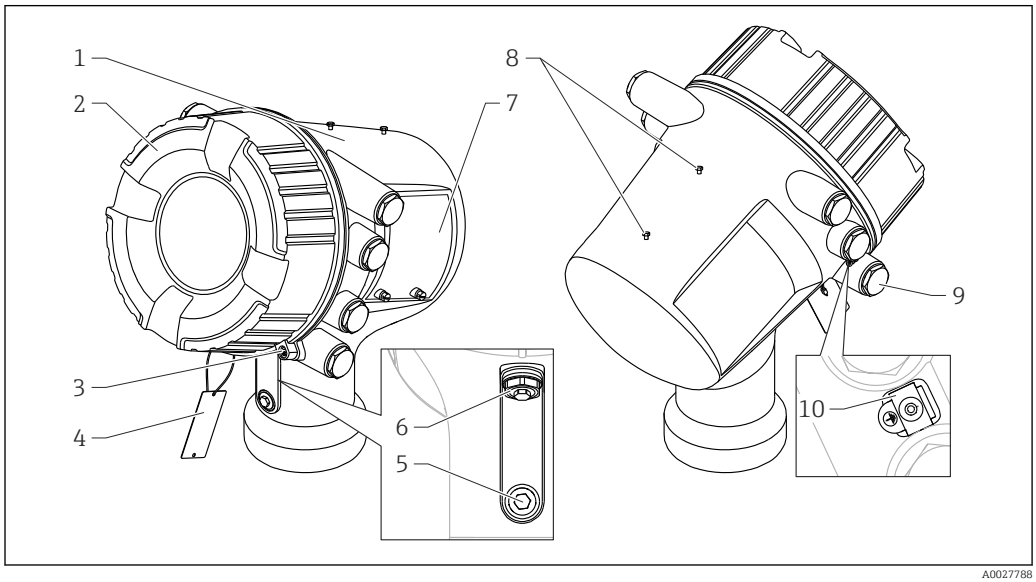

A0027788

1 Housing
2 Cover
3 Cover lock
4 Tag for measuring point label
5 Pressure release stopper for Ex i/IS chamber
6 Pressure release stopper for Ex d/XP chamber
7 Nameplate
8 Dummy screws for weather protection cover
9 Dummy plug, cable gland or adapter. Depending on device version
10 Ground terminal

1 Housing
- **Aluminum** housing type, RAL 5012 (blue):
  - Housing: AC 43000 T6; AlSi10Mg (< 0,1 % Cu)
  - Coating: Polyester
- **Stainless steel** housing type: 316L (1.4404)

2 Cover
- **Aluminum** housing type cover, RAL 7035 (grey): AC 43000 T6; AlSi10Mg (< 0,1 % Cu)
- **Stainless steel** housing type cover: 316L (1.4404)
- Window: Glass
- Seal: FVMQ
- Thread-coating: Graphite-based lubricant varnish

3 Cover lock
- Capstan screw: 316L (1.4404)
- Clamp: 316L (1.4435)

8) Position 18 to 20 of the order code

4 Tag for measuring point label
316L (1.4404)

5 Pressure release stopper for Ex i/IS chamber
316L (1.4404)

6 Pressure release stopper for Ex d/XP chamber
- Stopper: 316L (1.4404)
- O-ring: EPDM

7 Nameplate
- **Aluminum** housing type:
  Sticker: Plastic
- **Stainless steel** housing type:
  - Nameplate: 316L (1.4404)
  - Groove pins: 316Ti (1.4571)
- Sealing screw: A4
- O-ring: FKM

8 Dummy screws for weather protection cover
- Screw: A4-70
- O-ring: EPDM

9 Dummy plug, cable gland or adapter [9)]
- Dummy plug
  - 1.4435
  - LD-PE
- Adapter:
  - Ms/Ni (TIIS)
  - 1.4404 (other versions)
- Seal:
  - EPDM
  - NBR
  - PTFE tape

10 Ground terminal
- Screw: A4-70
- Spring washer: A4
- Clamp and holder: 316L (1.4404)

9) Depending on device version

Materials of antenna and process connection

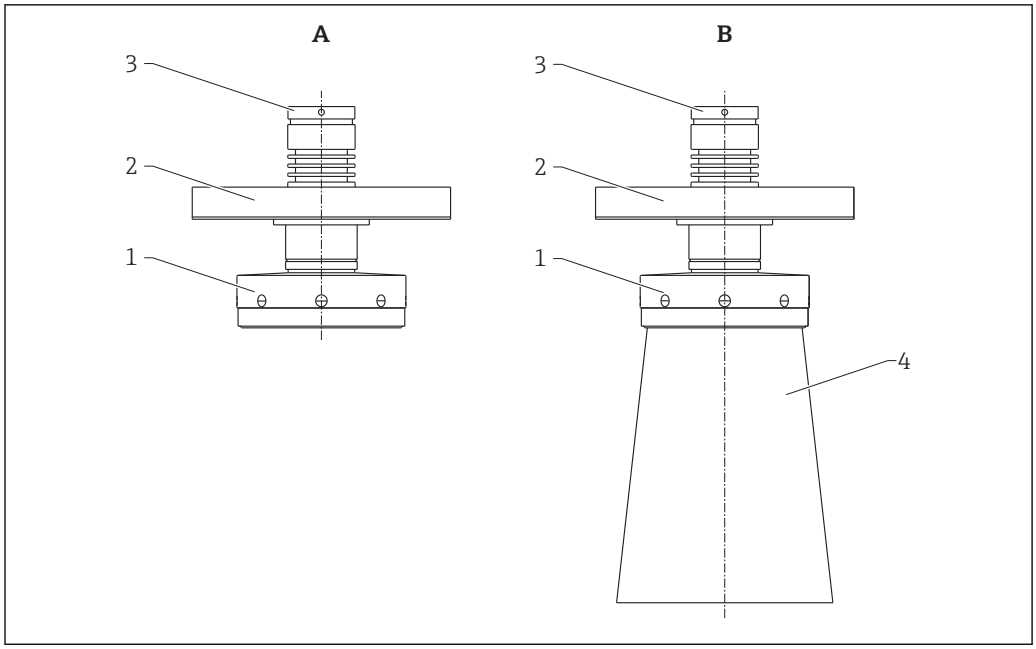

A Version without antenna extension (DN100/4", DN150/6")
B Version with antenna extension (≥ DN200/8")
1 Planar antenna with sensor adapter
2 Flange
3 Housing adapter
4 Antenna extension for antennas ≥ 200 mm (8 in)

1 Planar antenna with sensor adapter
- Planar antenna: PTFE
- Sealing ring: FKM /HNBR / FFKM
- Sensor adapter: 316L (1.4404)
- Antenna retaining ring: 316L (1.4404)
- Screw: A2

2 Flange
Flange: ASME/EN/JIS/JPI: 316L (1.4404/1.4435)

3 Housing adapter
Housing adapter: 316L (1.4404)

4 Antenna extension
Antenna extension: 316L (1.4404)

Operability

Operating concept

Operator-oriented menu structure for user-specific tasks
- Commissioning
- Operation
- Diagnostics
- Expert level

Operating languages
- English
- Chinese
- German
- Japanese
- Spanish

Feature 500 of the product structure determines which of these languages is preset on delivery.

Quick and safe commissioning
- Guided menus ("Make-it-run" wizards) for applications
- Menu guidance with brief explanations of the individual parameter functions

Reliable operation
Standardized operation at the device and in the operating tools

Efficient diagnostics increase measurement reliability
- Remedy information is integrated in plain text
- Diverse simulation options

Operating options

- Local display; operation via the local display is possible without opening the device.
- Tank Gauging system
- Plant Asset Management tool (e.g. FieldCare); connected via
  - HART
  - Service port (CDI)

Local operation

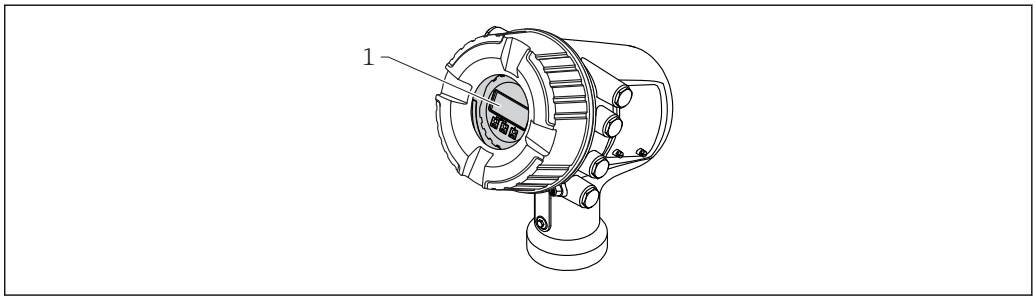

17 *Local operation of the Micropilot NMR81/NMR84*

1 Display and operating module

Display elements
- 4-line display
- White background lighting; switches to red in event of device errors
- Format for displaying measured variables and status variables can be individually configured
- Permitted ambient temperature for the display: −20 to +70 °C (−4 to +158 °F)
  The readability of the display may be impaired at temperatures outside the temperature range.

Operating elements
- External operation via touch control; 3 optical keys: ⊕, ⊖, E
- Operating elements also accessible in various hazardous areas

Remote display and operating module DKX001

The display and operating elements correspond to those of the display module.

Depending on the installation location, the remote display module DKX001 provides better access to the operating elements than the display on the device.

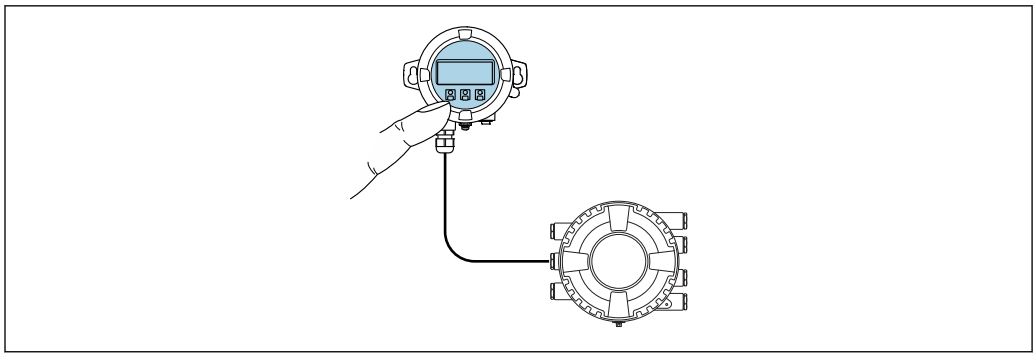

A0042197

18 Operation via remote display and operating module DKX001

The remote display and operating module DKX001 is available as an accessory. For details refer to SD01763D.

- The measured value is indicated on the DKX001 and on the local display and operating module simultaneously.
- The operating menu cannot be accessed on both modules at the same time. If the operating menu is entered in one of these modules, the other module is automatically locked. This locking remains active until the menu is closed in the first module (back to measured value display).

The housing material of the display and operating module DKX001 can be selected in the order code. There are 2 options : alu and stainless steel.

Remote operation

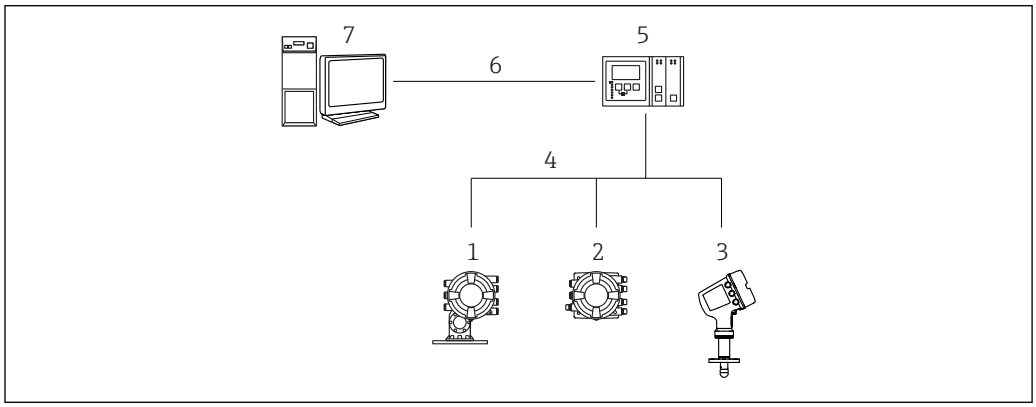

A0025621

19 Remote operation of Tank Gauging devices

1 Proservo NMS8x
2 Tankside Monitor NRF81
3 Micropilot NMR8x
4 Field protocol (e.g. Modbus, V1)
5 Tankvision Tank Scanner NXA820
6 Ethernet
7 Computer with operating tool (e.g. FieldCare)

Operation via service interface

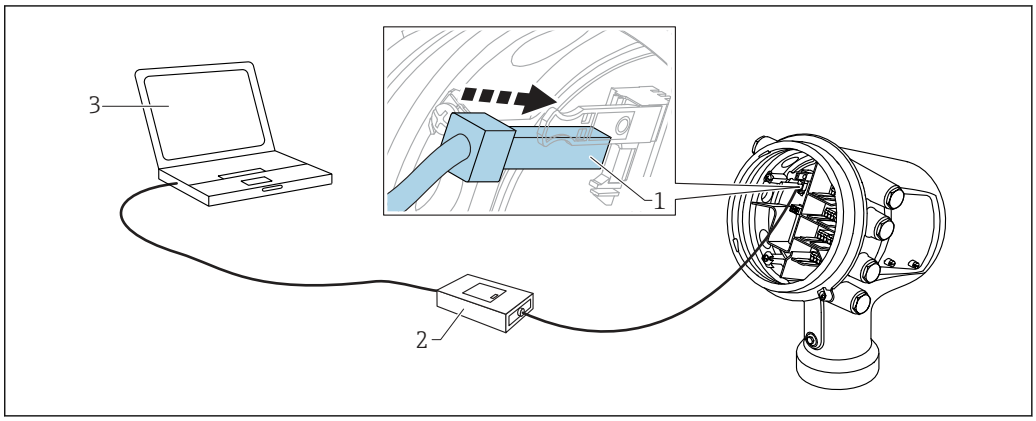

20 Operation via service interface

1 Service interface (CDI = Endress+Hauser Common Data Interface)
2 Commubox FXA291
3 Computer with "FieldCare" operating tool and "CDI Communication FXA291" COM DTM

Certificates and approvals

Current certificates and approvals for the product are available at www.endress.com on the relevant product page:

1. Select the product using the filters and search field.
2. Open the product page.
3. Select **Downloads**.

CE mark

The measuring system meets the legal requirements of the applicable EU guidelines. These are listed in the corresponding EU Declaration of Conformity together with the standards applied.

Endress+Hauser confirms successful testing of the device by affixing to it the CE mark.

RCM marking

The supplied product or measuring system meets the ACMA (Australian Communications and Media Authority) requirements for network integrity, interoperability, performance characteristics as well as health and safety regulations. Here, especially the regulatory arrangements for electromagnetic compatibility are met. The products bear the RCM marking on the nameplate.



A0029561

Ex approval

Certificates are available online for the following approval types.

- AEx
- ATEX
- FM C/US
- EAC Ex
- IEC Ex
- INMETRO Ex
- JPN Ex
- KC Ex
- NEPSI

Currently available certificates and approvals can be called up via the product configurator.

Additional safety instructions must be followed for use in hazardous areas. Please refer to the separate "Safety Instructions" (XA) document included in the delivery. Reference to the applicable XA can be found on the nameplate.

Single seal according to ANSI/ISA 12.27.01

The devices have been designed according to ANSI/ISA 12.27.01 as single seal devices, allowing the user to waive the use and save the cost of installing external secondary process seals in the conduit as required by the process sealing sections of ANSI/NFPA 70 (NEC) and CSA 22.1 (CEC) These instruments comply with the North-American installation practice and provide a very safe and cost-saving installation for pressurized applications with hazardous fluids.

Further information can be found in the Safety Instructions (XA) of the relevant devices.

Functional Safety (SIL)

Use for level monitoring (MIN, MAX, range) up to SIL 2/3 according to IEC 61508:2010.

For details refer to the "Functional Safety Manual":
FY01081G

WHG

DIBt: Z-65.16-588

Weight & Measure approval

- OIML R85 (2008)
- NMi
- PTB

- PAC
- LNE
- WELMEC

The device has a sealable locking switch according to the Weight & Measure requirements. This switch locks all software parameters related to the measurement. The switching status is indicated on the display and via the communication protocol.

Radio standard EN302372-1/2

The devices are conform with the TLPR (Tanks Level Probing Radar) standard EN302372-1/2 and can always be used in closed tanks or bins. For installation, points a to f in Annex B of EN302372-1 have to be taken into account.

FCC / Industry Canada

This device complies with Part 15 of the FCC rules. Operation is subject to the following two conditions: (1) This device may not cause harmful interference, and (2) this device must accept any interference received, including interference that may cause undesired operation.

This device complies with Industry Canada licence-exempt RSS standard(s). Operation is subject to the following two conditions: (1) This device may not interference, and (2) this device must accept any interference, including interference that may cause undesired operation of the device.

Le présent appareil est conforme aux CNR d'Industrie Canada applicables aux appareils radio exempts de licence. L'exploitation est autorisée aux deux conditions suivantes : (1) l'appareil ne doit pas produire de brouillage, et (2) l'utilisateur de l'appareil doit accepter tout brouillage radioélectrique subi, même si le brouillage est susceptible d'en compromettre le fonctionnement.

[Any] changes or modifications not expressly approved by the party responsible for compliance could void the user's authority to operate the equipment.

Non-ionizing radiation protection

According to guideline 2004/40/EG-ICNIRP Guidelines EN50371

CRN approval

Some device versions have a CRN approval. Devices are CRN approved if the following two conditions are met:
- The CRN approval is selected (Product structure: Feature 590 "Additional Approval", option LD "CRN")
- The device has a CRN approved process connection according to the following table:

Feature 140: Process Connection	Meaning
AGJ	NPS 4" Cl.150 RF, 316/316L, flange ASME B16.5
AHJ	NPS 6" Cl.150 RF, 316/316L, flange ASME B16.5
AJJ	NPS 8" Cl.150 RF, 316/316L, flange ASME B16.5
AKJ	NPS 10" Cl.150 RF, 316/316L, flange ASME B16.5
ATJ	NPS 4" Cl.300 RF, 316/316L, flange ASME B16.5
AUJ	NPS 6" Cl.300 RF, 316/316L, flange ASME B16.5

- Process connections without CRN approval are not included in this table.
- CRN approved devices are marked with the registration number OF18153.5C on the nameplate.

Pressure equipment with permitted pressure ≤ 200 bar (2 900 psi)

Pressure instruments with a process connection that does not have a pressurized housing do not fall within the scope of the Pressure Equipment Directive, irrespective of the maximum allowable pressure.

Reasons:

According to Article 2, point 5 of EU Directive 2014/68/EU, pressure accessories are defined as "devices with an operational function and having pressure-bearing housings".

If a pressure instrument does not have a pressure-bearing housing (no identifiable pressure chamber of its own), there is no pressure accessory present within the meaning of the Directive.

Test, certificate

Ordering feature 580 "Test, Certificate"	Designation
JA	3.1 Material certificate, wetted metallic parts, EN10204-3.1 inspection certificate
JB	Conformity to NACE MR0175, wetted metallic parts
JE	Conformity to NACE MR0103, wetted metallic parts
KD	Helium leak test, internal procedure, inspection certificate
KE	Pressure test, internal procedure, inspection certificate
KG	PMI test (XRF), internal procedure, wetted metallic parts, inspection certificate
KP	Liquid penetrant test AD2000-HP5-3(PT), wetted/pressurized metallic parts, inspection certificate
KQ	Liquid penetrant test ISO23277-1 (PT), wetted/pressurized metallic parts, inspection certificate
KR	Liquid penetrant test ASME VIII-1 (PT), wetted/pressurized metallic parts, inspection certificate
KS	Welding documentation, wetted/pressurized seams

Other standards and guidelines

Industry standards

- Directive 2011/65/EU: "Restriction of Hazardous Substances" (RoHS)
- Directive 2014/32/EC: "Measuring Instruments Directive" (MID)
- IEC61508: "Functional Safety of Electrical/Electronic/Programmable Electronic Safety-related Systems" (SIL)
- NACE MR 0175, NACE MR 0103: "Sulfide stress cracking resistant metallic materials for oilfield equipment"
- API Recommended Practice 2350: "Overfill Protection for Storage Tanks in Petroleum Facilities"
- API MPMS: "Manual of Petroleum Measurement Standards"
- EN 1127: "Explosive atmospheres - Explosion prevention and protection"
- IEC 60079: "Equipment protection"
- EN 1092: "Flanges and their joints"
- EN 13463: "Non-electrical equipment for use in potentially explosive atmospheres"
- TIA-485-A: "Electrical Characteristics of Generators and Receivers for Use in Balanced Digital Multipoint Systems "
- IEC61511: "Functional safety - Safety instrumented systems for the process industry sector"
- IEEE 754: "Standard for Binary Floating-Point Arithmetic for microprocessor systems "
- ISO4266: "Petroleum and liquid petroleum products - measurement of level and temperature in storage tanks by automatic methods"
- ISO6578: "Refrigerated hydrocarbon liquids - Static measurement - Calculation procedure"
- ISO 11223: "Petroleum and liquid petroleum products - Determination of volume, density and mass of the contents of vertical cylindrical tanks by Hybrid Tank Measurement Systems"
- ISO15169: "Petroleum and liquid petroleum products - Direct static measurement - Measurement of content of vertical storage tanks by hydrostatic tank gauging"
- JIS K2250: "Petroleum Measurement Tables"
- JIS B 8273: "Bolted flange for pressure vessels"
- G.I.I.G.N.L.: "LNG Custody transfer handbook"
- NAMUR NE043: "Standardization of the Signal Level for the Failure Information of Digital Transmitters"
- NAMUR NE107: "Self-Monitoring and Diagnosis of Field Devices"

Metrological standards

- OIML R85 (2008) "Requirements for ambient temperature low −25 °C (−13 °F) and ambient temperature high +55 °C (+131 °F)
- "Mess- und Eichverordnung" (Calibration regulations for the Federal Republic of Germany)
- Directive 2014/32/EC of the European Parliament and of the Council of 26 February 2014 on measuring instruments
- PTB-A-5.01: "Automatic level measuring devices for stationary storage containers"

Ordering information

Ordering information

Detailed ordering information is available from your nearest sales organization www.addresses.endress.com or in the Product Configurator at www.endress.com:

1. Select the product using the filters and search field.
2. Open the product page.
3. Select **Configuration**.

Product Configurator - the tool for individual product configuration
- Up-to-the-minute configuration data
- Depending on the device: Direct input of measuring point-specific information such as measuring range or operating language
- Automatic verification of exclusion criteria
- Automatic creation of the order code and its breakdown in PDF or Excel output format
- Ability to order directly in the Endress+Hauser Online Shop

Calibration certificate

A calibration certificate is included if one of the following options is selected in ordering feature 150 ("Accuracy, Weight + Measure Approval").

Option [1]	Meaning	Number of calibration points
ICW	Standard version, 3-point calibration certificate	3
ICX	Standard version, 5-point calibration certificate	5
ITA	Maximum performance, 10-point calibration certificate	10
ITB	Maximum performance, 10-point, extended range, acc. to OIML R85, API 3.1B, ISO4266, factory calibration certificate	10
ITC	Standard version, 10-point calibration certificate	10
ITD	Standard version, 10-point, extended range, acc. to OIML R85, API 3.1B, ISO4266, factory calibration certificate	10

1) Option of ordering feature 150 "Accuracy, Weight + Measure Approval", Positions 21 to 23 of the order code

- The calibration points are evenly spaced and spread over the selected calibration range.
- The calibration points are checked under reference conditions.

Marking

Option of ordering feature 895 "Marking"	Meaning
Z1	Tagging (TAG)
Z2	Bus address

Optionally, the device can be ordered with a specific tagging and/or bus address according to the table above. When the respective option is selected, the tag or bus address must be defined in an additional specification.

Application packages

Advanced tank measurement methods

The device software provides the following tank measurement methods:
- Direct level measurement → 44
- Hybrid tank measurement system (HTMS) → 45
- Hydrostatic tank shell correction (HyTD) → 46
- Thermal tank shell correction (CTSh) → 46
- Level reference check (LRC) → 46
- Gas phase correction for liquefied gases (CLG) → 49

Direct level measurement

If no advanced tank measurement methods have been selected, level and temperature are measured directly.

Direct level measurement modes

Measuring mode	Installation example	Measured variables	Calculated variables
Level only	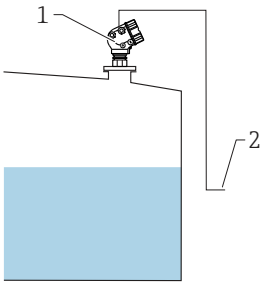 A0027111 *1 Micropilot* *2 To inventory management system*	Level	None
Level + temperature	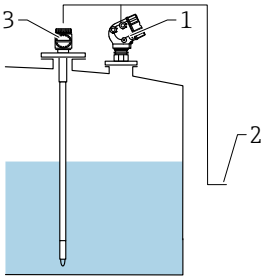 A0027112 *1 Micropilot* *2 To inventory management system* *3 Temperature (spot or average)*	▪ Level ▪ Temperature (spot or average)	None

Hybrid tank measurement system (HTMS)

HTMS uses level and pressure measurements to calculate the contents of the tank and (optionally) the density of the medium.

HTMS measuring modes

Measuring mode	Installation example	Measured variables	Calculated variables
HTMS + P1 This mode should be used in atmospheric (i.e. non-pressurized) tanks	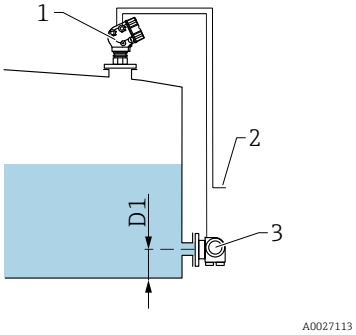 *1 Micropilot* *2 To inventory management system* *3 Pressure transmitter (bottom)*	▪ Level ▪ Bottom pressure (at position *D1*)	Density of the medium
HTMS + P1 + P3 This mode should be used in non- atmospheric (i.e. pressurized) tanks	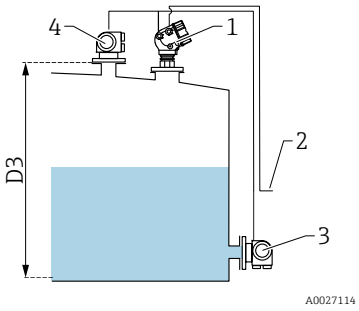 *1 Micropilot* *2 To inventory management system* *3 Pressure transmitter (bottom)* *4 Pressure transmitter (top)*	▪ Level ▪ Bottom pressure (at position *D1*) ▪ Top pressure (at position *D3*)	Density of the medium

Hydrostatic tank shell correction (HyTD)

The hydrostatic tank shell correction can be used to compensate for vertical movement of the Gauge Reference Height due to bulging of the tank shell caused by the hydrostatic pressure exerted by the liquid stored in the tank. The compensation is based on a linear approximation obtained from manual hand dips at several levels distributed over the full range of the tank.

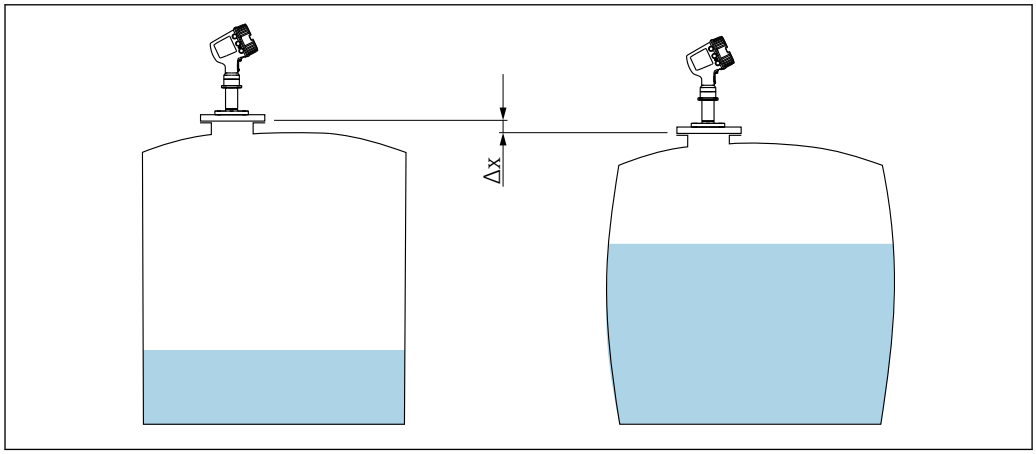

21 Movement Δx of the Gauge Reference Height due to the bulging of the tank shell caused by hydrostatic pressure

Thermal tank shell correction (CTSh)

The thermal tank shell correction can be used to compensate for vertical movement of the Gauge Reference Height due to temperature effects on the tank shell or stilling well. The calculation is based on the thermal expansion coefficients of steel and on insulation factors for both the dry and wetted part of the tank shell.

- This correction is recommended for any tank gauge operating at conditions deviating considerably from the conditions during calibration and for extremely high tanks. For refrigerated, cryogenic and heated applications this correction is highly recommended.
- Wire length can also be corrected with the parameters related to CTSh.

Level reference check (LRC)

For tanks where a manual dipping cannot be performed the level gauge can be verified by means of the LRC function.

If the measured level value is not verified by the LRC function applied, the device will issue an error message regarding the measured level.

This reference check is recommended for liquefied gas applications.

LRC with reference level

The radar device compares it's own level reading with the level reading of another level gauge (e.g. Proservo NMS8x). Based on a configurable deviation value (**Allowed difference** parameter), a continuous check is performed.

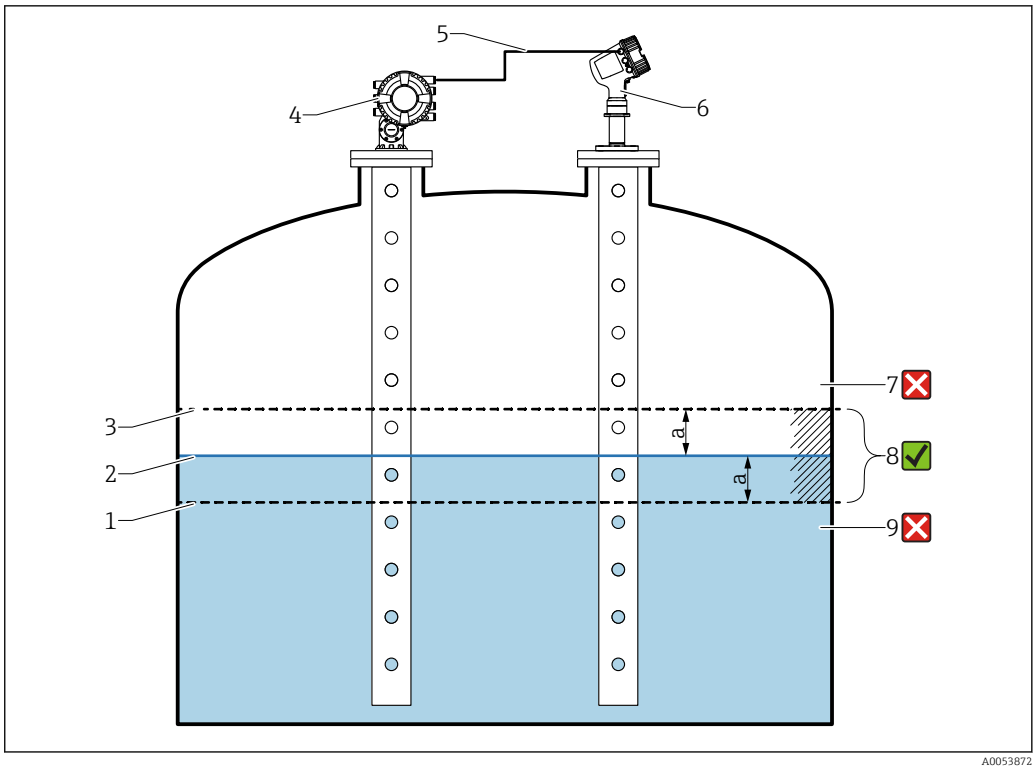

22 *Application example with Proservo NMS8x*

1 *Lower limit of deviation value "a" as configured in radar level gauge*
2 *Reference value: Measured level as provided by level gauge Proservo NMS8x*
3 *Upper limit of deviation*
4 *Proservo NMS8x provides the reference value*
5 *Level gauges are interconnected via HART interface*
6 *Radar level gauge with configured deviation value "a" for "Allowed difference" parameter*
7 *The measured level is greater than reference value plus deviation value "a": Level value is not verified*
8 *The measured level is within or equal to the limits defined by the deviation value "a": Level value is verified*
9 *The measured level is less than reference value minus deviation value "a": Level value is not verified*

Properties
- Frequency: The reference check is performed continuously every 60 seconds.
- Tolerance: Via the **Check fail threshold** parameter, a configurable number of failures is allowed before the status switches to failed.
- Connection: The level reference device is connected via an optional HART I/O board.
  See ordering feature 050: "Secondary I/O Analogue".

LRC with point reference

Mechanical parts in the tank can be used as reference points to perform a reference measurement. The reference distance can be saved to the device. Based on a configurable deviation value (**Allowed difference** parameter), a manual check can be started.

A closed cut off ball valve or a fixed reference ring at the end of a stilling well are examples for suitable reference measurement installations.

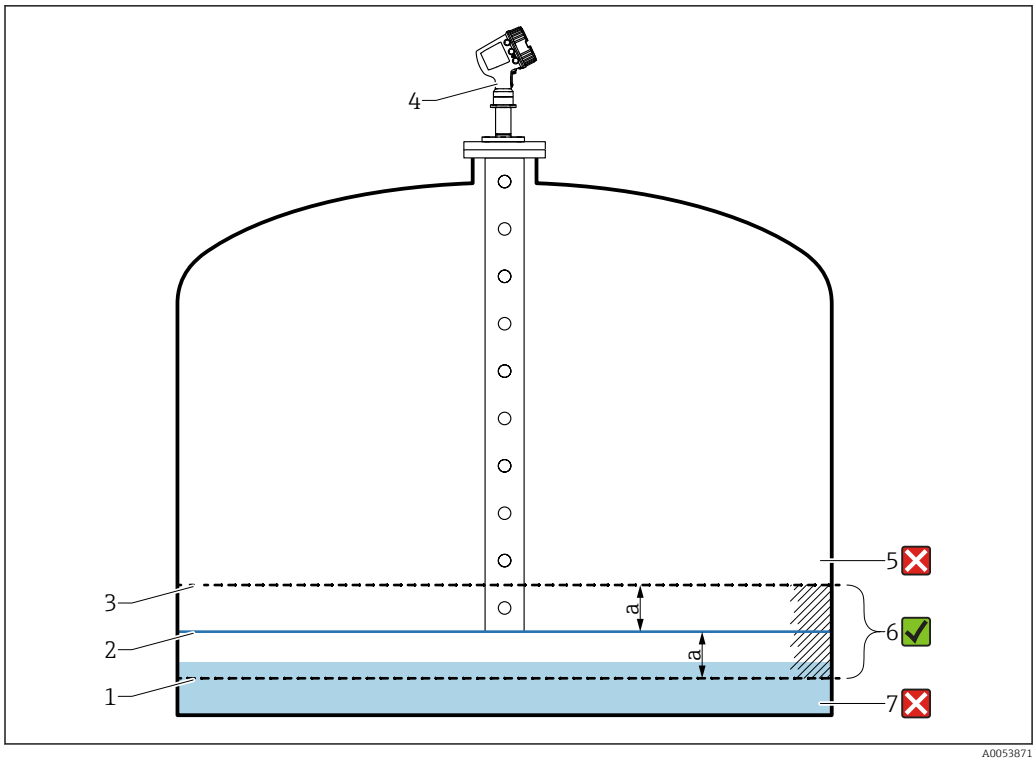

23 Application example with fixed reference point at the end of the stilling well

1 *Lower limit of deviation value "a" as configured in radar level gauge*
2 *Reference value: Distance from radar level gauge to object fixed to stilling well*
3 *Upper limit of deviation*
4 *Radar level gauge with configured deviation value "a" for "Allowed difference" parameter*
5 *The measured level is greater than reference value plus deviation value "a": Level value is not verified*
6 *The measured level is within or equal to the limits defined by the deviation value "a": Level value is verified*
7 *The measured level is less than reference value minus deviation value "a": Level value is not verified*

LRC with reference switch

A level switch (e.g. Liquiphant FTLx) can be mounted within the tank. The check can be performed continuously, each time the level switch is activated or deactivated. The measured level should remain within a configurable deviation.

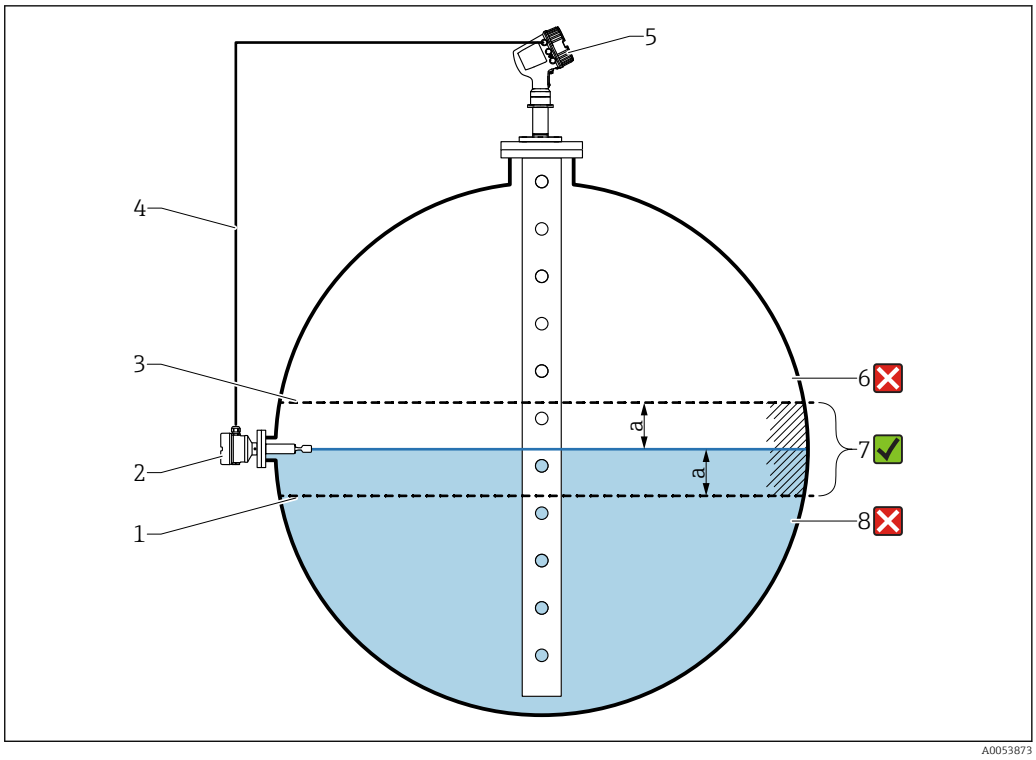

24 *Application example with level switch*

1 *Lower limit of deviation value "a" as configured in radar level gauge*
2 *Reference value: The switching point of an installed level switch represents the reference value for verification*
3 *Upper limit of deviation*
4 *Level switch and level gauge are interconnected via a digital I/O board*
5 *Radar level gauge with configured deviation value "a" for "Allowed difference" parameter*
6 *The measured level is greater than reference value plus deviation value "a": Level value is not verified*
7 *The measured level is within or equal to the limits defined by the deviation value "a": Level value is verified*
8 *The measured level is less than reference value minus deviation value "a": Level value is not verified*

Properties
- Modes: The device can be set to monitor the switching point while filling or draining the tank.
- Connection: The level switch is connected via a digital I/O board.
  See ordering feature 060: "Secondary I/O Digital Ex d/XP".

Gas phase correction for liquefied gases (CLG)

The gas phase in pressurized tanks has a direct impact on the distance determination for time-of-flight sensors. This feature corrects the influences of the vapor phase based on its pressure, temperature and composition.

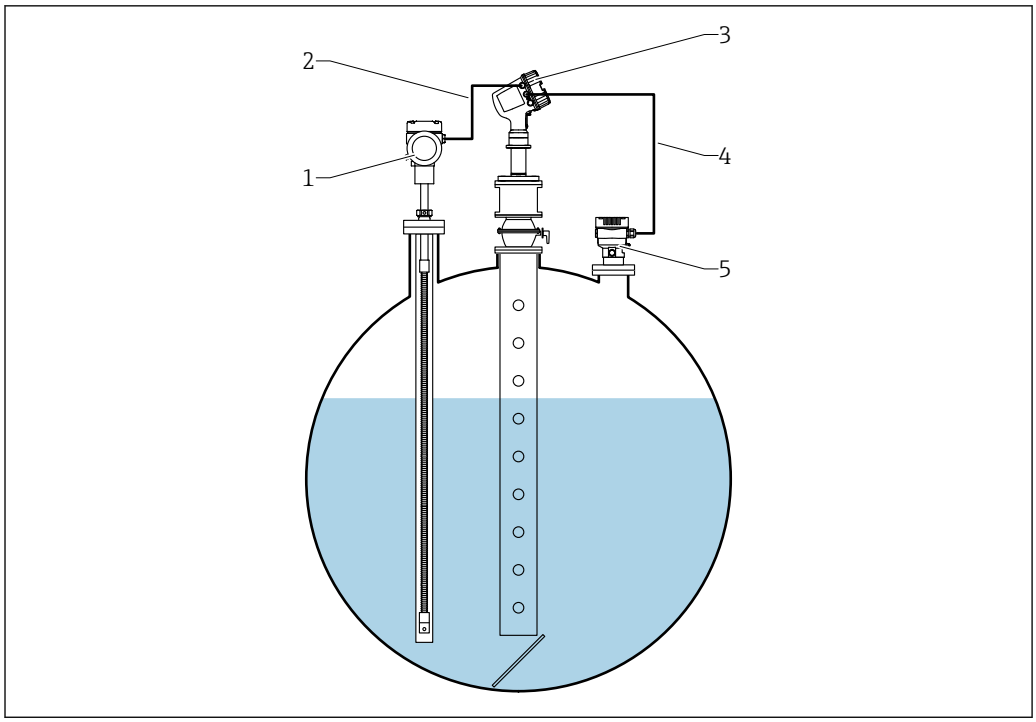

1 *Prothermo temperature measurement device, equipped with thermowell or protective pipe*
2 *HART connection*
3 *Radar level gauge Micropilot NMR84*
4 *HART connection*
5 *Digital pressure transmitter*

The vapor pressure and temperature measurement devices need to be connected via an optional HART I/O board.

Vapor phase composition

The vapor phase composition is entered manually via the display or an asset management software (e.g. DeviceCare).

The correction function can be set to the following values:
- Off
- **Pure gas** option: 1 main gas component
- **Mix of two gases** option: 2 main components with defined share
- **Mix of three gases** option: 3 main components with defined share
- **Mix of four gases** option: 4 main components with defined share

The share is entered in percent (i. e. mixture of 2 gases with 25 and 75 percent) or in amounts (i. e. mixture of 2 gases with 1 amount and 3 amounts), no unit required.

The gas components can either be selected from a predefined list or defined by the user to use a different gas component. In that case the refractive index for the component has to be entered.

Accessories

Device-specific accessories

Weather protection cover

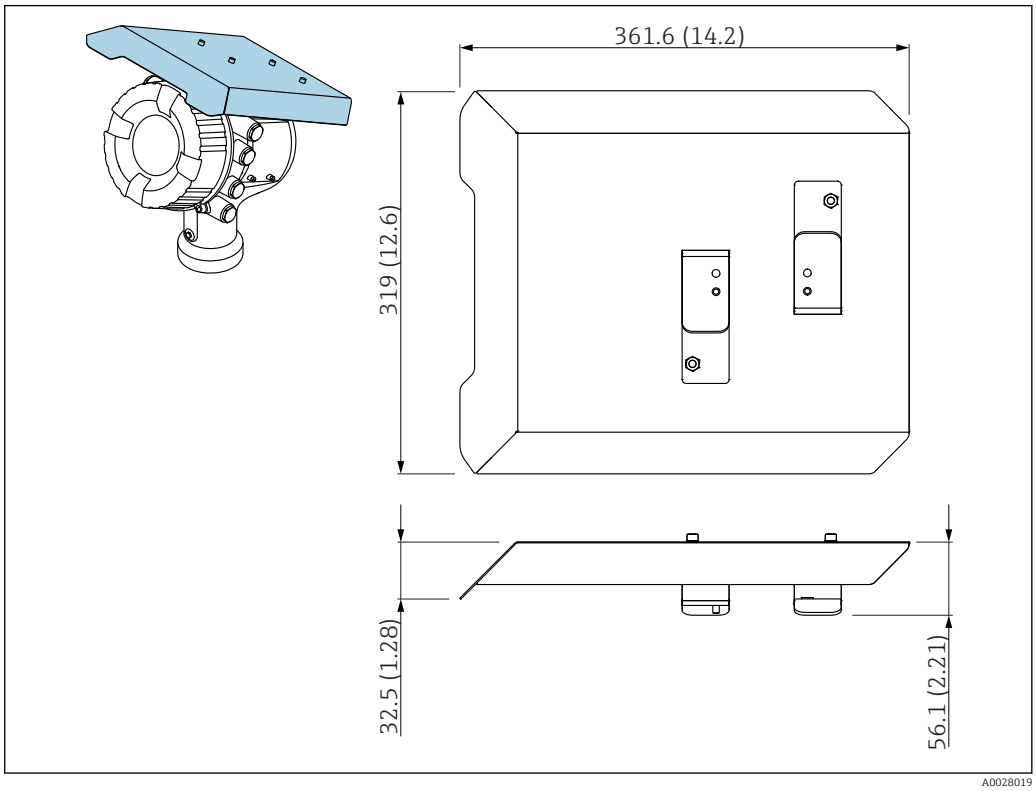

25 *Weather protection cover; dimensions: mm (in)*

Materials

- Protection cover and mounting brackets
  Material
  316L (1.4404)
- Screws and washers
  Material
  A4

- The weather protection cover can be ordered together with the device:
  Ordering feature 620 "Accessory Enclosed", option PA "Weather Protection Cover")
- It can also be ordered as an accessory:
  Order code: 71292751 (for NMR8x and NRF8x)

Communication-specific accessories

WirelessHART adapter SWA70
- Is used for the wireless connection of field devices
- The WirelessHART adapter can be easily integrated into field devices and existing infrastructures, offers data protection and transmission safety and can be operated in parallel with other wireless networks

For details, see Operating Instructions BA00061S

Gauge Emulator, Modbus to BPM
- Using the protocol converter, it is possible to integrate a field device into a host system even if the field device does not know the communication protocol of the host system. Eliminates vendor lock-in for field devices.
- Field communication protocol (field device): Modbus RS485
- Host communication protocol (host system): Enraf BPM
- 1 measuring device per Gauge Emulator
- Separate power supply: 100 to 240 V_{AC}, 50 to 60 Hz, 0.375 A, 15 W
- Several approvals for the hazardous area

Gauge Emulator, Modbus to TRL/2
- Using the protocol converter, it is possible to integrate a field device into a host system even if the field device does not know the communication protocol of the host system. Eliminates vendor lock-in for field devices.
- Field communication protocol (field device): Modbus RS485
- Host communication protocol (host system): Saab TRL/2
- 1 measuring device per Gauge Emulator
- Separate power supply: 100 to 240 V_{AC}, 50 to 60 Hz, 0.375 A, 15 W
- Several approvals for the hazardous area

Service-specific accessories

Commubox FXA195 HART
For intrinsically safe HART communication with FieldCare via the USB interface

For details, see "Technical Information" TI00404F

Commubox FXA291
Connects Endress+Hauser field devices with a CDI interface (= Endress+Hauser Common Data Interface) and the USB port of a computer or laptop
Order number: 51516983

For details, see "Technical Information" TI00405C

DeviceCare SFE100
Configuration tool for HART, PROFIBUS and FOUNDATION Fieldbus field devices
DeviceCare is available for download at www.software-products.endress.com. You need to register in the Endress+Hauser software portal to download the application.

Technical Information TI01134S

FieldCare SFE500
FDT-based plant asset management tool
It can configure all smart field units in your system and helps you manage them. By using the status information, it is also a simple but effective way of checking their status and condition.

Technical Information TI00028S

System components

RIA15
Compact process display unit with very low voltage drop for universal use to display 4 to 20 mA/ HART signals

Technical Information TI01043K

Tankvision Tank Scanner NXA820 / Tankvision Data Concentrator NXA821 / Tankvision Host Link NXA822
Inventory Management System with completely integrated software for operation via standard web browser

Technical Information TI00419G

Documentation

The following documentation types are available in the Downloads area of the Endress+Hauser website (www.endress.com/downloads):

For an overview of the scope of the associated Technical Documentation, refer to the following:
- *Device Viewer* (www.endress.com/deviceviewer): Enter the serial number from the nameplate
- *Endress+Hauser Operations app*: Enter serial number from nameplate or scan matrix code on nameplate.

Technical Information (TI)	**Planning aid** The document contains all the technical data on the device and provides an overview of the accessories and other products that can be ordered for the device.
Brief Operating Instructions (KA)	**Guide that takes you quickly to the 1st measured value** The Brief Operating Instructions contain all the essential information from incoming acceptance to initial commissioning.
Operating Instructions (BA)	The Operating Instructions contain all the information that is required in various phases of the life cycle of the device: from product identification, incoming acceptance and storage, to mounting, connection, operation and commissioning through to troubleshooting, maintenance and disposal. It also contains a detailed explanation of each individual parameter in the operating menu (except the **Expert** menu). The description is aimed at those who work with the device over the entire life cycle and perform specific configurations.
Description of Device Parameters (GP)	The Description of Device Parameters provides a detailed explanation of each individual parameter in the 2nd part of the operating menu: the **Expert** menu. It contains all the device parameters and allows direct access to the parameters by entering a specific code. The description is aimed at those who work with the device over the entire life cycle and perform specific configurations.
Safety Instructions (XA)	Depending on the approval, the following Safety Instructions (XA) are supplied with the device. They are an integral part of the Operating Instructions. The nameplate indicates the Safety Instructions (XA) that are relevant to the device.
Installation instructions (EA)	Installation Instruction are used to replace a faulty unit with a functioning unit of the same type.

Registered trademarks

Modbus®
Registered trademark of SCHNEIDER AUTOMATION, INC.



www.addresses.endress.com

Endress+Hauser

People for Process Automation