BA01578F/00/EN/03.20
71473148
2020-03-30
01.00.zz (Device firmware)

Operating Instructions
Micropilot FMR20 HART

Free space radar

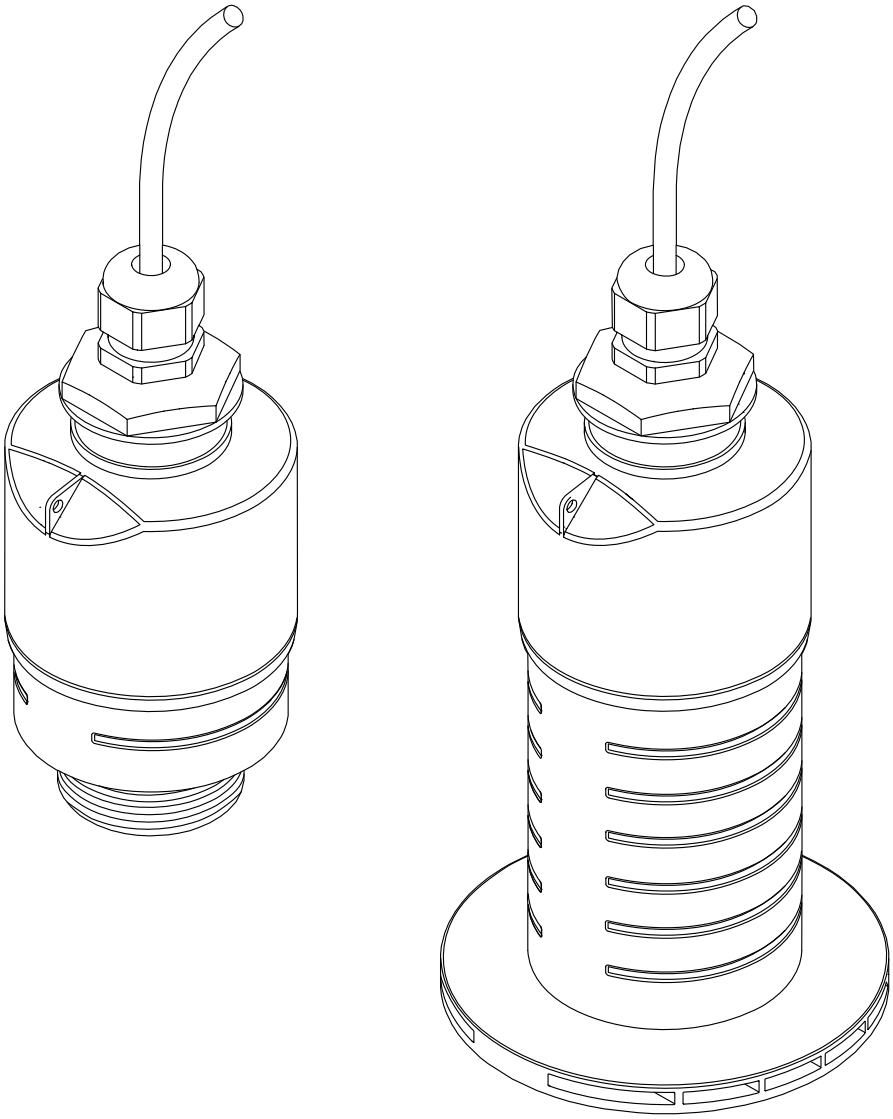

Endress+Hauser
People for Process Automation

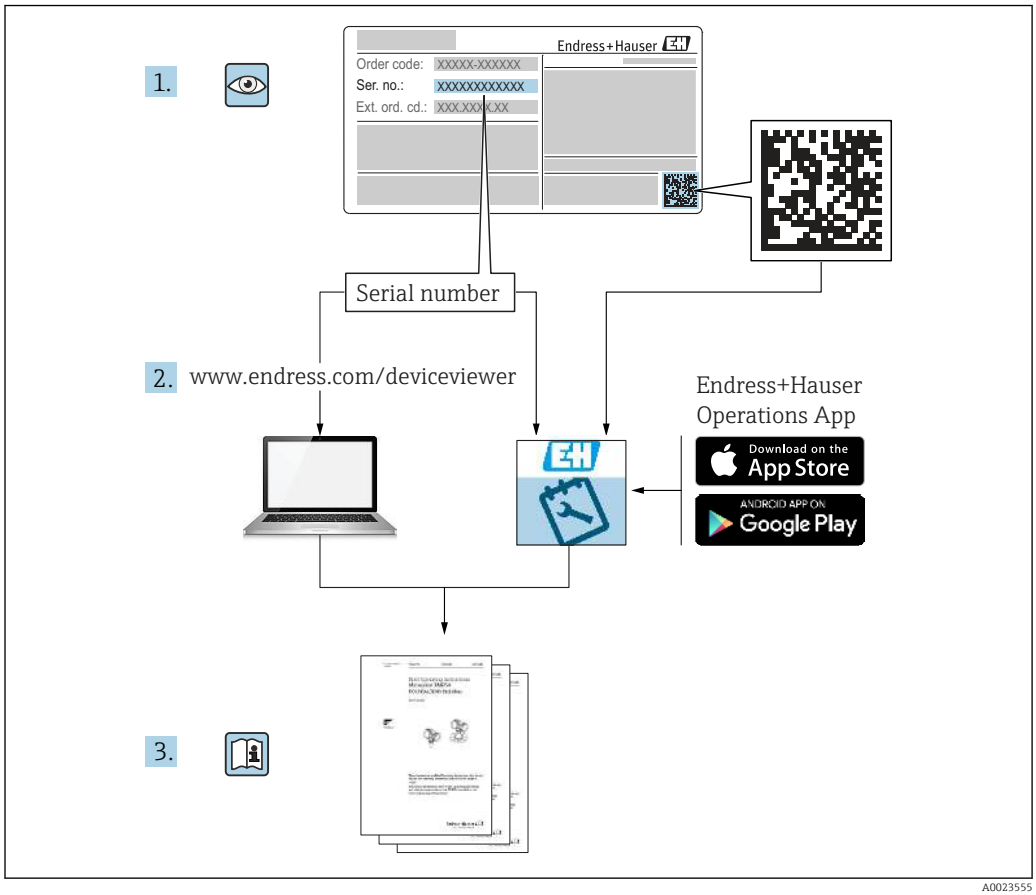
1.
Endress+Hauser
Order code: XXXXX-XXXXXX
Ser. no.: XXXXXXXXXXX
Ext. ord. cd.: XXX XXX XX
Serial number
2. www.endress.com/deviceviewer
Endress+Hauser
Operations App
Download on the App Store
ANDROID APP ON Google Play
3.
A0023555

Table of contents

1 About this document 5
1.1 Document function 5
1.2 Symbols used 5
1.2.1 Safety symbols 5
1.2.2 Symbols for certain types of information and graphics 5
1.3 Documentation 6
1.3.1 Technical Information (TI) 6
1.3.2 Brief Operating Instructions (KA) 6
1.3.3 Safety Instructions (XA) 6
1.4 Terms and abbreviations 7
1.5 Registered trademarks 7

2 Basic safety instructions 8
2.1 Requirements for personnel 8
2.2 Designated use 8
2.3 Workplace safety 9
2.4 Operational safety 9
2.5 Product safety 9
2.5.1 CE mark 9
2.5.2 EAC conformity 9

3 Product description 10
3.1 Product design 10

4 Incoming acceptance and product identification 11
4.1 Goods acceptance 11
4.2 Product identification 11
4.3 Manufacturer address 11
4.4 Nameplate 12

5 Installation 13
5.1 Installation conditions 13
5.1.1 Installation types 13
5.1.2 Nozzle installation 13
5.1.3 Position for installation on a vessel . . 14
5.1.4 Device alignment for installation on a vessel 15
5.1.5 Beam angle 16
5.1.6 Measurement in plastic vessels 17
5.1.7 Protective hood 17
5.1.8 Using the flooding protection tube . . . 18
5.1.9 Installation with mounting bracket, adjustable 19
5.1.10 Cantilever installation, with pivot 19
5.1.11 Installation of horizontal mounting bracket for sewer shafts 20
5.1.12 Mounting in a shaft 20
5.2 Post-installation check 20

6 Electrical connection 21
6.1 Cable assignment 21
6.2 Supply voltage 21
6.3 Connecting the device 22
6.3.1 4 to 20 mA HART block diagram 22
6.3.2 HART device block diagram, connection with RIA15 23
6.3.3 Block diagram of HART device, RIA15 with installed HART communication resistor module 24
6.4 Post-connection check 24

7 Operability 26
7.1 Operating concept 26
7.2 Operation via Bluetooth® wireless technology 26
7.3 Via HART protocol 26

8 System integration via HART protocol 27
8.1 Overview of the device description files 27
8.2 Measured variables via HART protocol 27

9 Commissioning and operation 28
9.1 Installation and function check 28
9.1.1 Post-installation check 28
9.1.2 Post-connection check 28
9.2 Commissioning via SmartBlue (App) 28
9.2.1 Device requirements 28
9.2.2 SmartBlue system requirements 28
9.2.3 SmartBlue App 28
9.2.4 Envelope curve display in SmartBlue 29
9.3 Operation and settings via RIA15 30
9.3.1 Operating functions 31
9.3.2 Operating modes 31
9.3.3 Operating matrix 32
9.4 Configuring level measurement via operating software 34
9.4.1 Via SmartBlue 34
9.4.2 Displaying level value as % 35
9.5 Configuring flow measurement via operating software 35
9.5.1 Installation conditions for flow measurement 35
9.5.2 Flow measurement configuration 36
9.6 Data access - Security 38
9.6.1 Software locking via access code in FieldCare / DeviceCare 38
9.6.2 Unlocking via FieldCare / DeviceCare 38
9.6.3 Software locking via access code in SmartBlue 38

9.6.4 Unlocking via SmartBlue 38
9.6.5 Bluetooth® wireless technology 39
9.6.6 RIA15 locking 39

10 Diagnostics and troubleshooting . . . 40
10.1 General errors 40
10.2 Error - SmartBlue operation 40
10.3 Diagnostic event in the operating tool 41
10.4 Diagnostic event in the RIA15 41
10.5 List of diagnostic events 42
10.6 Overview of information events 42

11 Maintenance 43
11.1 Cleaning the antenna 43
11.2 Process seals 43

12 Repair 44
12.1 General notes 44
12.1.1 Repair concept 44
12.1.2 Replacing a device 44
12.1.3 Return 44
12.1.4 Disposal 44

13 Accessories 45
13.1 Device-specific accessories 45
13.1.1 Protective cover 45
13.1.2 Securing nut G 1-1/2" 45
13.1.3 Securing nut G 2" 46
13.1.4 Flooding protection tube 40 mm (1.5 in) 47
13.1.5 Flooding protection tube 80 mm (3 in) 48
13.1.6 Mounting bracket, adjustable 49
13.1.7 UNI flange 2"/DN50/50, PP 50
13.1.8 UNI flange 3"/DN80/80, PP 51
13.1.9 UNI flange 4"/DN100/100, PP 52
13.1.10 Angle bracket for wall mounting 53
13.1.11 Cantilever with pivot 54
13.1.12 Ceiling mounting bracket 61
13.1.13 Pivoted mounting bracket for sewer channel 62
13.1.14 Horizontal mounting bracket for sewer shafts 63
13.1.15 RIA15 in the field housing 64
13.1.16 HART communication resistor 64
13.2 Communication-specific accessories 66
13.3 Service-specific accessories 66
13.4 System components 67

14 Operating menu 68
14.1 Overview of the operating menu (SmartBlue) 68
14.2 Overview of operating menu (FieldCare / DeviceCare) 72
14.3 "Setup" menu 76
14.3.1 "Advanced setup" submenu 79
14.3.2 "Communication" submenu 89
14.4 "Diagnostics" submenu 93
14.4.1 "Device information" submenu 95
14.4.2 "Simulation" submenu 97

Index 98

1 About this document

1.1 Document function

These Operating Instructions provide all of the information that is required in various phases of the life cycle of the device including:
- Product identification
- Incoming acceptance
- Storage
- Installation
- Connection
- Operation
- Commissioning
- Troubleshooting
- Maintenance
- Disposal

1.2 Symbols used

1.2.1 Safety symbols

⚠ DANGER
This symbol alerts you to a dangerous situation. Failure to avoid this situation will result in serious or fatal injury.

⚠ WARNING
This symbol alerts you to a dangerous situation. Failure to avoid this situation can result in serious or fatal injury.

⚠ CAUTION
This symbol alerts you to a dangerous situation. Failure to avoid this situation can result in minor or medium injury.

NOTICE
This symbol contains information on procedures and other facts which do not result in personal injury.

1.2.2 Symbols for certain types of information and graphics

✓ **Permitted**
Procedures, processes or actions that are permitted

✓✓ **Preferred**
Procedures, processes or actions that are preferred

✗ **Forbidden**
Procedures, processes or actions that are forbidden

ℹ **Tip**
Indicates additional information

Reference to documentation

Reference to graphic

▶
Notice or individual step to be observed

1., 2., 3.
Series of steps

Result of a step

Operation via operating tool

Write-protected parameter

1, 2, 3, ...
Item numbers

A, B, C, ...
Views

Safety instructions
Observe the safety instructions contained in the associated Operating Instructions

1.3 Documentation

The following documentation types are available in the Downloads area of the Endress +Hauser website (www.endress.com/downloads):

For an overview of the scope of the associated Technical Documentation, refer to the following:
- *W@M Device Viewer* (www.endress.com/deviceviewer): Enter the serial number from nameplate
- *Endress+Hauser Operations App*: Enter the serial number from the nameplate or scan the 2D matrix code (QR code) on the nameplate

1.3.1 Technical Information (TI)

Planning aid
The document contains all the technical data on the device and provides an overview of the accessories and other products that can be ordered for the device.

1.3.2 Brief Operating Instructions (KA)

Guide that takes you quickly to the 1st measured value
The Brief Operating Instructions contain all the essential information from incoming acceptance to initial commissioning.

1.3.3 Safety Instructions (XA)

Depending on the approval, the following Safety Instructions (XA) are supplied with the device. They are an integral part of the Operating Instructions.

The nameplate indicates the Safety Instructions (XA) that are relevant to the device.

1.4 Terms and abbreviations

BA
Document type "Operating Instructions"

KA
Document type "Brief Operating Instructions"

TI
Document type "Technical Information"

SD
Document type "Special Documentation"

XA
Document type "Safety Instructions"

PN
Nominal pressure

MWP
MWP (Maximum working pressure/max. process pressure)
The MWP can also be found on the nameplate.

ToF
Time of Flight

FieldCare
Scalable software tool for device configuration and integrated plant asset management solutions

DeviceCare
Universal configuration software for Endress+Hauser HART, PROFIBUS, FOUNDATION Fieldbus and Ethernet field devices

DTM
Device Type Manager

ε_r (Dk value)
Relative dielectric constant

Operating tool

The term "operating tool" is used in place of the following operating software:
- FieldCare / DeviceCare, for operation via HART communication and PC
- SmartBlue (app), for operation using an Android or iOS smartphone or tablet

BD
Blocking Distance; no signals are analyzed within the BD.

PLC
Programmable logic controller (PLC)

1.5 Registered trademarks

HART®
Registered trademark of the FieldComm Group, Austin, Texas, USA

Apple®
Apple, the Apple logo, iPhone, and iPod touch are trademarks of Apple Inc., registered in the U.S. and other countries. App Store is a service mark of Apple Inc.

Android®
Android, Google Play and the Google Play logo are trademarks of Google Inc.

Bluetooth®
The *Bluetooth®* word mark and logos are registered trademarks owned by the Bluetooth SIG, Inc. and any use of such marks by Endress+Hauser is under license. Other trademarks and trade names are those of their respective owners.

2 Basic safety instructions

2.1 Requirements for personnel

The personnel for installation, commissioning, diagnostics and maintenance must fulfill the following requirements:
- Trained, qualified specialists must have a relevant qualification for this specific function and task.
- Personnel must be authorized by the plant owner/operator.
- Be familiar with federal/national regulations.
- Before starting work: personnel must read and understand the instructions in the manual and supplementary documentation as well as the certificates (depending on the application).
- Personnel must follow instructions and comply with general policies.

The operating personnel must fulfill the following requirements:
- Personnel are instructed and authorized according to the requirements of the task by the facility's owner-operator.
- Personnel follow the instructions in this manual.

2.2 Designated use

Application and media
The measuring device described in these Operating Instructions is intended for continuous, non-contact level measurement in liquids. Because of its operating frequency of approx. 26 GHz, a maximum radiated pulsed power of 5.7 mW and an average power output of 0.015 mW, use outside of closed, metallic vessels is also permitted. If operated outside of closed vessels, the device must be mounted in accordance with the instructions in the "Installation" section. Operation of the devices does not pose a risk to health or the environment.

If the limit values specified in the "Technical data" and the conditions listed in the instructions and additional documentation are observed, the measuring device may be used for the following measurements only:
- Measured process variables: distance
- Calculated process variables: volume or mass in vessels of any shape; flow through measuring weirs or channels (calculated from the level by the linearization functionality)

To ensure that the measuring device remains in proper condition for the operation time:
- Use the measuring device only for media to which the process-wetted materials have an adequate level of resistance.
- Observe the limit values (see "Technical data").

Incorrect use
The manufacturer is not liable for damage caused by improper or non-designated use.

Verification for borderline cases:
- With regard to special media and media used for cleaning, please contact the manufacturer. Endress+Hauser will be happy to assist in clarifying the corrosion-resistant properties of wetted materials but does not accept any warranty or liability.

Residual risks
Due to heat transfer from the process as well as power dissipation within the electronics, the temperature of the electronics housing and the assemblies contained therein may rise to 80 °C (176 °F) during operation. When in operation, the sensor can reach a temperature close to the medium temperature.

Danger of burns from contact with surfaces!
- In the event of elevated fluid temperatures, ensure protection against contact to prevent burns.

2.3 Workplace safety

For work on and with the device:
- Wear the required personal protective equipment according to federal/national regulations.

2.4 Operational safety

Risk of injury!
- Operate the device only if it is in proper technical condition, free from errors and faults.
- The operator is responsible for interference-free operation of the device.

Modifications to the device

Unauthorized modifications to the device are not permitted and can lead to unforeseeable dangers:
- If modifications are nevertheless required, consult with the manufacturer.

Repair

To ensure continued operational safety and reliability:
- Carry out repairs on the device only if they are expressly permitted.
- Observe federal/national regulations pertaining to the repair of an electrical device.
- Use only original spare parts and accessories from the manufacturer.

Hazardous area

To eliminate the risk of danger to persons or the facility when the device is used in the approval-related area (e.g. explosion protection, pressure equipment safety):
- Check the nameplate to verify if the device ordered can be put to its intended use in the approval-related area.
- Observe the specifications in the separate supplementary documentation that is an integral part of this manual.

2.5 Product safety

This measuring device is designed in accordance with good engineering practice to meet state-of-the-art safety requirements, has been tested, and left the factory in a condition in which it is safe to operate. It meets general safety standards and legal requirements.

2.5.1 CE mark

The measuring system meets the legal requirements of the applicable EU Directives. These are listed in the corresponding EU Declaration of Conformity along with the standards applied.

Endress+Hauser confirms successful testing of the device by affixing to it the CE mark.

2.5.2 EAC conformity

The measuring system meets the legal requirements of the applicable EAC guidelines. These are listed in the corresponding EAC Declaration of Conformity together with the standards applied.

Endress+Hauser confirms successful testing of the device by affixing to it the EAC mark.

3 Product description

3.1 Product design

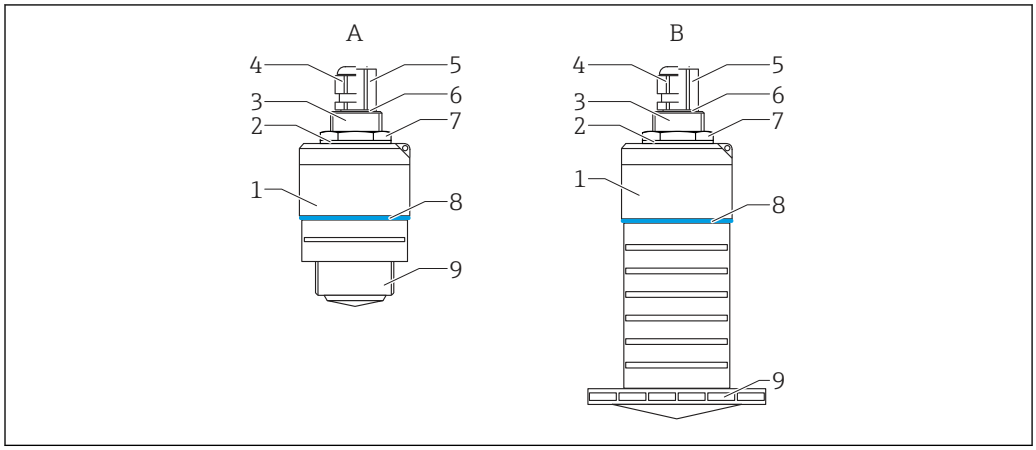

1 *Device design*

A Device with 40 mm antenna
B Device with 80 mm antenna
1 Sensor housing
2 Seal
3 Process connection rear side
4 Cable gland
5 Pipe adapter
6 O-ring
7 Counter nut
8 Design ring
9 Process connection front side

4 Incoming acceptance and product identification

4.1 Goods acceptance

Check the following during goods acceptance:
- Are the order codes on the delivery note and the product sticker identical?
- Are the goods undamaged?
- Do the nameplate data match the ordering information on the delivery note?
- If required (see nameplate): Are the safety instructions (XA) provided?

If one of these conditions is not met, please contact the manufacturer's sales office.

4.2 Product identification

The following options are available for the identification of the measuring device:
- Nameplate specifications
- Extended order code with breakdown of the device features on the delivery note

- Enter the serial number from the nameplates into *W@M Device Viewer* (www.endress.com/deviceviewer)
  - All the information about the measuring device and the scope of the associated Technical Documentation are displayed.

- Enter the serial number from the nameplate into the *Endress+Hauser Operations App* or use the *Endress+Hauser Operations App* to scan the 2-D matrix code (QR Code) provided on the nameplate
  - All the information about the measuring device and the scope of the associated Technical Documentation are displayed.

4.3 Manufacturer address

Endress+Hauser SE+Co. KG
Hauptstraße 1
79689 Maulburg, Germany

Address of the manufacturing plant: See nameplate.

4.4 Nameplate

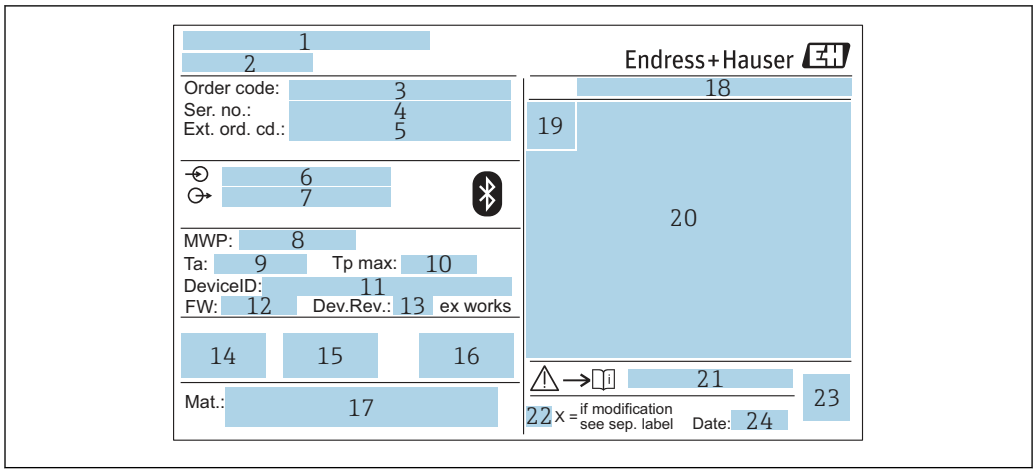

2 *Nameplate of Micropilot*

1 *Manufacturer address*
2 *Device name*
3 *Order code*
4 *Serial number (ser. no.)*
5 *Extended order code (ext. ord. cd.)*
6 *Supply voltage*
7 *Signal outputs*
8 *Process pressure*
9 *Allowable ambient temperature (T_a)*
10 *Maximum process temperature*
11 *Device ID*
12 *Firmware version (FW)*
13 *Device revision (Dev.Rev.)*
14 *CE mark*
15 *Additional information about the device version (certificates, approvals)*
16 *C-tick*
17 *Materials in contact with process*
18 *Degree of protection: e.g. IP, NEMA*
19 *Certificate symbol*
20 *Certificate and approval relevant data*
21 *Document number of the Safety Instructions: e.g. XA, ZD, ZE*
22 *Modification mark*
23 *2-D matrix code (QR code)*
24 *Manufacturing date: year-month*

Up to 33 characters of the extended order code are indicated on the nameplate. If the extended order code contains additional characters, these cannot be displayed.

However, the complete extended order code can also be displayed via the device operating menu: **Extended order code 1 to 3** parameter

5 Installation

5.1 Installation conditions

5.1.1 Installation types

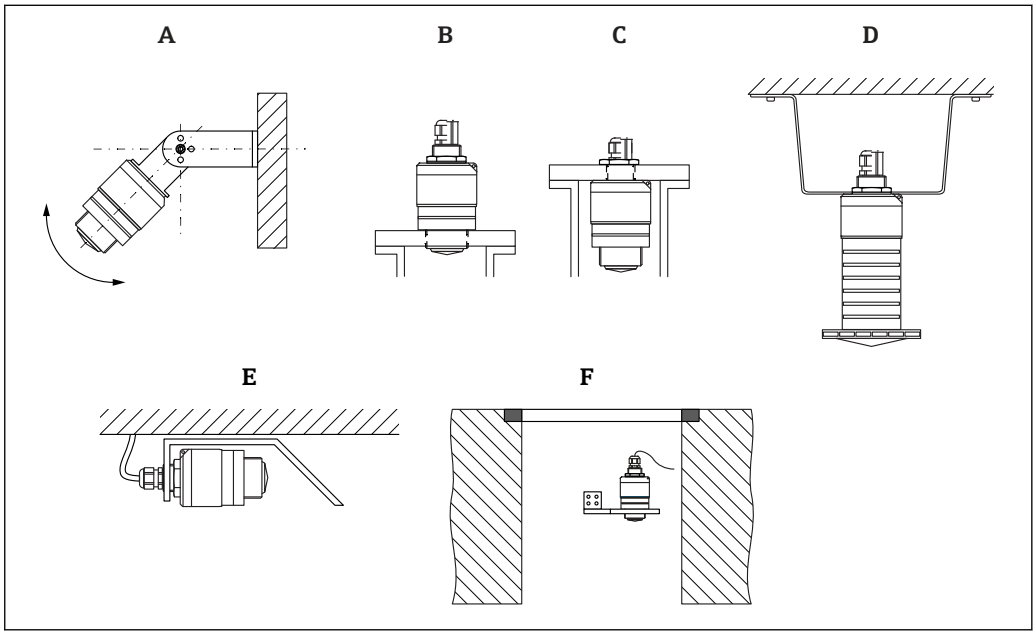

3 *Wall, ceiling or nozzle installation*

A Wall or ceiling mount, adjustable
B Mounted at front thread
C Mounted at rear thread
D Ceiling installation with counter nut (included in delivery)
E Horizontal installation in confined spaces (sewer shaft)
F Shaft wall mounting

Caution!
- The sensor cables are not designed as supporting cables. Do not use them for suspension purposes.
- Always operate the device in a vertical position in free-space applications.

5.1.2 Nozzle installation

The antenna should be located out of the nozzle for optimum measurement. The interior of the nozzle must be smooth and may not contain any edges or welded joints. The edge of the nozzle should be rounded if possible.

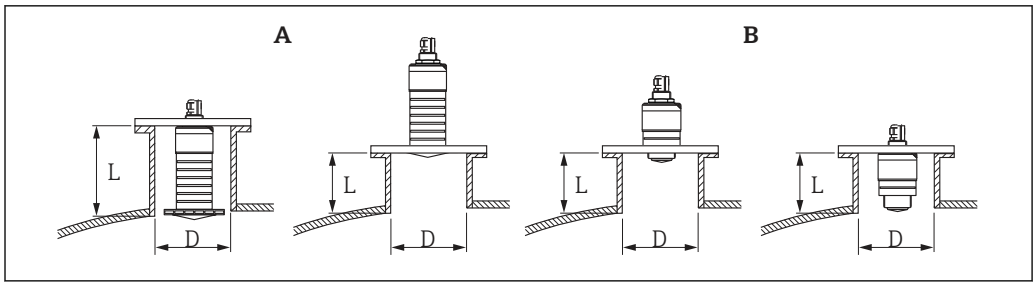

4 *Nozzle installation*

A 80 mm (3 in) antenna
B 40 mm (1.5 in) antenna

The maximum length of the nozzle **L** depends on the nozzle diameter **D**.

Please note the limits for the diameter and length of the nozzle.

80 mm (3 in) antenna, installation inside nozzle
- D: min. 120 mm (4.72 in)
- L: max. 205 mm (8.07 in) + D × 4.5

80 mm (3 in) antenna, installation outside nozzle
- D: min. 80 mm (3 in)
- L: max. D × 4.5

40 mm (1.5 in) antenna, installation outside nozzle
- D: min. 40 mm (1.5 in)
- L: max. D × 1.5

40 mm (1.5 in) antenna, installation inside nozzle
- D: min. 80 mm (3 in)
- L: max. 140 mm (5.5 in) + D × 1.5

5.1.3 Position for installation on a vessel

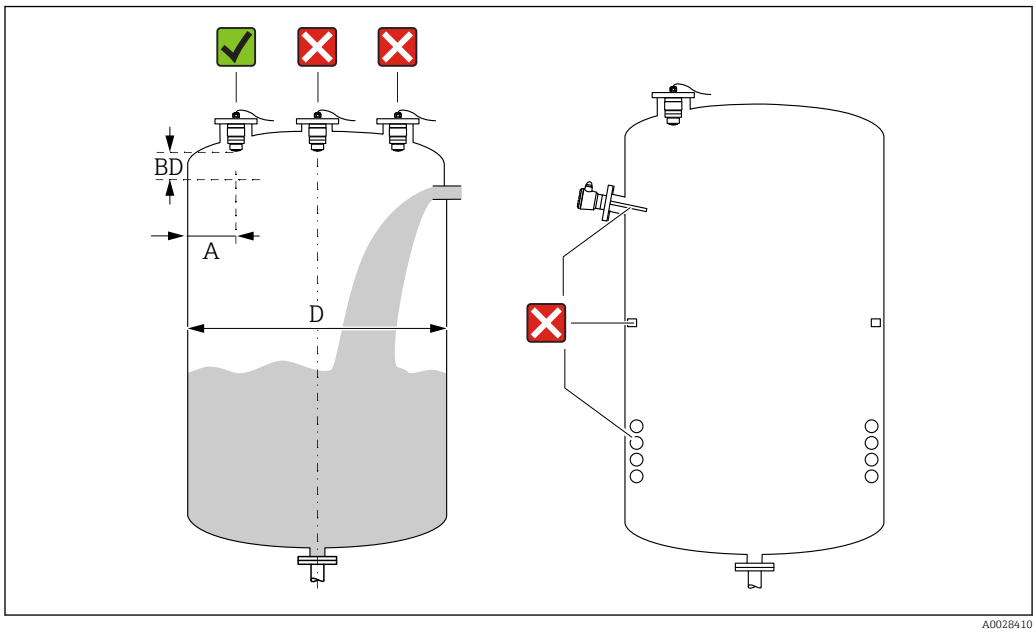

5 *Installation position on a vessel*

- If possible install the sensor so that its lower edge projects into the vessel.
- Recommended distance **A** wall - nozzle outer edge: ~ ⅙ of the vessel diameter **D**. Under no circumstances should the device be mounted closer than 15 cm (5.91 in) to the vessel wall.
- Do not install the sensor in the middle of the vessel.
- Avoid measurements through the filling curtain.
- Avoid equipment such as limit switches, temperature sensors, baffles, heating coils etc.
- No signals are evaluated within the Blocking distance (BD). It can therefore be used to suppress interference signals (e.g. the effects of condensate) in the vicinity of the antenna.
  An automatic Blocking distance of at least 0.1 m (0.33 ft) is configured as standard. However, this can be overwritten manually (0 m (0 ft) is also permitted).
  Automatic calculation:
  Blocking distance = Empty calibration - Full calibration - 0.2 m (0.656 ft).
  Each time a new entry is made in the **Empty calibration** parameter or **Full calibration** parameter, the **Blocking distance** parameter is recalculated automatically using this formula.
  If the result of the calculation is a value < 0.1 m (0.33 ft), the Blocking distance of 0.1 m (0.33 ft) will continue to be used.

5.1.4 Device alignment for installation on a vessel

- Align the antenna vertically to the product surface.
- Align the eyelet with lug towards the vessel wall as well as possible.

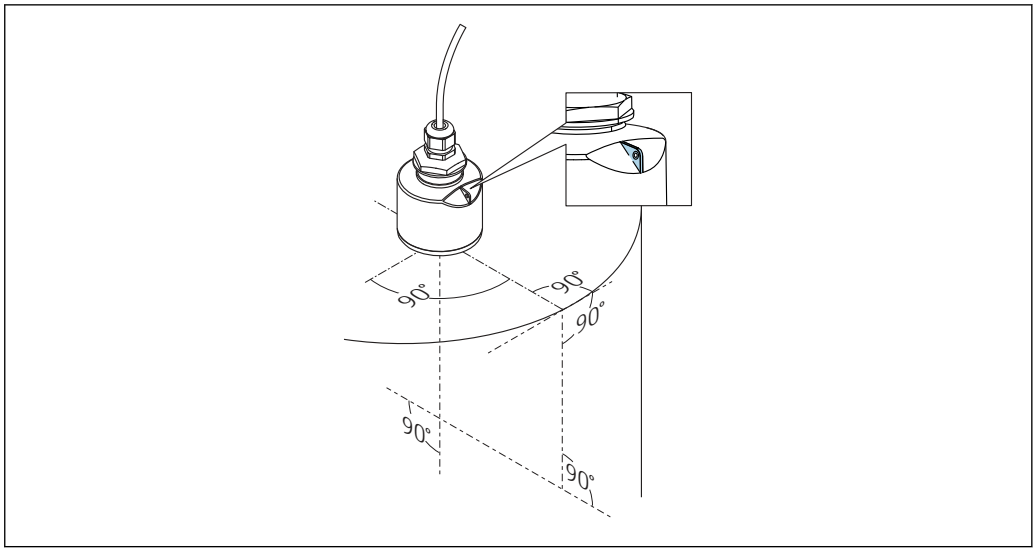

6 *Device alignment for installation on a vessel*

5.1.5 Beam angle

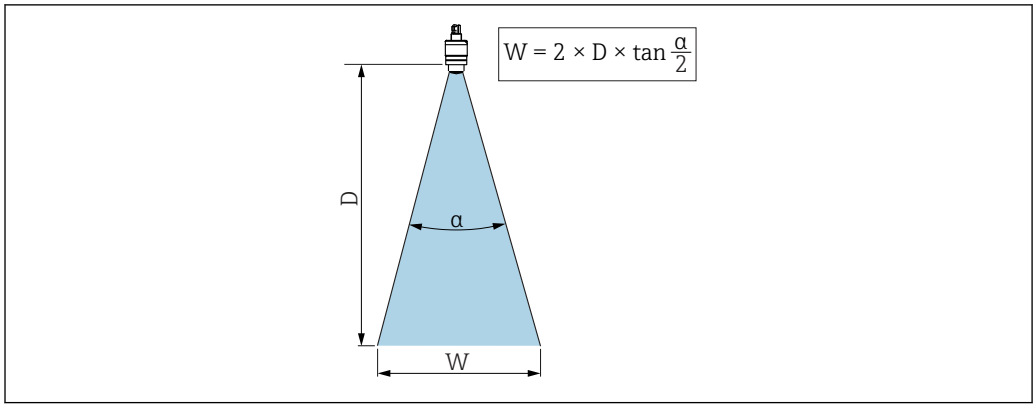

7 *Relationship between beam angle α, distance D and beamwidth diameter W*

The beam angle is defined as the angle **α**, at which the power density of the radar waves reaches half the value of the maximum power density (3 dB width). Microwaves are also emitted outside the signal beam and can be reflected off interfering installations.

Beam diameter **W** as a function of beam angle **α** and distance **D**.

40 mm (1.5 in) antenna, α 30 °
W = D × 0.54

40 mm (1.5 in) antenna with flooding protection tube, α 12 °
W = D × 0.21

80 mm (3 in) antenna with or without flooding protection tube, α 12 °
W = D × 0.21

5.1.6 Measurement in plastic vessels

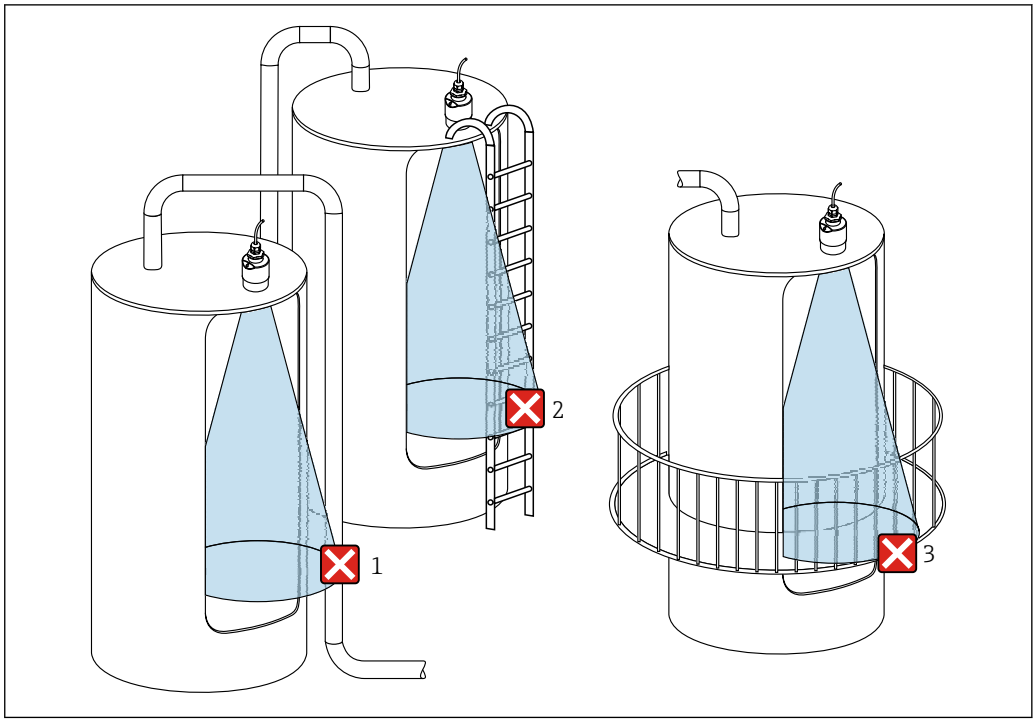

8 *Measurement in a plastic vessel with a metallic, interfering installation outside of the vessel*

1 *Pipe, tubing*
2 *Ladder*
3 *Grate, railing*

If the outer wall of the vessel is made of a non-conductive material (e.g. GFR), microwaves can also be reflected by interfering installations outside of the vessel.

Please ensure there are no interfering installations made of a conductive material in the signal beam (see the beam angle section for information on calculating the beamwidth diameter).

Please contact the manufacturer for further information.

5.1.7 Protective hood

For outdoor use, a protective hood is recommended.

The protective hood can be ordered as an accessory or together with the device via the product structure "Accessory enclosed".

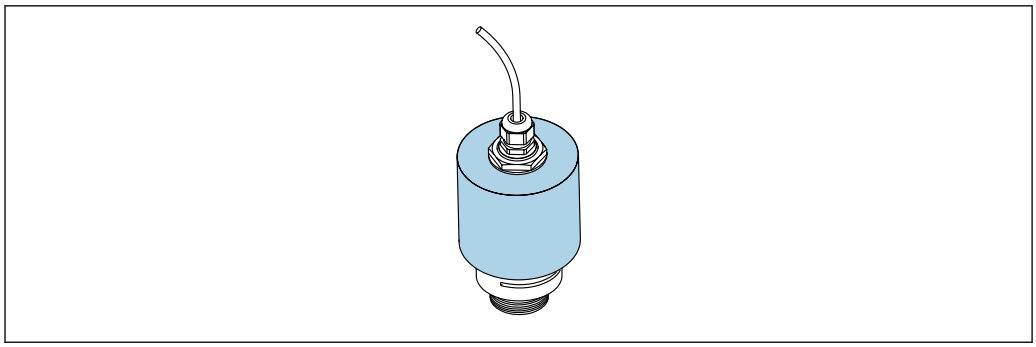

9 *Protective hood, e.g. with 40 mm (1.5") antenna*

The sensor is not completely covered by the protective hood.

5.1.8 Using the flooding protection tube

The flooding protection tube ensures the sensor measures the maximum level even if it is completely flooded.

In free-field installations and/or in applications where there is a risk of flooding, the flooding protection tube must be used.

The flooding protection tube can be ordered as an accessory or together with the device via the product structure "Accessory enclosed".

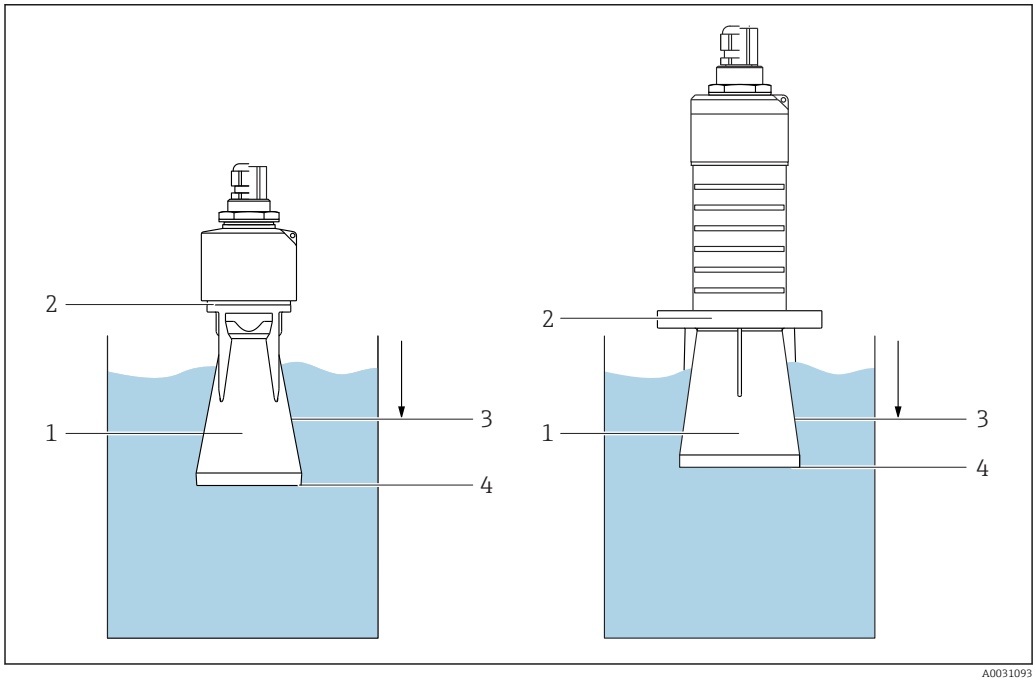

10 *Function of flooding protection tube*

1 *Air pocket*
2 *O-ring (EPDM) seal*
3 *Blocking distance*
4 *Max. level*

The tube is screwed directly onto the sensor and seals off the system by means of an O-ring making it air-tight. In the event of flooding, the air pocket that formed in the tube ensures the measurement of the maximum level at the end of the tube. Due to the fact that the Blocking distance is inside the tube, multiple echoes are not analyzed.

Configuration parameters for flooding protection tube

Configuring the blocking distance when using the flooding protection tube

▶ Navigate to: Main menu → Setup → Advanced setup → Blocking distance
↳ Enter 100 mm (4 in).

Perform a mapping after the flooding protection tube has been installed and the blocking distance has been configured

1. Navigate to: Setup → Confirm distance
   ↳ Compare the distance displayed with the actual value in order to start the recording of an interference echo map.
2. Navigate to: Setup → Mapping end point
   ↳ This parameter determines the distance up to which the new mapping is to be recorded.
3. Navigate to: Setup → Present mapping
   ↳ Displays the distance up to which a mapping has already been recorded.

5.1.9 Installation with mounting bracket, adjustable

The mounting bracket can be ordered as an accessory or together with the device via the product structure "Accessory enclosed".

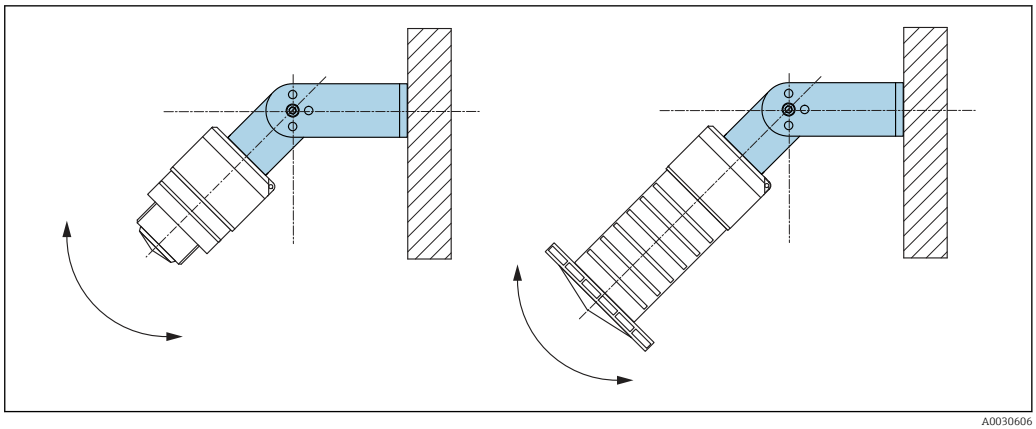

11 *Installation with mounting bracket, adjustable*

- Wall or ceiling installation is possible.
- Using the mounting bracket, position the antenna so that it is perpendicular to the product surface.

NOTICE

There is no conductive connection between the mounting bracket and transmitter housing.
Electrostatic charging possible.
▶ Integrate the mounting bracket in the local potential equalization system.

5.1.10 Cantilever installation, with pivot

The cantilever, wall bracket and mounting frame are available as accessories.

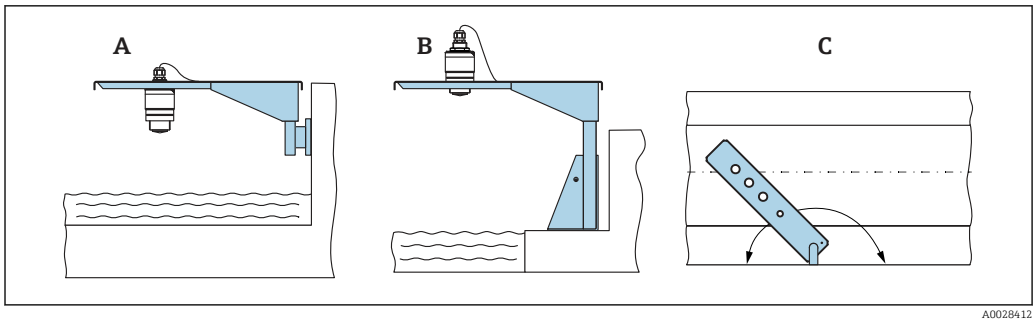

12 *Cantilever installation, with pivot*

A Cantilever with wall bracket
B Cantilever with mounting frame
C Cantilever can be turned (e.g., in order to position the device over the center of the flume)

5.1.11 Installation of horizontal mounting bracket for sewer shafts

The horizontal mounting bracket for sewer shafts is available as an accessory.

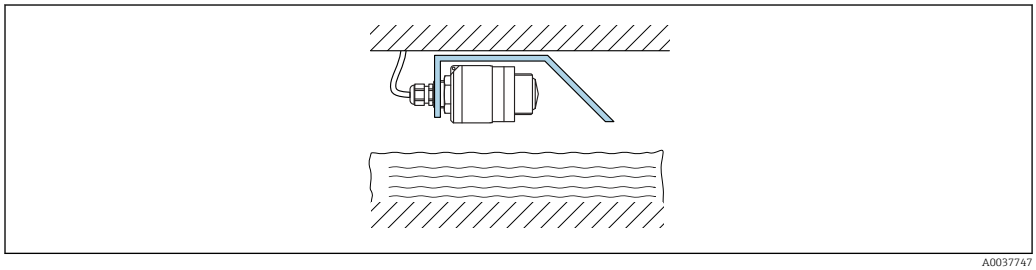

13 *Installation of horizontal mounting bracket for sewer shafts*

5.1.12 Mounting in a shaft

The pivoted mounting bracket is available as an accessory.

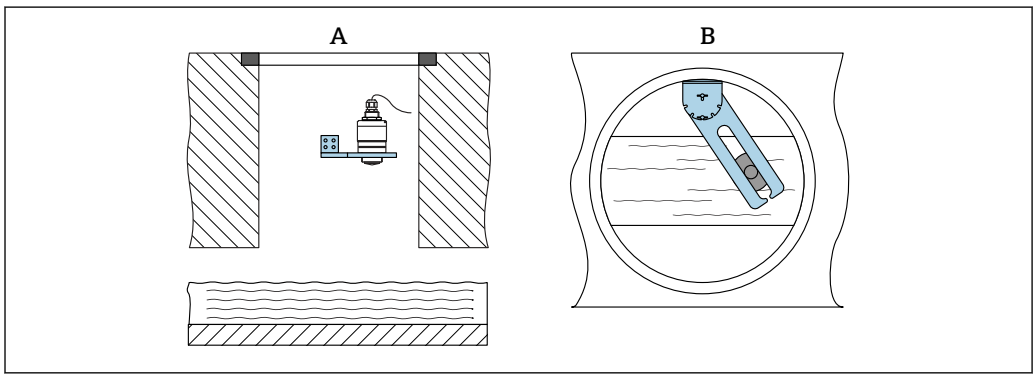

14 *Mounting in a shaft, pivotable and adjustable*

A Arm with wall bracket
B Pivotable and adjustable arm (e.g. to align the device with the center of a channel)

5.2 Post-installation check

❑ Is the device or cable undamaged (visual inspection)?

❑ Is the device adequately protected from wet conditions and direct sunlight?

❑ Is the device properly secured?

6 Electrical connection

6.1 Cable assignment

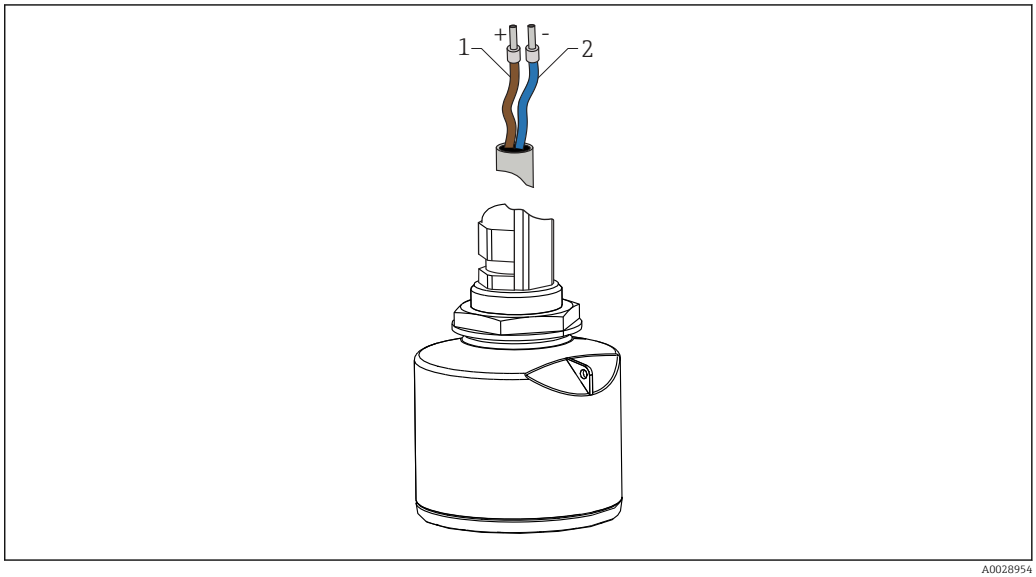

15 *Cable assignment*

1 *Plus, brown wire*
2 *Minus, blue wire*

6.2 Supply voltage

10.5 to 30 V_{DC}

An external power supply is necessary.

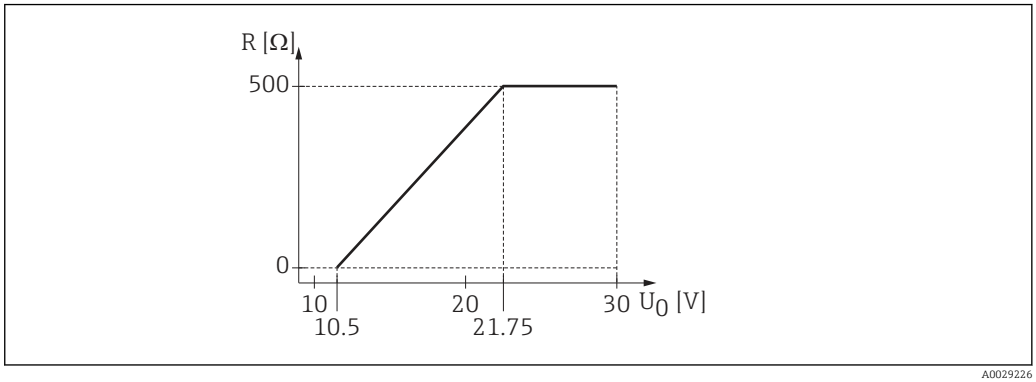

16 *Maximum load R, depending on supply voltage U_0 of power supply unit*

Battery operation
The sensor's *Bluetooth*® wireless technology communication can be disabled to increase the operating life of the battery.

Potential equalization
No special measures for potential equalization are required.

Various power supply units can be ordered as an accessory from Endress+Hauser.

6.3 Connecting the device

6.3.1 4 to 20 mA HART block diagram

Connection of the device with HART communication, power source and 4 to 20 mA display

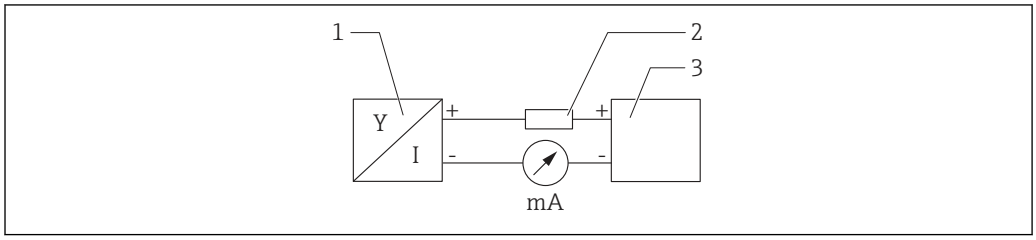

17 *Block diagram of HART connection*

1 Device with HART communication
2 HART resistor
3 Power supply

The HART communication resistor of 250 Ω in the signal line is always necessary in the case of a low-impedance power supply.

The voltage drop to be taken into account is:
Max. 6 V for 250 Ω communication resistor

6.3.2 HART device block diagram, connection with RIA15

FMR20 with RIA15 (incl. option for FMR20 basic configuration)

The RIA15 remote indicator can be ordered together with the device.

Product structure, feature 620 "Accessory enclosed":
- Option R4 "Remote indicator RIA15 non-hazardous area, field housing"
- Option R5 "Remote indicator RIA15 with explosion protection approval, field housing"

Alternatively available as an accessory, for details see Technical Information TI01043K and Operating Instructions BA01170K

Terminal assignment RIA15
- **+**
  Positive connection, current measurement
- **-**
  Negative connection, current measurement (without backlighting)
- **LED**
  Negative connection, current measurement (with backlighting)
- ⏚
  Functional grounding: Terminal in housing

The RIA15 process indicator is loop-powered and does not require any external power supply.

The voltage drop to be taken into account is:
- ≤1 V in the standard version with 4 to 20 mA communication
- ≤1.9 V with HART communication
- and an additional 2.9 V if display light is used

Connection of the HART device and RIA15 without backlighting

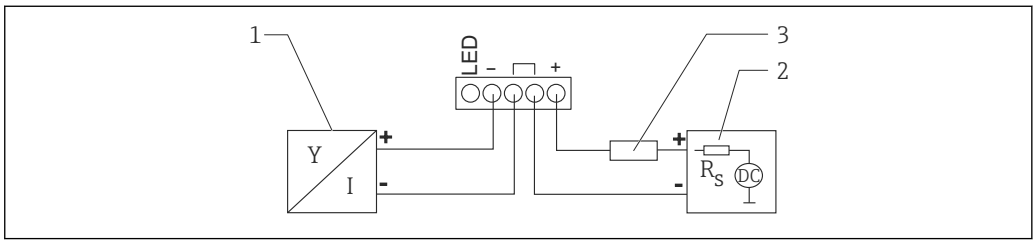

18 *Block diagram of HART device with RIA15 process indicator without light*

1 *Device with HART communication*
2 *Power supply*
3 *HART resistor*

Connection of the HART device and RIA15 with backlighting

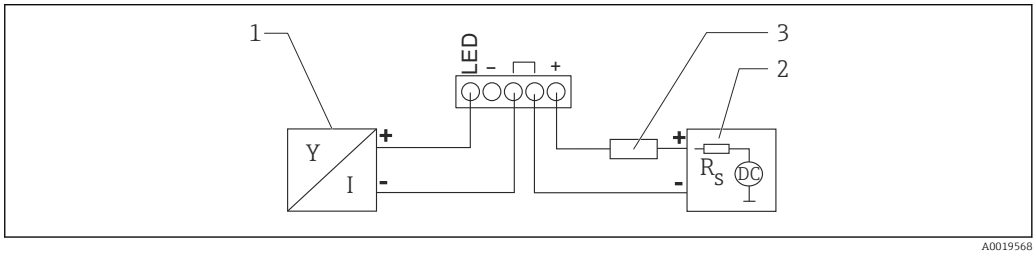

19 *Block diagram of HART device with RIA15 process indicator with light*

1 *Device with HART communication*
2 *Power supply*
3 *HART resistor*

6.3.3 Block diagram of HART device, RIA15 with installed HART communication resistor module

The HART communication module for installation in the RIA15 can be ordered together with the device.

Product structure, feature 620 "Accessory enclosed":
Option R6 "HART communication resistor hazardous / non-hazardous area"

The voltage drop to be taken into account is:
Max. 7 V

Alternatively available as an accessory, for details see Technical Information TI01043K and Operating Instructions BA01170K

Connection of the HART communication resistor module, RIA15 without backlighting

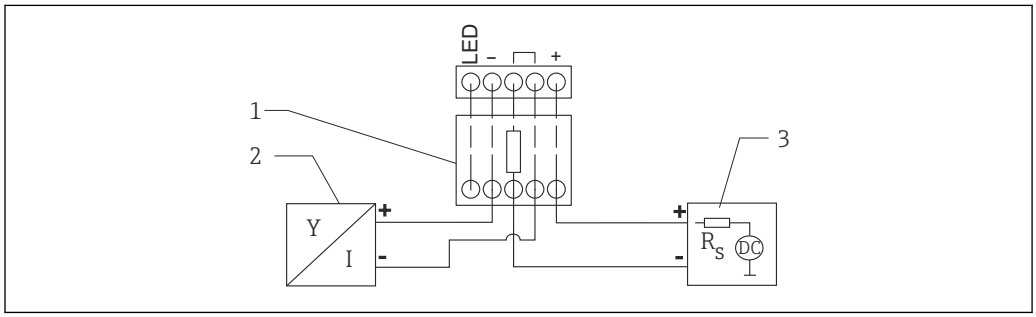

20 Block diagram of HART device, RIA15 without light, HART communication resistor module

1 HART communication resistor module
2 Device with HART communication
3 Power supply

Connection of the HART communication resistor module, RIA15 with backlighting

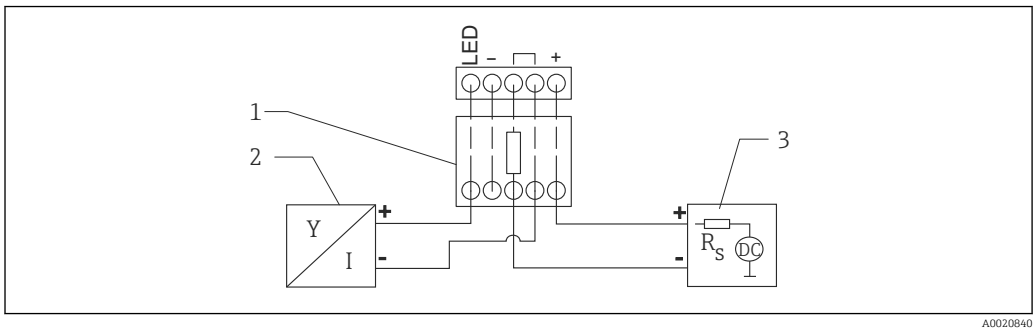

21 Block diagram of HART device, RIA15 with light, HART communication resistor module

1 HART communication resistor module
2 Device with HART communication
3 Power supply

6.4 Post-connection check

❑ Is the device or cable undamaged (visual inspection)?

❑ Do the mounted cables have adequate strain relief?

❑ Are the cable glands mounted and firmly tightened?

❑ Does the supply voltage match the specifications on the nameplate?

❑ No reverse polarity, is terminal assignment correct?

❑ Has the voltage drop across the process indicator and communication resistor been taken into account?

7 Operability

7.1 Operating concept

- 4 to 20 mA, HART
- Menu guidance with brief explanations of the individual parameter functions in the operating tool
- Optional: SmartBlue (app) via *Bluetooth*® wireless technology

7.2 Operation via Bluetooth® wireless technology

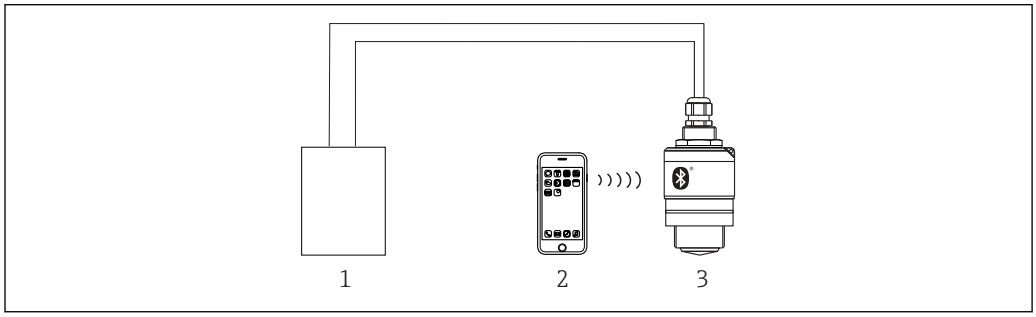

22 Possibilities for remote operation via Bluetooth® wireless technology

1 Transmitter power supply unit
2 Smartphone/tablet with SmartBlue (app)
3 Transmitter with Bluetooth® wireless technology

7.3 Via HART protocol

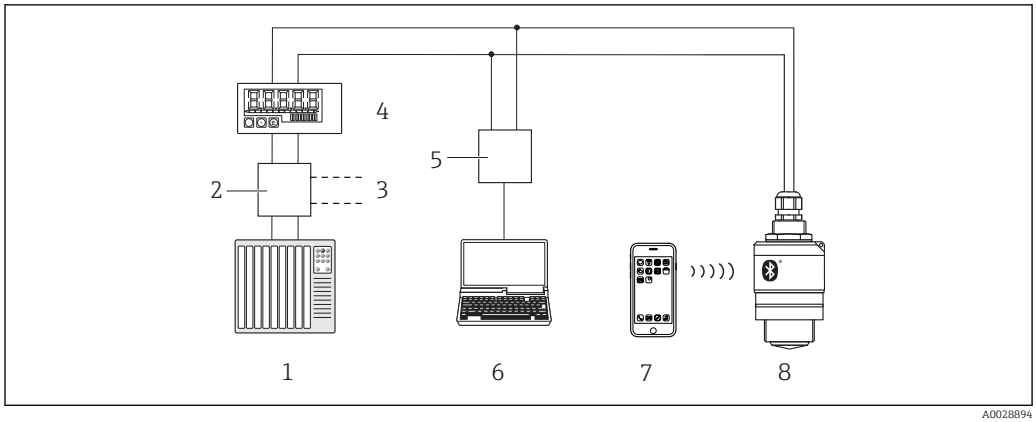

23 Options for remote operation via HART protocol

1 PLC (programmable logic controller)
2 Transmitter power supply unit, e.g. RN221N (with communication resistor)
3 Connection for Commubox FXA195
4 Loop-powered RIA15 process indicator
5 Commubox FXA195 (USB)
6 Computer with operating tool (FieldCare, DeviceCare)
7 Smartphone / tablet with SmartBlue (app)
8 Transmitter with Bluetooth® wireless technology

8 System integration via HART protocol

8.1 Overview of the device description files

Manufacturer ID
17 (0x11)

Device type ID
44 (0x112c)

HART specification
7.0

8.2 Measured variables via HART protocol

The following measured values are assigned to the HART variables:

Primary variable (PV)
Level linearized (PV)

Secondary variable (SV)
Distance (SV)

Tertiary variable (TV)
Relative echo amplitude (TV)

Quaternary variable (QV)
Temperature (QV)

9 Commissioning and operation

9.1 Installation and function check

Perform the post-installation check and the post-connection check prior to commissioning.

9.1.1 Post-installation check

❑ Is the device or cable undamaged (visual inspection)?

❑ Is the device adequately protected from wet conditions and direct sunlight?

❑ Is the device properly secured?

9.1.2 Post-connection check

❑ Is the device or cable undamaged (visual inspection)?

❑ Do the mounted cables have adequate strain relief?

❑ Are the cable glands mounted and firmly tightened?

❑ Does the supply voltage match the specifications on the nameplate?

❑ No reverse polarity, is terminal assignment correct?

9.2 Commissioning via SmartBlue (App)

9.2.1 Device requirements

Commissioning via SmartBlue is only possible if the device has Bluetooth capability (Bluetooth module installed at the factory prior to delivery or retrofitted).

9.2.2 SmartBlue system requirements

SmartBlue system requirements

SmartBlue is available as a download from the Google Play Store for Android devices and from the iTunes Store for iOS devices.

- Devices with iOS:
  iPhone 4S or higher from iOS 9; iPad 2 or higher from iOS 9; iPod touch 5th generation or higher from iOS 9
- Devices with Android:
  From Android 4.4 KitKat and *Bluetooth*® 4.0

9.2.3 SmartBlue App

1. Scan the QR code or enter "SmartBlue" in the search field of the App Store.



24 Download link

2. Start SmartBlue.
3. Select device from livelist displayed.

4. Enter the login data:
   ↳ User name: admin
   Password: serial number of the device
5. Tap the icons for more information.

After logging in for the first time, change the password!

9.2.4 Envelope curve display in SmartBlue

Envelope curves can be displayed and recorded in SmartBlue.

In addition to the envelope curve, the following values are displayed:
- D = Distance
- L = Level
- A = Absolute amplitude

- With screenshots, the displayed section (zoom function) is saved
- With video sequences, the whole area without zoom function is saved all the time

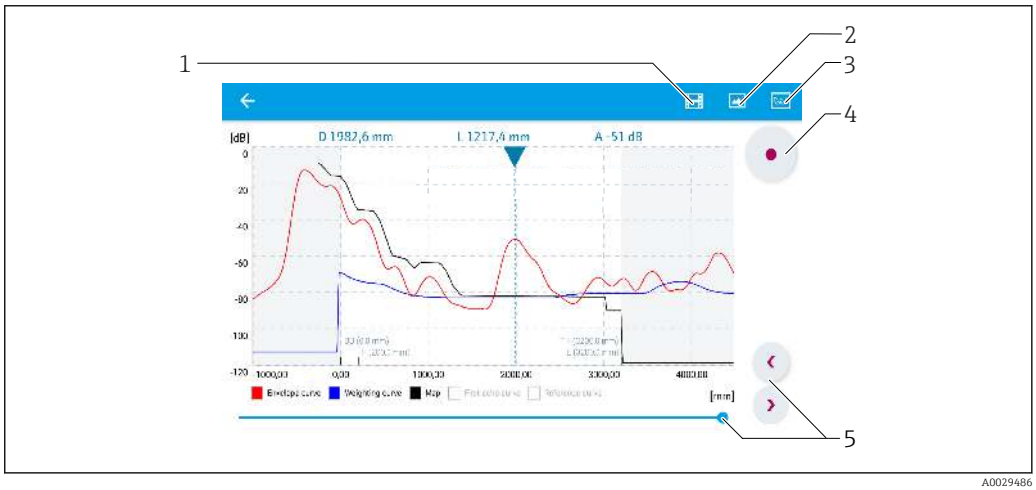

25 *Envelope curve display (sample) in SmartBlue for Android*

1 *Record video*
2 *Create screenshot*
3 *Display mapping menu*
4 *Start/stop video recording*
5 *Move time on time axis*

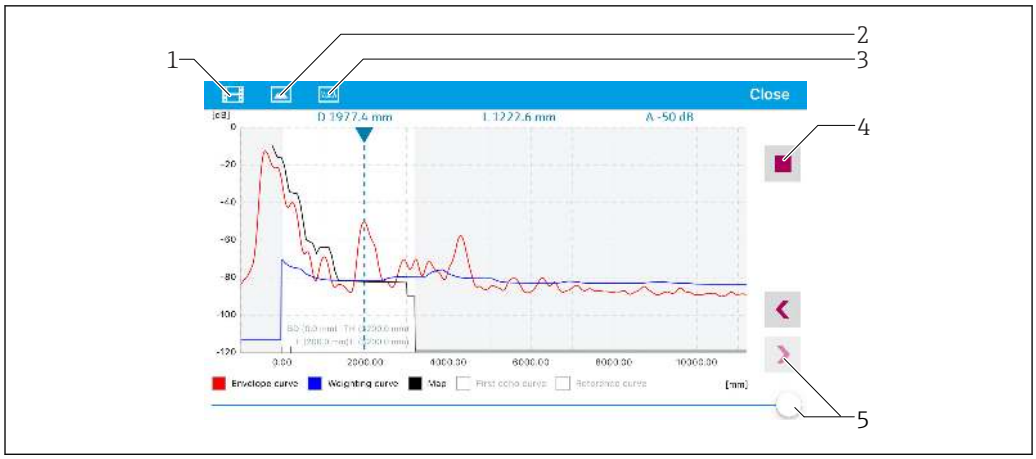

A0029487

26 *Envelope curve display (sample) in SmartBlue for iOS*

1 *Record video*
2 *Create screenshot*
3 *Display mapping menu*
4 *Start/stop video recording*
5 *Move time on time axis*

9.3 Operation and settings via RIA15

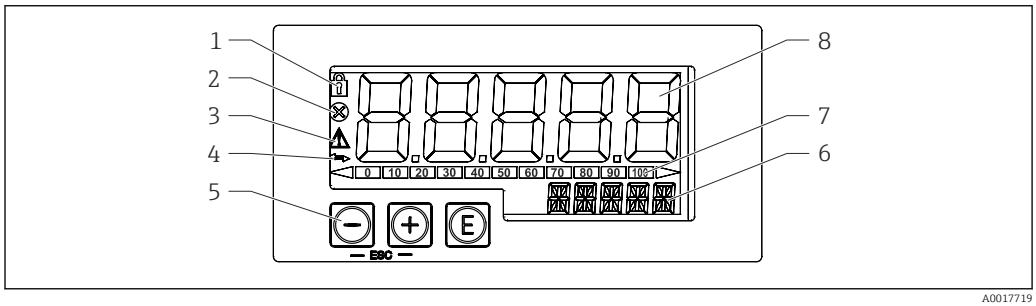

A0017719

27 *Display and operating elements of the process indicator*

1 *Symbol: operating menu disabled*
2 *Symbol: error*
3 *Symbol: warning*
4 *Symbol: HART communication active*
5 *Operating keys*
6 *14-segment display for unit/TAG*
7 *Bar graph with indicators for under range and over range*
8 *5-digit 7-segment display for measured value, digit height 17 mm (0.67 in)*

The device is operated using three operating keys on the front of the housing. The device setup can be disabled with a 4-digit user code. If the setup is disabled, a padlock symbol appears on the display when an operating parameter is selected.

Ⓔ
Enter key; calling up the operating menu, confirming the option/setting parameters in the operating menu

⊕ / ⊖
Selecting and setting/changing values in the operating menu; pressing the '+' and '-' keys simultaneously takes the user back up a menu level. The configured value is not saved.

9.3.1 Operating functions

The operating functions of the process indicator are divided into the following menus. The individual parameters and settings are described in the "Commissioning" section.



If the operating menu is disabled by means of a user code, the individual menus and parameters can be displayed but not changed. To change a parameter, the user code must be entered. As the display unit can only display digits in the 7-segment display and not alphanumeric characters, the procedure for number parameters is different to that for text parameters. If the operating position contains only numbers as parameters, the operating position is displayed in the 14-segment display and the configured parameter is displayed in the 7-segment display. To edit, press the E button and then enter the user code. If the operating position contains text parameters, only the operating position is initially displayed in the 14-segment display. If the E button is pressed again, the configured parameter is displayed in the 14-segment display. To edit, press the + button and then enter the user code.

Setup (SETUP)
Basic device settings

Diagnostics (DIAG)
Device information, display of error messages

Expert (EXPRT)
Expert settings for device setup. The Expert menu is protected from editing by an access code (default 0000).

9.3.2 Operating modes

The process indicator can be used in two different operating modes:

- 4 to 20 mA mode:
  In this operating mode, the process indicator is incorporated into the 4 to 20 mA current loop and measures the transmitted current. The variable calculated based on the current value and range limits is displayed in digital form on the 5-digit LCD. In addition, the associated unit and a bar graph can be displayed. In this operating mode, the measured value corresponds to 0 to 100 %
- HART mode:
  The indicator is powered via the current loop.
  The device can be adjusted under the "Level" menu (see operating matrix). The measured value displayed corresponds to the distance measured or, if linearization is enabled, to a percentage value.
  HART communication operates according to the master/slave principle.
  In the HART loop, the process indicator has the option of functioning either as a primary master or as a secondary master (default). When it functions as a master, the device can read process values from the measuring device and display them.
  In HART mode, the process indicator can display up to four device variables of a multivariable measuring device. These variables are referred to as the Primary Variable (PV), Secondary Variable (SV), Tertiary Variable (TV) and Quaternary Variable (QV). These variables are placeholders for measured values that can be retrieved using HART communication.

As a general rule, the sensor is a slave and transmits information only if a request has been made by the master. A HART loop can have a maximum of two HART masters at any one time. With these HART masters, a distinction is made between the primary master (e.g. the distributed control system) and the secondary master (e.g. handheld terminal for local operation of the measuring devices). The two masters in the loop/in the network cannot be masters of the same type, e.g. they cannot be two "secondary masters". If a third HART master is added to the network, one of the other masters must be disabled; otherwise a collision occurs in the network. If the process indicator (RIA15) is operating as a "secondary master", for example, and another "secondary master" (e.g. a handheld device) is added to the network, the device interrupts HART communication as soon as it detects the presence of another "secondary master". The display alternates between error message C970 "Multi master collision" and "- - -". A measured value is not displayed in this case. The device leaves the HART loop for 30 seconds and then tries to re-establish HART communication once again. Once the additional "secondary master" is removed from the network, the device continues communication and displays the measured values of the sensor/actuator once more.

9.3.3 Operating matrix

After power-up:

- Press the E key twice
  - The "Level" menu is then available

MENU SETUP -> LEVEL		
Parameters	**Values**	**Description**
UNIT	m	Select the displayed unit
	FT	
EMPTY	Numeric value 0 to 100 m, default 2 m	Empty calibration using keys +,−,E Enter distance from process connection to min. level
FULL	Numeric value 0.001 to 100 m, default 2 m	Empty calibration using keys +,−,E Enter span from max. level to min. level
DIST	Measured value (measured distance)	
MAP	DI OK	To be selected if the distance displayed matches the actual distance. The device then records a mapping.
	MAN	To be selected if the range of mapping is to be defined manually in the 'Mapping end point' parameter. A comparison between the distance displayed and the actual distance is not necessary in this case. Mapping becomes active after approx. 20 s.
	DI UN	To be selected if the actual distance is unknown. No mapping is recorded.
	FACT	To be selected if the present mapping curve (if one exists) is to be deleted. The device returns to the "Confirm distance" parameter and a new mapping can be recorded.
	The end point of the current mapping is not indicated in the RIA15. If a new mapping is performed ("DI OK" or "MAN"), the new mapping is superimposed on the existing mapping. In order to establish a defined state, perform a factory mapping ("FACT") if required. This deletes any previous mapping.	

Using the following operating matrix, a display in percent can be set. To do this, select "Mode" parameter => 4-20 and "Unit" parameter =>%

MENU SETUP			
Parameters	**Values**	**visible at**	**Description**
MODE	**4-20** HART		Select the operating mode for the indicator 4-20: The circuit's 4 to 20 mA signal is displayed HART: Up to four HART variables (PV, SV, TV, QV) per sensor/actuator can be displayed in the loop.
DECIM	0 DEC **1 DEC** 2 DEC 3 DEC 4 DEC	MODE = 4-20	Number of decimal places for display
SC__4	Numerical value –19 999 to 99 999 Default: **0.0**	MODE = 4-20	5-digit value (number of decimal places as configured under DECIM) for scaling the measured value at 4 mA Example: SC__4 = 0.0 => 0.0 displayed for measuring current of 4 mA The unit selected under UNIT is used to display the value.
SC_20	Numerical value –19 999 to 99 999 Default: **100.0**	MODE = 4-20	5-digit value (number of decimal places as configured under DECIM) for scaling the measured value at 20 mA Example: SC__20 = 100.0 => 100.0 displayed for measuring current of 20 mA The unit selected under UNIT is used to display the value.
UNIT	**%** °C °F K USER	MODE = 4-20	Use this function to select the unit for displaying the value. If "USER" is selected, a user-defined unit can be entered in the TEXT parameter.
TEXT	Customized text, 5-digit	MODE = 4-20	User-defined unit, only visible if the "USER" option has been selected under UNIT.

Any additional settings such as linearizations must be made using FieldCare, DeviceCare or SmartBlue

Additional information is available in the RIA15 Operating Instructions BA01170K

9.4 Configuring level measurement via operating software

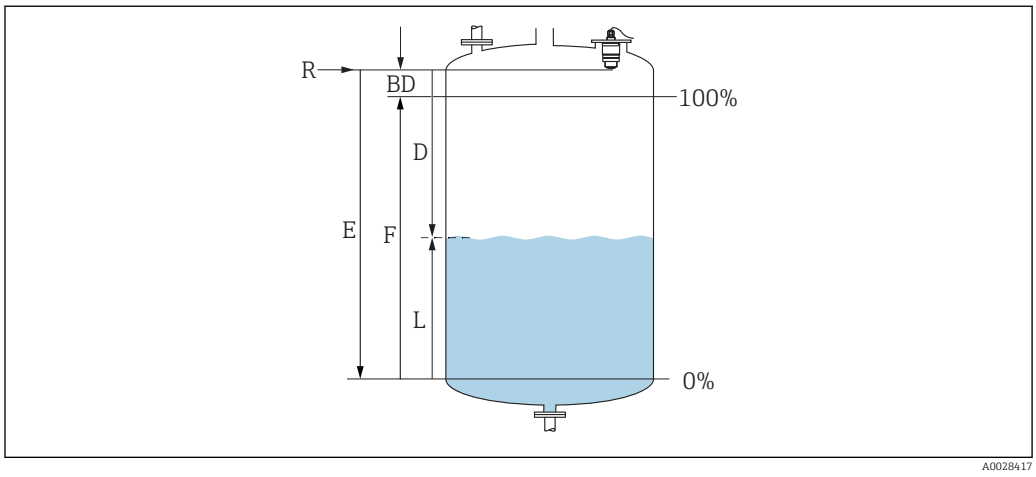

28 *Configuration parameters for level measurement in liquids*

R Reference point of measurement
D Distance
L Level
E Empty calibration (= zero point)
F Full calibration (= span)
BD Blocking distance

9.4.1 Via SmartBlue

1. Navigate to: Setup → Distance unit
   ↳ Select unit of length for distance calculation
2. Navigate to: Setup → Empty calibration
   ↳ Specify empty distance E (distance from reference point R to minimum level)
3. Navigate to: Setup → Full calibration
   ↳ Specify full distance F (span: max. level - min. level)
4. Navigate to: Setup → Distance
   ↳ Shows the distance D that is currently measured from the reference point (lower edge of flange / last sensor thread) to the level
5. Navigate to: Setup → Confirm distance
   ↳ Compare the distance displayed with the actual value in order to start the recording of an interference echo map
6. Navigate to: Setup → Mapping end point
   ↳ This parameter determines the distance up to which the new mapping is to be recorded
7. Navigate to: Setup → Present mapping
   ↳ Displays the distance up to which a mapping has already been recorded
8. Setup → Confirm distance
9. Navigate to: Setup → Level
   ↳ Shows the level L measured
10. Navigate to: Setup → Signal quality
    ↳ Displays the signal quality of the analyzed level echo

9.4.2 Displaying level value as %

With the combination of Full calibration and Empty calibration and with an output signal of 4 to 20 mA, the level value for 4 mA (=empty) and the level value for 20 mA (=full) can be determined directly in the unit of length used.

A standardized signal that is proportionate to the level, e.g. 0 to 100 % level, can be calculated with Full calibration. In turn, the two basic values of 0 % and 100 % can be assigned directly to the analog output values 4 mA and 20 mA.

X	Level	Y	Output signal as %
X1	0.00 m (0.00 ft)	Y1	0 %
X2	Value F (=Full)	Y2	100 %

Configuration using DeviceCare or FieldCare

1. Navigate to: Setup → Advanced setup → Linearization type
   ↳ Select table as the linearization type
2. Select linearization table
3. X1 = Specify level value in m / ft for 0 %
4. X2 = Specify level value in m / ft for 100 %
5. Confirm table as the linearization type

Configuration with SmartBlue

1. Navigate to: Main menu → Setup → Advanced setup → Linearization type
   ↳ Select table as the linearization type
2. Select linearization table
3. X1 = Specify level value in m / ft for 0 %
4. X2 = Specify level value in m / ft for 100 %
5. Activate linearization table

9.5 Configuring flow measurement via operating software

9.5.1 Installation conditions for flow measurement

- A channel or a weir is required for flow measurement
- Position the sensor in the center of the channel or weir
- Align the sensor so that it is perpendicular to the surface of the water
- Use a weather protection cover to protect the device from sunshine and rain
- It is recommended to use the "flooding protection sleeve" accessory

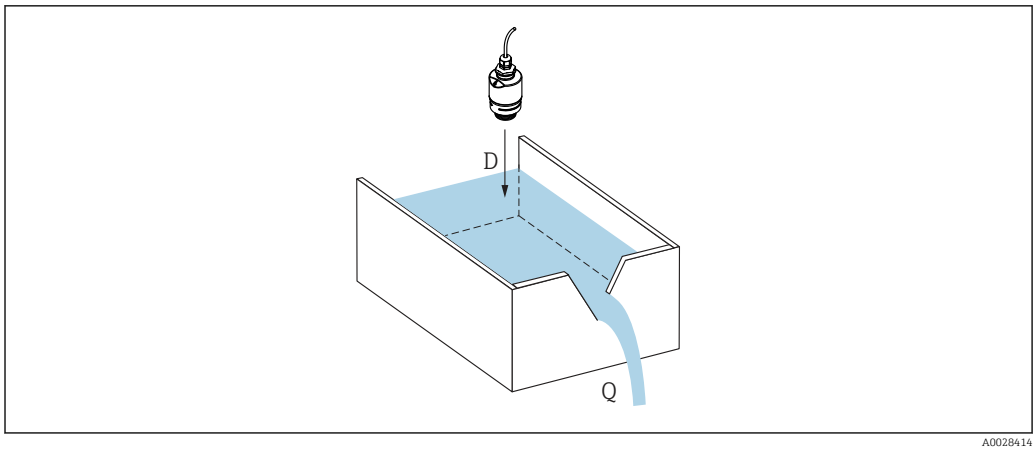

29 *Configuration parameters for the flow measurement of liquids*

D Distance
Q Flow rate at measuring weirs or channels (calculated from the level using linearization)

9.5.2 Flow measurement configuration

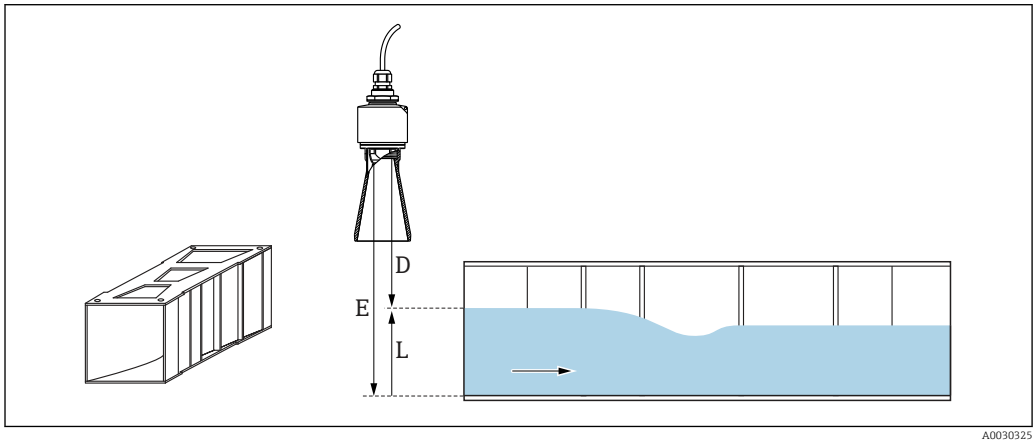

30 *Example: Khafagi-Venturi flume*

E Empty calibration (= zero point)
D Distance
L Level

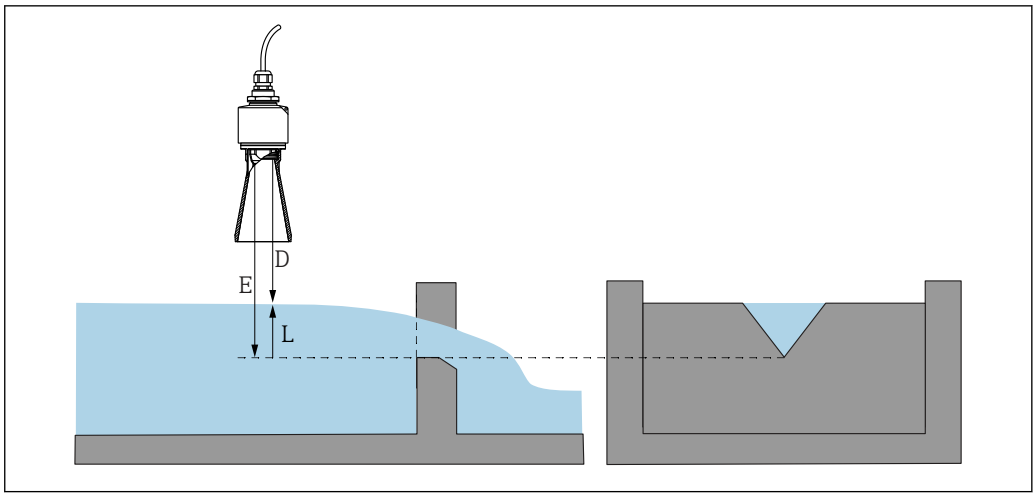

31 *Example: Triangular weir*

E Empty calibration (= zero point)
D Distance
L Level

Via SmartBlue app

1. Navigate to: Setup → Distance unit
   ↳ Select unit of length for distance calculation.
2. Navigate to: Setup → Empty calibration
   ↳ Specify empty distance E (distance from reference point R to the zero point of the weir or channel)
   In the case of channels, the zero point is at the narrowest point of the floor.
3. Navigate to: Setup → Full calibration
   ↳ Specify the maximum level (span: max. level - min. level)
4. Navigate to: Setup → Distance
   ↳ Shows the distance D that is currently measured from the reference point (lower edge of sensor) to the level.
5. Navigate to: Setup → Confirm distance
   ↳ Compare the distance displayed with the actual value to start recording an interference echo map.
6. Navigate to: Setup → Mapping end point
   ↳ This parameter determines the distance up to which the new mapping is to be recorded.
7. Navigate to: Setup → Present mapping
   ↳ Displays the distance up to which a mapping has already been recorded.

Configuring the blocking distance when using the flooding protection tube

▶ Navigate to: Main menu → Setup → Advanced setup → Blocking distance
↳ Enter 100 mm (4 in).

Linearization via DeviceCare / FieldCare

1. Select the linearization table
2. Start the QH program
3. Save the calculated data and then write them to the device

Linearization via SmartBlue

1. Navigate to: Setup → Advanced setup
   ↳ Linearization table
2. Select the length unit
3. Select the unit after linearization
4. Select the Linearization type table
5. Select the "Manual" table mode
6. Enter the value pairs (maximum 32) manually in the table. The table must be in the "disabled" mode in this context
7. Activate table

9.6 Data access - Security

9.6.1 Software locking via access code in FieldCare / DeviceCare

The configuration data can be write-protected using an access code (software locking)

▶ Navigate to: Setup → Advanced setup → Administration → Define access code → Confirm access code

You must enter an access code that is different from the last access code and "0000"

- The access code is only active if a different (wrong) code is entered or the device is deenergized.
- Once the access code has been defined, write-protected devices can only be switched to maintenance mode if the access code is entered in the **Enter access code** parameter. If the factory setting is not changed or if "0000" is entered, the device is in maintenance mode and its configuration data are therefore **not** write-protected and can be changed at any time.

9.6.2 Unlocking via FieldCare / DeviceCare

▶ Navigate to: Setup → Advanced setup → Enter access code

9.6.3 Software locking via access code in SmartBlue

The configuration data can be write-protected using an access code (software locking).

▶ Navigate to: Setup → Advanced setup → Administration → Administration1 → Define access code → Confirm access code

The new access code must differ from the last access code used and may not be "0000".

- The access code is only active if a different (wrong) code is entered or the device is deenergized.
- Once the access code has been defined, write-protected devices can only be switched to maintenance mode if the access code is entered in the **Enter access code** parameter. If the factory setting is not changed or if "0000" is entered, the device is in maintenance mode and its configuration data are therefore **not** write-protected and can be changed at any time.

9.6.4 Unlocking via SmartBlue

▶ Navigate to: Setup → Advanced setup → Access status tooling → Enter access code

9.6.5 Bluetooth® wireless technology

Signal transmission via Bluetooth® wireless technology uses a cryptographic technique tested by the Fraunhofer Institute

- The device is not visible via *Bluetooth*® wireless technology without the SmartBlue app
- Only one point-to-point connection between **one** sensor and **one** smartphone or tablet is established
- The *Bluetooth*® wireless technology interface can be disabled via SmartBlue, FieldCare and DeviceCare

Disabling the Bluetooth® wireless technology interface

▶ Navigate to: Setup → Communication → Bluetooth configuration → Bluetooth mode
↳ Switch off the *Bluetooth*® wireless technology interface. "Off" position disables remote access via app

Re-enabling the Bluetooth® wireless technology interface

If the *Bluetooth*® wireless technology interface has been disabled, it can be re-enabled via FieldCare / DeviceCare at any time
The *Bluetooth*® wireless technology interface is restarted 10 minutes after the device is switched on.

▶ Navigate to: Setup → Communication → Bluetooth configuration → Bluetooth mode
↳ Switch on the *Bluetooth*® wireless technology interface. "On" position enables remote access via app

Bluetooth recovery sequence

The *Bluetooth*® wireless technology interface can be re-enabled after performing the following recovery sequence:

1. Connect device to voltage supply
   ↳ After a waiting time of 10 minutes, a time window of 2 minutes opens
2. You can re-enable the *Bluetooth*® wireless technology interface of the device using the SmartBlue (app) during this time window
3. Navigate to: Setup → Communication → Bluetooth configuration → Bluetooth mode
   ↳ Switch on the *Bluetooth*® wireless technology interface. "On" position enables remote access via app

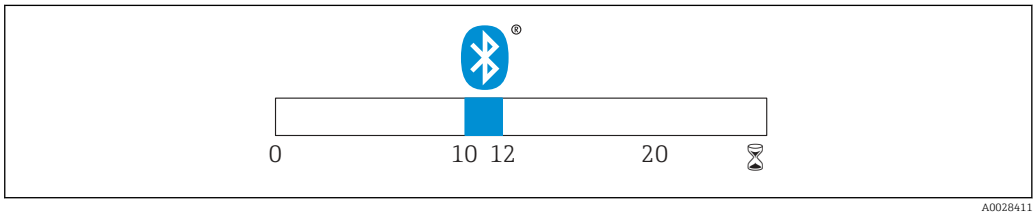

32 *Timeline for Bluetooth wireless technology recovery sequence, time in minutes*

9.6.6 RIA15 locking

The device setup can be locked with a 4-digit user code

Additional information is available in the Operating Instructions for the RIA15

10 Diagnostics and troubleshooting

10.1 General errors

Error	Possible cause	Solution
Device does not respond	Supply voltage does not match the specification on the nameplate	Apply correct voltage
	The polarity of the supply voltage is wrong	Correct the polarity
	The cables do not contact the terminals properly	Ensure electrical contact between the cable and the terminal
HART communication does not function	Communication resistor missing or incorrectly installed	Install the communication resistor (250 Ω) correctly
	Commubox is connected incorrectly	Connect Commubox correctly
	The communication resistor of the Commubox is switched on or off	Check the communication resistor and connections For details, see Technical Information TI00404F
Device measures incorrectly	Configuration error	▪ Check and correct the parameter configuration ▪ Carry out mapping
Display values not plausible (linearization)	SmartBlue and FieldCare/ DeviceCare active at the same time	Log off FieldCare/DeviceCare and disconnect or Log off SmartBlue and disconnect (connection via SmartBlue has priority)
Linearized output value not plausible	Linearization error	SmartBlue: Check linearization table FieldCare/DeviceCare: Check linearization table Check the vessel selection in the linearization module
RIA15 no display	The polarity of the supply voltage is wrong	Correct the polarity
	The cables do not contact the terminals properly	Ensure electrical contact between the cable and the terminal
	RIA15 defective	Replace RIA15
RIA15 start sequence keeps running through	Supply voltage too low	▪ Increase supply voltage ▪ Switch off backlight

10.2 Error - SmartBlue operation

Error	Possible cause	Solution
Device is not visible in the live list	No Bluetooth connection	Enable Bluetooth function on smartphone or tablet
		Bluetooth function of sensor disabled, perform recovery sequence
Device is not visible in the live list	The device is already connected with another smartphone/ tablet	Only **one** point-to-point connection is established between a sensor and a smartphone or tablet

Error	Possible cause	Solution
Device is visible in the live list but cannot be accessed via SmartBlue	Android end device	Is the location function permitted for the app, was it approved the first time?
		GPS or positioning function must be activated for certain Android versions in conjunction with Bluetooth
		Activate GPS - close the app fully and restart - enable the positioning function for the app
Device is visible in the live list but cannot be accessed via SmartBlue	Apple end device	Log in as standard Enter user name "admin" Enter initial password (device serial number) paying attention to lower/upper case
Login via SmartBlue not possible	Device is being put into operation for the first time	Enter initial password (device serial number) and change. Pay attention to lower/upper case when entering the serial number.
Device cannot be operated via SmartBlue	Incorrect password entered	Enter correct password
Device cannot be operated via SmartBlue	Password forgotten	Contact the Endress+Hauser Service department
Device cannot be operated via SmartBlue	The sensor temperature is too high	If the ambient temperature results in an elevated sensor temperature of >60 °C (140 °F), Bluetooth communication may be disabled. Shield the device, isolate it and cool it down if necessary.
TAG in SmartBlue and HART do not match	System-related	The device ID (TAG) is transferred to the live list via Bluetooth® to facilitate device identification. The tag is abbreviated in the middle since the HART tag can be up to 32 characters long but Bluetooth® can only use 29 characters as the device name: e.g: "FMR20N12345678901234567890123456" becomes "FMR20N12345678~567890123456"

10.3 Diagnostic event in the operating tool

If a diagnostic event is present in the device, the status signal appears in the top left status area of the operating tool along with the corresponding symbol for the event level in accordance with NAMUR NE 107:

- Failure (F)
- Function check (C)
- Out of specification (S)
- Maintenance required (M)

Calling up remedial measures

▶ Navigate to the **Diagnostics** menu
↳ In the **Actual diagnostics** parameter the diagnostic event is shown with event text

10.4 Diagnostic event in the RIA15

A diagnostic event of the FMR20 is not directly shown in the RIA15. The fault F911 only appears directly on the RIA15 in the event of an FMR20 alarm.

Displaying a FMR20 diagnostic event in the RIA15

1. Navigate to: DIAG/TERR
2. Press E
3. Press +
4. Press E

5. Press ⊞ 3 times
6. Press Ⓔ
   ↳ The diagnostic event from the FMR20 is shown on the RIA15 display.

10.5 List of diagnostic events

Diagnostic number	Short text	Remedy instructions	Status signal [from the factory]	Diagnostic behavior [from the factory]
Diagnostic of electronic				
270	Main electronic failure	Exchange device	F	Alarm
271	Main electronic failure	1. Restart device 2. If failure remains, exchange device.	F	Alarm
272	Main electronic failure	1. Restart device 2. Check enviroment for strong EMC fields 3. If failure remains, exchange device.	F	Alarm
283	Memory content	1. Transfer data or reset device 2. Contact service	F	Alarm
Diagnostic of configuration				
410	Data transfer	1. Check connection 2. Retry data transfer	F	Alarm
411	Up-/download active	Up-/download active, please wait	C	Warning
435	Linearization	Check linearization table	F	Alarm
438	Dataset	1. Check data set file 2. Check device configuration 3. Up- and download new configuration	M	Warning
441	Current output 1	1. Check process 2. Check current output settings	S	Warning
491	Current output 1 simulation	Deactivate simulation	C	Warning
585	Simulation distance	Deactivate simulation	C	Warning
586	Record map	Recording of mapping please wait	C	Warning
Diagnostic of process				
801	Energy too low	Increase supply voltage	S	Warning
825	Operating temperature	1. Check ambient temperature 2. Check process temperature	S	Warning
941	Echo lost	Check parameter 'Evaluation sensitivity'	S	Warning
941	Echo lost		F	Alarm

10.6 Overview of information events

Info number	Info name
I1000	--------(Device ok)

11 Maintenance

No special maintenance work is required.

11.1 Cleaning the antenna

The antenna may become contaminated depending on the application. Emission and reception of microwaves can thus be potentially hindered. The level of contamination leading to an error depends on the medium and on the reflectivity, mainly determined by the dielectric constant ε_r.

If the medium tends to cause contamination and buildup, cleaning on a regular basis is recommended.

- Care must be taken to ensure the device is not damaged in the process of mechanical or hose-down cleaning.
- Material compatibility must be taken into account if cleaning agents are used!
- Do not exceed maximum permitted temperatures.

11.2 Process seals

The process seals of the sensor (at the process connection) should be replaced periodically. The interval between changes depends on the frequency of the cleaning cycles, the cleaning temperature and the medium temperature.

12 Repair

12.1 General notes

12.1.1 Repair concept

The Endress+Hauser repair concept is devised in such a way that repairs can only be carried out through device replacement.

12.1.2 Replacing a device

After the device has been replaced, the parameters can be uploaded to the device via FieldCare/DeviceCare.

Condition: The configuration of the old device must have been saved using FieldCare / DeviceCare.

You can continue measuring without performing a new calibration. Only interference echo suppression may need to be carried out once again.

12.1.3 Return

The requirements for safe device return can vary depending on the device type and national legislation.

1. Refer to the website for more information:
   http://www.endress.com/support/return-material
2. Return the device if repairs or a factory calibration are required, or if the wrong device was ordered or delivered.

12.1.4 Disposal



If required by the Directive 2012/19/EU on waste electrical and electronic equipment (WEEE), the product is marked with the depicted symbol in order to minimize the disposal of WEEE as unsorted municipal waste. Do not dispose of products bearing this marking as unsorted municipal waste. Instead, return them to Endress+Hauser for disposal under the applicable conditions.

13 Accessories

13.1 Device-specific accessories

13.1.1 Protective cover

The protective cover can be ordered together with the device via the product structure "Accessory enclosed".

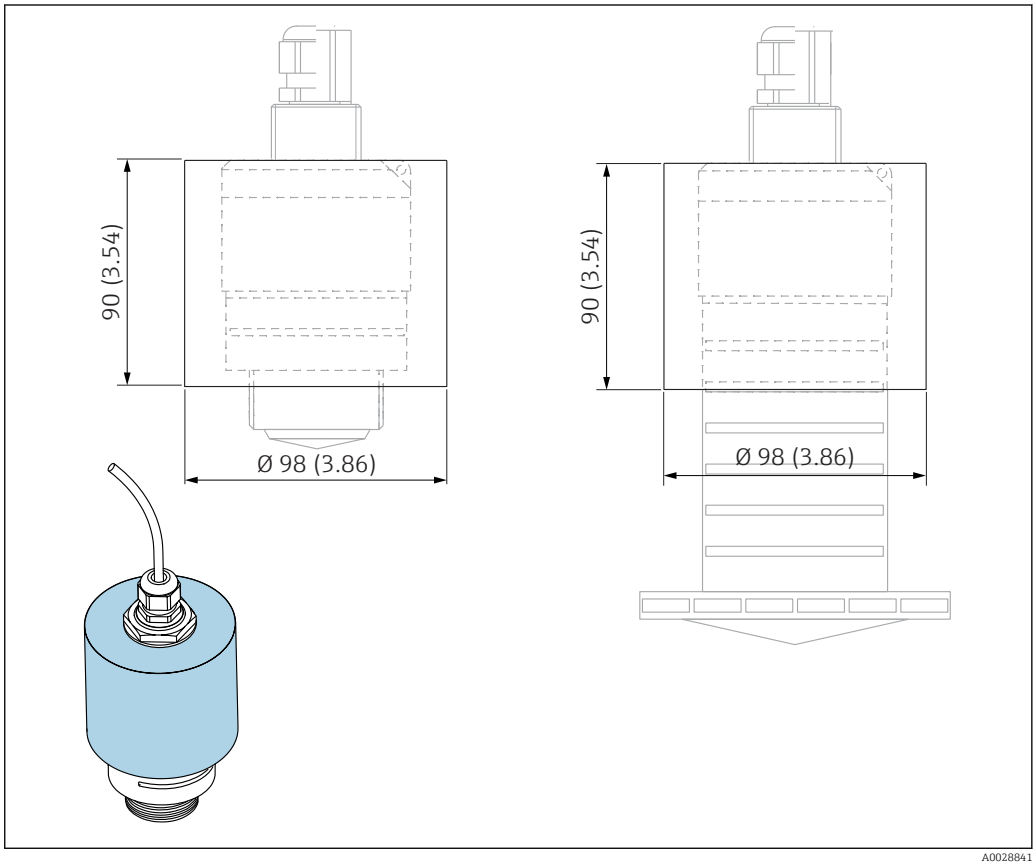

33 *Dimensions of protective cover, engineering unit: mm (in)*

Material
PVDF

Order number
52025686

The sensor is not completely covered in the case of the 40 mm (1.5 in) antenna or the 80 mm (3 in) antenna.

13.1.2 Securing nut G 1-1/2"

Suitable for devices with G 1-1/2" and MNPT 1-1/2" process connection.

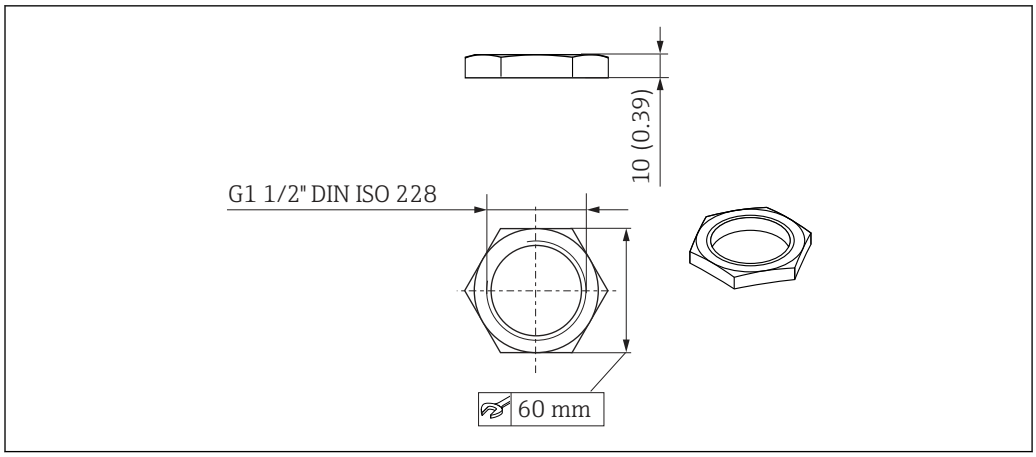

34 *Dimensions of securing nut, engineering unit: mm (in)*

Material
PC

Order number
52014146

13.1.3 Securing nut G 2"

Suitable for devices with G 2" and MNPT 2" process connection on front.

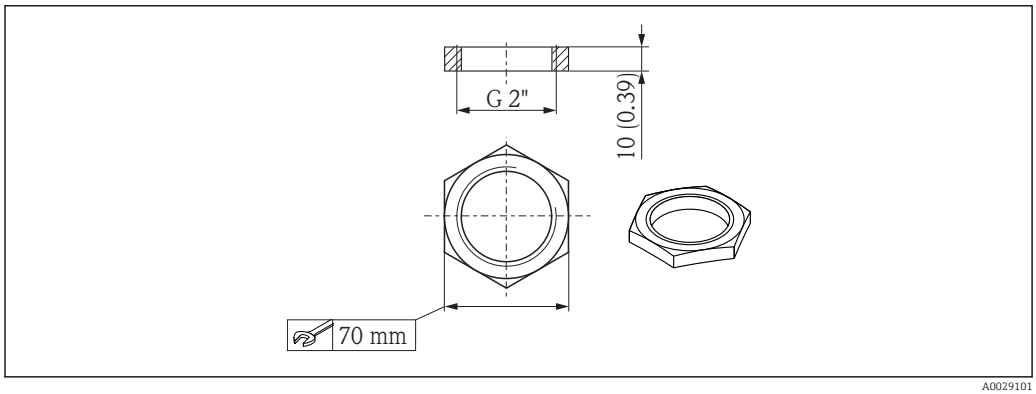

35 *Dimensions of securing nut, engineering unit: mm (in)*

Material
PC

Order number
52000598

13.1.4 Flooding protection tube 40 mm (1.5 in)

Suitable for use with devices with a 40 mm (1.5 in) antenna and G 1-1/2" process connection on front.

The flooding protection tube can be ordered together with the device via the product structure "Accessory enclosed".

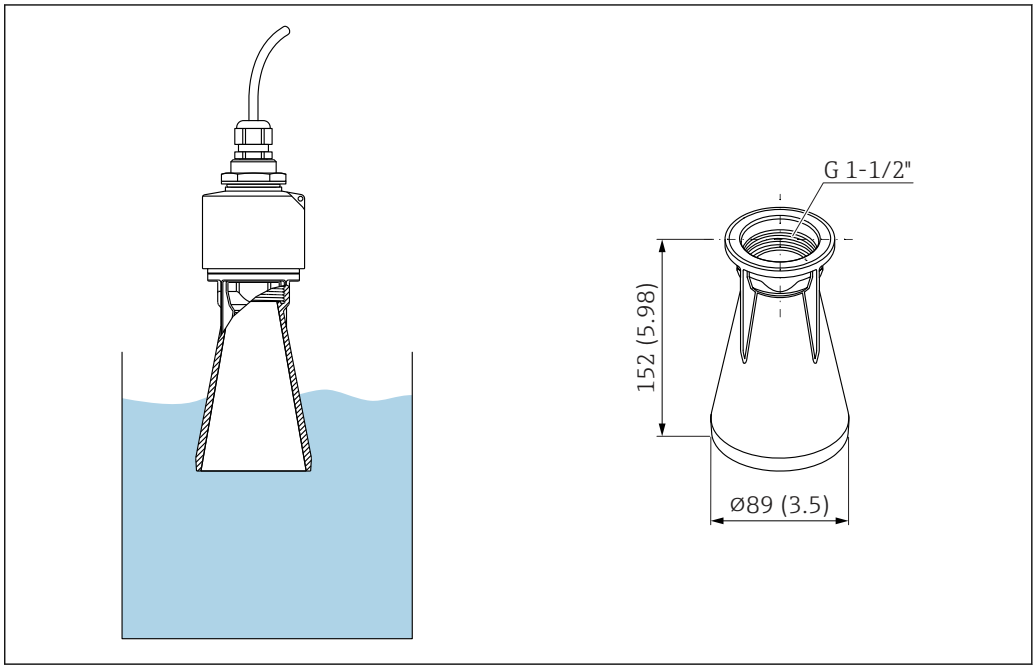

36 Dimensions of 40 mm (1.5 in) flooding protection tube, engineering unit: mm (in)

Material
PBT-PC, metalized

Order number
71325090

13.1.5 Flooding protection tube 80 mm (3 in)

Suitable for use with devices with a 80 mm (3 in) antenna and "Mounting customer side w/o flange" process connection.

The flooding protection tube can be ordered together with the device via the product structure "Accessory enclosed".

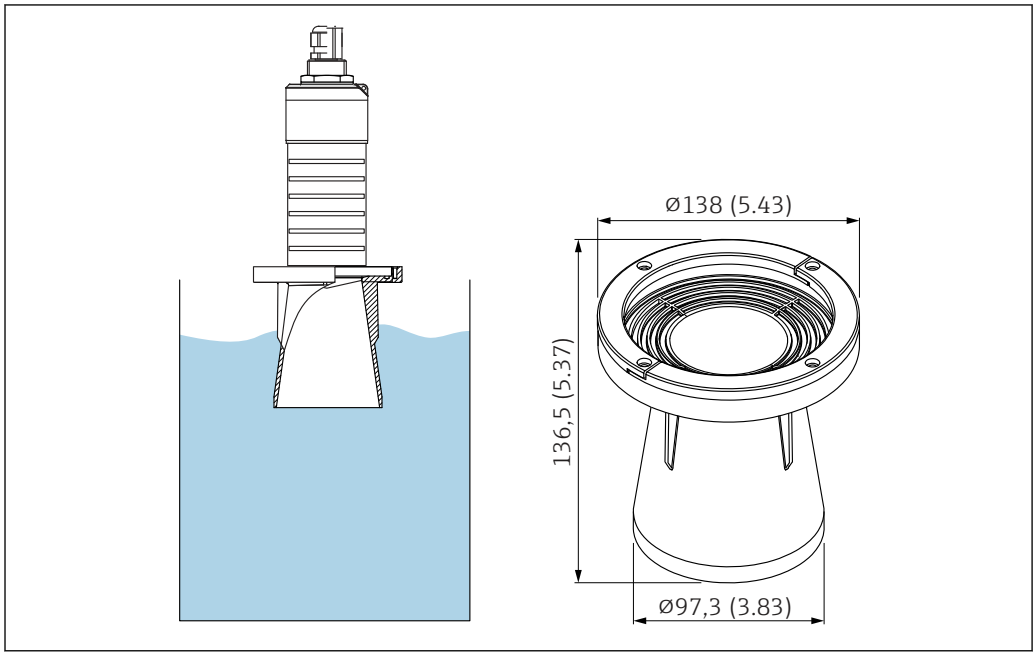

37 *Dimensions of 80 mm (3 in) flooding protection tube, engineering unit: mm (in)*

Material
PBT-PC, metalized

Order number
71327051

13.1.6 Mounting bracket, adjustable

The mounting bracket can be ordered together with the device via the product structure "Accessory enclosed".

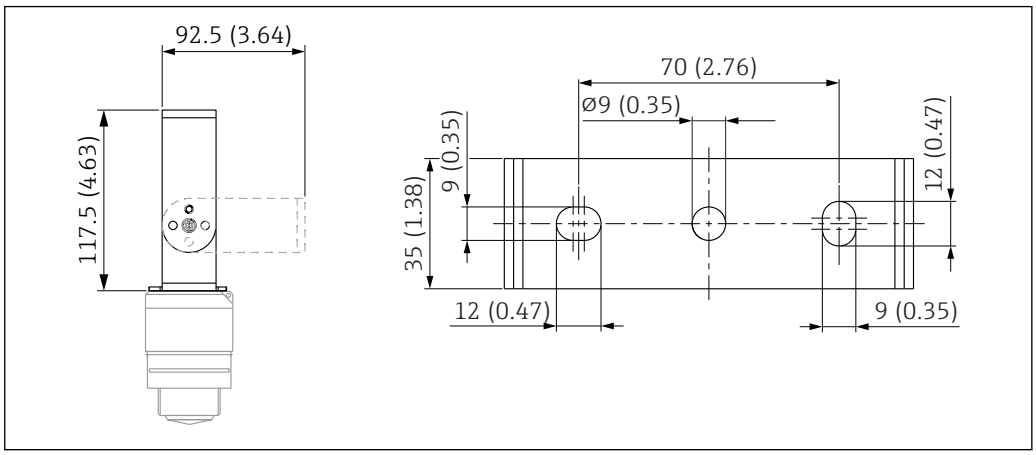

38 Dimensions of mounting bracket, engineering unit: mm (in)

Consists of:
- 1 × mounting bracket, 316L (1.4404)
- 1 × mounting bracket, 316L (1.4404)
- 3 × screws, A4
- 3 × securing disks, A4

Order number
71325079

13.1.7 UNI flange 2"/DN50/50, PP

The UNI flange 2"/DN50/50 can be ordered together with the device via the product structure "Accessory enclosed".

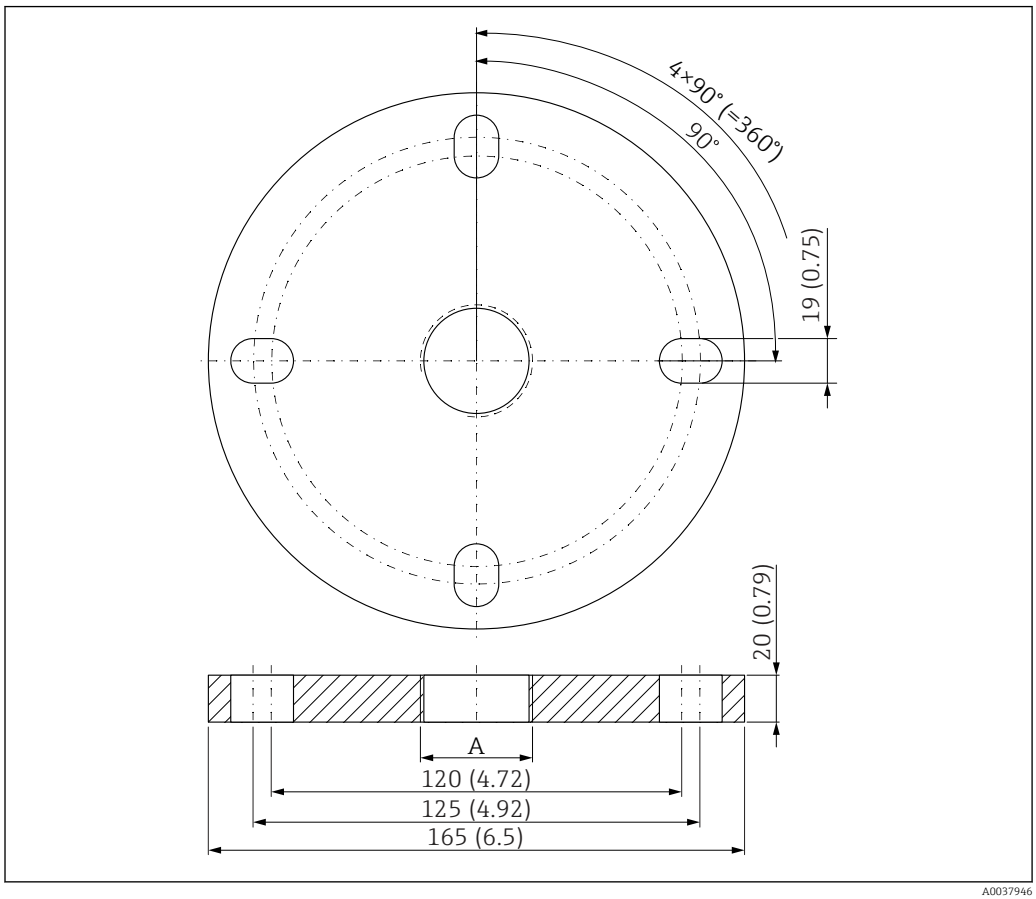

39 Dimensions of UNI flange 2"/DN50/50, engineering unit: mm (in)

A Sensor connection in accordance with product structure "Process connection on front" or "Process connection on rear"

Material
PP

Order number
FAX50-####

13.1.8 UNI flange 3"/DN80/80, PP

The UNI flange 3"/DN80/80 can be ordered together with the device via the product structure "Accessory enclosed".

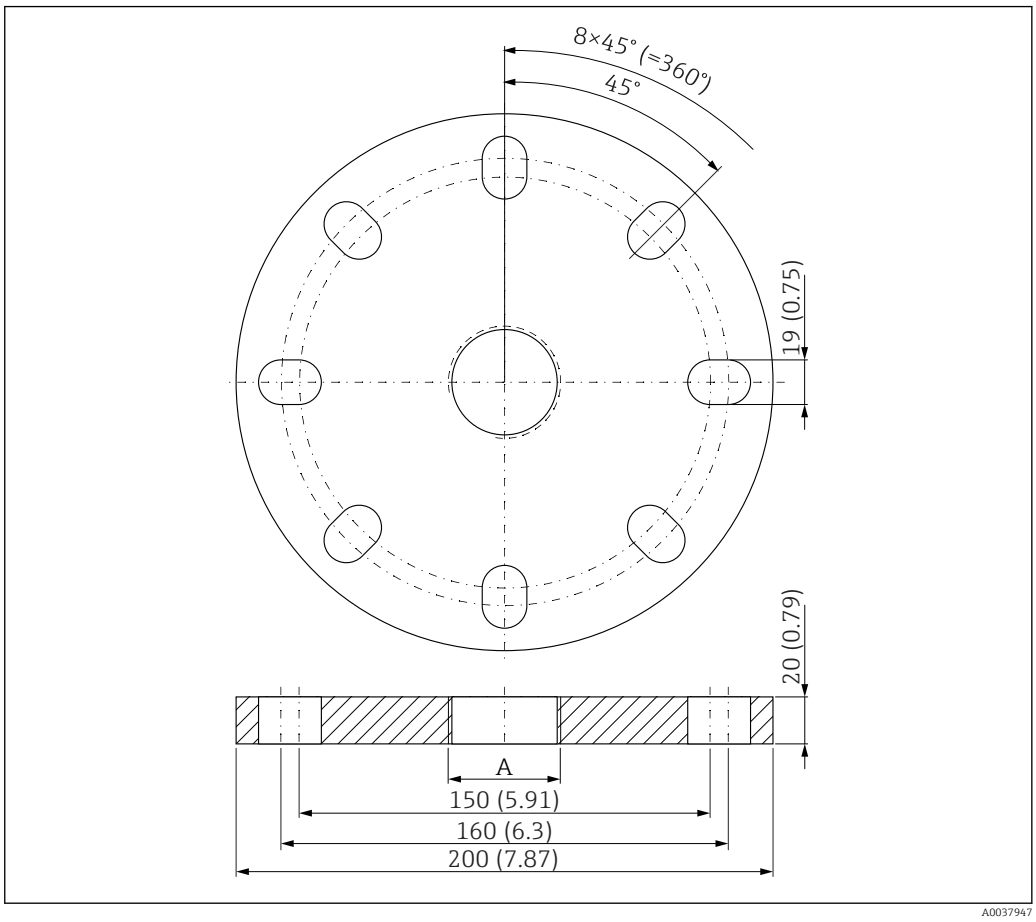

40 Dimensions of UNI flange 3"/DN80/80, engineering unit: mm (in)

A Sensor connection in accordance with product structure "Process connection on front" or "Process connection on rear"

Material
PP

Order number
FAX50-####

13.1.9 UNI flange 4"/DN100/100, PP

The UNI flange 4"/DN100/100 can be ordered together with the device via the product structure "Accessory enclosed".

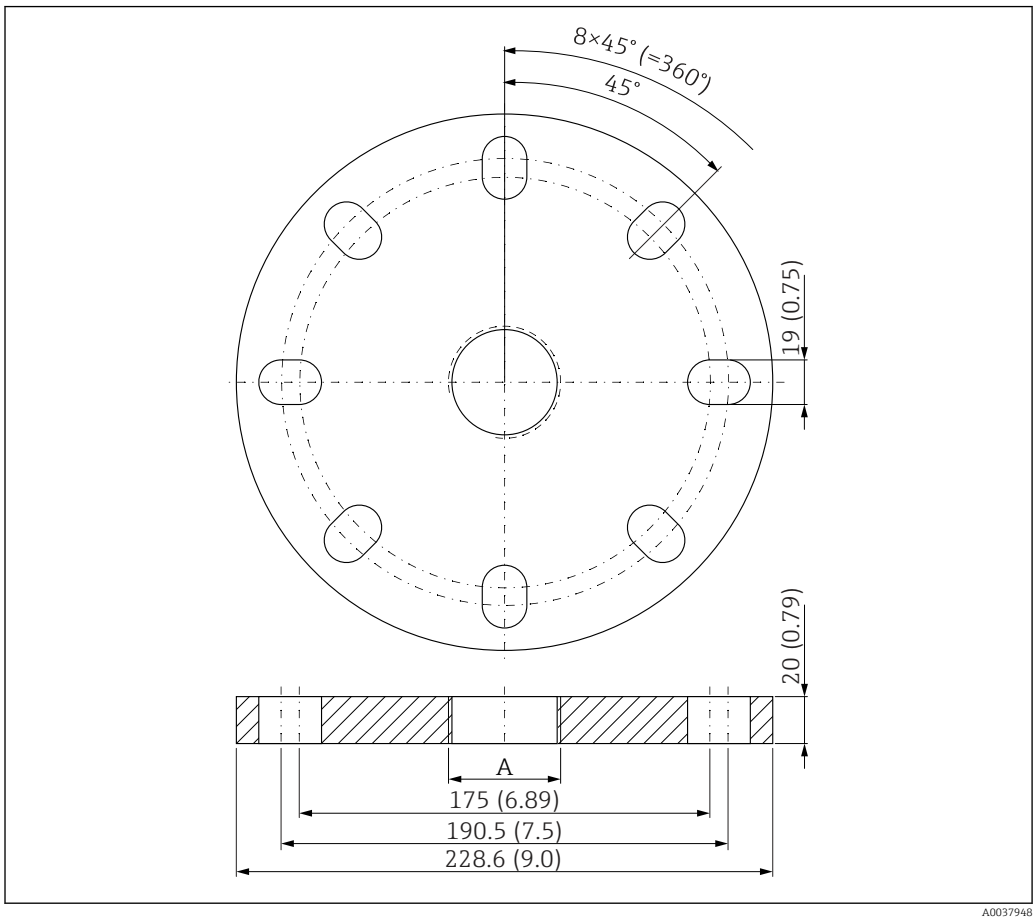

41 Dimensions of UNI flange 4"/DN100/100, engineering unit: mm (in)

A Sensor connection in accordance with product structure "Process connection on front" or "Process connection on rear"

Material
PP

Order number
FAX50-####

13.1.10 Angle bracket for wall mounting

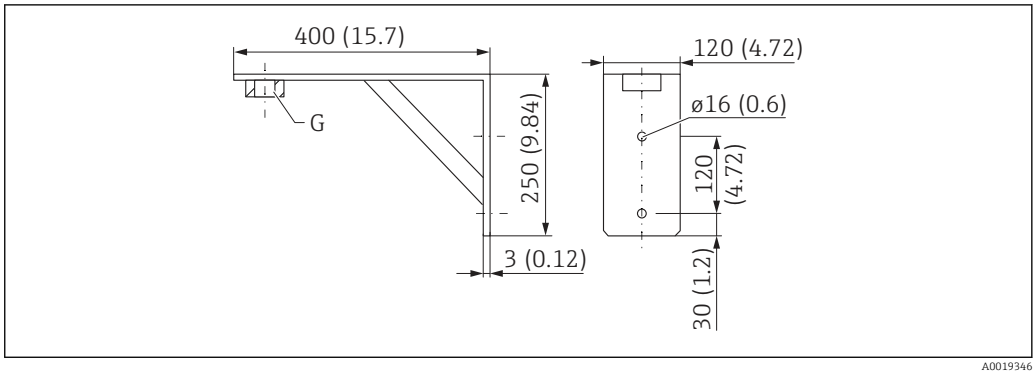

42 *Dimensions of angle bracket. Unit of measurement mm (in)*

G Sensor connection in accordance with product structure "Process connection on front"

Weight
3.4 kg (7.5 lb)

Material
316L (1.4404)

Order number for G 1-1/2" process connection
71452324
Also suitable for MNPT 1-1/2"

Order number for G 2" process connection
71452325
Also suitable for MNPT 2"

13.1.11 Cantilever with pivot

Installation type sensor process connection rear side

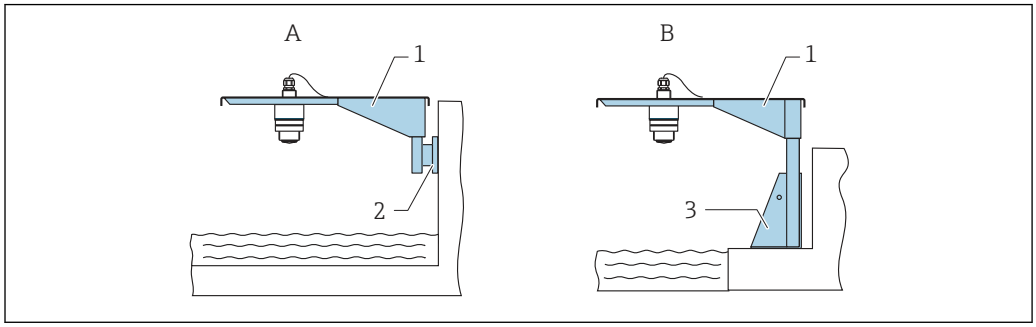

43 *Installation type sensor process connection rear side*

A Installation with cantilever and wall bracket
B Installation with cantilever and mounting frame
1 Cantilever
2 Wall bracket
3 Mounting frame

Cantilever (short) with pivot, sensor process connection on rear

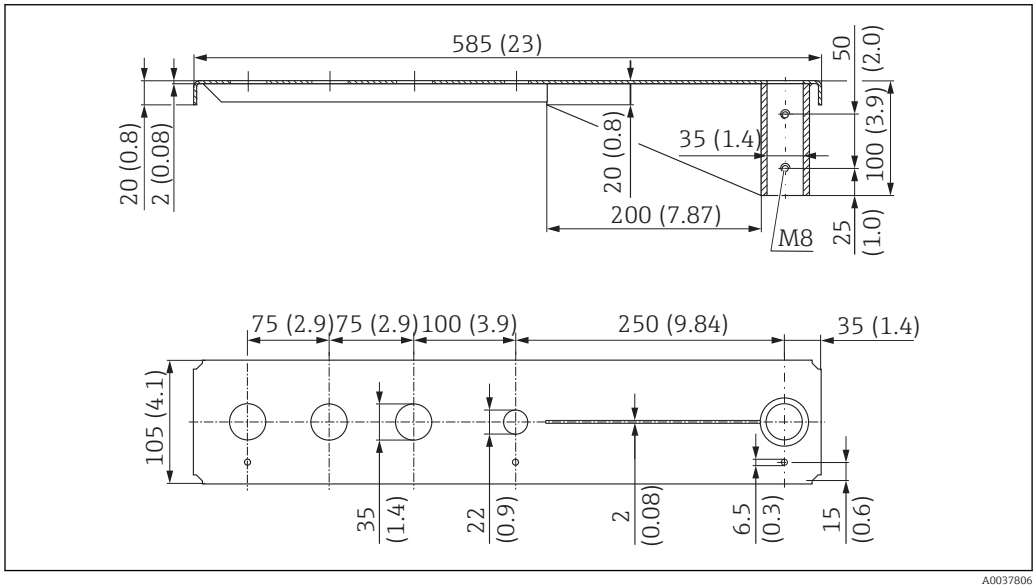

44 *Dimensions of cantilever (short) with pivot for sensor process connection on rear. Unit of measurement mm (in)*

Weight:
2.1 kg (4.63 lb)

Material
316L (1.4404)

Order number
71452315

- 35 mm (1.38 in) openings for all G 1" or MNPT 1" connections on rear
- 22 mm (0.87 in) opening can be used for an additional sensor
- Retaining screws are included in delivery

Cantilever (long) with pivot, sensor process connection on rear

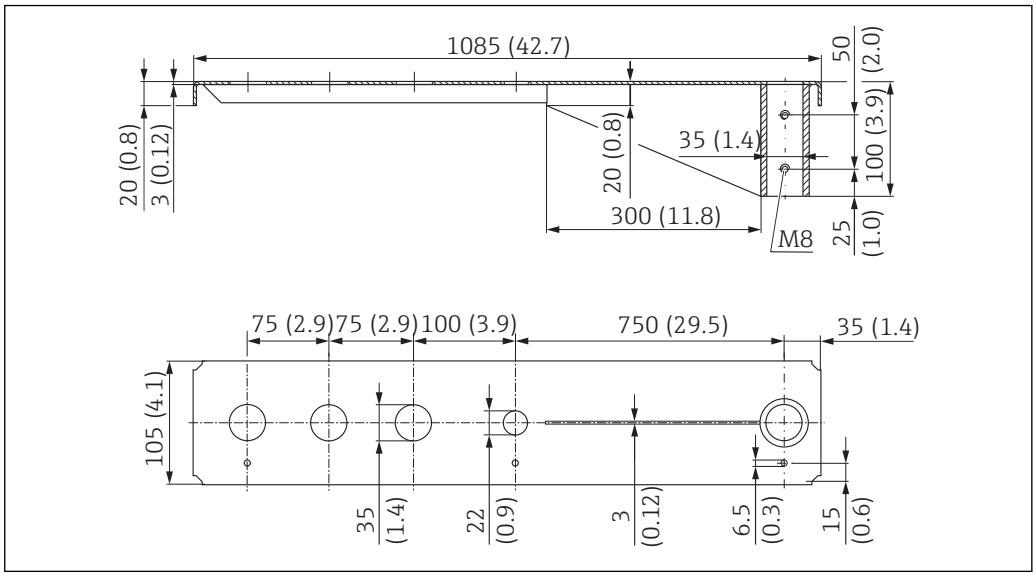

45 *Dimensions of cantilever (long) with pivot for sensor process connection on rear. Unit of measurement mm (in)*

Weight:
4.5 kg (9.92 lb)

Material
316L (1.4404)

Order number
71452316

- 35 mm (1.38 in) openings for all G 1" or MNPT 1" connections on rear
- 22 mm (0.87 in) opening can be used for an additional sensor
- Retaining screws are included in delivery

Installation type sensor process connection front side

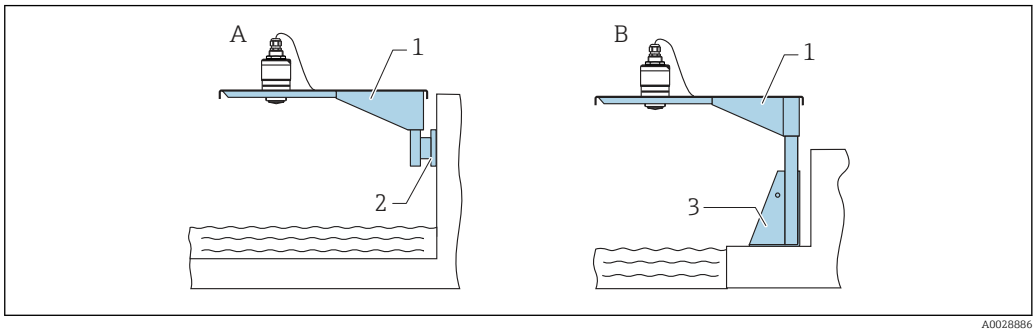

46 *Installation type sensor process connection front side*

A Installation with cantilever and wall bracket
B Installation with cantilever and mounting frame
1 Cantilever
2 Wall bracket
3 Mounting frame

Cantilever (short) with pivot, G 1-½" sensor process connection on front

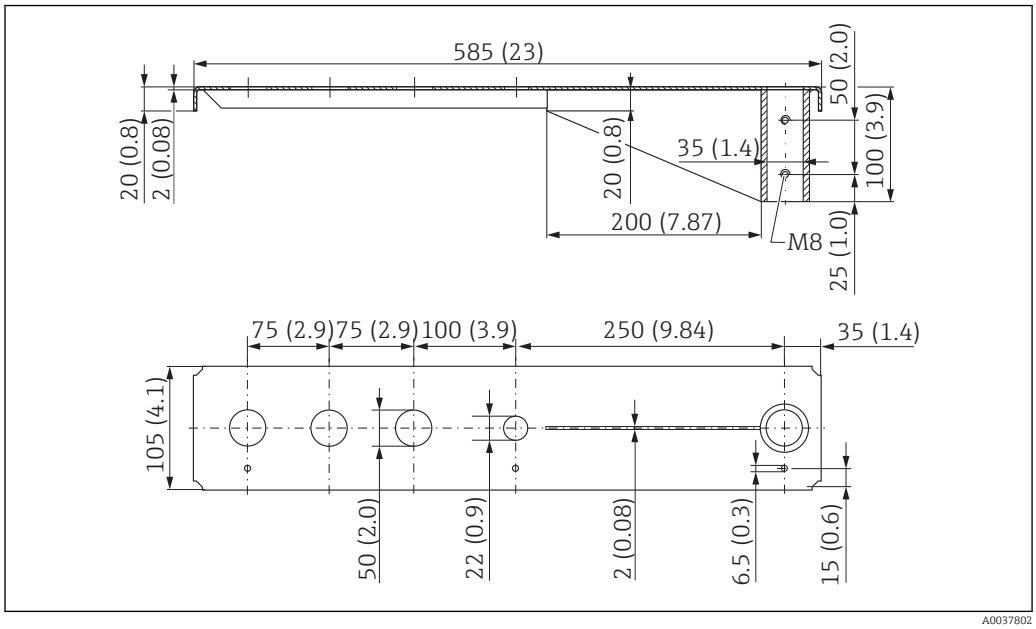

47 *Dimensions of cantilever (short) with pivot for G 1-½" sensor process connection on front. Unit of measurement mm (in)*

Weight:
1.9 kg (4.19 lb)

Material
316L (1.4404)

Order number
71452318

- 50 mm (2.17 in) openings for all G 1-½" (MNPT 1-½") connections on front
- 22 mm (0.87 in) opening can be used for an additional sensor
- Retaining screws are included in delivery

Cantilever (long) with pivot, G 1-½" sensor process connection on front

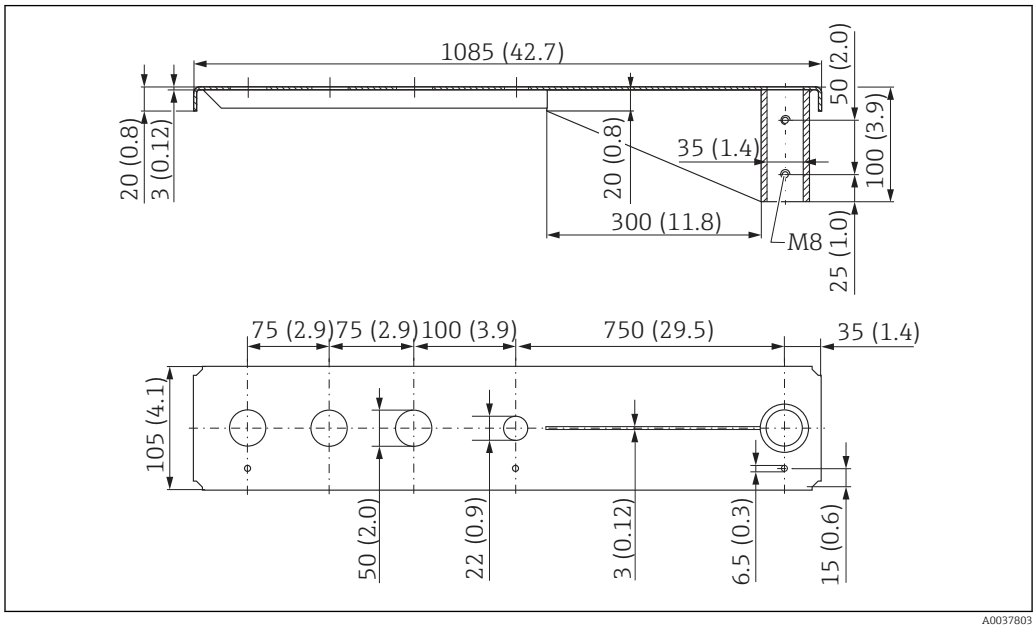

48 *Dimensions of cantilever (long) with pivot for G 1-½" sensor process connection on front. Unit of measurement mm (in)*

Weight:
4.4 kg (9.7 lb)

Material
316L (1.4404)

Order number
571452319

- 50 mm (2.17 in) openings for all G 1-½" (MNPT 1-½") connections on front
- 22 mm (0.87 in) opening can be used for an additional sensor
- Retaining screws are included in delivery

Cantilever (short) with pivot, G 2" sensor process connection on front

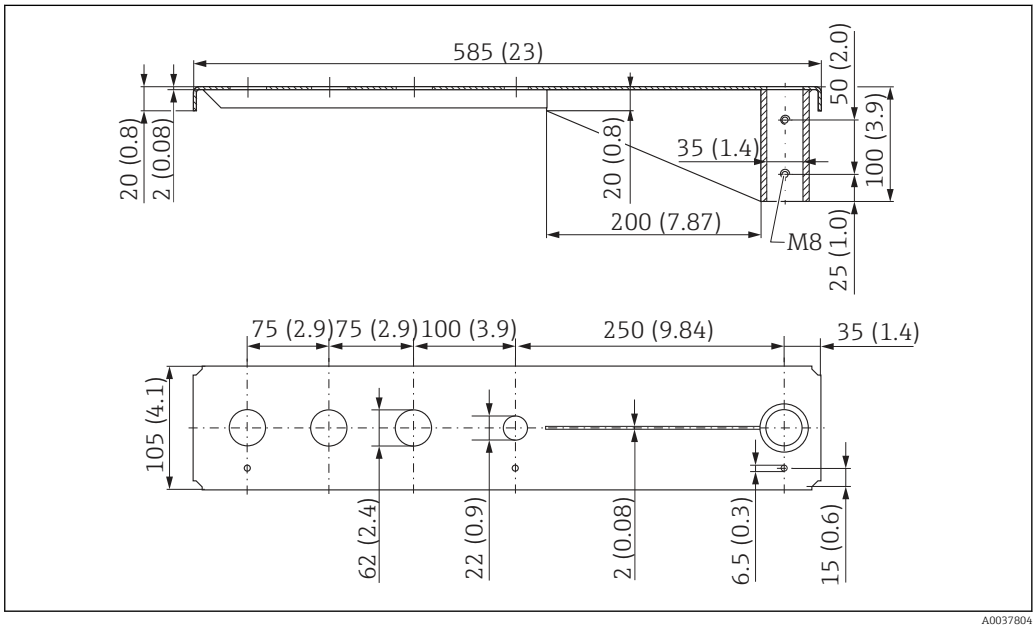

49 *Dimensions of cantilever (short) with pivot for G 2" sensor process connection on front. Unit of measurement mm (in)*

Weight:
1.9 kg (4.19 lb)

Material
316L (1.4404)

Order number
71452321

- 62 mm (2.44 in) openings for all G 2" (MNPT 2") connections on front
- 22 mm (0.87 in) opening can be used for an additional sensor
- Retaining screws are included in delivery

Cantilever (long) with pivot, G 2" sensor process connection on front

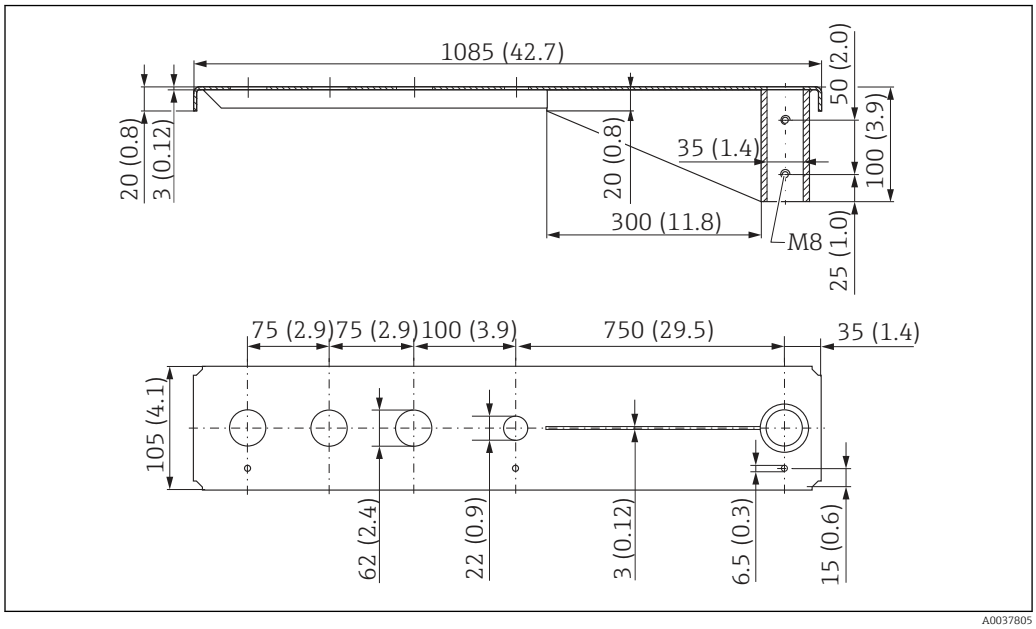

50 *Dimensions of cantilever (long) with pivot for G 2" sensor process connection on front. Unit of measurement mm (in)*

Weight:
4.4 kg (9.7 lb)

Material
316L (1.4404)

Order number
71452322

- 62 mm (2.44 in) openings for all G 2" (MNPT 2") connections on front
- 22 mm (0.87 in) opening can be used for an additional sensor
- Retaining screws are included in delivery

Mounting frame (short) for cantilever with pivot

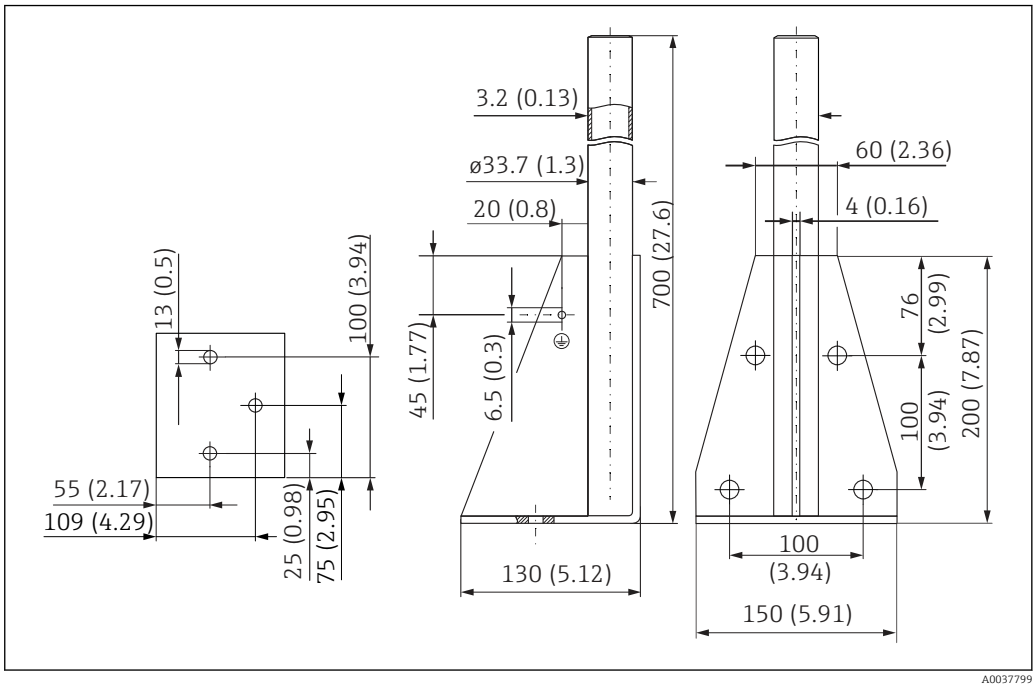

51 *Dimensions of mounting frame (short). Unit of measurement mm (in)*

Weight:
3.2 kg (7.06 lb)

Material
316L (1.4404)

Order number
71452327

Mounting frame (long) for cantilever with pivot

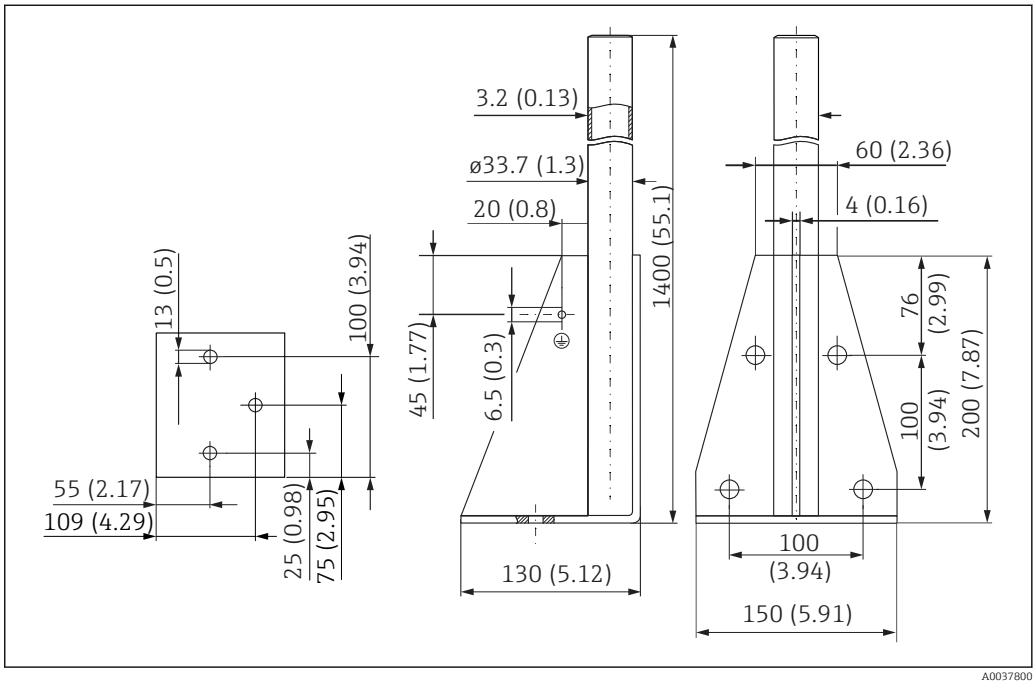

52 *Dimensions of mounting frame (long). Unit of measurement mm (in)*

Weight:
4.9 kg (10.08 lb)

Material
316L (1.4404)

Order number
71452326

Wall bracket for cantilever with pivot

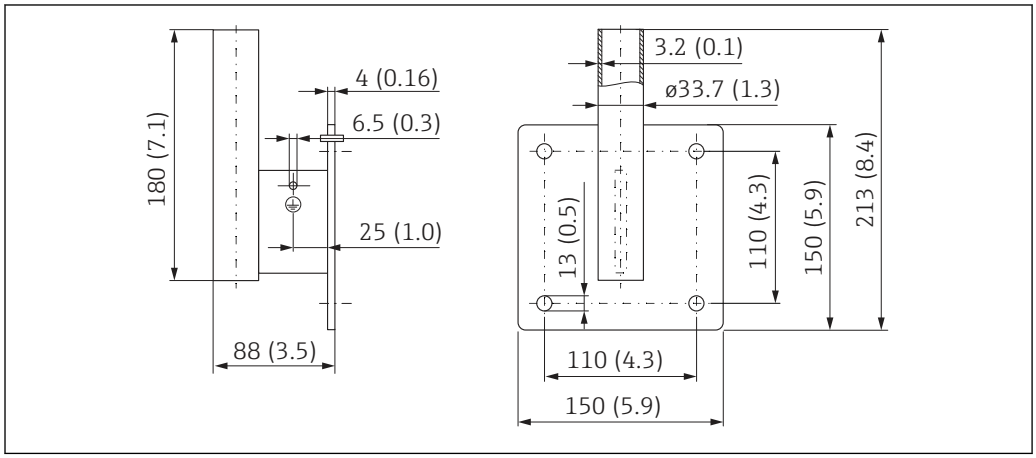

53 Dimensions of the wall bracket. Unit of measurement mm (in)

Weight
1.4 kg (3.09 lb)

Material
316L (1.4404)

Order number
71452323

13.1.12 Ceiling mounting bracket

The ceiling mounting bracket can be ordered together with the device via the "Accessory enclosed" section of the product order structure.

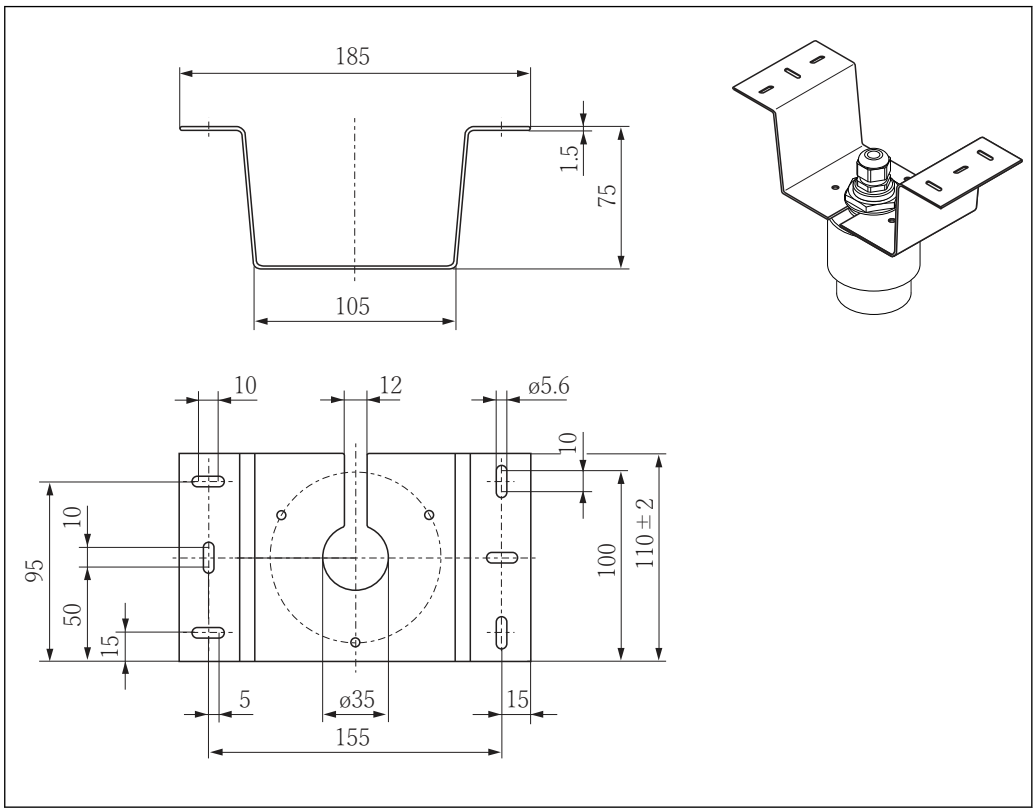

54 *Dimensions of ceiling mounting bracket. Unit of measurement mm (in)*

Material
316L (1.4404)

Order number
71093130

13.1.13 Pivoted mounting bracket for sewer channel

The pivotable mounting bracket is used to install the device in a manhole over a sewer channel.

The mounting bracket can be ordered together with the device via the "Accessory enclosed" section of the product order structure.

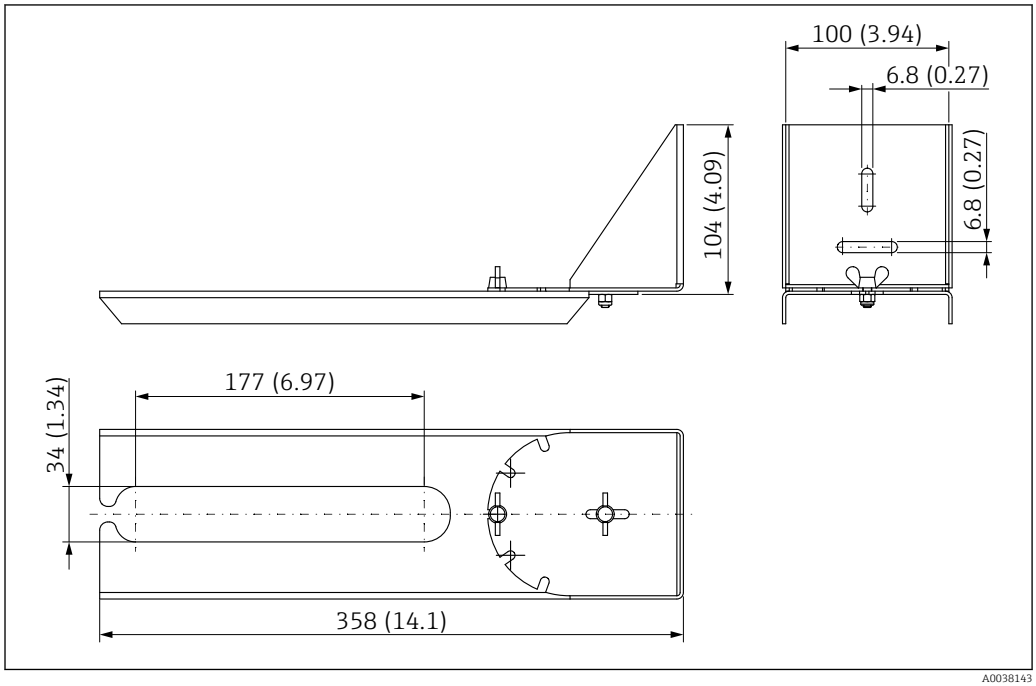

55 *Dimensions of pivotable mounting bracket. Unit of measurement mm (in)*

Material
316L (1.4404)

Order number
71429910

13.1.14 Horizontal mounting bracket for sewer shafts

#

The horizontal mounting bracket for sewer shafts is used to install the device in confined spaces.

The mounting bracket can be ordered together with the device via the "Accessory enclosed" section of the product order structure.

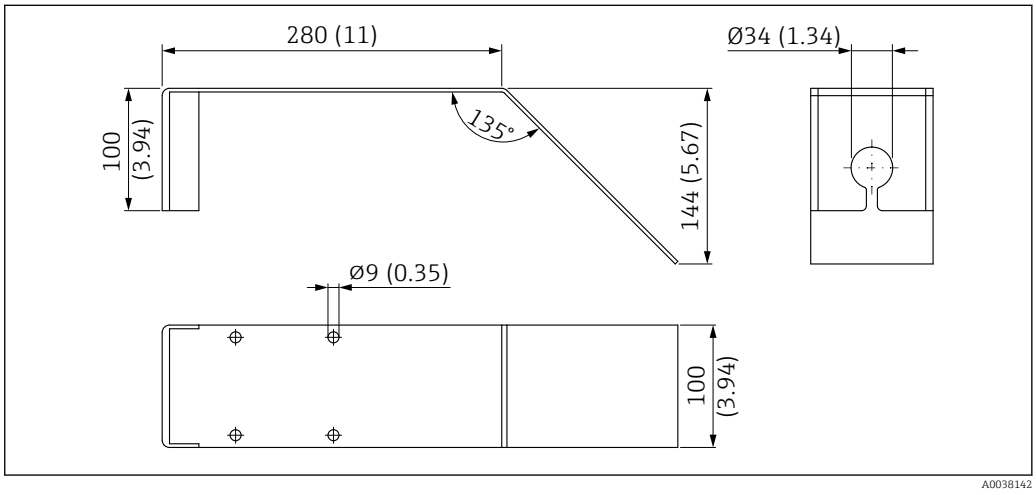

56 *Dimensions of horizontal mounting bracket for sewer shafts. Unit of measurement mm (in)*

Material
316L (1.4404)

Order number
71429905

13.1.15 RIA15 in the field housing

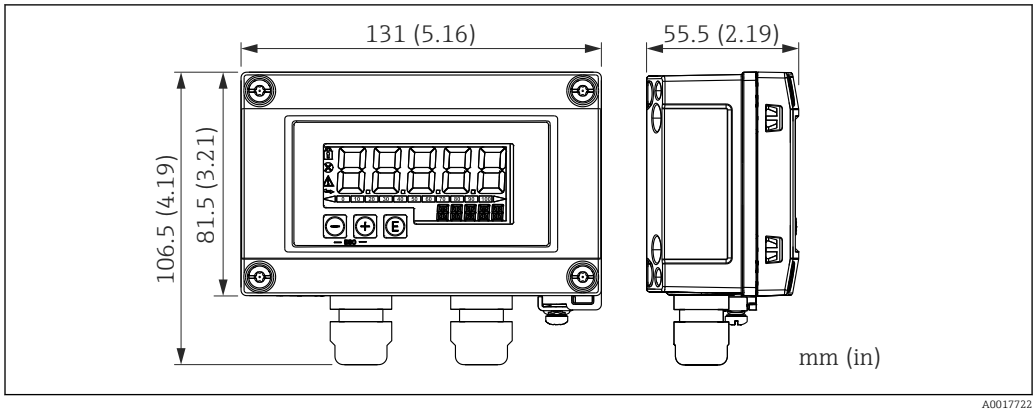

57 *Dimensions of RIA15 in field housing, engineering unit: mm (in)*

The RIA15 remote indicator can be ordered together with the device. Product structure, feature 620 "Accessories enclosed":

- Option R4 "Remote indicator RIA15 non-hazardous area, field housing"
- Option R5 "Remote indicator RIA15 Ex= explosion protection approval, field housing"

Field housing material: Plastic (PBT with steel fibers, antistatic)

Other housing versions are available via the RIA15 product structure.

Alternatively available as an accessory, for details see Technical Information TI01043K and Operating Instructions BA01170K

13.1.16 HART communication resistor

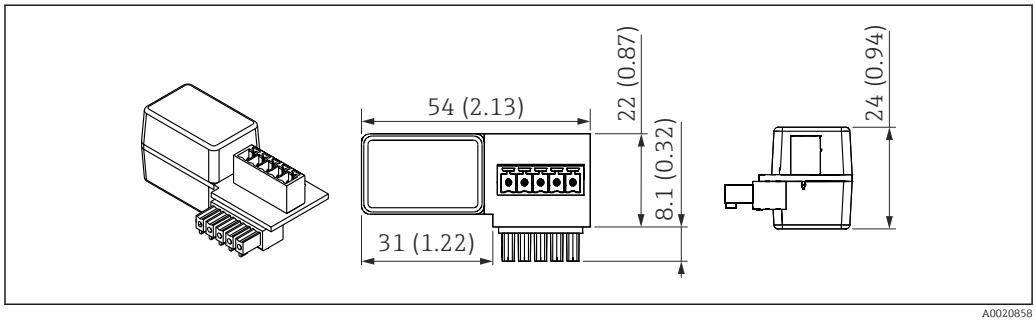

58 *Dimensions of HART communication resistor, engineering unit: mm (in)*

A communication resistor is required for HART communication. If this is not already present (e.g. in the power supply RMA, RN221N, RNS221, ...), it can be ordered with the device via the product structure, feature 620 "Accessories enclosed": option R6 "HART communication resistor hazardous / non-hazardous area".

Alternatively, it is available as an accessory; order number "RK01-BC"

Alternatively available as an accessory, for details see Technical Information TI01043K and Operating Instructions BA01170K

The HART communication resistor is specially designed for use with the RIA15 and can be attached easily.

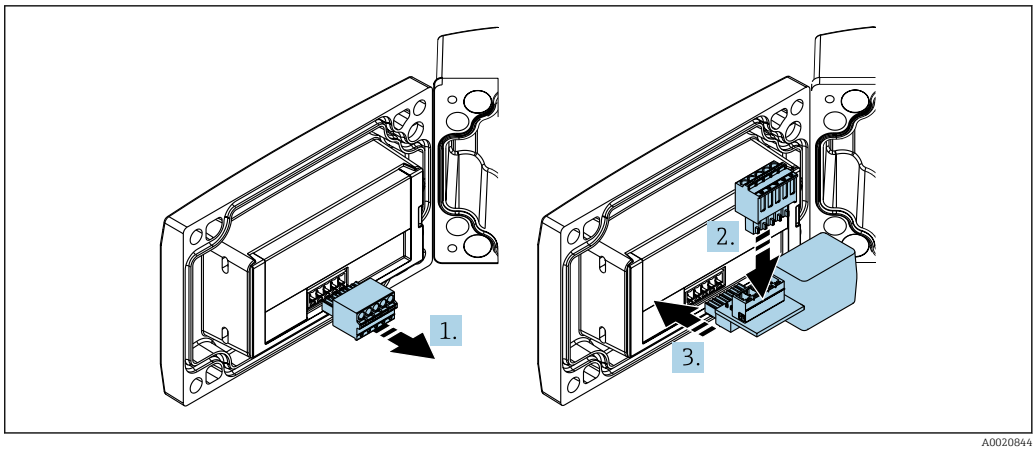

A0020844

1. Disconnect plug-in terminal block.
2. Insert the terminal block into the slot provided on the HART communication resistor module.
3. Insert the HART communication resistor in the slot in the housing.

13.2 Communication-specific accessories

Commubox FXA195 HART
For intrinsically safe HART communication with FieldCare / DeviceCare via the USB interface.

For details, see Technical Information TI00404F

HART Loop Converter HMX50
Is used to evaluate and convert dynamic HART process variables to analog current signals or limit values.
Order number: 71063562

For details, see Technical Information TI00429F and Operating Instructions BA00371F

WirelessHART adapter SWA70
Is used for the wireless connection of field devices.
The WirelessHART adapter can be easily integrated into field devices and existing infrastructures, offers data protection and transmission safety and can be operated in parallel with other wireless networks.

For details, see Operating Instructions BA00061S

13.3 Service-specific accessories

Applicator
Software for selecting and sizing Endress+Hauser measuring devices:
- Calculation of all the necessary data for identifying the optimum measuring device: e.g. pressure loss, accuracy or process connections.
- Graphic illustration of the calculation results

Administration, documentation and access to all project-related data and parameters over the entire life cycle of a project.

Applicator is available:
https://portal.endress.com/webapp/applicator

Configurator
Product Configurator - the tool for individual product configuration
- Up-to-the-minute configuration data
- Depending on the device: Direct input of measuring point-specific information such as measuring range or operating language
- Automatic verification of exclusion criteria
- Automatic creation of the order code and its breakdown in PDF or Excel output format
- Ability to order directly in the Endress+Hauser Online Shop

The Configurator is available on the Endress+Hauser website: www.endress.com -> Click "Corporate" -> Select your country -> Click "Products" -> Select the product using the filters and the search field -> Open the product page -> The "Configure" button to the right of the product image opens the Product Configurator.

DeviceCare SFE100
Configuration tool for HART, PROFIBUS and FOUNDATION Fieldbus field devices
DeviceCare is available for download at www.software-products.endress.com. You need to register in the Endress+Hauser software portal to download the application.

Technical Information TI01134S

FieldCare SFE500
FDT-based plant asset management tool
It can configure all smart field units in your system and helps you manage them. By using the status information, it is also a simple but effective way of checking their status and condition.

Technical Information TI00028S

W@M
Life cycle management for your plant
W@M supports you with a wide range of software applications over the entire process: from planning and procurement, to the installation, commissioning and operation of the measuring devices. All the relevant device information, such as the device status, spare parts and device-specific documentation, is available for every device over the entire life cycle.
The application already contains the data of your Endress+Hauser device. Endress+Hauser also takes care of maintaining and updating the data records.

W@M is available:
www.endress.com/lifecyclemanagement

13.4 System components

Memograph M graphic data manager
The Memograph M graphic data manager provides information on all the relevant process variables. Measured values are recorded correctly, limit values are monitored and measuring points analyzed. The data are stored in the 256 MB internal memory and also on an SD card or USB stick.

For details, see Technical Information TI01180R and Operating Instructions BA01338R

RNS221
Supply unit for powering two 2-wire measuring devices. Bidirectional communication is possible via the HART communication jacks.

For details, see Technical Information TI00081R and Brief Operating Instructions KA00110R

RN221N
Active barrier with power supply for safe separation of 4 to 20 mA standard signal circuits. Bidirectional HART communication is possible via integrated communication jacks (R=250 Ω).

For details, see Technical Information TI073R and Operating Instructions BA202R

RMA42
Digital process transmitter for monitoring and displaying analog measured values

For details, see Technical Information TI00150R and Operating Instructions BA00287R

RIA452
RIA452 digital process indicator, panel mounted housing for monitoring and displaying analog measured values with batch and pump control functions and flow calculation

For details, see Technical Information TI113R and Operating Instructions BA00254R

HAW562
Overvoltage protection device for DIN rail as per IEC 60715, suitable for protecting electronics against destruction as a result of overvoltage.

For details, see Technical Information TI01012K

14 Operating menu

14.1 Overview of the operating menu (SmartBlue)

Navigation Operating menu

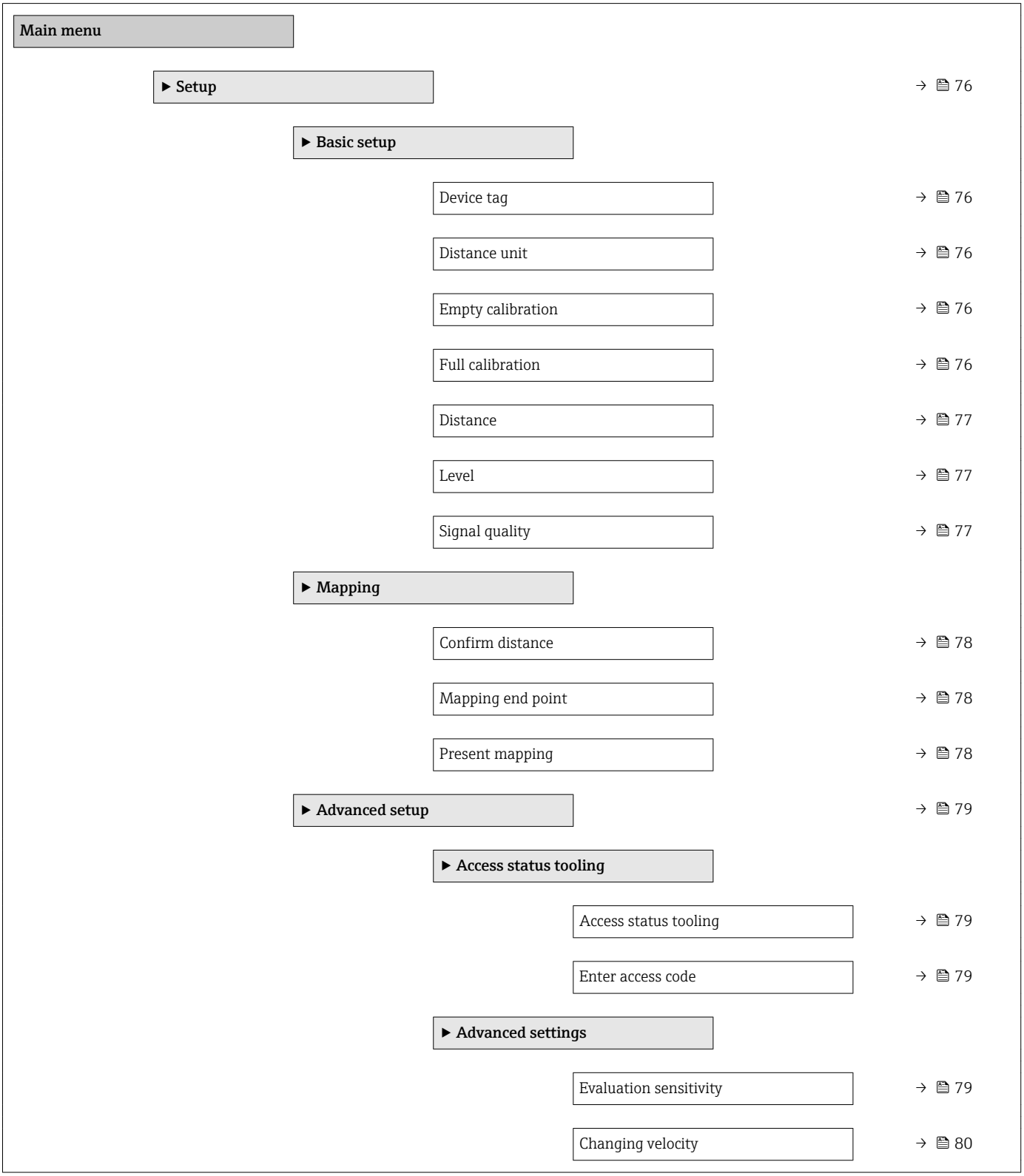

- First Echo sensitivity → 80
- Output mode → 80
- Blocking distance → 81
- Level correction → 81
- Evaluation distance → 81
- Linearization type → 82
- Level linearized → 82

▶ Safety settings → 83

- Delay time echo lost → 83
- Diagnostics echo lost → 83

▶ Current output → 84

- Output current → 84
- Damping output → 84
- Turn down → 84
- 4 mA value → 85
- 20 mA value → 85
- Trim → 85
- Trim value high → 86
- Trim value low → 86

▶ Administration → 87

- **▶ Administration 1**
- Define access code → 87
- Confirm access code → 87

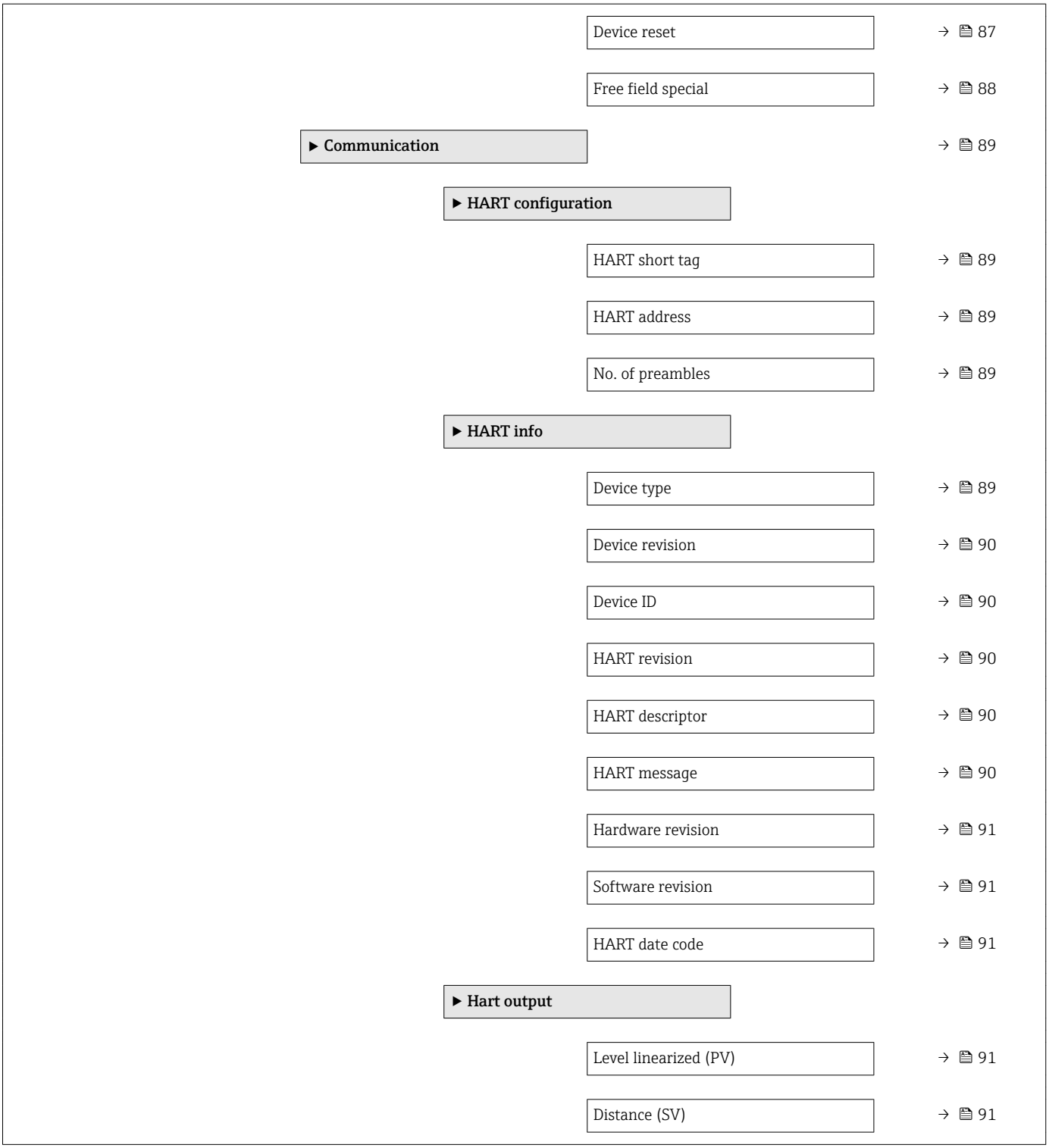
Device reset
→ 87
Free field special
→ 88
▶ Communication
→ 89
▶ HART configuration
HART short tag
→ 89
HART address
→ 89
No. of preambles
→ 89
▶ HART info
Device type
→ 89
Device revision
→ 90
Device ID
→ 90
HART revision
→ 90
HART descriptor
→ 90
HART message
→ 90
Hardware revision
→ 91
Software revision
→ 91
HART date code
→ 91
▶ Hart output
Level linearized (PV)
→ 91
Distance (SV)
→ 91

- Relative echo amplitude (TV) → 92
- Temperature (QV) → 92
- ▶ **Bluetooth configuration** → 92
  - Bluetooth mode → 92
- ▶ **Diagnostics** → 93
  - ▶ **Diagnostics** → 93
    - Actual diagnostics → 93
    - Previous diagnostics → 93
    - Delete previous diagnostic → 93
    - Signal quality → 77
  - ▶ **Device information** → 95
    - Device name → 95
    - Firmware version → 95
    - Extended order code 1 → 95
    - Extended order code 2 → 95
    - Extended order code 3 → 95
    - Order code → 96
    - Serial number → 96
    - ENP version → 96
  - ▶ **Simulation** → 97
    - Simulation → 97
    - Value current output 1 → 97
    - Process variable value → 97

14.2 Overview of operating menu (FieldCare / DeviceCare)

Navigation Operating menu

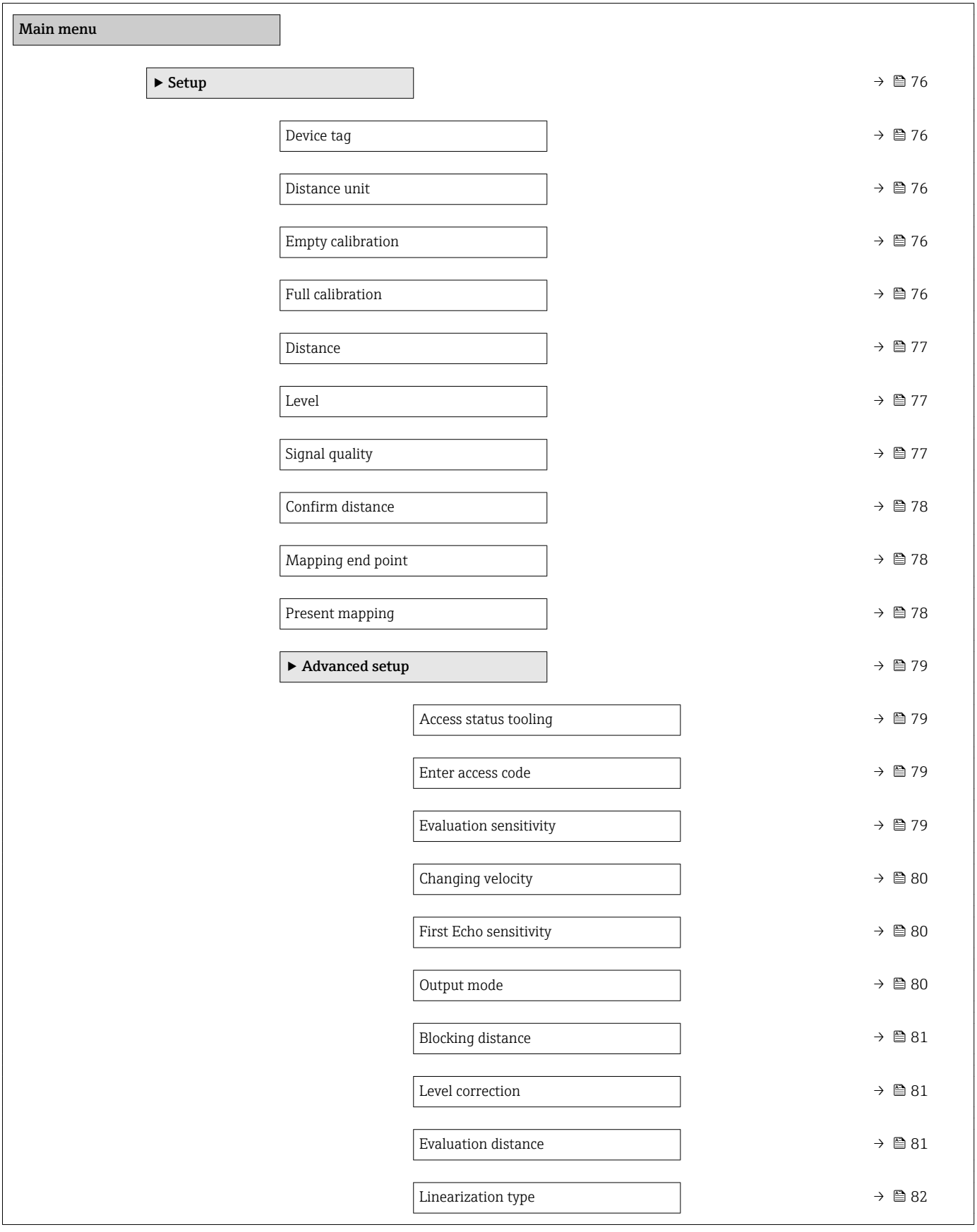

- Level linearized → 82
- ▶ **Safety settings** → 83
  - Delay time echo lost → 83
  - Diagnostics echo lost → 83
- ▶ **Current output** → 84
  - Output current → 84
  - Damping output → 84
  - Turn down → 84
  - 4 mA value → 85
  - 20 mA value → 85
  - Trim → 85
  - Trim value high → 86
  - Trim value low → 86
- ▶ **Administration** → 87
  - Define access code → 87
  - Confirm access code → 87
  - Device reset → 87
  - Free field special → 88

▶ **Communication** → 89

- HART short tag → 89
- HART address → 89
- No. of preambles → 89
- Device type → 89
- Device revision → 90
- Device ID → 90

- HART revision → 90
- HART descriptor → 90
- HART message → 90
- Hardware revision → 91
- Software revision → 91
- HART date code → 91
- Level linearized (PV) → 91
- Distance (SV) → 91
- Relative echo amplitude (TV) → 92
- Temperature (QV) → 92
- **► Bluetooth configuration** → 92
  - Bluetooth mode → 92

► Diagnostics → 93

- Actual diagnostics → 93
- Previous diagnostics → 93
- Delete previous diagnostic → 93
- Signal quality → 77
- **► Device information** → 95
  - Device name → 95
  - Firmware version → 95
  - Extended order code 1 → 95
  - Extended order code 2 → 95
  - Extended order code 3 → 95
  - Order code → 96

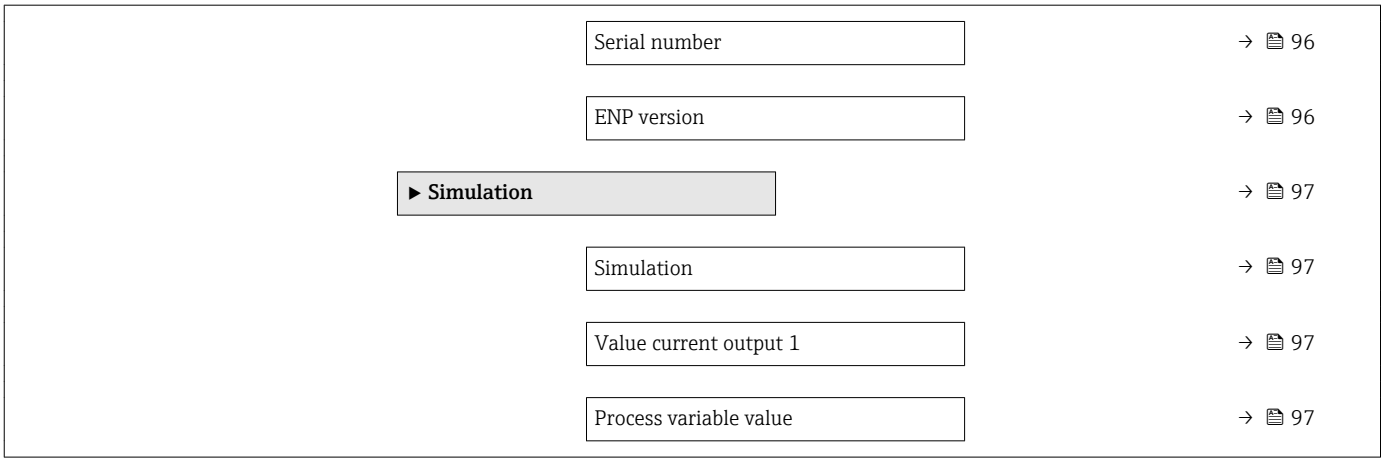
Serial number
→ 96
ENP version
→ 96
▶ Simulation
→ 97
Simulation
→ 97
Value current output 1
→ 97
Process variable value
→ 97

14.3 "Setup" menu

- : Indicates navigation to the parameter via operating tools
- : Indicates parameters that can be locked via the access code.

Navigation Setup

Device tag

Navigation Setup → Device tag

Description Enter a unique name for the measuring point to identify the device quickly within the plant.

Factory setting EH_FMR20_####### (last 7 digits of the device serial number)

Distance unit

Navigation Setup → Distance unit

Description Used for the basic calibration (Empty / Full).

Selection

SI units	*US units*
m	ft

Factory setting m

Empty calibration

Navigation Setup → Empty calibration

Description Distance between process connection and minimum level (0%).

User entry 0.0 to 20 m

Factory setting Depends on the antenna version

Full calibration

Navigation Setup → Full calibration

Description Distance between minimum level (0%) and maximum level (100%).

User entry 0.0 to 20 m

Factory setting Depends on the antenna version

Distance

Navigation Setup → Distance

Description Shows the distance D that is currently measured from the reference point (lower edge of flange / last thread of sensor) to the level.

User interface 0.0 to 20 m

Level

Navigation Setup → Level

Description Displays the measured level L (before linearization). The unit is defined in the 'Distance unit' parameter (factory setting = m).

User interface −99 999.9 to 200 000.0 m

Factory setting 0.0 m

Signal quality

Navigation Setup → Signal quality

Description Displays the signal quality of the level echo. Meaning of the display options - Strong: The evaluated echo exceeds the threshold by at least 10 dB. - Medium: The evaluated echo exceeds the threshold by at least 5 dB. - Weak: The evaluated echo exceeds the threshold by less than 5 dB. - No signal: The device does not find an usable echo. The signal quality indicated in this parameter always refers to the currently evaluated echo, either the level echo or the tank bottom echo. In case of a lost echo ('Signal quality' = No signal) the device generates the following error message: 'Diagnostic echo lost' = Warning (factory setting) or Alarm, if the other option has been selected in 'Diagnostic echo lost'.

User interface
- Strong
- Medium
- Weak
- No signal

Confirm distance

Navigation Setup → Confirm distance

Description Does the measured distance match the real distance? Select one of the options: - Manual map To be selected if the range of mapping is to be defined manually in the 'Mapping end point' parameter. A comparison between actual and indicated distance is not required in this case. - Distance ok To be selected if the measured distance matches the actual distance. The device performs a mapping. - Distance unknown To be selected if the actual distance is unknown. A mapping can not be performed in this case. - Factory map To be selected if the present mapping curve (if one exists) is to be deleted. The device returns to the 'Confirm distance' parameter and a new mapping can be recorded.

Selection
- Manual map
- Distance ok
- Distance unknown
- Factory map

Factory setting Distance unknown

Mapping end point

Navigation Setup → Mapping end point

Description This parameter defines up to which distance the new mapping is to be recorded. The distance is measured from the reference point, i.e. from the lower edge of the mounting flange or sensor.

User entry 0 to 21.8 m

Factory setting 0 m

Present mapping

Navigation Setup → Present mapping

Description Indicates up to which distance a mapping has already been recorded.

User interface 0 to 100 m

14.3.1 "Advanced setup" submenu

Navigation Setup → Advanced setup

Access status tooling

Navigation Setup → Advanced setup → Access status tooling

Description Shows the access authorization to the parameters via the operating tool.

Enter access code

Navigation Setup → Advanced setup → Enter access code

Description The customer-specific access code, which has been defined in the **Define access code** parameter, must be entered to change from the Operator to the Maintenance mode. The device remains in the Operator mode if an incorrect access code is entered. If you lose the access code, please contact your Endress+Hauser sales center.

User entry 0 to 9 999

Factory setting 0

Evaluation sensitivity

Navigation Setup → Advanced setup → Evaluation sensitivity

Description Selection of the evaluation sensitivity Options to select from: - Low The weighting curve is high for low evaluation sensitivity. Interferers but also small level signals are not recognized. - Medium The weighting curve is in a medium region. - High The weighting curve is low for high evaluation sensitivity. Interferers but also small level signals can be reliably detected.

Selection
- Low
- Medium
- High

Factory setting Medium

Changing velocity

Navigation Setup → Advanced setup → Changing velocity

Description Selection of the expected draining or filling speed of the measured level.

Selection
- Slow <10 cm (0,4 in)/min
- Standard <1 m (40 in)/min
- Fast >1 m (40 in)/min
- No filter / test

Factory setting Standard <1 m (40 in)/min

First Echo sensitivity

Navigation Setup → Advanced setup → First Echo sensitivity

Description This parameter describes the band for First Echo evaluation. Is measured / calculated down from the peak of the current level echo. Options to select from: - Low The band for the first echo evaluation is very narrow. The evaluation stays longer at the found echo respectively does not jump to the next Echo or distortion signal. - Medium The band for the first echo evaluation has an average width. - High The band for the first echo evaluation is broad. The evaluation jumps earlier to the next echo or distortion signal.

Selection
- Low
- Medium
- High

Factory setting Medium

Output mode

Navigation Setup → Advanced setup → Output mode

Description Select output mode between: Ullage = The remaining space in the tank or silo is indicated. or Level linearized = The level is indicated (more precisely: the linearized value if a linearization has been activated).

Selection
- Ullage
- Level linearized

Factory setting Level linearized

Blocking distance

Navigation Setup → Advanced setup → Blocking distance

Description Specify blocking distance (BD). No signals are evaluated within the blocking distance. Therefore, BD can be used to suppress interference signals in the vicinity of the antenna. Note: The measuring range should not overlap with the blocking distance.

User entry 0.0 to 20 m

Factory setting An automatic Blocking distance (→ 81) of at least 0.1 m (0.33 ft) is configured as standard. However, this can be overwritten manually (0 m (0 ft) is also permitted). Automatic calculation of the Blocking distance = Empty calibration - Full calibration - 0.2 m (0.656 ft).
Each time a new entry is made in the **Empty calibration** parameter or **Full calibration** parameter, the **Blocking distance** parameter is recalculated automatically using this formula.
If the result of the calculation is a value < 0.1 m (0.33 ft), the Blocking distance of 0.1 m (0.33 ft) will continue to be used.

Level correction

Navigation Setup → Advanced setup → Level correction

Description The measured level is corrected by this value to compensate for a constant level error. Level correction > 0: The level is increased by this value. Level correction < 0: The level is decreased by this value.

User entry −25 to 25 m

Factory setting 0.0 m

Evaluation distance

Navigation Setup → Advanced setup → Evaluation distance

Description Extended signal search area. Is generally greater than the empty distance. If the signal is found below the empty distance, '0' (empty) is indicated as measured value. Only for signals, detected below the 'Evaluation distance', the error 'Echo Lost' is issued. e.g. flow measurement in overflow weirs.

User entry 0 to 21.8 m

Factory setting 21.8 m

Linearization type

Navigation Setup → Advanced setup → Linearization type

Description

Linearization types
Meaning of the options:
- None:
  The level is output in the level unit without being converted (linearized) beforehand.
- Table:
  The relationship between the measured level L and the output value (volume/flow/weight) is defined by a linearization table. This table consists of up to 32 value pairs, i.e. "level - volume" or "level - flow" or "level - weight".
- Note:
  Please use the DTM module to create/modify a linearization table.

Selection
- None
- Table

Factory setting None

Level linearized

Navigation Setup → Advanced setup → Level linearized

Description Currently measured level.

User interface Signed floating-point number

"Safety settings" submenu

Navigation Setup → Advanced setup → Safety settings

Delay time echo lost

Navigation Setup → Advanced setup → Safety settings → Delay time echo lost

Description Define the delay time in the case of an echo loss. After an echo loss, the device waits for the time specified in this parameter before reacting as specified in the Diagnostic echo lost parameter. This helps to avoid interruptions of the measurement by short-term interferences.

User entry 0 to 600 s

Factory setting 0 s

Diagnostics echo lost

Navigation Setup → Advanced setup → Safety settings → Diagnostics echo lost

Description At this parameter it can be set if in case of a lost echo a warning or an alarm is issued.

Selection
- Warning
- Alarm

Factory setting Warning

"Current output" submenu

Navigation Setup → Advanced setup → Current output

Output current

Navigation Setup → Advanced setup → Current output → Output current

Description Shows the actual calculated value of the output current.

User interface 3.59 to 22.5 mA

Damping output

Navigation Setup → Advanced setup → Current output → Damping output

Description Define time constant τ for the damping of the output current. Fluctuations of the measured value affect the output current with an exponential delay, the time constant τ of which is defined in this parameter. With a small time constant the output reacts immediately to changes of the measrued value. With a big time constant the reaction of the output is more delayed. For τ = 0 there is no damping.

User entry 0.0 to 300 s

Factory setting 1.0 s

Turn down

Navigation Setup → Advanced setup → Current output → Turn down

Description Using the turn down functionality it is possible to map a section of the measuring range to the total range of the output current (4-20mA). The section is defined by the '4 mA value' and '20 mA value' parameters. Without the turn down, the complete measuring range (0 to 100%) is mapped to the current output (4 to 20mA).

Selection
- Off
- On

Factory setting Off

4 mA value

Navigation Setup → Advanced setup → Current output → 4 mA value

Description Value for 4-mA at 'Turn down parameter' = On Using the turn down functionality it is possible to map a section of the measuring range to the total range of the output current (4-20mA). The section is defined by the '4 mA value' and '20 mA value' parameters. Without the turn down, the complete measuring range (0 to 100%) is mapped to the current output (4 to 20mA). Note: If '20 mA value' is smaller than '4 mA value', the current output is inverted, which means that an increase of the process variable results in a decrease of the output current.

User entry Signed floating-point number

Factory setting 0 m

20 mA value

Navigation Setup → Advanced setup → Current output → 20 mA value

Description Value for 20-mA at 'Turn down' parameter = On Using the turn down functionality it is possible to map a section of the measuring range to the total range of the output current (4-20mA). The section is defined by the '4 mA value' and '20 mA value' parameters. Without the turn down, the complete measuring range (0 to 100%) is mapped to the current output (4 to 20mA). Note: If '20 mA value' is smaller than '4 mA value', the current output is inverted, which means that an increase of the process variable results in a decrease of the output current.

User entry Signed floating-point number

Factory setting 20 m

Trim

Navigation Setup → Advanced setup → Current output → Trim

Description Select action for the recalibration of the current output. The trim can be used to compensate a drift of the current output (which might be caused by very long cables or by a connected Ex barrier, for example). Steps of the trim: 1. Select 'Trim' = 4 mA. 2. Measure the output current with a gauged multimeter. If it is not equal to 4 mA: Enter measured value in the 'Trim value low' parameter. 3. Select 'Trim' = 20 mA. 4. Measure the output current with a gauged multimeter. If it is not equal to 20 mA: Enter the measured current into the 'Trim value high' parameter. 5. Select 'Trim' = Calculate. The device calculates the new scaling of the output current and stores it in the RAM.

Selection
- Off
- 4 mA
- 20 mA
- Calculate
- Reset

Factory setting Off

Trim value high

Navigation Setup → Advanced setup → Current output → Trim value high

Description Enter upper measured value for the trim (around 20 mA). After this value has been entered: Select 'Trim' = Calculate. This initiates the recalibration of the current output.

User entry 18.0 to 22.0 mA

Factory setting 20.0 mA

Trim value low

Navigation Setup → Advanced setup → Current output → Trim value low

Description Enter lower measured value for the trim (around 4 mA). After this value has been entered: Select 'Trim' = Calculate. This initiates the recalibration of the current output.

User entry 3.0 to 5.0 mA

Factory setting 4.0 mA

"Administration" submenu

Navigation Setup → Advanced setup → Administration

Define access code	
Navigation	Setup → Advanced setup → Administration → Define access code
Description	Define release code for changing device operation mode. If the factory setting is not changed or 0000 is defined as the access code, the device works in maintenance mode without write-protection and the configuration data of the device can then always be modified. Once the access code has been defined, write-protected devices can only be changed to maintenance mode if the access code is entered in the 'Enter access code' parameter. The new access code is only valid after it has been confirmed in the 'Confirm access code' parameter. Please contact your Endress+Hauser Sales Center if you lose your access code.
User entry	0 to 9 999
Factory setting	0

Confirm access code	
Navigation	Setup → Advanced setup → Administration → Confirm access code
Description	Re-enter the entered access code to confirm.
User entry	0 to 9 999
Factory setting	0

Device reset	
Navigation	Setup → Advanced setup → Administration → Device reset
Description	Reset the device configuration - either entirely or in part - to a defined state.
Selection	▪ Cancel ▪ To factory defaults
Factory setting	Cancel

Free field special

Navigation Setup → Advanced setup → Administration → Free field special

Description Switch the free field option on or off. This parameter can be switched on for free field applications (e.g. below bridges). Caution: The customer map (if one exists) is reset to the factory map!.

Selection
- Off
- On

Factory setting Off

14.3.2 "Communication" submenu

Navigation Setup → Communication

HART short tag

Navigation Setup → Communication → HART short tag

Description Short description of the measuring point

User entry Max. 8 characters: A ... Z, 0 ... 9 and some special characters (for example, punctuation marks, @,%)

Factory setting SHORTTAG

HART address

Navigation Setup → Communication → HART address

User entry 0 to 63

Factory setting 0

No. of preambles

Navigation Setup → Communication → No. of preambles

Description Defines the number o preambles in the HART telegram.

User entry 5 to 20

Factory setting 5

Device type

Navigation Setup → Communication → Device type

Description Shows the device type with which the measuring device is registered with the HART Communication Foundation.

Additional information

Device revision

Navigation Setup → Communication → Device revision

Description Shows the device revision with which the device is registered with the HART Communication Foundation.

Device ID

Navigation Setup → Communication → Device ID

Description Shows the device ID for identifying the device in a HART network.

HART revision

Navigation Setup → Communication → HART revision

Description Indicates HART revision of the device

HART descriptor

Navigation Setup → Communication → HART descriptor

Description Enter descriptor for the measuring point

Factory setting Descriptor

HART message

Navigation Setup → Communication → HART message

Description Define HART message which is sent via the HART protocol if requested by the master

Factory setting Message

Hardware revision

Navigation Setup → Communication → Hardware revision

Description Indicates hardware revision of the device

Software revision

Navigation Setup → Communication → Software revision

Description Indicates software revision of the device

HART date code

Navigation Setup → Communication → HART date code

Description Enter date of the last configuration change

Additional information Date format: YYYY-MM-DD

Level linearized (PV)

Navigation Setup → Communication → Level linearized (PV)

Description Displays linearized level

User interface Signed floating-point number

Factory setting 0 m

Additional information The unit is defined by the Unit after linearization parameter

Distance (SV)

Navigation Setup → Communication → Distance (SV)

User interface Signed floating-point number

Factory setting 0 m

Relative echo amplitude (TV)

Navigation Setup → Communication → Relative echo amplitude (TV)

User interface Signed floating-point number

Factory setting 0 dB

Temperature (QV)

Navigation Setup → Communication → Temperature (QV)

User interface Signed floating-point number

Factory setting −273.15 °C

"Bluetooth configuration" submenu

Navigation Setup → Communication → Bluetooth configuration

Bluetooth mode

Navigation Setup → Communication → Bluetooth configuration → Bluetooth mode

Description Enable or disable Bluetooth function.. Remark: Switching to position 'Off' will disable remote access via the app with immediate effect. To re-establish a Bluetooth connection via the app: Please follow the advices in the manual.

Selection
- Off
- On

Factory setting On

14.4 "Diagnostics" submenu

Navigation Diagnostics

Actual diagnostics

Navigation Diagnostics → Actual diagnostics

Description Displays current diagnostic message. If several messages are active at the same time, the messages with the highest priority is displayed.

Previous diagnostics

Navigation Diagnostics → Previous diagnostics

Description Displays the last diagnostic message, with its diagnostic information, which has been active before the current message. The condition displayed may still apply.

Delete previous diagnostic

Navigation Diagnostics → Delete previous diagnostic

Description Delete previous diagnostic message? It is possible that the diagnostic message remains valid.

Selection
- No
- Yes

Factory setting No

Signal quality

Navigation Diagnostics → Signal quality

Description Displays the signal quality of the level echo. Meaning of the display options - Strong: The evaluated echo exceeds the threshold by at least 10 dB. - Medium: The evaluated echo exceeds the threshold by at least 5 dB. - Weak: The evaluated echo exceeds the threshold by less than 5 dB. - No signal: The device does not find an usable echo. The signal quality indicated in this parameter always refers to the currently evaluated echo, either the level echo or the tank bottom echo. In case of a lost echo ('Signal quality' = No signal) the device generates the following error message: 'Diagnostic echo lost' = Warning (factory setting) or Alarm, if the other option has been selected in 'Diagnostic echo lost'.

User interface

- Strong
- Medium
- Weak
- No signal

14.4.1 "Device information" submenu

Navigation Diagnostics → Device information

Device name

Navigation Diagnostics → Device information → Device name

Description Shows the name of the transmitter.

Factory setting Micropilot FMR20

Firmware version

Navigation Diagnostics → Device information → Firmware version

Description Shows the device firmware version installed.

Extended order code 1

Navigation Diagnostics → Device information → Extended order code 1

Description Shows the 1st part of the extended order code.

Extended order code 2

Navigation Diagnostics → Device information → Extended order code 2

Description Shows the 2nd part of the extended order code.

Extended order code 3

Navigation Diagnostics → Device information → Extended order code 3

Description Shows the 3rd part of the extended order code.

Order code

Navigation Diagnostics → Device information → Order code

Description Shows the device order code.

Serial number

Navigation Diagnostics → Device information → Serial number

Description Shows the serial number of the measuring device.

ENP version

Navigation Diagnostics → Device information → ENP version

Description Shows the version of the electronic nameplate (ENP).

14.4.2 "Simulation" submenu

Navigation Diagnostics → Simulation

Simulation

Navigation Diagnostics → Simulation → Simulation

Description Select process variable to be simulated. The Simulation is used to simulate specific measuring values or other conditions. This helps to check the correct configuration of the device and connected control units.

Selection
- Off
- Current output
- Distance

Factory setting Off

Value current output

Navigation Diagnostics → Simulation → Value current output 1

Description Defines the value of the simulated output current.

User entry 3.59 to 22.5 mA

Factory setting 3.59 mA

Process variable value

Navigation Diagnostics → Simulation → Process variable value

Description Value of the simulated process variable. Downstream measured value processing and the signal output use this simulation value. In this way, users can verify whether the measuring device has been configured correctly.

User entry 0 to 21.8 m

Factory setting 0 m

Index

0 ... 9
4 mA value (Parameter) 85
20 mA value (Parameter) 85

A
Access status tooling (Parameter) 79
Accessories
  Communication-specific 66
  Device-specific 45
  Service-specific 66
  System components 67
Actual diagnostics (Parameter) 93
Administration (Submenu) 87
Advanced setup (Submenu) 79
Application 8

B
Blocking distance (Parameter) 81
Bluetooth configuration (Submenu) 92
Bluetooth mode (Parameter) 92
Bluetooth® wireless technology 26

C
Changing velocity (Parameter) 80
Communication (Submenu) 89
Configuration of a flow measurement 35
Configuration of a level measurement 34
Configuring level measurement 34
Confirm access code (Parameter) 87
Confirm distance (Parameter) 78
Current output (Submenu) 84

D
Damping output (Parameter) 84
Define access code (Parameter) 87
Delay time echo lost (Parameter) 83
Delete previous diagnostic (Parameter) 93
Designated use 8
Device ID (Parameter) 90
Device information (Submenu) 95
Device name (Parameter) 95
Device replacement 44
Device reset (Parameter) 87
Device revision (Parameter) 90
Device tag (Parameter) 76
Device type (Parameter) 89
Diagnostic event in the operating tool 41
Diagnostic event in the RIA15 41
Diagnostics (Submenu) 93
Diagnostics echo lost (Parameter) 83
Disposal 44
Distance (Parameter) 77
Distance (SV) (Parameter) 91
Distance unit (Parameter) 76
Document
  Function 5
Document function 5

E
Empty calibration (Parameter) 76
ENP version (Parameter) 96
Enter access code (Parameter) 79
Evaluation distance (Parameter) 81
Evaluation sensitivity (Parameter) 79
Extended order code 1 (Parameter) 95
Extended order code 2 (Parameter) 95
Extended order code 3 (Parameter) 95

F
Field of application
  Residual risks 8
Firmware version (Parameter) 95
First Echo sensitivity (Parameter) 80
Flow measurement configuration 35
Free field special (Parameter) 88
Full calibration (Parameter) 76

H
Hardware revision (Parameter) 91
HART address (Parameter) 89
HART date code (Parameter) 91
HART descriptor (Parameter) 90
HART message (Parameter) 90
HART protocol 26
HART revision (Parameter) 90
HART short tag (Parameter) 89

L
Level (Parameter) 77
Level correction (Parameter) 81
Level linearized (Parameter) 82
Level linearized (PV) (Parameter) 91
Linearization type (Parameter) 82

M
Maintenance 43
Mapping end point (Parameter) 78
Media 8
Menu
  Setup 76

N
No. of preambles (Parameter) 89

O
Operational safety 9
Order code (Parameter) 96
Output current (Parameter) 84
Output mode (Parameter) 80

P
Present mapping (Parameter) 78
Previous diagnostics (Parameter) 93
Process variable value (Parameter) 97
Product safety 9

R

Relative echo amplitude (TV) (Parameter) 92
Repair concept 44
Replacing a device 44
Requirements concerning the staff 8
Return 44

S

Safety instructions
Basic 8
Safety Instructions (XA) 6
Safety settings (Submenu) 83
Serial number (Parameter) 96
Setup (Menu) 76
Signal quality (Parameter) 77, 93
Simulation (Parameter) 97
Simulation (Submenu) 97
Software revision (Parameter) 91
Submenu
Administration 87
Advanced setup 79
Bluetooth configuration 92
Communication 89
Current output 84
Device information 95
Diagnostics 93
Safety settings 83
Simulation 97

T

Temperature (QV) (Parameter) 92
Trim (Parameter) 85
Trim value high (Parameter) 86
Trim value low (Parameter) 86
Turn down (Parameter) 84

U

Use of the measuring device
see Designated use
Using measuring devices
Borderline cases 8
Incorrect use 8

V

Value current output 1 (Parameter) 97

W

Workplace safety 9



www.addresses.endress.com

Endress+Hauser

People for Process Automation