BA01050F/00/EN/07.18
71394705
2018-04-12

01.02.zz (Device firmware)

Operating Instructions
Micropilot FMR53, FMR54 HART

Free space radar

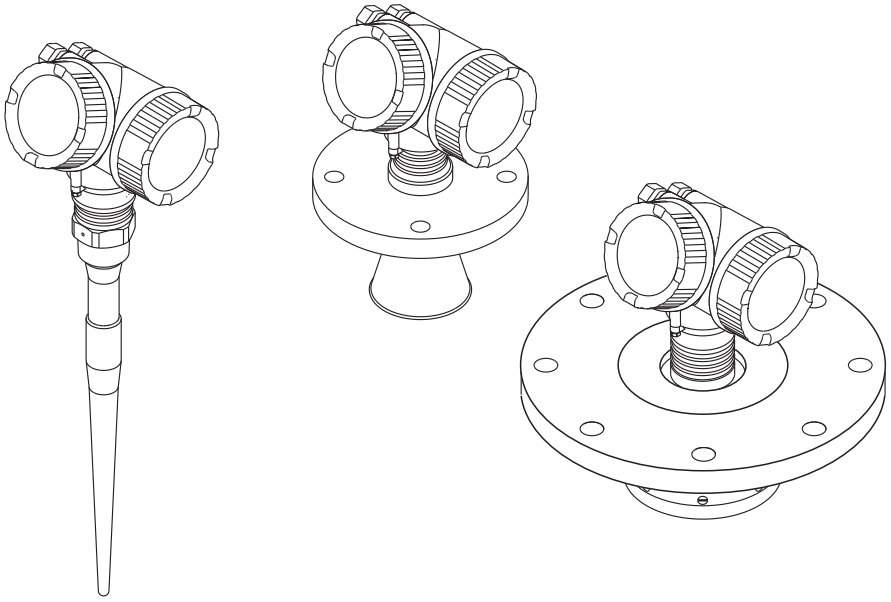

Endress+Hauser
People for Process Automation

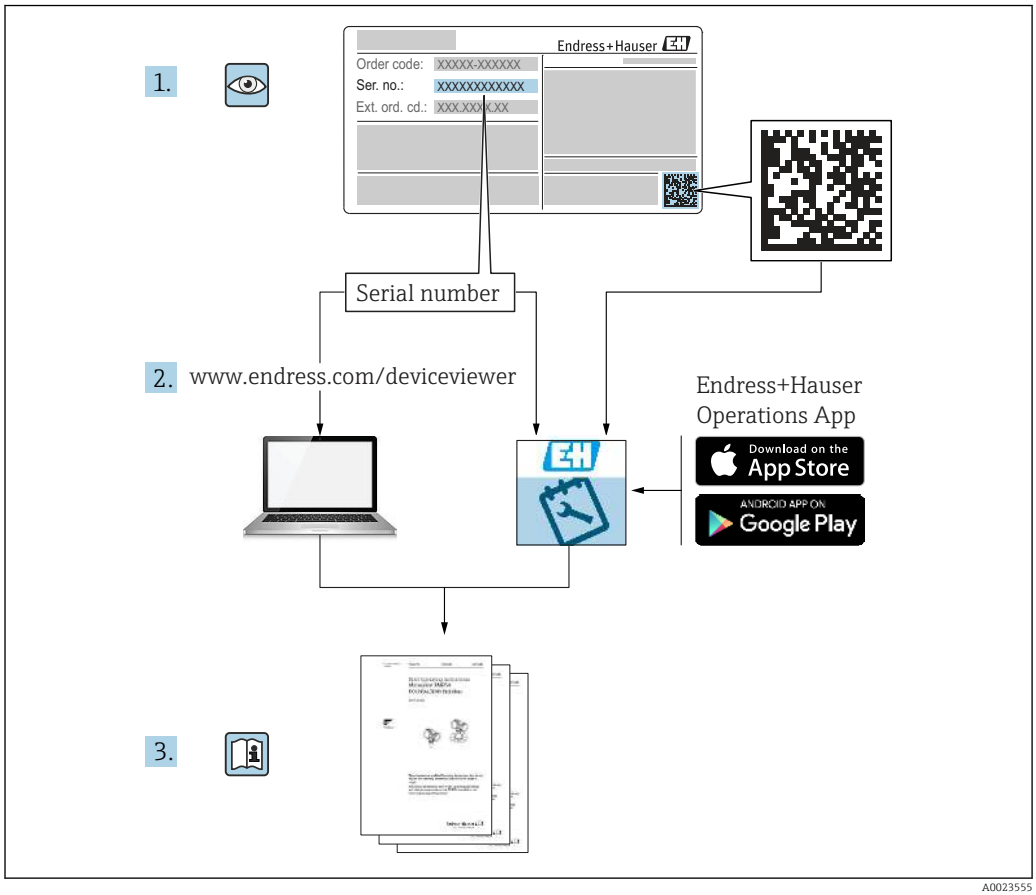
1.
Endress+Hauser
Order code: XXXXX-XXXXXX
Ser. no.: XXXXXXXXXXX
Ext. ord. cd.: XXX XXX XX XX
Serial number
2. www.endress.com/deviceviewer
Endress+Hauser
Operations App
Download on the App Store
ANDROID APP ON Google Play
3.
A0023555

Table of contents

1 Wichtige Hinweise zum Dokument 5
1.1 Document function 5
1.2 Symbols 5
1.2.1 Safety symbols 5
1.2.2 Electrical symbols 5
1.2.3 Tool symbols 5
1.2.4 Symbols for certain types of information 6
1.2.5 Symbols in graphics 6
1.2.6 Symbols at the device 7
1.3 Additional documentation 7
1.4 Terms and abbreviations 8
1.5 Registered trademarks 9

2 Basic safety instructions 10
2.1 Requirements for the personnel 10
2.2 Designated use 10
2.3 Workplace safety 11
2.4 Operational safety 11
2.5 Product safety 11
2.5.1 CE mark 11
2.5.2 EAC conformity 11
2.6 Safety Instructions (XA) 12

3 Product description 15
3.1 Product design 15
3.1.1 Micropilot FMR53 15
3.1.2 Micropilot FMR54 15
3.1.3 Electronics housing 16

4 Incoming acceptance and product identification 17
4.1 Incoming acceptance 17
4.2 Product identification 17
4.2.1 Nameplate 18

5 Storage, Transport 19
5.1 Storage conditions 19
5.2 Transport product to the measuring point 19

6 Installation 20
6.1 Installation conditions 20
6.1.1 Mounting position 20
6.1.2 Vessel installations 21
6.1.3 Reduction of interference echoes 21
6.1.4 Measurement in a plastic vessel 22
6.1.5 Optimization options 22
6.1.6 Beam angle 23
6.2 Measuring conditions 24
6.3 Mounting cladded flanges 25
6.4 Installation in vessel (free space) 25
6.4.1 Rod antenna (FMR53) 25
6.4.2 Horn antenna (FMR54) 27
6.4.3 Planar antenna (FMR54) 28
6.5 Installation in stilling well 29
6.5.1 Recommendations for the stilling well 29
6.5.2 Examples for the construction of stilling wells 30
6.6 Installation in bypass 31
6.6.1 Recommendations for the bypass pipe 31
6.6.2 Example for the construction of a bypass 32
6.7 Container with heat insulation 33
6.8 Turning the transmitter housing 33
6.9 Turning the display 34
6.9.1 Opening cover 34
6.9.2 Turning the display module 34
6.9.3 Closing electronics compartment cover 35
6.10 Post-installation check 35

7 Electrical connection 36
7.1 Connection conditions 36
7.1.1 Terminal assignment 36
7.1.2 Cable specification 42
7.1.3 Device plug connectors 43
7.1.4 Supply voltage 44
7.1.5 Overvoltage protection 46
7.2 Connecting the measuring device 46
7.2.1 Opening connection compartment cover 47
7.2.2 Connecting 47
7.2.3 Plug-in spring-force terminals 48
7.2.4 Closing connection compartment cover 48
7.3 Post-connection check 49

8 Operation options 50
8.1 Overview 50
8.1.1 Local operation 50
8.1.2 Operation with remote display and operating module FHX50 51
8.1.3 Operation via Bluetooth® wireless technology 52
8.1.4 Remote operation 53
8.2 Structure and function of the operating menu 54
8.2.1 Structure of the operating menu 54
8.2.2 User roles and related access authorization 56
8.2.3 Data access - Security 56

8.3 Display and operating module 61
8.3.1 Display appearance 61
8.3.2 Operating elements 64
8.3.3 Entering numbers and text 65
8.3.4 Opening the context menu 67
8.3.5 Envelope curve on the display and operating module 68

9 System integration via HART protocol 69
9.1 Overview of the Device Description files (DD) 69
9.2 Measured values via HART protocol 69

10 Commissioning via SmartBlue (app) 70
10.1 Requirements 70
10.2 Commissioning 70

11 Commissioning via wizard 74

12 Commissioning via operating menu 75
12.1 Installation and function check 75
12.2 Setting the operating language 75
12.3 Configuration of a level measurement 76
12.4 Recording the reference curve 78
12.5 Configuration of the on-site display 79
12.5.1 Factory settings of the on-site display 79
12.5.2 Adjustment of the on-site display . . . 79
12.6 Configuration of the current outputs 79
12.6.1 Factory setting of the current outputs 79
12.6.2 Adjustment of the current outputs . . . 79
12.7 Configuration management 80
12.8 Protection of the settings against unauthorized changes 81

13 Diagnostics and troubleshooting . . . 82
13.1 General trouble shooting 82
13.1.1 General errors 82
13.1.2 Error - SmartBlue operation 83
13.1.3 Parametrization errors 83
13.2 Diagnostic information on local display 85
13.2.1 Diagnostic message 85
13.2.2 Calling up remedial measures 87
13.3 Diagnostic event in the operating tool 88
13.4 Diagnostic list 89
13.5 Overview of diagnostic events 90
13.6 Event logbook 91
13.6.1 Event history 91
13.6.2 Filtering the event logbook 92
13.6.3 Overview of information events 92
13.7 Firmware history 93

14 Maintenance 94
14.1 Exterior cleaning 94
14.2 Replacing seals 94

15 Repairs 95
15.1 General information on repairs 95
15.1.1 Repair concept 95
15.1.2 Repairs to Ex-approved devices 95
15.1.3 Replacement of an electronics module 95
15.1.4 Replacement of a device 95
15.2 Spare parts 96
15.3 Return 96
15.4 Disposal 96

16 Accessories 97
16.1 Device-specific accessories 97
16.1.1 Weather protection cover 97
16.1.2 Antenna extension FAR10 (for FMR54) 98
16.1.3 Remote display FHX50 99
16.1.4 Overvoltage protection 100
16.1.5 Gas-tight feedthrough 100
16.1.6 Bluetooth module for HART devices 101
16.2 Communication-specific accessories 102
16.3 Service-specific accessories 103
16.4 System components 104

17 Operating menu 105
17.1 Overview of the operating menu (SmartBlue) 105
17.2 Overview of the operating menu (display module) 110
17.3 Overview of the operating menu (operating tool) 117
17.4 "Setup" menu 123
17.4.1 "Mapping" wizard 131
17.4.2 "Advanced setup" submenu 133
17.5 "Diagnostics" menu 178
17.5.1 "Diagnostic list" submenu 180
17.5.2 "Event logbook" submenu 181
17.5.3 "Device information" submenu 182
17.5.4 "Measured values" submenu 185
17.5.5 "Data logging" submenu 187
17.5.6 "Simulation" submenu 190
17.5.7 "Device check" submenu 195
17.5.8 "Heartbeat" submenu 197

Index 198

1 Wichtige Hinweise zum Dokument

1.1 Document function

These Operating Instructions contain all the information that is required in various phases of the life cycle of the device: from product identification, incoming acceptance and storage, to mounting, connection, operation and commissioning through to troubleshooting, maintenance and disposal.

1.2 Symbols

1.2.1 Safety symbols

Symbol	Meaning
DANGER	**DANGER!** This symbol alerts you to a dangerous situation. Failure to avoid this situation will result in serious or fatal injury.
WARNING	**WARNING!** This symbol alerts you to a dangerous situation. Failure to avoid this situation can result in serious or fatal injury.
CAUTION	**CAUTION!** This symbol alerts you to a dangerous situation. Failure to avoid this situation can result in minor or medium injury.
NOTICE	**NOTE!** This symbol contains information on procedures and other facts which do not result in personal injury.

1.2.2 Electrical symbols

Symbol	Meaning
⎓	Direct current
~	Alternating current
⎓ ~	Direct current and alternating current
⏚	**Ground connection** A grounded terminal which, as far as the operator is concerned, is grounded via a grounding system.
⏚	**Protective Earth (PE)** A terminal which must be connected to ground prior to establishing any other connections. The ground terminals are situated inside and outside the device: ▪ Inner ground terminal: Connects the protectiv earth to the mains supply. ▪ Outer ground terminal: Connects the device to the plant grounding system.

1.2.3 Tool symbols

Symbol	Meaning
 A0013442	Torx screwdriver
 A0011220	Flat blade screwdriver

Symbol	Meaning
 A0011219	Cross-head screwdriver
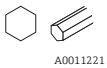 A0011221	Allen key
 A0011222	Hexagon wrench

1.2.4 Symbols for certain types of information

Symbol	Meaning
	**Permitted** Procedures, processes or actions that are permitted.
	**Preferred** Procedures, processes or actions that are preferred.
	**Forbidden** Procedures, processes or actions that are forbidden.
	**Tip** Indicates additional information.
	Reference to documentation.
	Reference to page.
	Reference to graphic.
	Notice or individual step to be observed.
1., 2., 3...	Series of steps.
	Result of a step.
	Help in the event of a problem.
	Visual inspection.

1.2.5 Symbols in graphics

Symbol	Meaning
1, 2, 3 ...	Item numbers
1., 2., 3...	Series of steps
A, B, C, ...	Views
A-A, B-B, C-C, ...	Sections
	**Hazardous area** Indicates a hazardous area.
	**Safe area (non-hazardous area)** Indicates the non-hazardous area.

1.2.6 Symbols at the device

Symbol	Meaning
	**Safety instructions** Observe the safety instructions contained in the associated Operating Instructions.
	**Temperature resistance of the connection cables** Specifies the minimum value of the temperature resistance of the connection cables.

1.3 Additional documentation

Document	Purpose and content of the document
Technical Information TI01041F (FMR53, FMR54)	**Planning aid for your device** The document contains all the technical data on the device and provides an overview of the accessories and other products that can be ordered for the device.
Brief Operating Instructions KA01101F (FMR53/FMR54, HART)	**Guide that takes you quickly to the 1st measured value** The Brief Operating Instructions contain all the essential information from incoming acceptance to initial commissioning.
Description of Device Parameters GP01014F (FMR5x, HART)	**Reference for your parameters** The document provides a detailed explanation of each individual parameter in the operating menu. The description is aimed at those who work with the device over the entire life cycle and perform specific configurations.
Special documentation SD01087F	**Functional Safety Manual** The document is part of the Operating Instructions and serves as a reference for application-specific parameters and notes.
Special documentation SD01870F	**Manual for Heartbeat Verification and Heartbeat Monitoring** The document contains descriptions of the additonal parameters and technical data which are available with the **Heartbeat Verification** and **Heartbeat Monitoring** application packages.

For an overview of the scope of the associated Technical Documentation, refer to the following:
- The *W@M Device Viewer* : Enter the serial number from the nameplate (www.endress.com/deviceviewer)
- The *Endress+Hauser Operations App*: Enter the serial number from the nameplate or scan the 2-D matrix code (QR code) on the nameplate.

1.4 Terms and abbreviations

Term/abbreviation	Explanation
BA	Document type "Operating Instructions"
KA	Document type "Brief Operating Instructions"
TI	Document type "Technical Information"
SD	Document type "Special Documentation"
XA	Document type "Safety Instructions"
PN	Nominal pressure
MWP	Maximum Working Pressure The MWP can also be found on the nameplate.
ToF	Time of Flight
FieldCare	Scalable software tool for device configuration and integrated plant asset management solutions
DeviceCare	Universal configuration software for Endress+Hauser HART, PROFIBUS, FOUNDATION Fieldbus and Ethernet field devices
DTM	Device Type Manager
DD	Device Description for HART communication protocol
ε_r (DC value)	Relative dielectric constant
Operating tool	The term "operating tool" is used in place of the following operating software: ▪ FieldCare / DeviceCare, for operation via HART communication and PC ▪ SmartBlue (app), for operation using an Android or iOS smartphone or tablet.
BD	Blocking Distance; no signals are analyzed within the BD.
PLC	Programmable Logic Controller
CDI	Common Data Interface
PFS	Pulse Frequence Status (Switching output)

1.5 Registered trademarks

HART®
Registered trademark of the FieldComm Group, Austin, USA

Bluetooth®
The Bluetooth® word mark and logos are registered trademarks owned by the Bluetooth SIG, Inc. and any use of such marks by Endress+Hauser is under license. Other trademarks and trade names are those of their respective owners.

Apple®
Apple, the Apple logo, iPhone, and iPod touch are trademarks of Apple Inc., registered in the U.S.and other countries. App Store is a service mark of Apple Inc.

Android®
Android, Google Play and the Google Play logo are trademarks of Google Inc.

KALREZ®, VITON®
Registered trademark of DuPont Performance Elastomers L.L.C., Wilmington, USA

TEFLON®
Registered trademark of E.I. DuPont de Nemours & Co., Wilmington, USA

TRI CLAMP®
Registered trademark of Alfa Laval Inc., Kenosha, USA

2 Basic safety instructions

2.1 Requirements for the personnel

The personnel for installation, commissioning, diagnostics and maintenance must fulfill the following requirements:
- Trained, qualified specialists must have a relevant qualification for this specific function and task.
- Are authorized by the plant owner/operator.
- Are familiar with federal/national regulations.
- Before starting work, read and understand the instructions in the manual and supplementary documentation as well as the certificates (depending on the application).
- Follow instructions and comply with basic conditions.

The operating personnel must fulfill the following requirements:
- Are instructed and authorized according to the requirements of the task by the facility's owner-operator.
- Follow the instructions in this manual.

2.2 Designated use

Application and measured materials
The measuring device described in these Operating Instructions is intended for the continuous, contactless level measurement of liquids, pastes and sludge. Because of its operating frequency of about 6 GHz, a maximum radiated pulsed power of 12.03 mW and an average power output of 0.024 mW, the operation is completely harmless to humans and animals.

Observing the limit values specified in the "Technical data" and listed in the Operating Instructions and supplementary documentation, the measuring device may be used for the following measurements only:
- Measured process variables: level, distance, signal strength
- Calculated process variables: Volume or mass in arbitrarily shaped vessels; flow through measuring weirs or flumes (calculated from the level by the linearization functionality)

To ensure that the measuring device remains in proper condition for the operation time:
- Use the measuring device only for measured materials against which the process-wetted materials are adequately resistant.
- Observe the limit values in "Technical data".

Incorrect use
The manufacturer is not liable for damage caused by improper or non-designated use.

Verification for borderline cases:
- For special measured materials and cleaning agents, Endress+Hauser is glad to provide assistance in verifying the corrosion resistance of wetted materials, but does not accept any warranty or liability.

Residual risk
The electronics housing and its built-in components such as display module, main electronics module and I/O electronics module may heat to 80 °C (176 °F) during operation through heat transfer from the process as well as power dissipation within the electronics. During operation the sensor may assume a temperature near the temperature of the measured material.

Danger of burns due to heated surfaces!
- For high process temperatures: Install protection against contact in order to prevent burns.

2.3 Workplace safety

For work on and with the device:
- Wear the required personal protective equipment according to federal/national regulations.

2.4 Operational safety

Risk of injury.
- Operate the device in proper technical condition and fail-safe condition only.
- The operator is responsible for interference-free operation of the device.

Conversions to the device

Unauthorized modifications to the device are not permitted and can lead to unforeseeable dangers.
- If, despite this, modifications are required, consult with the manufacturer.

Repair

To ensure continued operational safety and reliability,
- Carry out repairs on the device only if they are expressly permitted.
- Observe federal/national regulations pertaining to repair of an electrical device.
- Use original spare parts and accessories from the manufacturer only.

Hazardous area

To eliminate a danger for persons or for the facility when the device is used in the hazardous area (e.g. explosion protection, pressure vessel safety):
- Based on the nameplate, check whether the ordered device is permitted for the intended use in the hazardous area.
- Observe the specifications in the separate supplementary documentation that is an integral part of these Instructions.

2.5 Product safety

This measuring device is designed in accordance with good engineering practice to meet state-of-the-art safety requirements, has been tested, and left the factory in a condition in which it is safe to operate. It meets general safety standards and legal requirements.

NOTICE

Loss of degree of protection by opening of the device in humid environments
- If the device is opened in a humid environment, the degree of protection indicated on the nameplate is no longer valid. This may also impair the safe operation of the device.

2.5.1 CE mark

The measuring system meets the legal requirements of the applicable EC guidelines. These are listed in the corresponding EC Declaration of Conformity together with the standards applied.

Endress+Hauser confirms successful testing of the device by affixing to it the CE mark.

2.5.2 EAC conformity

The measuring system meets the legal requirements of the applicable EAC guidelines. These are listed in the corresponding EAC Declaration of Conformity together with the standards applied.

Endress+Hauser confirms successful testing of the device by affixing to it the EAC mark.

2.6 Safety Instructions (XA)

Depending on the approval, the following Safety Instructions (XA) are supplied with the device. They are an integral part of the Operating Instructions.

Feature 010	Approval	Available for	Feature 020 "Power Supply; Output"				
			A [1]	B [2]	C [3]	E [4]/G [5]	K [6]/L [7]
BA	ATEX: II 1 G Ex ia IIC T6-T1 Ga	▪ FMR53 ▪ FMR54	XA00677F	XA00677F	XA00677F	XA00685F	-
BB	ATEX: II 1/2 G Ex ia IIC T6-T1 Ga/Gb	▪ FMR53 ▪ FMR54	XA00677F	XA00677F	XA00677F	XA00685F	-
BC	ATEX: II 1/2 G Ex d [ia] IIC T6-T1 Ga/Gb	▪ FMR53 ▪ FMR54	XA00680F	XA00680F	XA00680F	XA00688F	XA00680F
BD	ATEX: II 1/2/3 G Ex ic [ia Ga] IIC T6-T1 Ga/Gb/Gc	▪ FMR53 ▪ FMR54	XA00678F	XA00678F	XA00678F	XA00686F	XA00678F
BG	ATEX: II 3 G Ex nA IIC T6-T1 Gc	▪ FMR53 ▪ FMR54	XA00679F	XA00679F	XA00679F	XA00687F	XA00679F
BH	ATEX: II 3 G Ex ic IIC T6-T1 Gc	▪ FMR53 ▪ FMR54	XA00679F	XA00679F	XA00679F	XA00687F	XA00679F
BL	ATEX: II 1/2/3 G Ex nA [ia Ga] IIC T6-T1 Ga/Gb/Gc	▪ FMR53 ▪ FMR54	XA00678F	XA00678F	XA00678F	XA00686F	XA00678F
B2	ATEX: II 1/2 G Ex ia IIC T6-T1 Ga/Gb ATEX: II 1/2 D Ex ia IIIC Txx°C Da/Db	▪ FMR53 ▪ FMR54	XA00683F	XA00683F	XA00683F	XA00691F	-
B3	ATEX: II 1/2 G Ex d [ia] IIC T6-T1 Ga/Gb ATEX: II 1/2 D Ex ta IIIC Txx°C Da/Db	▪ FMR53 ▪ FMR54	XA00684F	XA00684F	XA00684F	XA00692F	XA00684F
B4	ATEX:II 1/2 G Ex ia IIC T6-T1 Ga/Gb ATEX: II 1/2 G Ex d [ia] IIC T6-T1 Ga/Gb	▪ FMR53 ▪ FMR54	XA00681F	XA00681F	XA00681F	XA00689F	-
CB	CSA C/US XP Cl.I Div.1 Gr.A-D	FMR54	XA01112F	XA01112F	XA01112F	XA01114F	-
CC	CSA C/US XP Cl.I Div.1 Gr.A-D	FMR54	XA01113F	XA01113F	XA01113F	XA01115F	XA01113F
C2	CSA C/US IS Cl.I,II,III Div.1 Gr.A-G, NI Cl.1 Div. 2, Ex ia	▪ FMR53 ▪ FMR54	XA01112F	XA01112F	XA01112F	XA01114F	-
C3	CSA C/US XP Cl.I,II,III Div.1 Gr.A-G, NI Cl.1 Div.2, Ex d	▪ FMR53 ▪ FMR54	XA01113F	XA01113F	XA01113F	XA01115F	XA01113F
FA	FM IS Cl.I Div.1 Gr.A-D	FMR54	XA01116F	XA01116F	XA01116F	XA01118F	-
FB	FM IS Cl.I,II,III Div.1 Gr.A-G, AEx ia, NI Cl.1 Div.2	▪ FMR53 ▪ FMR54	XA01116F	XA01116F	XA01116F	XA01118F	-
FC	FM XP Cl.I Div.1 Gr.A-D	FMR54	XA01117F	XA01117F	XA01117F	XA01119F	XA01117F
FD	FM XP Cl.I,II,III Div.1 Gr.A-G, AEx d, NI Cl.1 Div.2	▪ FMR53 ▪ FMR54	XA01117F	XA01117F	XA01117F	XA01119F	XA01117F
IA	IECEx: Ex ia IIC T6-T1 Ga	▪ FMR53 ▪ FMR54	XA00677F	XA00677F	XA00677F	XA00685F	-
IB	IECEx: Ex ia IIC T6-T1 Ga/Gb	▪ FMR53 ▪ FMR54	XA00677F	XA00677F	XA00677F	XA00685F	-
IC	IECEx: Ex d [ia] IIC T6-T1 Ga/Gb	▪ FMR53 ▪ FMR54	XA00680F	XA00680F	XA00680F	XA00688F	XA00680F
ID	IECEx: Ex ic [ia Ga] IIC T6-T1 Ga/Gb/Gc	▪ FMR53 ▪ FMR54	XA00678F	XA00678F	XA00678F	XA00686F	XA00678F
IG	IECEx: Ex nA IIC T6-T1 Gc	▪ FMR53 ▪ FMR54	XA00679F	XA00679F	XA00679F	XA00687F	XA00679F
IH	IECEx: Ex ic IIC T6-T1 Gc	▪ FMR53 ▪ FMR54	XA00679F	XA00679F	XA00679F	XA00687F	XA00679F
IL	IECEx: Ex nA [ia Ga] IIC T6-T1 Ga/Gb/Gc	▪ FMR53 ▪ FMR54	XA00678F	XA00678F	XA00678F	XA00686F	XA00678F

Feature 010	Approval	Available for	Feature 020 "Power Supply; Output"				
			A [1]	B [2]	C [3]	E [4]/G [5]	K [6]/L [7]
I2	IECEx: Ex ia IIC T6-T1 Ga/Gb IECEx: Ex ia IIIC Txx°C Da/Db	▪ FMR53 ▪ FMR54	XA00683F	XA00683F	XA00683F	XA00691F	-
I3	IECEx: Ex d [ia] IIC T6-T1 Ga/Gb IEXEx: Ex ta IIIC Txx°C Da/Db	▪ FMR53 ▪ FMR54	XA00684F	XA00684F	XA00684F	XA00692F	XA00684F
I4	IECEx: Ex ia IIC T6-T1 Ga/Gb IECEx: Ex d [ia] IIC T6-T1 Ga/Gb	▪ FMR53 ▪ FMR54	XA00681F	XA00681F	XA00681F	XA00689F	-
JC	JPN Ex d [ia] IIC T4 Ga/Gb	▪ FMR53 ▪ FMR54	XA01717F	XA01717F	-	-	-
JD	JPN Ex d [ia] IIC T1 Ga/Gb	FMR54	XA01717F	XA01717F	-	-	-
JE	JPN Ex d [ia] IIC T2 Ga/Gb	FMR54	XA01717F	XA01717F			
KA	KC Ex ia IIC T6 Ga	▪ FMR53 ▪ FMR54	XA01045F	XA01045F	XA01045F	XA01047F	-
KB	KC Ex ia IIC T6 Ga/Gb	▪ FMR53 ▪ FMR54	XA01045F	XA01045F	XA01045F	XA01047F	-
KC	KC Ex d[ia] IIC T6	▪ FMR53 ▪ FMR54	XA01046F	XA01046F	XA01046F	XA01048F	XA01046F
MA	INMETRO: Ex ia IIC T6 Ga	▪ FMR53 ▪ FMR54	XA01286F	XA01287F	XA01288F	XA01296F	-
MC	INMETRO: Ex d[ia] IIC T6 Ga/Gb	▪ FMR53 ▪ FMR54	XA01292F	XA01292F	XA01293F	XA01298F	XA01294F
MH	INMETRO: Ex ic IIC T6 Gc	▪ FMR53 ▪ FMR54	XA01289F	XA01290F	XA01291F	XA01297F	-
NA	NEPSI Ex ia IIC T6 Ga	▪ FMR53 ▪ FMR54	XA01199F	XA01199F	XA01199F	XA01208F	-
NB	NEPSI Ex ia IIC T6 Ga/Gb	▪ FMR53 ▪ FMR54	XA01199F	XA01199F	XA01199F	XA01208F	-
NC	NEPSI Ex d[ia] IIC T6 Ga/Gb	▪ FMR53 ▪ FMR54	XA01202F	XA01202F	XA01202F	XA01211F	XA01202F
NG	NEPSI Ex nA II T6 Gc	▪ FMR53 ▪ FMR54	XA01201F	XA01201F	XA01201F	XA01210F	XA01201F
NH	NEPSI Ex ic IIC T6 Gc	▪ FMR53 ▪ FMR54	XA01201F	XA01201F	XA01201F	XA01210F	XA01201F
N2	NEPSI Ex ia IIC T6 Ga/Gb, Ex iaD 20/21 T85... 90oC	▪ FMR53 ▪ FMR54	XA01205F	XA01205F	XA01205F	XA01214F	-
N3	NEPSI Ex d[ia] IIC T6 Ga/Gb, DIP A20/21 T85...90oC IP66	▪ FMR53 ▪ FMR54	XA01206F	XA01206F	XA01206F	XA01215F	XA01206F
8A	FM/CSA IS+XP Cl.I,II,III Div.1 Gr.A-G	▪ FMR53 ▪ FMR54	▪ XA01112F ▪ XA01113F ▪ XA01116F ▪ XA01117F	▪ XA01112F ▪ XA01113F ▪ XA01116F ▪ XA01117F	▪ XA01112F ▪ XA01113F ▪ XA01116F ▪ XA01117F	▪ XA01114F ▪ XA01115F ▪ XA01118F ▪ XA01119F	-

1) 2-wire; 4-20mA HART
2) 2-wire; 4-20mA HART, switch output
3) 2-wire; 4-20mA HART, 4-20mA
4) 2-wire; FOUNDATION Fieldbus, switch output
5) 2-wire; PROFIBUS PA, switch output
6) 4-wire 90-253VAC; 4-20mA HART
7) 4-wire 10.4-48VDC; 4-20mA HART

For certified devices the relevant Safety Instructions (XA) are indicated on the nameplate.

If the device is prepared for the remote display FHX50 (product structure: feature 030: Display, Operation", option L or M), the Ex marking of some certificates changes according to the following table [1]:

Feature 010 ("Approval")	Feature 030 ("Display, Operation")	Ex marking
BG	L, M or N	ATEX II 3G Ex nA [ia Ga] IIC T6-T1 Gc
BH	L, M or N	ATEX II 3G Ex ic [ia Ga] IIC T6-T1 Gc
B3	L, M or N	ATEX II 1/2G Ex d [ia] IIC T6-T1 Ga/Gb, ATEX II 1/2D Ex ta [ia Db] IIIC Txx°C Da/Db
IG	L, M or N	IECEx Ex nA [ia Ga] IIC T6-T1 Gc
IH	L, M or N	IECEx Ex ic [ia Ga] IIC T6-T1 Gc
I3	L, M or N	IECEx Ex d [ia] IIC T6-T1 Ga/Gb, IECEx Ex ta [ia Db] IIIC Txx°C Da/Db
MH	L, M or N	Ex ic [ia Ga] IIC T6 Gc
NG	L, M or N	NEPSI Ex nA [ia Ga] IIC T6-T1 Gc
NH	L, M or N	NEPSI Ex ic [ia Ga] IIC T6-T1 Gc
N3	L, M or N	NEPSI Ex d [ia] IIC T6-T1 Ga/Gb, DIP A20/21 [ia D] TA, Txx°C IP6X

1) The marking of certificates not mentioned in this table are not affected by the FHX50.

3 Product description

3.1 Product design

3.1.1 Micropilot FMR53

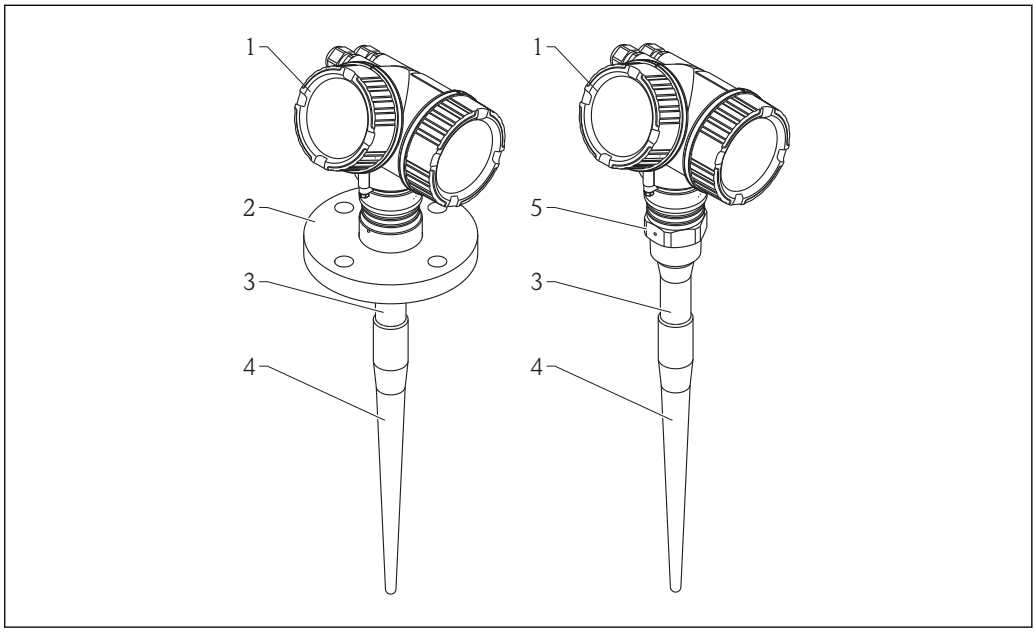

1 Design of the Micropilot FMR53 (6 GHz)

1 Electronics housing
2 Flange
3 Inactive length
4 Active part of the antenna
5 Process connection (Thread)

3.1.2 Micropilot FMR54

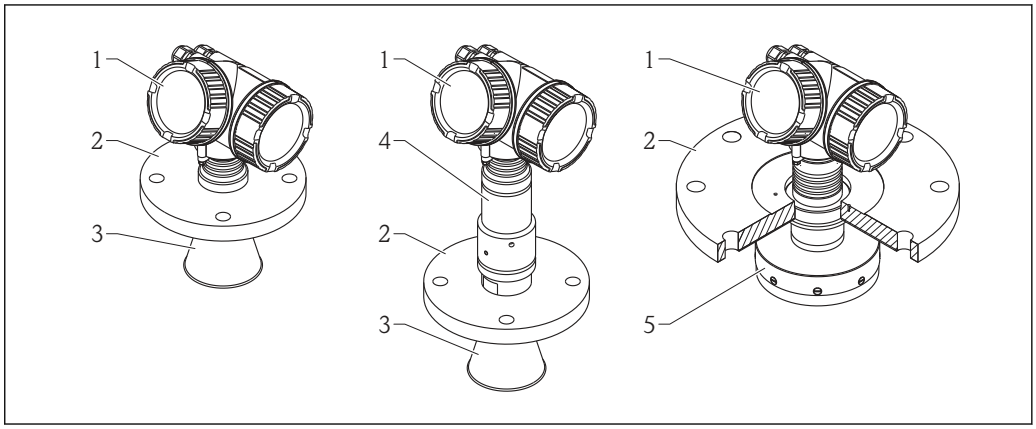

2 Design of the Micropilot FMR54 (6 GHz)

1 Electronics housing
2 Flange
3 Horn antenna
4 High temperature antenna fitting
5 Planar antenna

3.1.3 Electronics housing

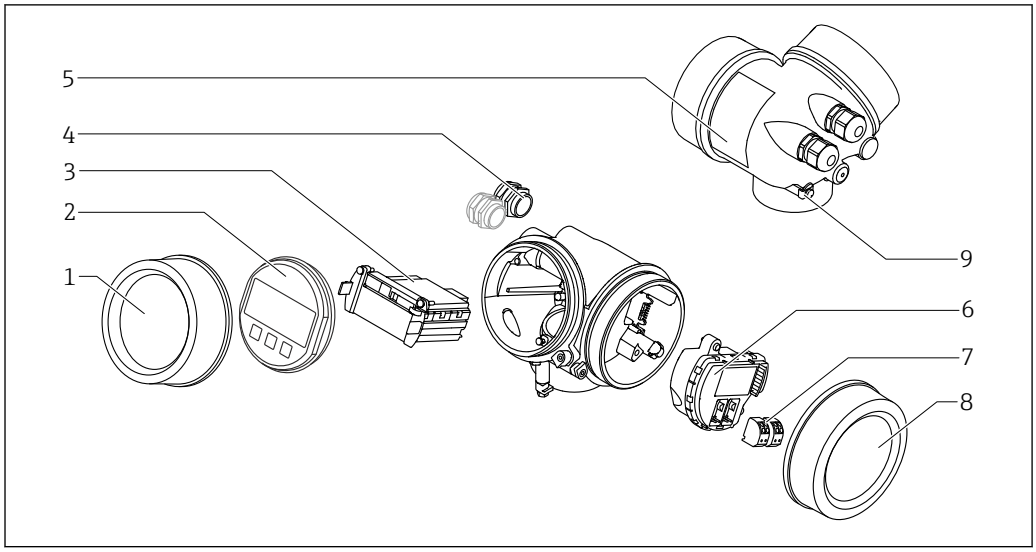

3 Design of the electronics housing

1 Electronics compartment cover
2 Display module
3 Main electronics module
4 Cable glands (1 or 2, depending on instrument version)
5 Nameplate
6 I/O electronics module
7 Terminals (pluggable spring terminals)
8 Connection compartment cover
9 Grounding terminal

4 Incoming acceptance and product identification

4.1 Incoming acceptance

Upon receipt of the goods check the following:
- Are the order codes on the delivery note and the product sticker identical?
- Are the goods undamaged?
- Do the nameplate data match the ordering information on the delivery note?
- Is the DVD with the operating tool present?
  If required (see nameplate): Are the Safety Instructions (XA) present?

If one of these conditions is not satisfied, contact your Endress+Hauser Sales Center.

4.2 Product identification

The following options are available for identification of the measuring device:
- Nameplate specifications
- Extended order code with breakdown of the device features on the delivery note
- Enter serial numbers from nameplates in *W@M Device Viewer* (www.endress.com/deviceviewer): All information about the measuring device is displayed.
- Enter the serial number from the nameplates into the *Endress+Hauser Operations App* or scan the 2-D matrix code (QR code) on the nameplate with the *Endress+Hauser Operations App*: all the information for the measuring device is displayed.

For an overview of the scope of the associated Technical Documentation, refer to the following:
- The *W@M Device Viewer*: Enter the serial number from the nameplate (www.endress.com/deviceviewer)
- The *Endress+Hauser Operations App*: Enter the serial number from the nameplate or scan the 2-D matrix code (QR code) on the nameplate.

4.2.1 Nameplate

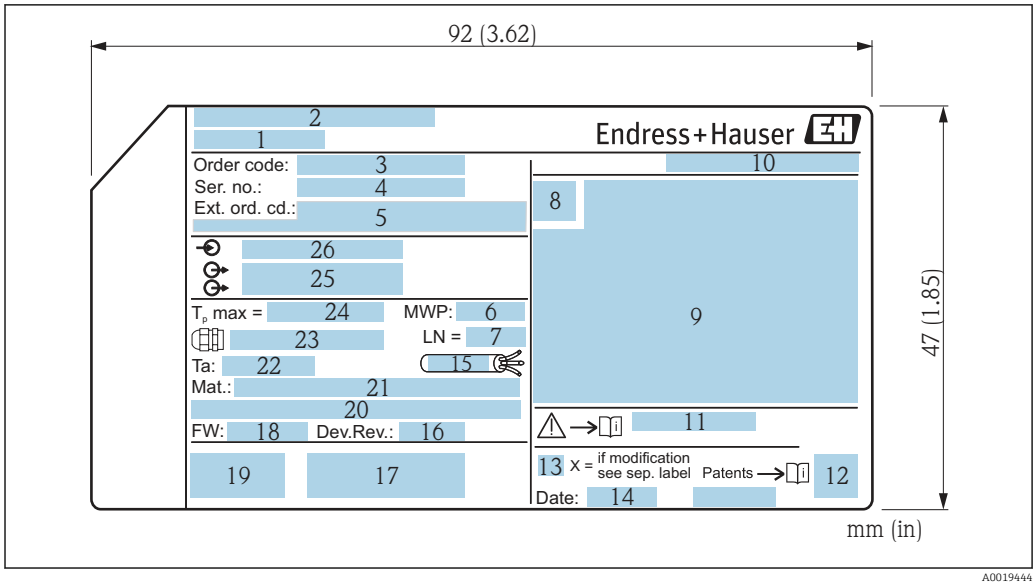

4 *Nameplate of the Micropilot*

1 *Device name*
2 *Address of manufacturer*
3 *Order code*
4 *Serial number (Ser. no.)*
5 *Extended order code (Ext. ord. cd.)*
6 *Process pressure*
7 *Antenna length (only for FMR51 with antenna extension)*
8 *Certificate symbol*
9 *Certificate and approval relevant data*
10 *Degree of protection: e.g. IP, NEMA*
11 *Document number of the Safety Instructions: e.g. XA, ZD, ZE*
12 *Data Matrix Code*
13 *Modification mark*
14 *Manufacturing date: year-month*
15 *Temperature resistance of the cable*
16 *Device revision*
17 *Additional information about the device version (certificates, approvals, communication): e.g. SIL, PROFIBUS*
18 *Firmware version (FW)*
19 *CE mark, C-Tick*
20 *Profibus PA: Profil-Version; FOUNDATION Fieldbus: Device ID*
21 *Material in contact with process*
22 *Permitted ambient temperature (T_a)*
23 *Size of the thread of the cable glands*
24 *Maximum process temperature*
25 *Signal outputs*
26 *Operating voltage*

Only 33 digits of the extended order code can be indicated on the nameplate. If the extended order code exceeds 33 digits, the rest will not be shown. However, the complete extended order code can be viewed in the operating menu of the device: **Extended order code 1 to 3** parameter

5 Storage, Transport

5.1 Storage conditions

- Permitted storage temperature: −40 to +80 °C (−40 to +176 °F)
- Use the original packaging.

5.2 Transport product to the measuring point

NOTICE

Housing or antenna horn may be damaged or break away.

Risk of injury!

- ▶ Transport the measuring device to the measuring point in its original packaging or at the process connection.
- ▶ Do not fasten lifting devices (hoisting slings, lifting eyes etc.) at the housing or the antenna horn but at the process connection. Take into account the mass center of the device in order to avoid unintended tilting.
- ▶ Comply with the safety instructions, transport conditions for devices over 18kg (39.6lbs) (IEC61010).

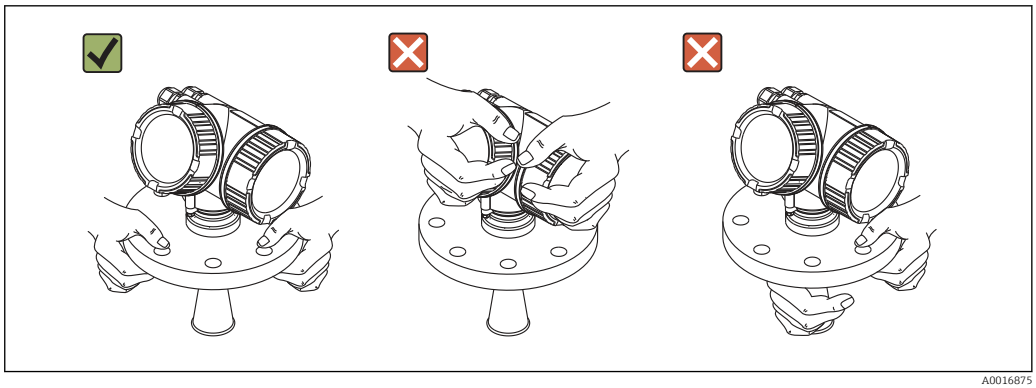

A0016875

6 Installation

6.1 Installation conditions

6.1.1 Mounting position

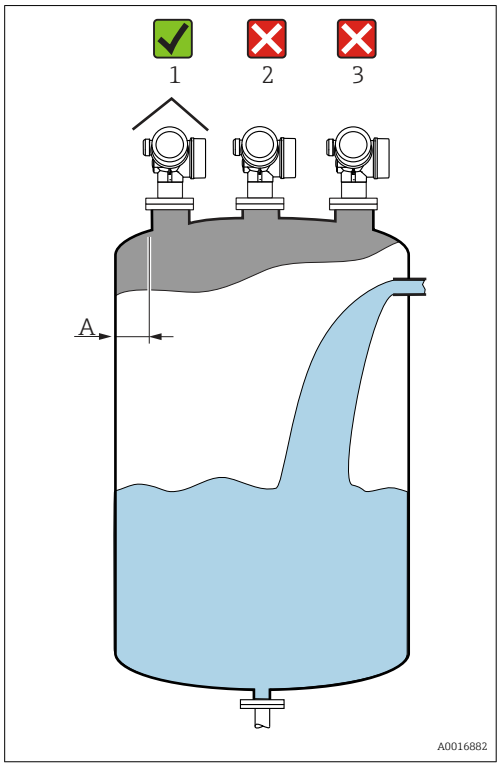

- Recommended distance **A** from wall to outer edge of nozzle: ~ 1/6 of tank diameter.
  Nevertheless the device should not be installed closer than 30 cm (11.8 in) to the tank wall.
- Not in the center (2), as interference can cause signal loss.
- Not above the fill stream (3).
- It is recommended to us a weather protection cover (1) in order to protect the device from direct sun or rain.

6.1.2 Vessel installations

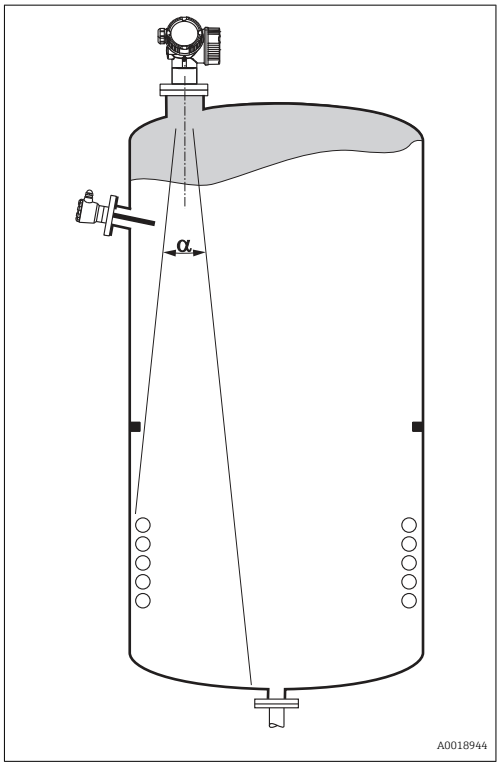

Avoid any installations (point level switches, temperature sensors, braces, vacuum rings, heating coils, baffles etc.) inside the signal beam. Take into account the beam angle → 23.

6.1.3 Reduction of interference echoes

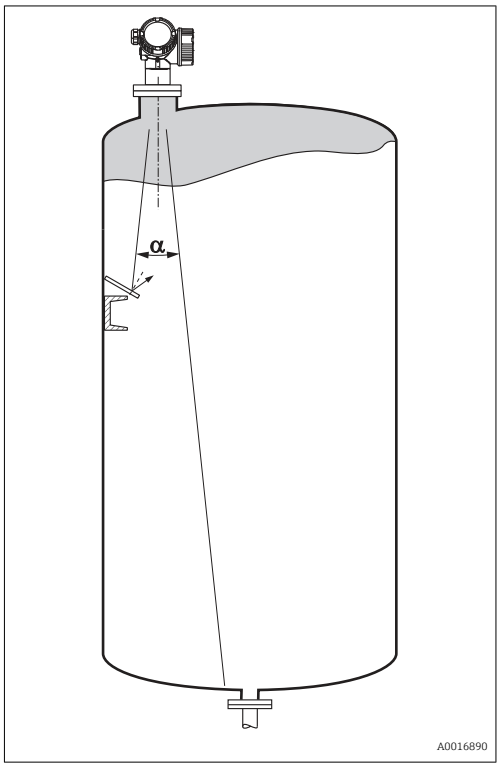

Metallic screens mounted at a slope spread the radar signal and can, therefore, reduce interference echoes.

6.1.4 Measurement in a plastic vessel

If the outer wall of the vessel is made of a non-conductive material (e.g. GRP), microwaves can also be reflected off interfering installations outside the vessel (e.g. metallic pipes (1), ladders (2), grates (3), ...). Therefore, there should be no such interfering installations in the signal beam. Please contact Endress+Hauser for further information.

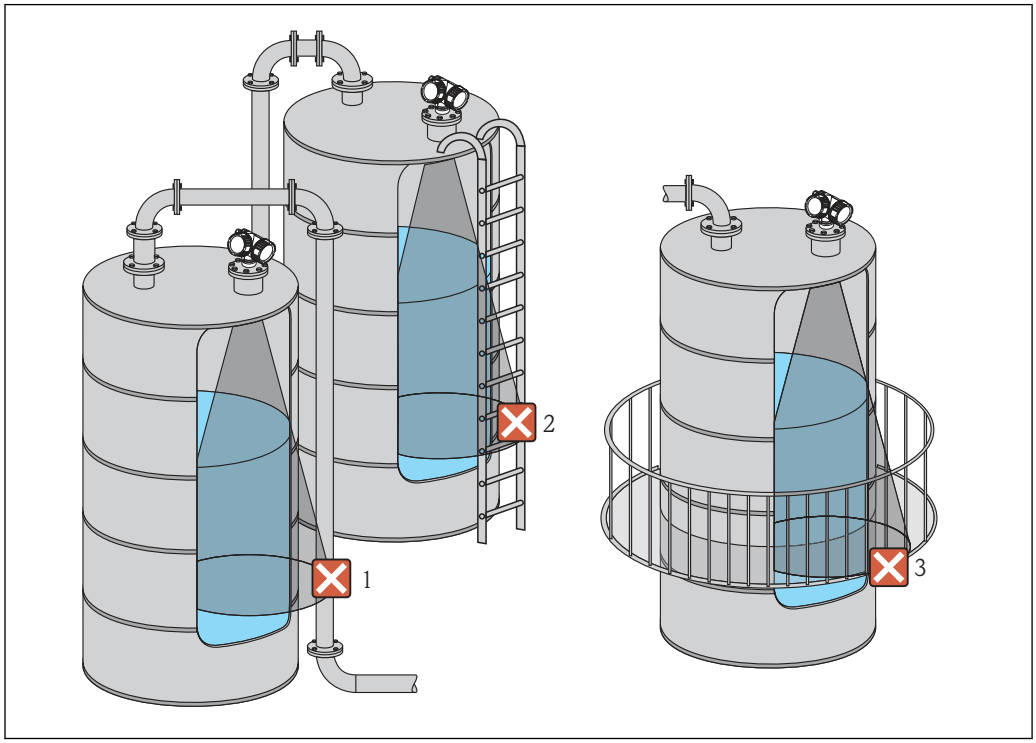

6.1.5 Optimization options

- Antenna size
  The bigger the antenna, the smaller the beam angle α and the fewer interference echoes → 🖹 23.
- Mapping
  The measurement can be optimized by means of electronic suppression of interference echoes.
  See the **Confirm distance** parameter (→ 🖹 127) for details.
- Antenna alignment
  Take into account the marker on the flange or threaded connection .
- Stilling well
  A stilling well can be applied to avoid interferences → 🖹 29.
- Metallic screens mounted at a slope
  They spread the radar signals and can, therefore, reduce interference echoes.

6.1.6 Beam angle

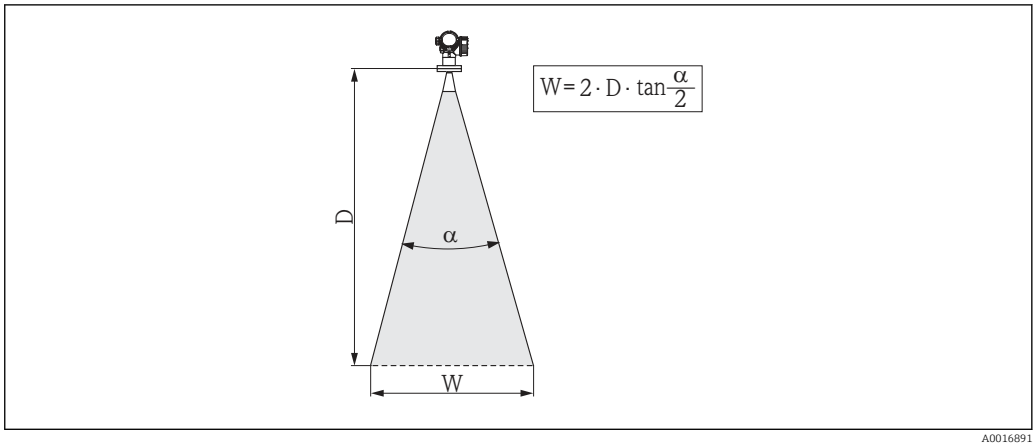

5 Relationship between beam angle α, distance D and beamwidth diameter W

The beam angle is defined as the angle α where the energy density of the radar waves reaches half the value of the maximum energy density (3-dB-width). Microwaves are also emitted outside the signal beam and can be reflected off interfering installations.

Beam diameter **W** as a function of beam angle **α** and measuring distance **D**:

FMR53	
Beam angle α	23°
Measuring distance (D)	**Beamwidth diameter W**
3 m (9.8 ft)	1.22 m (4 ft)
6 m (20 ft)	2.44 m (8 ft)
9 m (30 ft)	3.66 m (12 ft)
12 m (39 ft)	4.88 m (16 ft)
15 m (49 ft)	6.1 m (20 ft)
20 m (66 ft)	8.14 m (27 ft)

FMR54 - Horn antenna			
Antenna size	150 mm (6 in)	200 mm (8 in)	250 mm (10 in)
Beam angle α	23°	19°	15°
Distance (D)	**Beamwidth diameter W**		
3 m (9.8 ft)	1.22 m (4 ft)	1 m (3.3 ft)	0.79 m (2.6 ft)
6 m (20 ft)	2.44 m (8 ft)	2.01 m (6.6 ft)	1.58 m (5.2 ft)
9 m (30 ft)	3.66 m (12 ft)	3.01 m (9.9 ft)	2.37 m (7.8 ft)
12 m (39 ft)	4.88 m (16 ft)	4.02 m (13 ft)	3.16 m (10 ft)
15 m (49 ft)	6.1 m (20 ft)	5.02 m (16 ft)	3.95 m (13 ft)
20 m (66 ft)	8.14 m (27 ft)	6.69 m (22 ft)	5.27 m (17 ft)

6.2 Measuring conditions

- In case of **boiling surfaces**, **bubbling** or tendency for **foaming** use FMR53 or FMR54. Depending on its consistence, foam can either absorb microwaves or reflect them off the foam surface. Measurement is possible under certain conditions. For FMR50, FMR51 and FMR52, the additional option "Advanced dynamics" is recommended in these cases (feature 540: "Application Package", option EM).
- In case of heavy **steam development** or **condensate**, the maximum measuring range of FMR50, FMR51 and FMR52 may decrease depending on density, temperature and composition of the steam → use FMR53 or FMR54.
- For the measurement of absorbing gases such as **ammonia NH_3** or some **fluorocarbons** [2], please use Levelflex or Micropilot FMR54 in a stilling well.
- The measuring range begins, where the beam hits the tank bottom. Particularly with dish bottoms or conical outlets the level cannot be detected below this point.
- In stilling well applications, the electromagnetic waves do not propagate completely outside the tube. It must be taken into account that the accuracy may be reduced in the area **C**. In order to guarantee the required accuracy in these cases, it is recommended to position the zero-point at a distance **C** above the end of the tube (see figure).
- In case of media with a low dielectric constant (ε_r = 1.5 to 4) [3] the tank bottom can be visible through the medium at low levels (low height **C**). Reduced accuracy has to be expected in this range. If this is not acceptable, we recommend positioning the zero point at a distance **C** (see figure) above the tank bottom in these applications.
- In principle it is possible to measure up to the tip of the antenna with FMR51, FMR53 and FMR54. However, due to considerations regarding corrosion and build-up, the end of the measuring range should not be chosen any closer than **A** (see figure) to the tip of the antenna.
- When using FMR54 with planar antenna, especially for media with low dielectric constants, the end of the measuring range should not be closer than **A: 1 m (3.28 ft)** to the flange.
- The smallest possible measuring range **B** depends on the antenna version (see figure).
- The tank height should be at least **H** (see table).

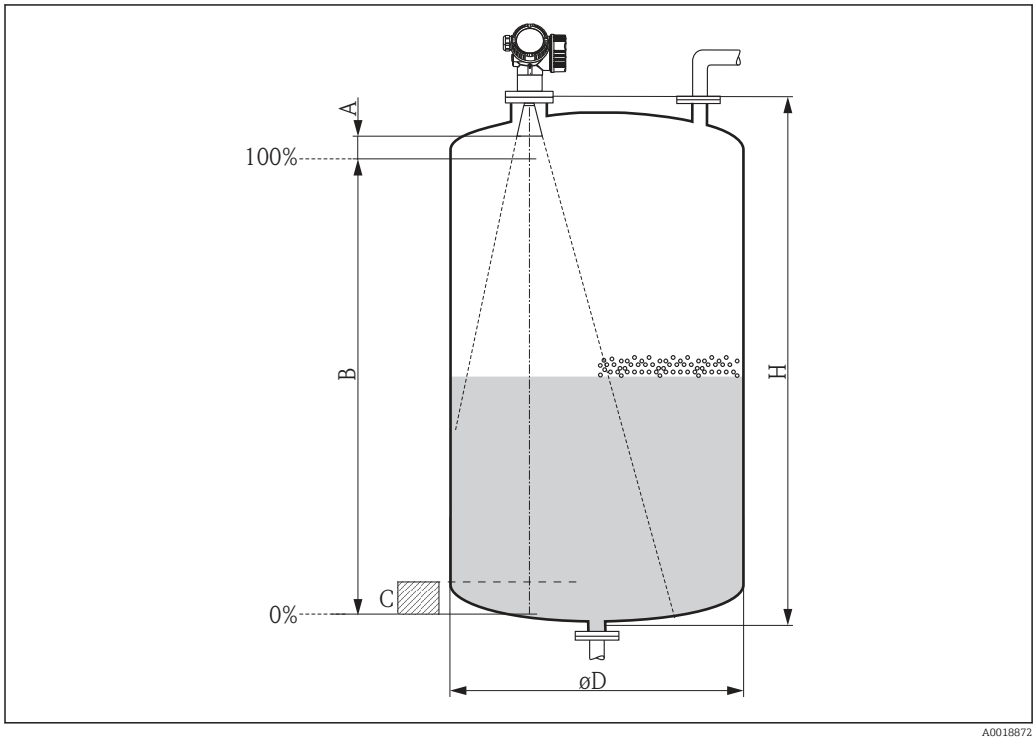

A0018872

2) Affected compounds are e.g. R134a, R227, Dymel 152a.

3) Dielectric constants of important media commonly used in various industries are summarized in the DC manual (CP01076F) and in the Endress +Hauser "DC Values App" (available for Android and iOS).

Device	A	B	C	H
FMR53	50 mm (1.97 in)	> 0.5 m (1.6 ft)	150 to 300 mm (5.91 to 11.8 in)	> 1.5 m (4.9 ft)
FMR54 - horn antenna	50 mm (1.97 in)			
FMR54 - planar antenna	1 m (3.28 ft)			

6.3 Mounting cladded flanges

For cladded flanges of FMR53, observe the following:
- Use flange screws according to the number of flange holes.
- Tighten the screws with the required torque (see table).
- Retighten the screws after 24 hours or after the first temperature cycle.
- Depending on process pressure and process temperature check and retighten the screws at regular intervals.

Usually, the PTFE flange cladding also serves as a seal between the nozzle and the device flange.

Flange size	Number of screws	Recommended torque [Nm]	
		minimum	maximum
EN			
DN50/PN16	4	45	65
DN80/PN16	8	40	55
DN100/PN16	8	40	60
DN150/PN16	8	75	115
ASME			
2"/150lbs	4	40	55
3"/150lbs	4	65	95
4"/150lbs	8	45	70
6"/150lbs	8	85	125
JIS			
10K 50A	4	40	60
10K 80A	8	25	35
10K 100A	8	35	55
10K 100A	8	75	115

6.4 Installation in vessel (free space)

6.4.1 Rod antenna (FMR53)

Alignment

- Align the antenna vertically to the product surface.
- A marking at the flange (somwhere between the flange holes) or the boss enables alignment of the antenna. This marking must be aligned towards the tank wall as well as possible.

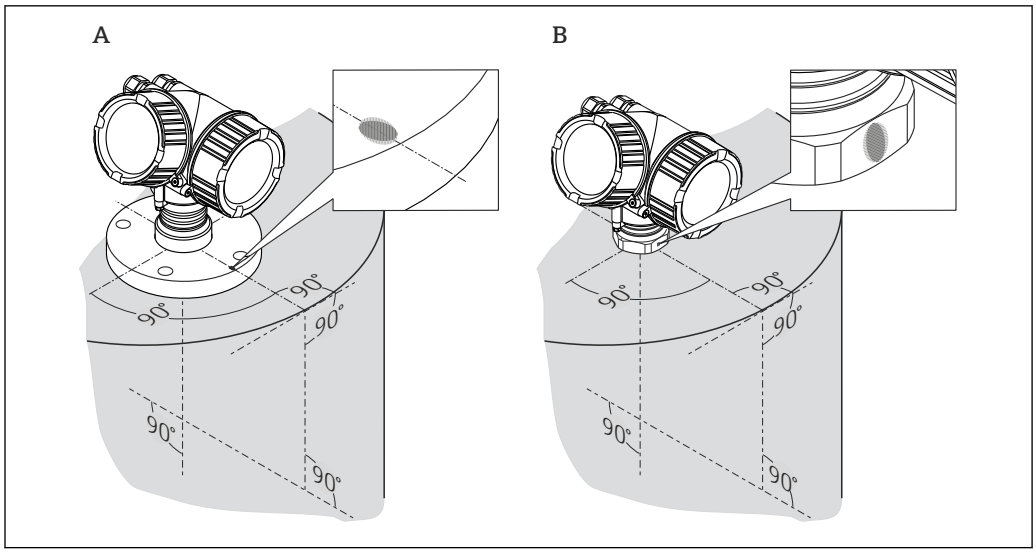

A0018974

Depending on the device version the marking may be a circle or two short parallel lines.

Nozzle mounting

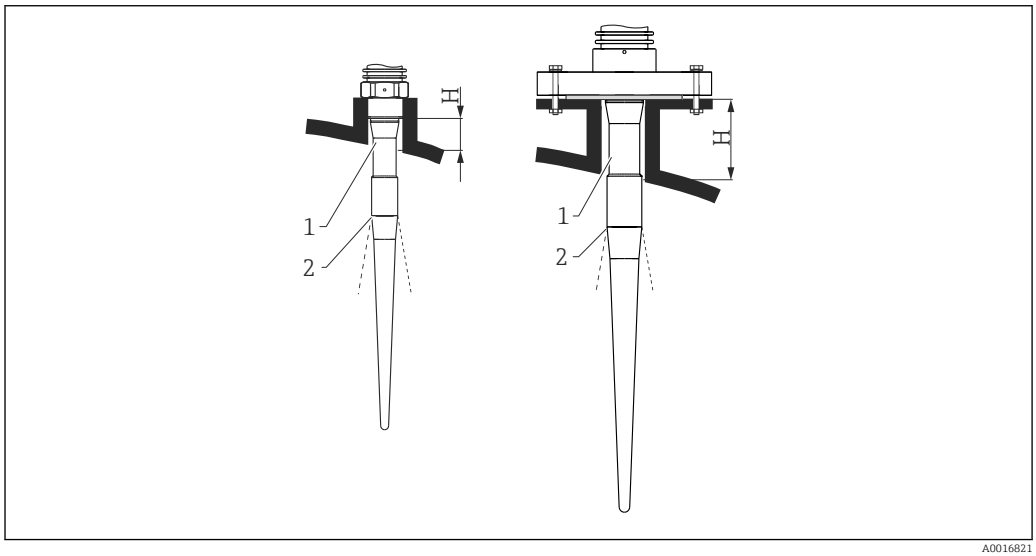

A0016821

6 *Nozzle height an diameter for the rod antenna (FMR53)*

1 Inactive lengthof the antenna
2 Beam launched here

Antenna length	390 mm (15.4 in)	540 mm (21.3 in)
Nozzle height H	< 100 mm (3.94 in)	< 250 mm (9.84 in)

The inactive part (1) of the rod antenna must extend below the nozzle.

- For flanges with PTFE cladding: Observe the notes on the mounting of cladded flanges → 25.
- Usually, the PTFE flange cladding also serves as a seal between the nozzle and the device flange.

Threaded connection

- Tighten with the hexagonal nut only.
- Tool : 55 mm hexagonal wrench
- Maximum permissible torque:
  - Thread PVDF: 35 Nm (26 lbf ft)
  - Thread 316L: 60 Nm (44 lbf ft)

6.4.2 Horn antenna (FMR54)

Alignment

- Align the antenna vertically to the product surface.
- A marking at the flange (somwhere between the flange holes) enables alignment of the antenna. This marking must be aligned towards the tank wall as well as possible.

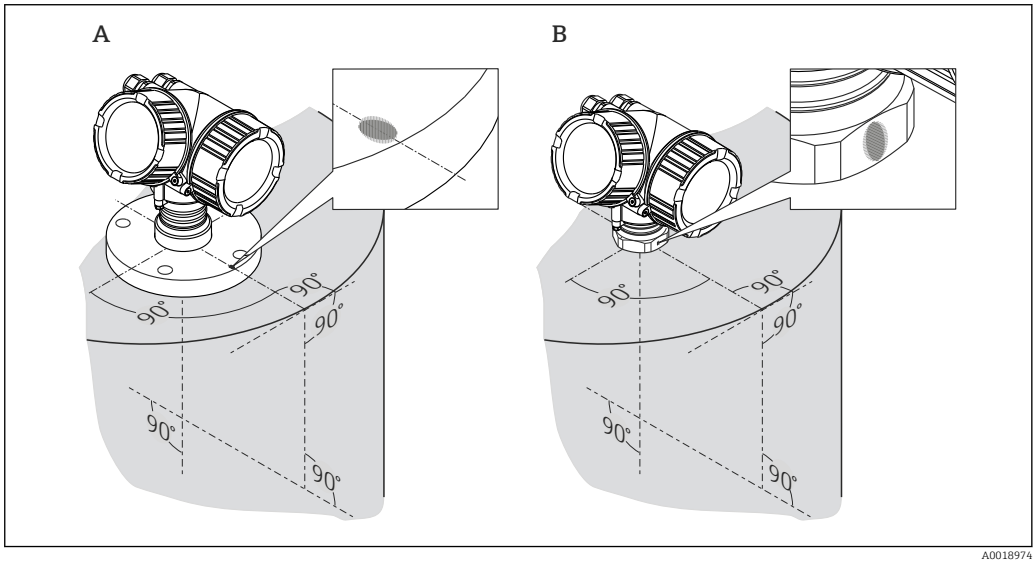

A0018974

Depending on the device version the marking may be a circle or two short parallel lines.

Nozzle mounting

The horn antenna must extend below the nozzle; if necessary select the device version with antenna extension 100 to 400 mm (4 to 16 in) [4].

4) See product structure: feature 610 "Accessory Mounted", options OM, ON, OR, OS.

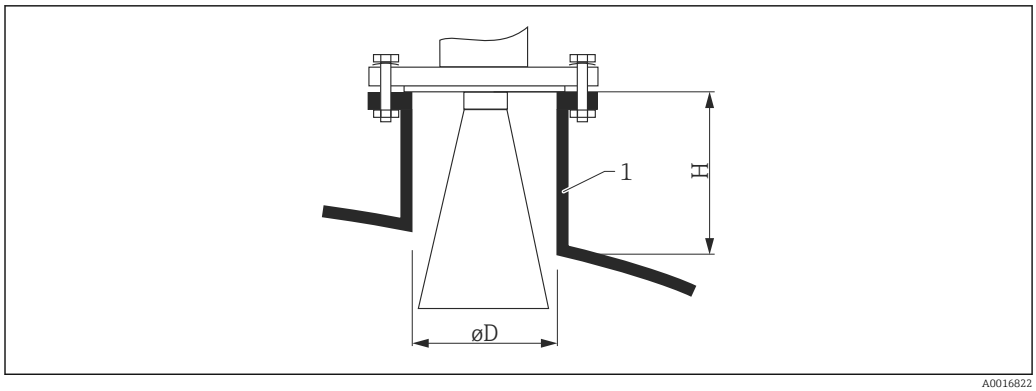

7 Nozzle height and diameter for the horn antenna (FMR54)

1 Mounting nozzle

Antenna [1]	Nozzle diameter *D*	Maximum nozzle height H_{max} [2]
BE: 150mm/6"	146 mm (5.75 in)	185 mm (7.28 in)
BF: 200mm/8"	191 mm (7.52 in)	268 mm (10.6 in)
BG: 250mm/10"	241 mm (9.49 in)	360 mm (14.2 in)

1) Feature 070 of the product structure; the antenna versions BC (Horn 80mm/3") and BD (Horn 100mm/4") should not be mounted directly into the tank. They are only suited for bypass and stilling well applications.
2) valid for antennas without antenna extension

Measurement from the outside through plastic walls

- Dielectric constant of the medium: $\varepsilon_r > 10$
- If possible use the 250 mm (10 in) antenna.
- The distance between the lower edge of the antenna and the tank should be about 100 mm (4 in).
- If possible, avoid mounting location where condensation or build-up might occur.
- In case of outdoor mounting, the space between antenna and vessel has to be protected from the elements.
- Do not mount any potential reflectors (e.g. pipes) outside the tank in the signal beam.

Suitable thickness of the tank ceiling

Penetrated material	PE	PTFE	PP	Plexiglas
DK / ε_r	2.3	2.1	2.3	3.1
Optimum thickness	16 mm (0.65 in)	17 mm (0.68 in)	16 mm (0.65 in)	14 mm (0.56 in)

6.4.3 Planar antenna (FMR54)

The planar antenna is only suited for stilling well applications . It can not be used for free space applications.

6.5 Installation in stilling well

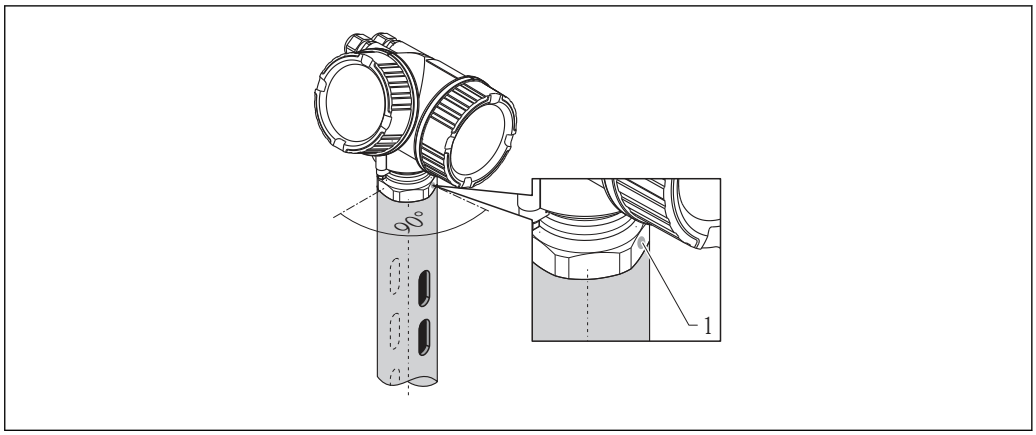

8 *Installation in stilling well*

1 *Marking for antenna alignment*

- For horn antenna: Align the marking towards the slots of the stilling well.
- No alignment is required for planar antennas.
- Measurements can be performed through an open full bore ball valve without any problems.
- After mounting, the housing can be turned 350° in order to facilitate access to the display and the terminal compartment → 33.

6.5.1 Recommendations for the stilling well

- Metal (no enamel coating; plastic on request).
- Constant diameter.
- Diameter of stilling well not larger than antenna diameter.
- Diameter difference between horn antenna and inner diameter of the stilling well as small as possible.
- Weld seam as smooth as possible and on the same axis as the slots.
- Slots offset 180° (not 90°).
- Slot width or diameter of holes max. 1/10 of pipe diameter, de-burred. Length and number do not have any influence on the measurement.
- Select horn antenna as big as possible. For intermedaite sizes (e.g. 180 mm (7 in)) select next larger antenna and adapt it mechanically (for horn antennas)
- At any transition (i.e. when using a ball valve or mending pipe segments), no gap may be left exceeding 1 mm (0.04 in).
- The stilling well must be smooth on the inside (average roughness $R_z \leq$ 6.3 µm (248 µin)). Use extruded or parallel welded metal pipe. An extension of the pipe is possible with welded flanges or pipe sleeves. Flange and pipe have to be properly aligned at the inside.
- Do not weld through the pipe wall. The inside of the stilling well must remain smooth. In case of unintentional welding through the pipe, the weld seam and any unevenness on the inside need to be carefully removed and smoothened. Otherwise, strong interference echoes will be generated and material build-up will be promoted.
- In the case of smaller nominal widths flanges must be welded to the pipe such that they allow for a correct orientation (marker aligned toward slots).

The performance of Micropilot FMR54 with planar antenna is not dependent on the alignment or geometry of standard stilling wells. No special alignment is required. However, make sure that the planar antenna is installed vertically relative to the stilling well axis.

6.5.2 Examples for the construction of stilling wells

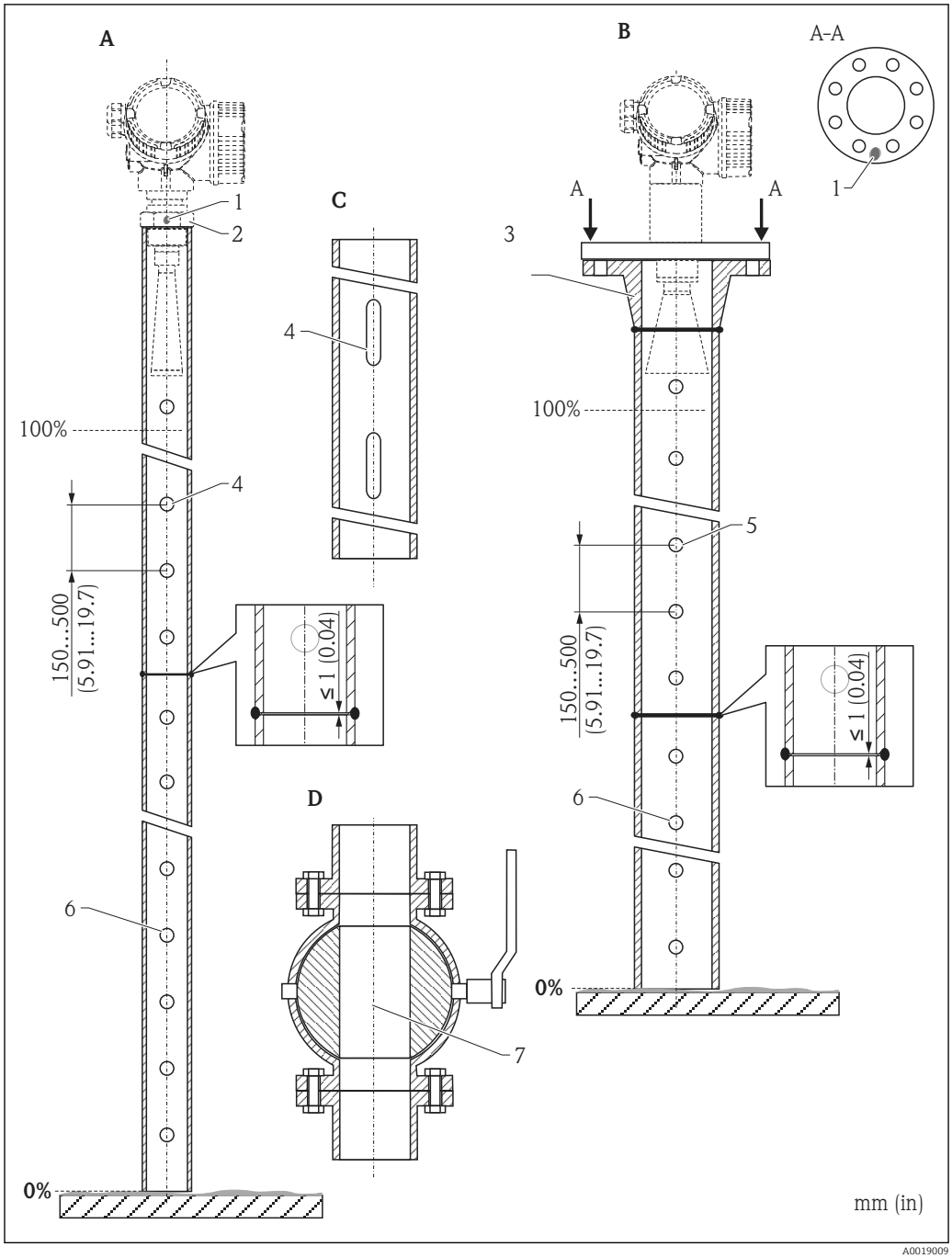

A Micropilot FMR50/FMR51: Horn 40mm(1½")
B Micropilot FMR50/FMR51/FMR52/FMR54: Horn 80mm(3")
C Stilling well with slots
D Full bore ball valve
1 Marking for axial alignment
2 Threaded connection
3 e.g. welding neck flange DIN2633
4 Φ hole max. 1/10 Φ stilling well
5 Φ hole max. 1/10 Φ stilling well; single sided or drilled through
6 Inside of holes deburred
7 Diameter of opening of ball valve must always be equivalent to pipe diameter; avoid edges and constrictions.

6.6 Installation in bypass

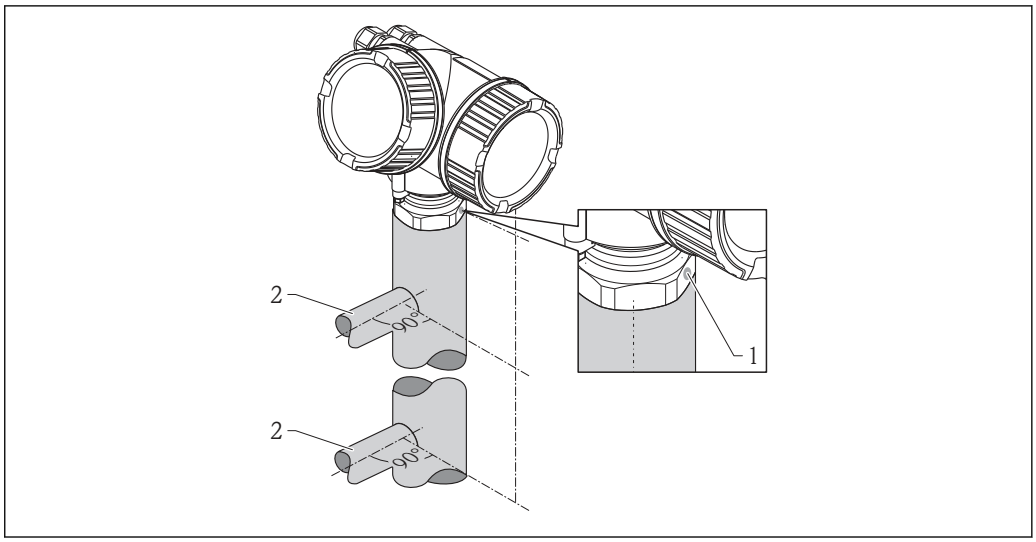

9 *Installation in bypass*

1 Marking for antenna alignment
2 Tank connectors

- Align the marker perpendicular (90°) to the tank connectors.
- Measurements can be performed through an open full bore ball valve without any problems.
- After mounting, the housing can be turned 350° in order to facilitate access to the display and the terminal compartment → 33.

6.6.1 Recommendations for the bypass pipe

- Metal (no plastic or enamel coating).
- Constant diameter.
- Select horn antenna as big as possible. For intermediate sizes (e.g. 95 mm (3.5 in)) select next larger antenna and adapt it mechanically (for horn antennas).
- Diameter difference between horn antenna and inner diameter of the bypass as small as possible.
- At any transition (i.e. when using a ball valve or mending pipe segments), no gap may be created exceeding 1 mm (0.04 in).
- In the area of the tank connections (~ ±20 cm (7.87 in)) a reduced accuracy of the measurement has to be expected.

6.6.2 Example for the construction of a bypass

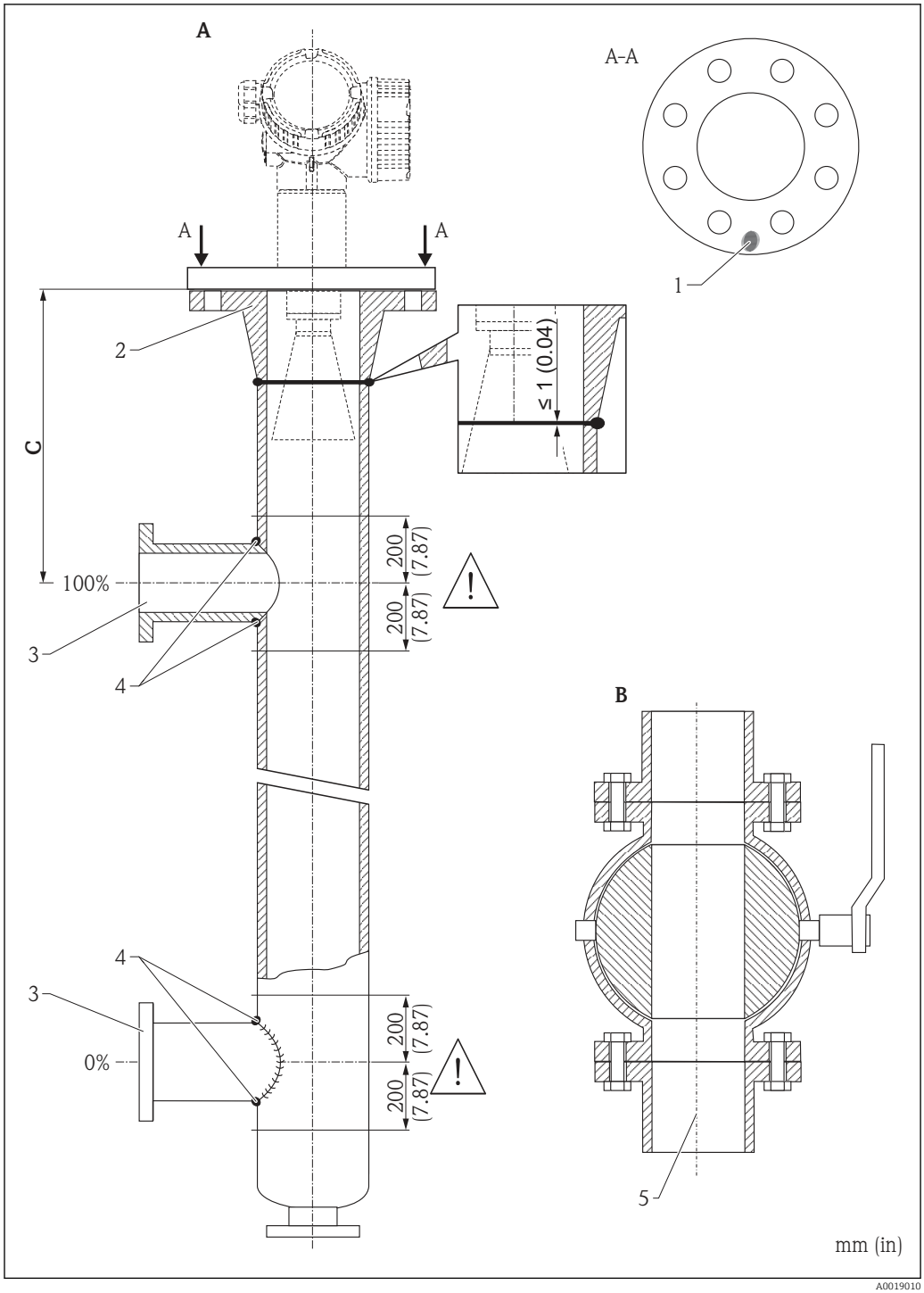

A Micropilot FMR50/FMR51/FMR52/FMR54: Horn 80mm(3")
B Full bore ball valve
C Minimum distance to upper connection pipe: 400 mm (15,7 in)
1 Marking for axial alignment
2 e.g. welding neck flange DIN2633
3 Diameter of the connection pipes as small as possible
4 Do not weld through the pipe wall; the inside of the bypass must remain smooth.
5 Diameter of opening of ball valve must always be equivalent to pipe diameter. Avoid edges and constrictions.

6.7 Container with heat insulation

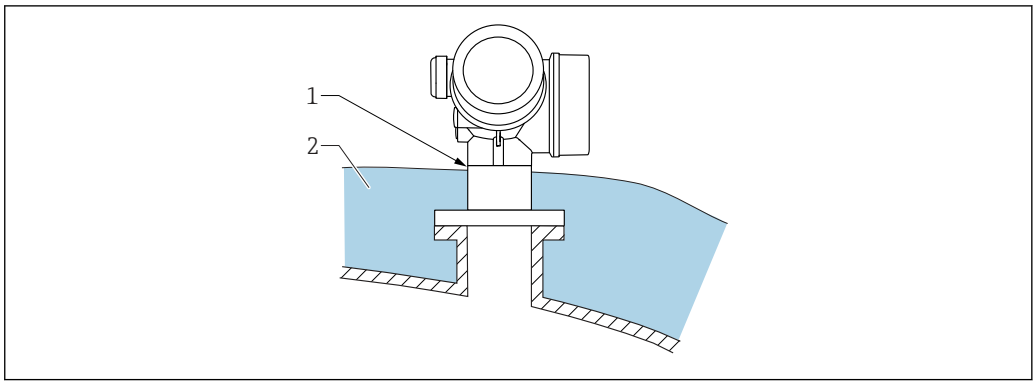

A0032207

If process temperatures are high, the device should be included in the usual container insulation system (2) to prevent the electronics from heating as a result of thermal radiation or convection. The insulation should not be higher than the neck of the device (1).

6.8 Turning the transmitter housing

To provide easier access to the connection compartment or display module, the transmitter housing can be turned:

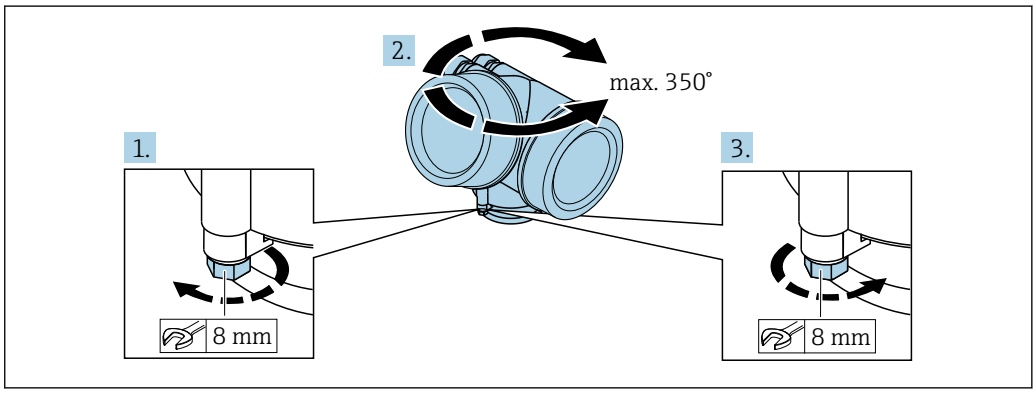

A0032242

1. Unscrew the securing screw using an open-ended wrench.
2. Rotate the housing in the desired direction.
3. Tighten the securing screw (1.5 Nm for plastic housing; 2.5 Nm for aluminum or stainless steel housing).

6.9 Turning the display

6.9.1 Opening cover

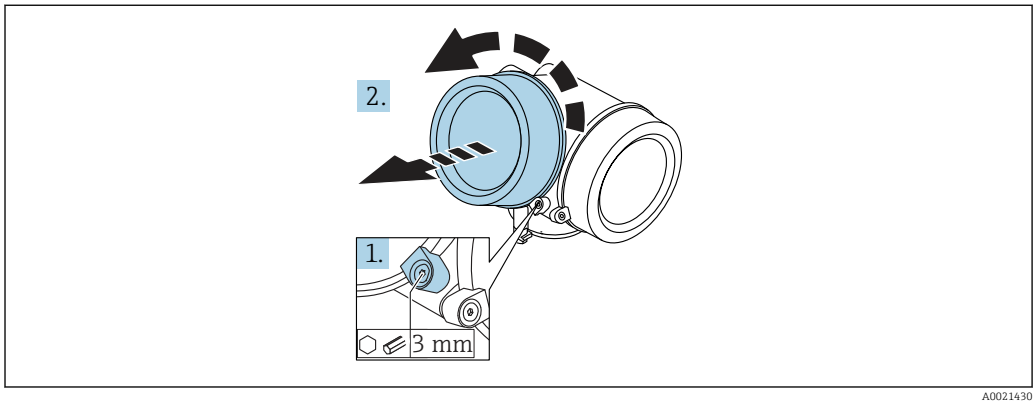

A0021430

1. Loosen the screw of the securing clamp of the electronics compartment cover using an Allen key (3 mm) and turn the clamp 90 ° counterclockwise.
2. Unscrew cover and check lid gasket, replace if necessary.

6.9.2 Turning the display module

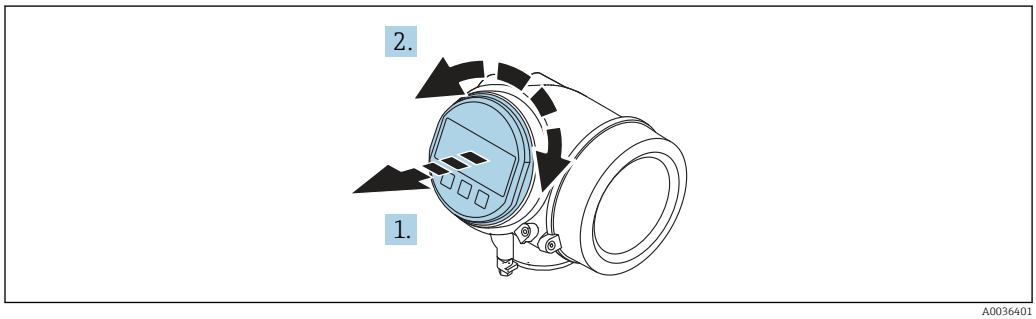

A0036401

1. Pull out the display module with a gentle rotational movement.
2. Rotate the display module to the desired position: max. 8 × 45 ° in each direction.
3. Feed the coiled cable into the gap between the housing and main electronics module and plug the display module into the electronics compartment until it engages.

6.9.3 Closing electronics compartment cover

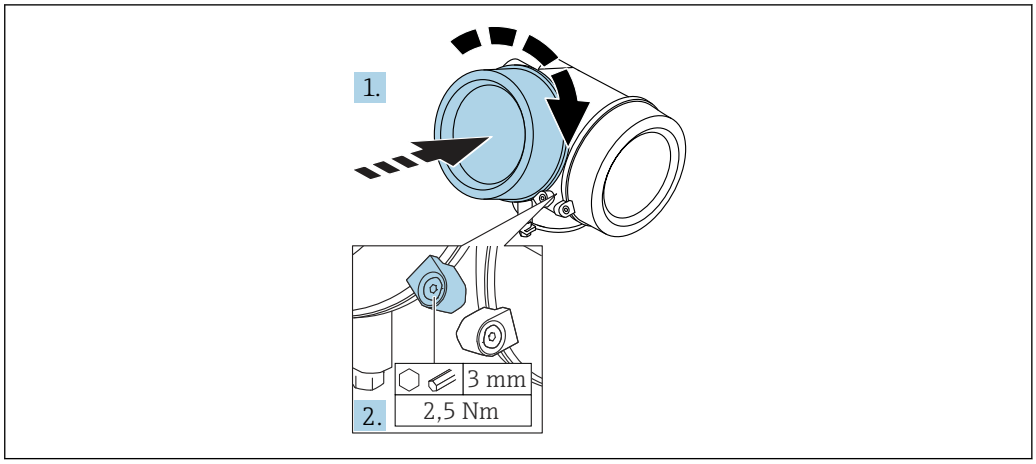

A0021451

1. Screw back firmly electronics compartment cover.
2. Turning securing clamp 90 ° clockwise and tighten the clamp with 2.5 Nm using the Allen key (3 mm).

6.10 Post-installation check

❑	Is the device undamaged (visual inspection)?
❑	Does the device conform to the measuring point specifications? For example: ▪ Process temperature ▪ Process pressure (refer to the chapter on "Material load curves" of the "Technical Information" document) ▪ Ambient temperature range ▪ Measuring range
❑	Are the measuring point identification and labeling correct (visual inspection)?
❑	Is the device adequately protected from precipitation and direct sunlight?
❑	Are the securing screw and securing clamp tightened securely?

7 Electrical connection

7.1 Connection conditions

7.1.1 Terminal assignment

Terminal assignment 2-wire: 4-20 mA HART

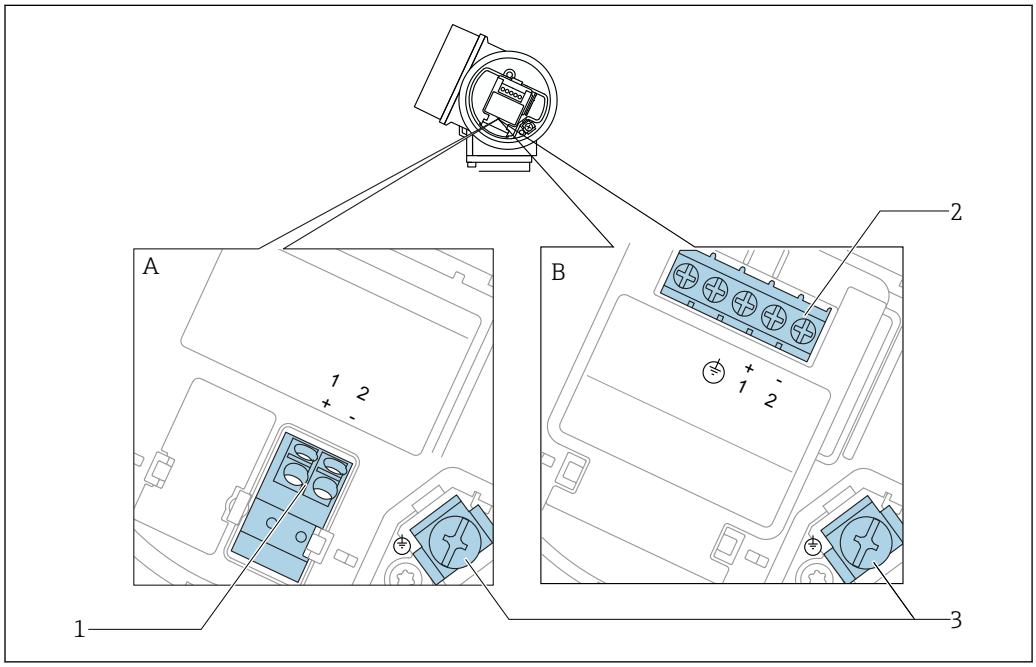

10 *Terminal assignment 2-wire: 4-20 mA HART*

A Without integrated overvoltage protection
B With integrated overvoltage protection
1 Connection 4-20 mA HART passive: terminals 1 and 2, without integrated overvoltage protection
2 Connection 4-20 mA HART passive: terminals 1 and 2, with integrated overvoltage protection
3 Terminal for cable screen

Block diagram 2-wire: 4-20 mA HART

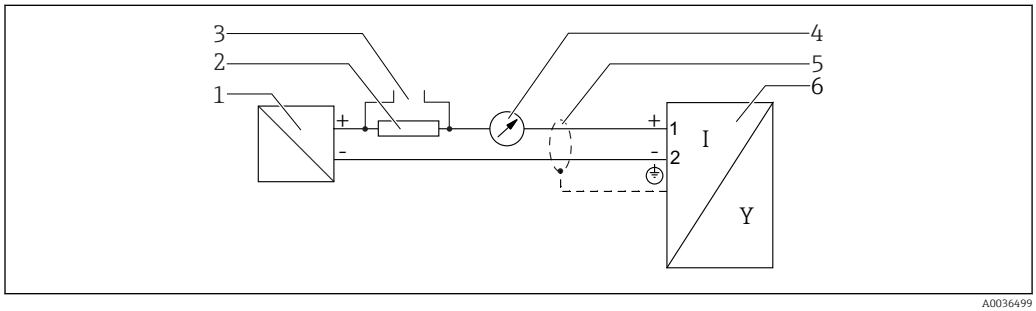

11 *Block diagram 2-wire: 4-20 mA HART*

1 Active barrier with power supply (e.g. RN221N); observe terminal voltage
2 HART communication resistor (≥ 250 Ω); observe maximum load
3 Connection for Commubox FXA195 or FieldXpert SFX350/SFX370 (via VIATOR Bluetooth modem)
4 Analog display device; observe maximum load
5 Cable screen; observe cable specification
6 Measuring device

Terminal assignment 2-wire: 4-20 mA HART, switch output

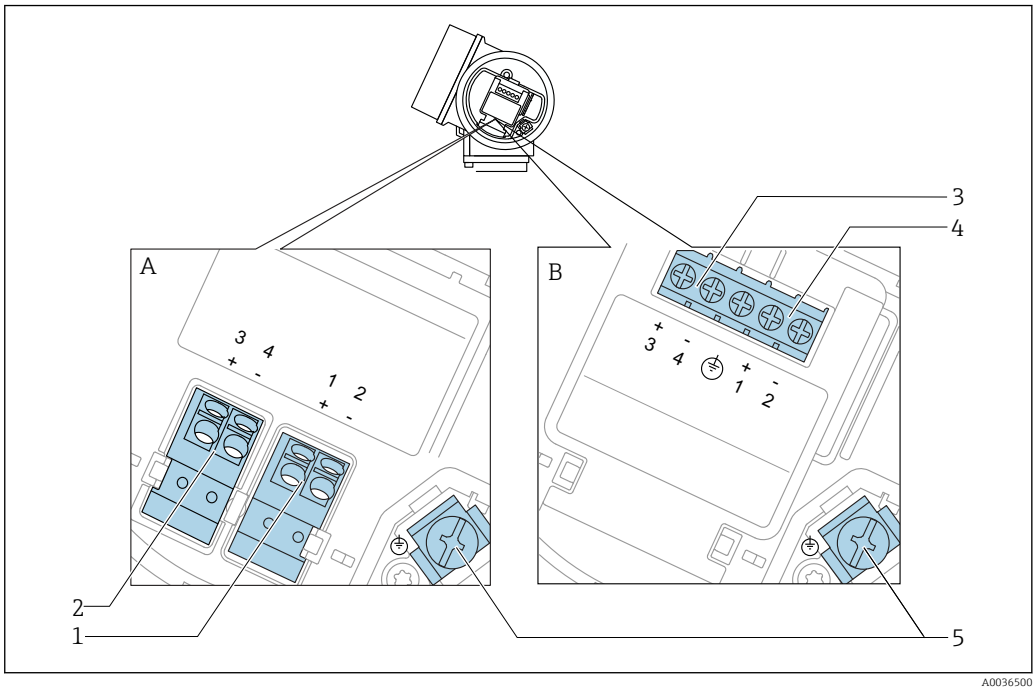

12 *Terminal assignment 2-wire: 4-20 mA HART, switch output*

A Without integrated overvoltage protection
B With integrated overvoltage protection
1 Connection 4-20 mA HART passive: terminals 1 and 2, without integrated overvoltage protection
2 Connection switch output (Open Collector): terminals 3 and 4, without integrated overvoltage protection
3 Connection switch output (Open Collector): terminals 3 and 4, with integrated overvoltage protection
4 Connection 4-20 mA HART passive: terminals 1 and 2, with integrated overvoltage protection
5 Terminal for cable screen

Block diagram 2-wire: 4-20 mA HART, switch output

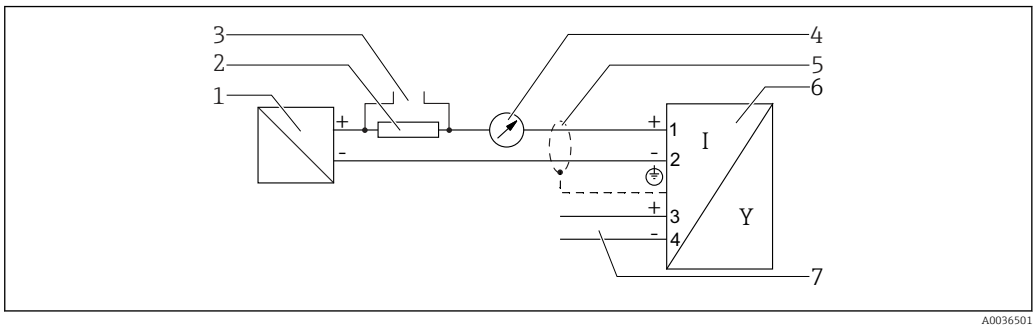

13 *Block diagram 2-wire: 4-20 mA HART, switch output*

1 Active barrier with power supply (e.g. RN221N); observe terminal voltage
2 HART communication resistor (≥ 250 Ω); observe maximum load
3 Connection for Commubox FXA195 or FieldXpert SFX350/SFX370 (via VIATOR Bluetooth modem)
4 Analog display device; observe maximum load
5 Cable screen; observe cable specification
6 Measuring device
7 Switch output (Open Collector)

Terminal assignment 2-wire: 4-20 mA HART, 4-20 mA

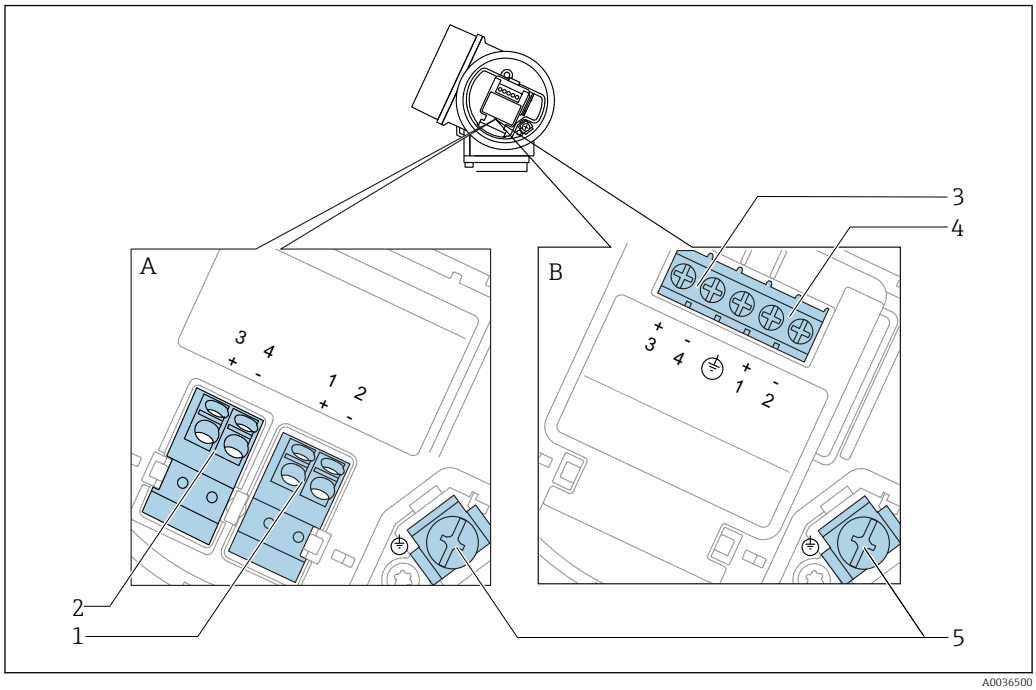

14 *Terminal assignment 2-wire: 4-20 mA HART, 4-20 mA*

A Without integrated overvoltage protection
B With integrated overvoltage protection
1 Connection current output 1, 4-20 mA HART passive: terminals 1 and 2, without integrated overvoltage protection
2 Connection current output 2, 4-20 mA: terminals 3 and 4, without integrated overvoltage protection
3 Connection current output 2, 4-20 mA: terminals 3 and 4, with integrated overvoltage protection
4 Connection current output 1, 4-20 mA HART passive: terminals 1 and 2, with integrated overvoltage protection
5 Terminal for cable screen

Block diagram 2-wire: 4-20 mA HART, 4-20 mA

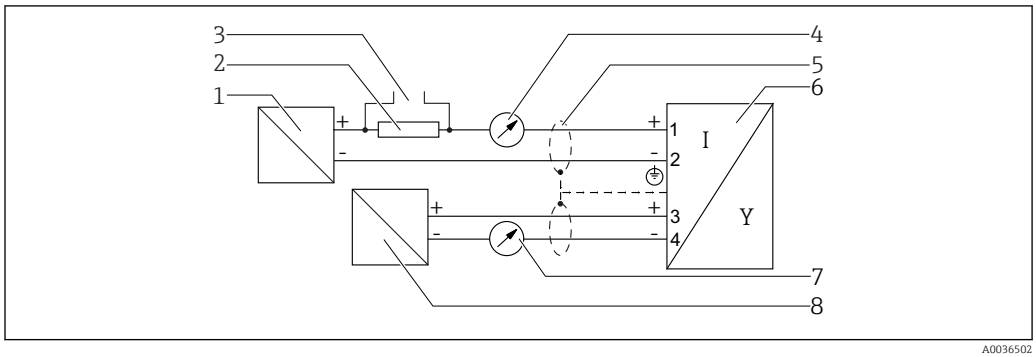

15 *Block diagram 2-wire: 4-20 mA HART, 4-20 mA*

1 Active barrier with power supply (e.g. RN221N); observe terminal voltage
2 HART communication resistor (≥ 250 Ω); observe maximum load
3 Connection for Commubox FXA195 or FieldXpert SFX350/SFX370 (via VIATOR Bluetooth modem)
4 Analog display device; observe maximum load
5 Cable screen; observe cable specification
6 Measuring device
7 Analog display device; observe maximum load
8 Active barrier with power supply (e.g. RN221N), current output 2; observe terminal voltage

Terminal assignment 4-wire: 4-20 mA HART (10.4 to 48 V_{DC})

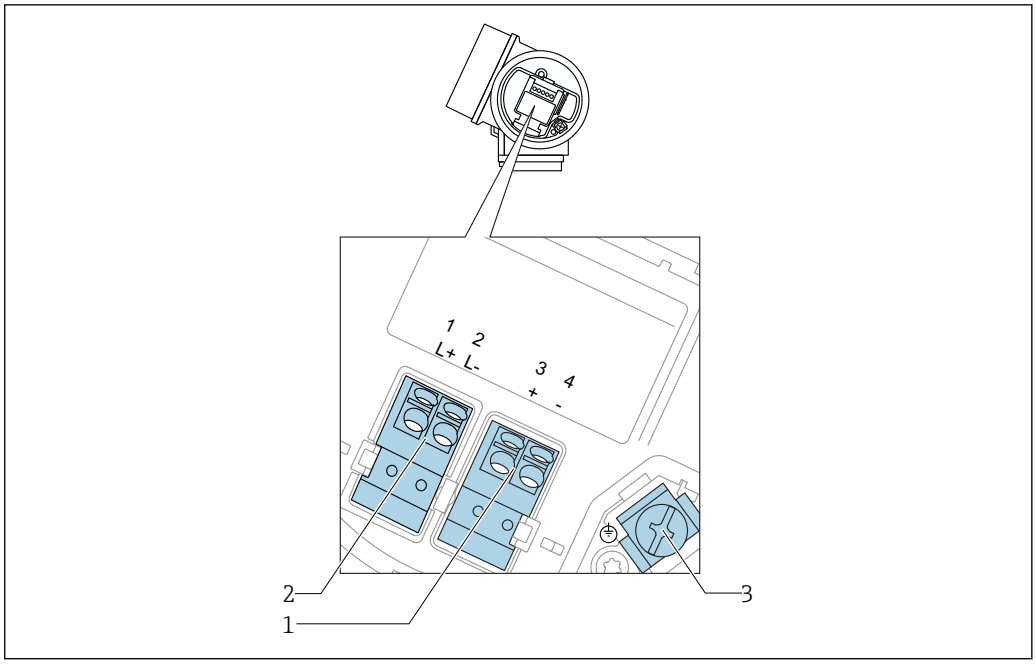

16 *Terminal assignment 4-wire: 4-20 mA HART (10.4 to 48 V_{DC})*

1 *Connection 4-20 mA HART (active): terminals 3 and 4*
2 *Connection supply voltage: terminals 1 and 2*
3 *Terminal for cable screen*

Block diagram 4-wire: 4-20 mA HART (10.4 to 48 V_{DC})

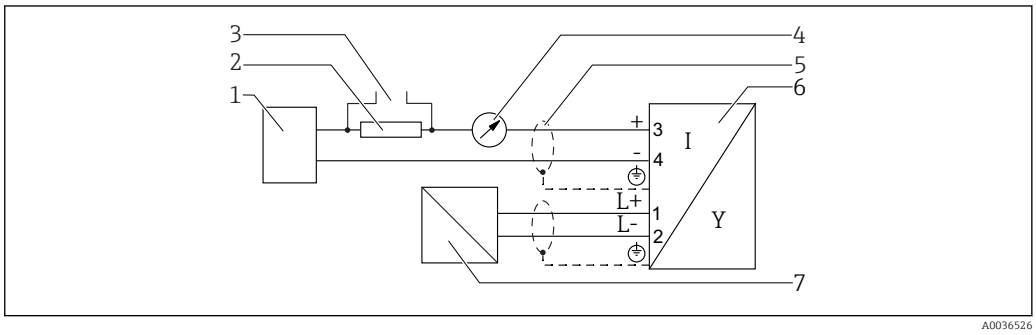

17 *Block diagram 4-wire: 4-20 mA HART (10.4 to 48 V_{DC})*

1 *Evaluation unit, e.g. PLC*
2 *HART communication resistor (≥ 250 Ω); observe maximum load*
3 *Connection for Commubox FXA195 or FieldXpert SFX350/SFX370 (via VIATOR Bluetooth modem)*
4 *Analog display device; observe maximum load*
5 *Cable screen; observe cable specification*
6 *Measuring device*
7 *Supply voltage; observe terminal voltage, observe cable specification*

Terminal assignment 4-wire: 4-20 mA HART (90 to 253 V_{AC})

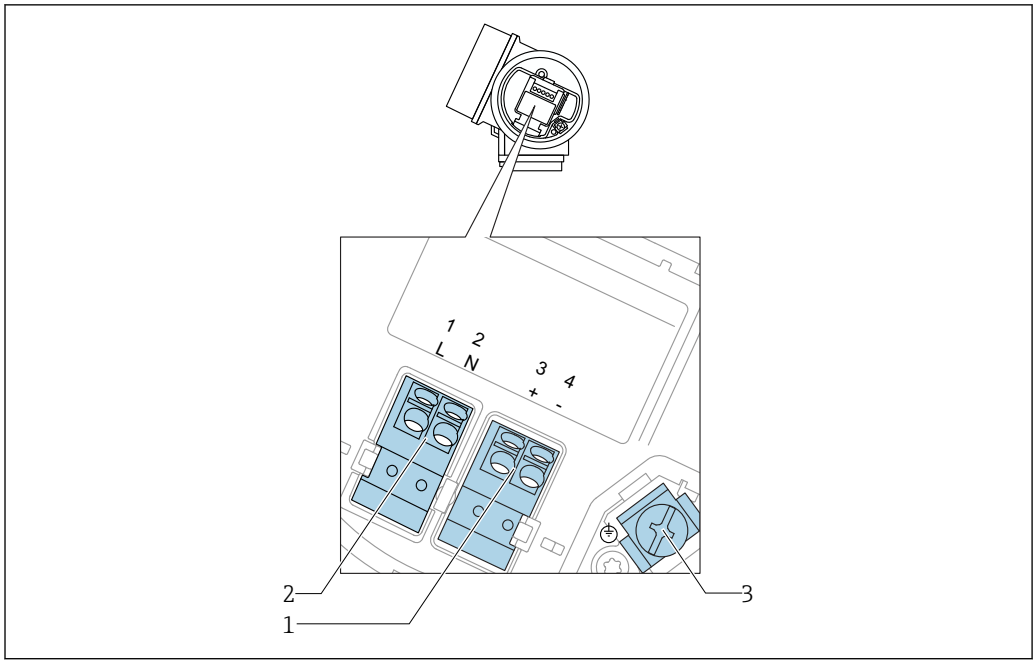

18 *Terminal assignment 4-wire: 4-20 mA HART (90 to 253 V_{AC})*

1 *Connection 4-20 mA HART (active): terminals 3 and 4*
2 *Connection supply voltage: terminals 1 and 2*
3 *Terminal for cable screen*

⚠ CAUTION

To ensure electrical safety:

- ▶ Do not disconnect the protective connection.
- ▶ Disconnect the supply voltage before disconnecting the protective earth.

Connect protective earth to the internal ground terminal (3) before connecting the supply voltage. If necessary, connect the potential matching line to the external ground terminal.

In order to ensure electromagnetic compatibility (EMC): Do **not** only ground the device via the protective earth conductor of the supply cable. Instead, the functional grounding must also be connected to the process connection (flange or threaded connection) or to the external ground terminal.

An easily accessible power switch must be installed in the proximity of the device. The power switch must be marked as a disconnector for the device (IEC/EN61010).

Block diagram 4-wire: 4-20 mA HART (90 to 253 V_{AC})

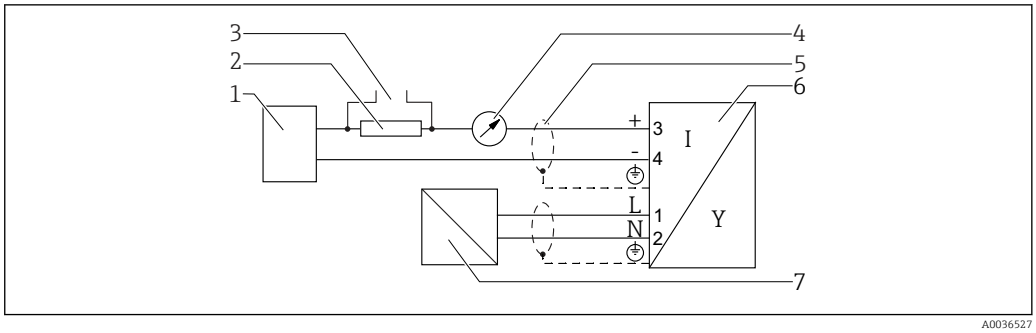

19 *Block diagram 4-wire: 4-20 mA HART (90 to 253 V_{AC})*

1 *Evaluation unit, e.g. PLC*
2 *HART communication resistor (≥ 250 Ω); observe maximum load*
3 *Connection for Commubox FXA195 or FieldXpert SFX350/SFX370 (via VIATOR Bluetooth modem)*
4 *Analog display device; observe maximum load*
5 *Cable scree; observe cable specification*
6 *Measuring device*
7 *Supply voltage; observe terminal voltage, observe cable specification*

Connection examples for the switch output

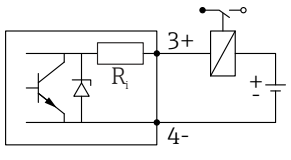

A0015909

20 Connection of a relay

Suitable relays (examples):
- Solid-state relay: Phoenix Contact OV-24DC/480AC/5 with mounting rail connector UMK-1 OM-R/AMS
- Electromechanical relay: Phoenix Contact PLC-RSC-12DC/21

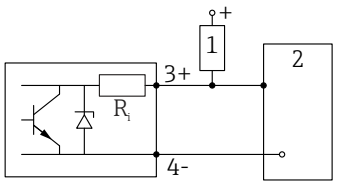

A0015910

21 Connection of a digital input

1 Pull-up resistor
2 Digital input

For optimum interference immunity we recommend to connect an external resistor (internal resistance of the relay or Pull-up resistor) of < 1 000 Ω.

7.1.2 Cable specification

- **Devices without integrated overvoltage protection**
  Pluggable spring-force terminals for wire cross-sections 0.5 to 2.5 mm² (20 to 14 AWG)
- **Devices with integrated overvoltage protection**
  Screw terminals for wire cross-sections 0.2 to 2.5 mm² (24 to 14 AWG)
- For ambient temperature $T_U \geq 60$ °C (140 °F): use cable for temperature T_U +20 K.

HART

- A normal device cable suffices if only the analog signal is used.
- A shielded cable is recommended if using the HART protocol. Observe grounding concept of the plant.
- For 4-wire devices: Standard device cable is sufficient for the power line.

7.1.3 Device plug connectors

For the versions with fieldbus plug connector (M12 or 7/8"), the signal line can be connected without opening the housing.

Pin assignment of the M12 plug connector

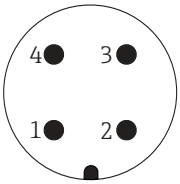

Pin	Meaning
1	Signal +
2	not connected
3	Signal -
4	Ground

Pin assignment of the 7/8" plug connector

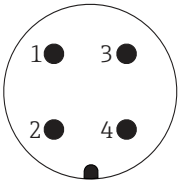

Pin	Meaning
1	Signal -
2	Signal +
3	Not connected
4	Screen

7.1.4 Supply voltage

2-wire, 4-20mA HART, passive

"Power Supply, Output" [1]	"Approval" [2]	Terminal voltage U at the device	Maximum load R, depending on the supply voltage U_0 at the supply unit
A: 2-wire; 4-20mA HART	▪ Non-Ex ▪ Ex nA ▪ Ex ic ▪ CSA GP	10.4 to 35 V [3] [4] [5]	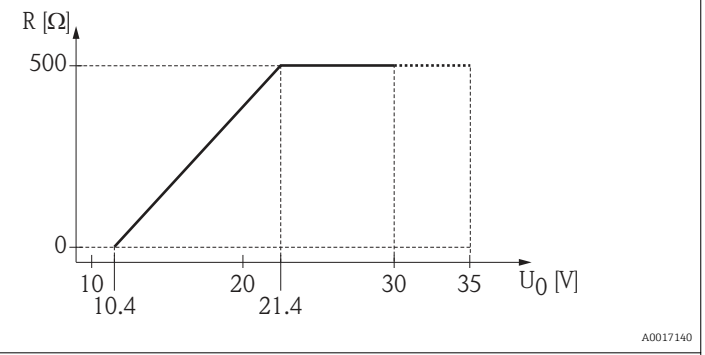
	Ex ia / IS	10.4 to 30 V [3] [4] [5]	
	▪ Ex d(ia) / XP ▪ Ex ic(ia) ▪ Ex nA(ia) ▪ Ex ta / DIP	13 to 35 V [5] [6]	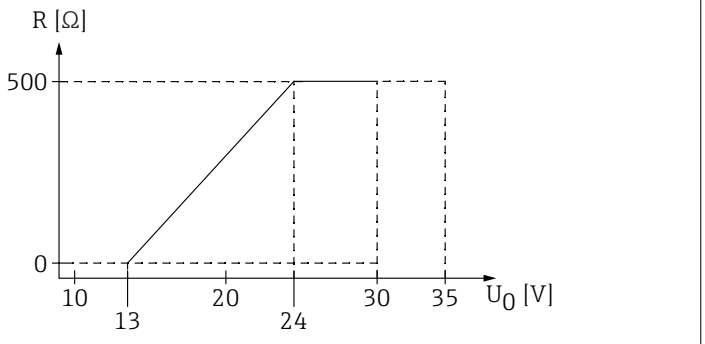
	Ex ia + Ex d(ia) / IS + XP	13 to 30 V [5] [6]	

1) Feature 020 of the product structure
2) Feature 010 of the product structure
3) For ambient temperatures $T_a \leq$ -20 °C (-4 °F) a minimum voltage of 15 V is required for the sartup of the device at the minimum error current (3,6 mA). The startup current can be parametrized. If the device is operated with a fixed current I ≥ 5,5 mA (HART multidrop mode), a voltage of U ≥ 10,4 V is sufficient throughout the entire range of ambient temperatures.
4) In the current simulation mode a voltage U ≥ 12.5 V is required.
5) If the Bluetooth modem is used, the minimum supply voltage increases by 3 V.
6) For ambient temperatures $T_a \leq$ -20 °C (-4 °F) a minimum voltage of 16 V is required for the startup of the device at the minimum error current (3.6 mA).

"Power Supply, Output" [1]	"Approval" [2]	Terminal voltage U at the device	Maximum load R, depending on the supply voltage U_0 at the supply unit
B: 2-wire; 4-20 mA HART, switch output	▪ Non-Ex ▪ Ex nA ▪ Ex nA(ia) ▪ Ex ic ▪ Ex ic(ia) ▪ Ex d(ia) / XP ▪ Ex ta / DIP ▪ CSA GP	13 to 35 V [3] [4]	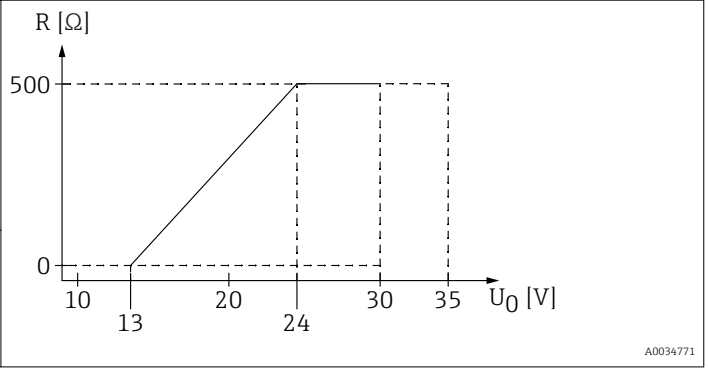
	▪ Ex ia / IS ▪ Ex ia + Ex d(ia) / IS + XP	13 to 30 V [3] [4]	

1) Feature 020 of the product structure
2) Feature 010 of the product structure
3) For ambient temperatures $T_a \leq$ -30 °C (-22 °F) a minimum voltage of 16 V is required for the startup of the device at the minimum error current (3.6 mA).
4) If the Bluetooth modem is used, the minimum supply voltage increases by 3 V.

"Power Supply, Output" [1]	"Approval" [2]	Terminal voltage U at the device	Maximum load R, depending on the supply voltage U_0 at the supply unit
C: 2-wire; 4-20mA HART, 4-20mA	any	13 to 28 V [3] [4]	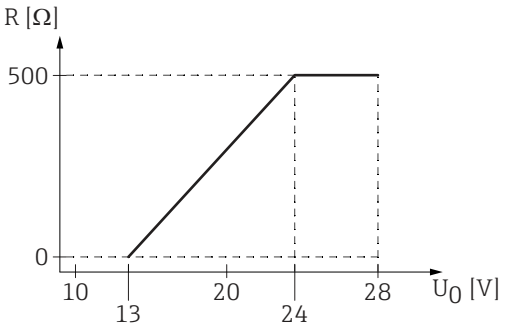

1) Feature 020 of the product structure
2) Feature 010 of the product structure
3) For ambient temperatures $T_a \leq$ -30 °C (-22 °F) a minimum voltage of 16 V is required for the startup of the device at the minimum error current (3.6 mA).
4) If the Bluetooth modem is used, the minimum supply voltage increases by 3 V.

Polarity reversal protection	Yes
Admissible residual ripple at f = 0 to 100 Hz	U_{SS} < 1 V
Admissible residual ripple at f = 100 to 10000 Hz	U_{SS} < 10 mV

4-wire, 4-20mA HART, active

"Power supply; Output" [1]	Terminal voltage	Maximum load R_{max}
K: 4-wire 90-253VAC; 4-20mA HART	90 to 253 V_{AC} (50 to 60 Hz), overvoltage category II	500 Ω
L: 4-wire 10,4-48VDC; 4-20mA HART	10.4 to 48 V_{DC}	

1) Feature 020 of the product structure

7.1.5 Overvoltage protection

If the measuring device is used for level measurement in flammable liquids which requires the use of overvoltage protection according to DIN EN 60079-14, standard for test procedures 60060-1 (10 kA, pulse 8/20 µs), an overvoltage protection module has to be installed.

Integrated overvoltage protection module

An integrated overvoltage protection module is available for 2-wire HART as well as PROFIBUS PA and FOUNDATION Fieldbus devices.

Product structure: Feature 610 "Accessory mounted", option NA "Overvoltage protection".

Technical data	
Resistance per channel	2 × 0.5 Ω max.
Threshold DC voltage	400 to 700 V
Threshold impulse voltage	< 800 V
Capacitance at 1 MHz	< 1.5 pF
Nominal arrest impulse voltage (8/20 µs)	10 kA

External overvoltage protection module

HAW562 or HAW569 from Endress+Hauser are suited as external overvoltage protection.

7.2 Connecting the measuring device

⚠ WARNING

Risk of explosion!

- ▶ Observe applicable national standards.
- ▶ Comply with the specifications in the Safety Instructions (XA).
- ▶ Use specified cable glands only.
- ▶ Check to ensure that the power supply matches the information on the nameplate.
- ▶ Switch off the power supply before connecting the device.
- ▶ Connect the potential matching line to the outer ground terminal before applying the power supply.

Required tools/accessories:

- For devices with a cover lock: Allen key AF3
- Wire stripper
- When using stranded cables: One ferrule for every wire to be connected.

7.2.1 Opening connection compartment cover

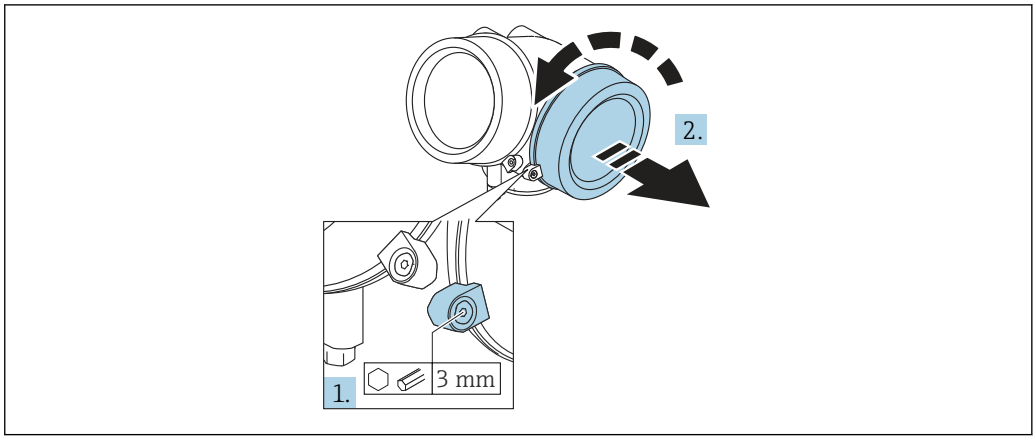

A0021490

1. Loosen the screw of the securing clamp of the connection compartment cover using an Allen key (3 mm) and turn the clamp 90 ° clockwise.
2. Afterwards unscrew connection compartment cover and check lid gasket, replace if necessary.

7.2.2 Connecting

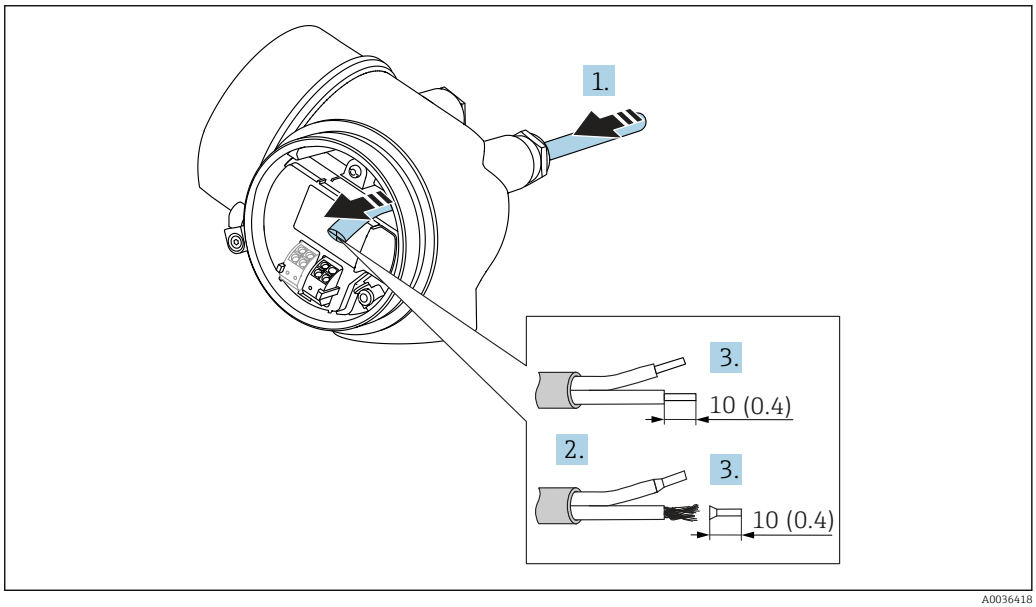

A0036418

22 *Dimensions: mm (in)*

1. Push the cable through the cable entry . To ensure tight sealing, do not remove the sealing ring from the cable entry.
2. Remove the cable sheath.
3. Strip the cable ends over a length of 10 mm (0.4 in). In the case of stranded cables, also fit ferrules.
4. Firmly tighten the cable glands.

5. Connect the cable in accordance with the terminal assignment.

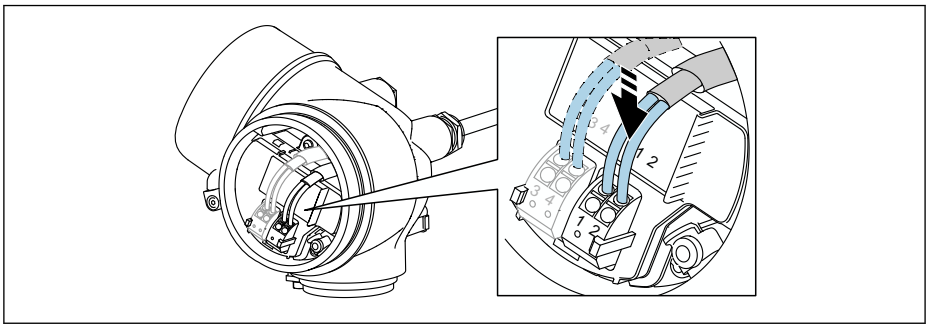

A0034682

6. If using shielded cables: Connect the cable shield to the ground terminal.

7.2.3 Plug-in spring-force terminals

In the case of devices without integrated overvoltage protection, electrical connection is via plug-in spring-force terminals. Rigid conductors or flexible conductors with ferrules can be inserted directly into the terminal without using the lever, and create a contact automatically.

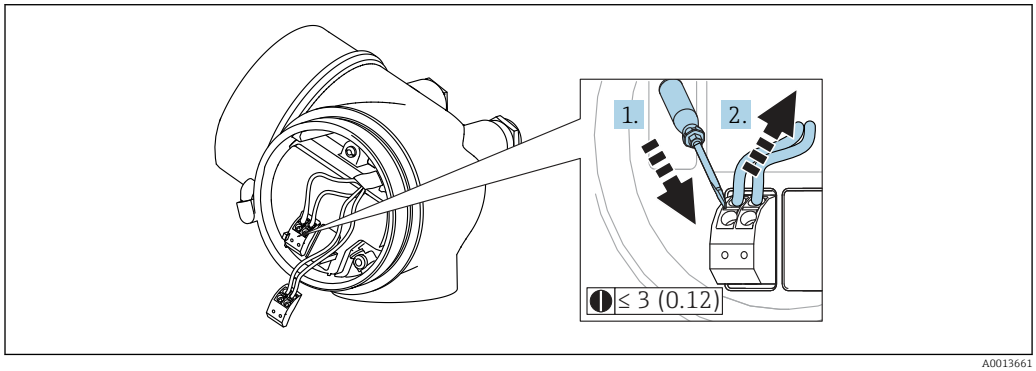

A0013661

23 Dimensions: mm (in)

To remove cables from the terminal:

1. Using a flat-blade screwdriver ≤ 3 mm, press down on the slot between the two terminal holes
2. while simultaneously pulling the cable end out of the terminal.

7.2.4 Closing connection compartment cover

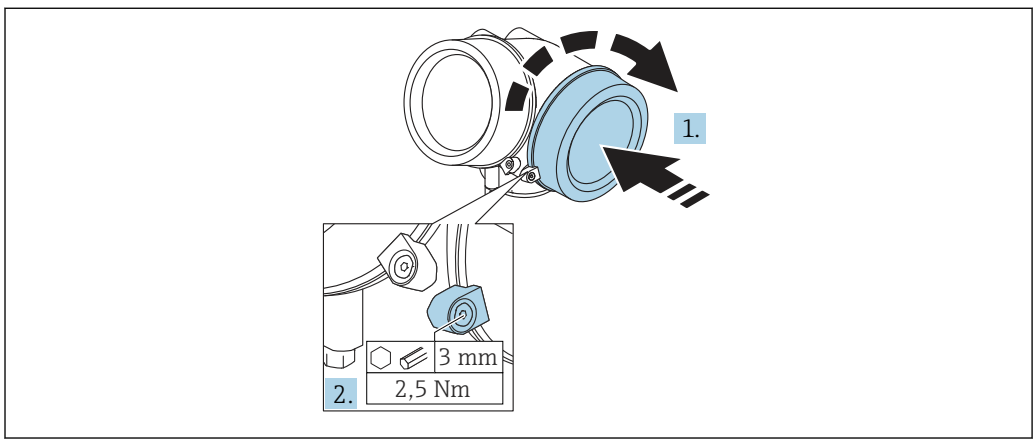

A0021491

1. Screw back firmly connection compartment cover.
2. Turning securing clamp 90 ° counterclockwise and tighten the clamp with 2.5 Nm (1.84 lbf ft) again using the Allen key (3 mm).

7.3 Post-connection check

❑	Is the device or cable undamaged (visual check)?
❑	Do the cables comply with the requirements ?
❑	Do the cables have adequate strain relief?
❑	Are all cable glands installed, securely tightened and leak-tight?
❑	Does the supply voltage match the specifications on the nameplate?
❑	Is the terminal assignment correct?
❑	If required: Has protective ground connection been established ?
❑	If supply voltage is present, is the device ready for operation and do values appear on the display module?
❑	Are all housing covers installed and securely tightened?
❑	Is the securing clamp tightened correctly?

8 Operation options

8.1 Overview

8.1.1 Local operation

Operation with	*Pushbuttons*	*Touch Control*
Order code for "Display; Operation"	Option **C** "SD02"	Option **E** "SD03"
	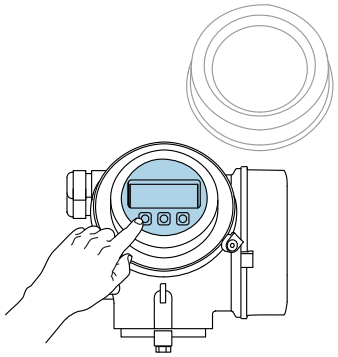 A0036312	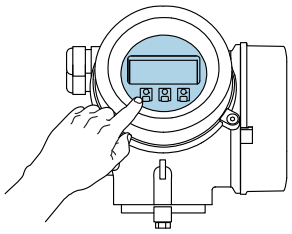 A0036313
Display elements	4-line display	4-line display white background lighting; switches to red in event of device error
	Format for displaying measured variables and status variables can be individually configured	
	Permitted ambient temperature for the display: –20 to +70 °C (–4 to +158 °F) The readability of the display may be impaired at temperatures outside the temperature range.	
Operating elements	local operation with 3 push buttons (⊞, ⊟, Ⓔ)	external operation via touch control; 3 optical keys: ⊞, ⊟, Ⓔ
	Operating elements also accessible in various hazardous areas	
Additional functionality	Data backup function The device configuration can be saved in the display module.	
	Data comparison function The device configuration saved in the display module can be compared to the current device configuration.	
	Data transfer function The transmitter configuration can be transmitted to another device using the display module.	

8.1.2 Operation with remote display and operating module FHX50

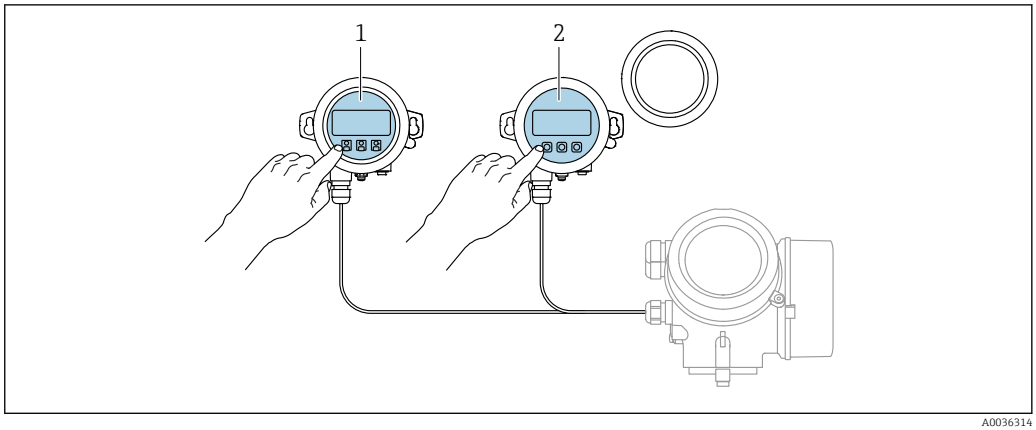

24 FHX50 operating options

1 Display and operating module SD03, optical keys; can be operated through the glass of the cover
2 Display and operating module SD02, push buttons; cover must be removed

8.1.3 Operation via Bluetooth® wireless technology

Requirements

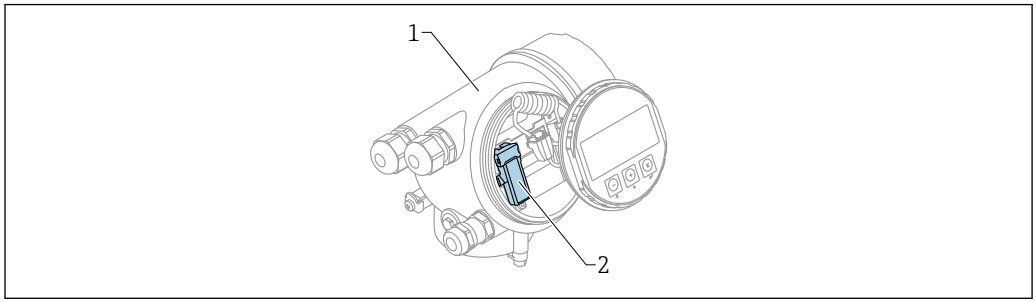

25 Device with Bluetooth module

1 Electronics housing of the device
2 Bluetooth module

This operation option is only available for devices with Bluetooth module. There are the following options:
- The device has been ordered with a Bluetooth module:
  Feature 610 "Accessory Mounted", option NF "Bluetooth"
- The Bluetooth module has been ordered as an accessory (ordering number: 71377355) and has been mounted. See Special Documentation SD02252F.

Operation via SmartBlue (app)

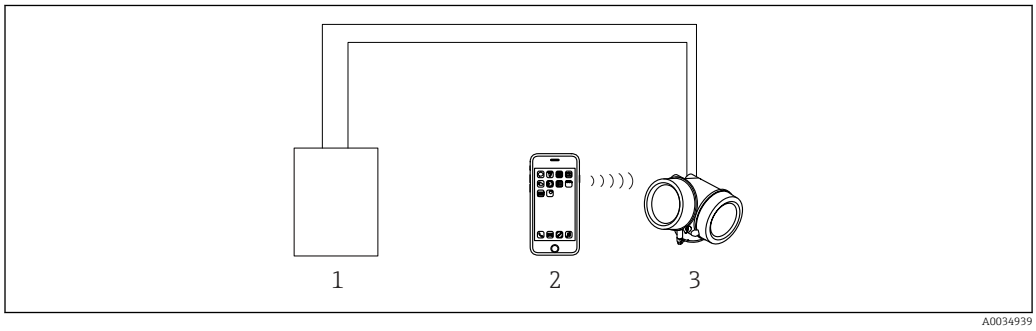

26 Operation via SmartBlue (app)

1 Transmitter power supply unit
2 Smartphone / tablet with SmartBlue (app)
3 Transmitter with Bluetooth module

8.1.4 Remote operation

Via HART protocol

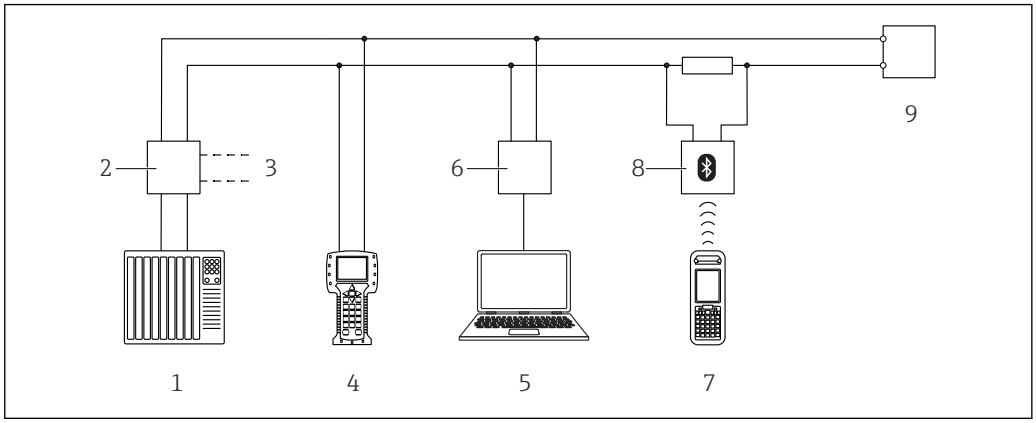

27 *Options for remote operation via HART protocol*

1 *PLC (Programmable Logic Controller)*
2 *Transmitter power supply unit, e.g. RN221N (with communication resistor)*
3 *Connection for Commubox FXA191, FXA195 and Field Communicator 375, 475*
4 *Field Communicator 475*
5 *Computer with operating tool (e.g. DeviceCare/FieldCare , AMS Device Manager, SIMATIC PDM)*
6 *Commubox FXA191 (RS232) or FXA195 (USB)*
7 *Field Xpert SFX350/SFX370*
8 *VIATOR Bluetooth modem with connecting cable*
9 *Transmitter*

DeviceCare/FieldCare via service interface (CDI)

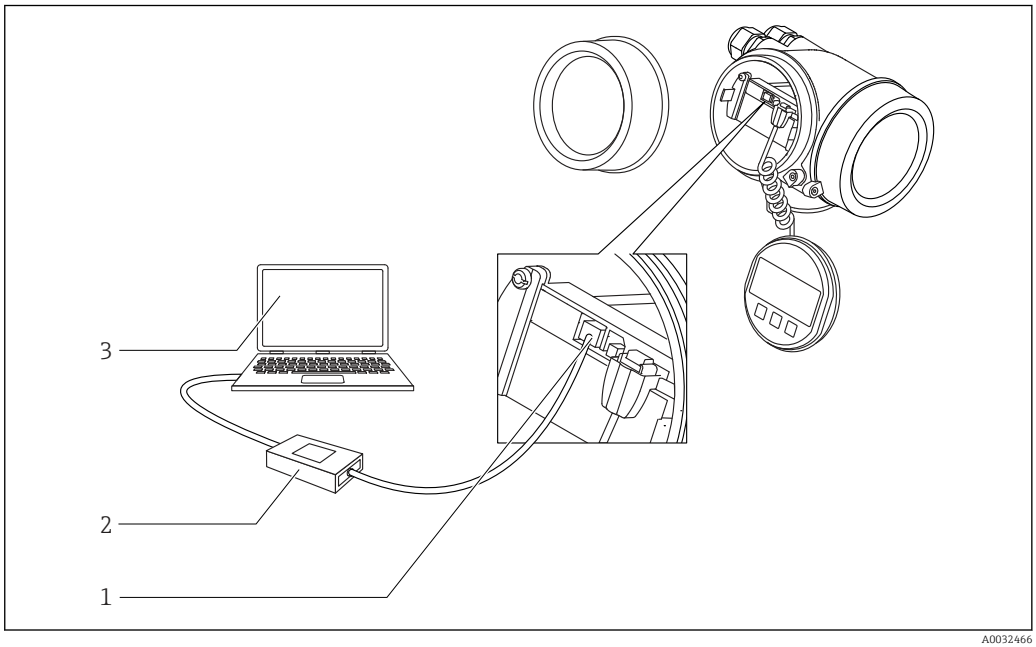

28 *DeviceCare/FieldCare via service interface (CDI)*

1 *Service interface (CDI) of the instrument (= Endress+Hauser Common Data Interface)*
2 *Commubox FXA291*
3 *Computer with DeviceCare/FieldCare operating tool*

8.2 Structure and function of the operating menu

8.2.1 Structure of the operating menu

Menu	Submenu / parameter	Meaning
	Language [1]	Defines the operating language of the on-site display
Commissioning [2]		Launches the interactive wizard for guided commissioning. Additional settings generally do not need to be made in the other menus when the wizard is finished.
Setup	Parameter 1 ... Parameter N	Once values have been set for these parameters, the measurement should generally be completely configured.
	Advanced setup	Contains additional submenus and parameters: ▪ to adapt the device to special measuring conditions. ▪ to process the measured value (scaling, linearization). ▪ to configure the signal output.
Diagnostics	**Diagnostic list**	Contains up to 5 currently active error messages.
	Event logbook [3]	Contains the last 20 messages (which are no longer active).
	Device information	Contains information for identifying the device.
	Measured values	Contains all current measured values.
	Data logging	Contains the history of the individual measuring values.
	Simulation	Is used to simulate measured values or output values.
	Device check	Contains all parameters needed to check the measurement capability of the device.
	Heartbeat [4]	Contains all the wizards for the **Heartbeat Verification** and **Heartbeat Monitoring** application packages.
Expert [5] Contains all parameters of the device (including those that are already in one of the other menus). This menu is organized according to the function blocks of the device. The parameters of the Expert menu are described in: GP01014F (HART)	**System**	Contains all higher-order device parameters that do not concern the measurement or measured value communication.
	Sensor	Contains all parameters needed to configure the measurement.
	Output	▪ Contains all parameters needed to configure the current output. ▪ Contains all parameters needed to configure the switch output (PFS).

Menu	Submenu / parameter	Meaning
	Communication	Contains all parameters needed to configure the digital communication interface.
	Diagnostics	Contains all parameters needed to detect and analyze operational errors.

1) If operating via operating tools (e.g. FieldCare), the "Language" parameter is located under "Setup → Advanced setup → Display"
2) Only if operating via an FDT/DTM system
3) only available with local operation
4) only available if operating via DeviceCare or FieldCare
5) On entering the "Expert" menu, an access code is always requested. If a customer specific access code has not been defined, "0000" has to be entered.

8.2.2 User roles and related access authorization

The two user roles **Operator** and **Maintenance** have different write access to the parameters if a device-specific access code has been defined. This protects the device configuration via the local display from unauthorized access → 56.

Access authorization to parameters

User role	Read access		Write access	
	Without access code (from the factory)	With access code	Without access code (from the factory)	With access code
Operator	✔	✔	✔	--
Maintenance	✔	✔	✔	✔

If an incorrect access code is entered, the user obtains the access rights of the **Operator** role.

The user role with which the user is currently logged on is indicated by the **Access status display** parameter (for display operation) or **Access status tooling** parameter (for tool operation).

8.2.3 Data access - Security

Write protection via access code

Using the device-specific access code, the parameters for the measuring device configuration are write-protected and their values can no longer be changed via local operation.

Define access code via local display

1. Navigate to: Setup → Advanced setup → Administration → Define access code → Define access code
2. Define a max. 4-digit numeric code as an access code.
3. Repeat the same code in **Confirm access code** parameter.
   ↳ The 🔒-symbol appears in front of all write-protected parameters.

Define access code via operating tool (e.g. FieldCare)

1. Navigate to: Setup → Advanced setup → Administration → Define access code
2. Define a max. 4-digit numeric code as an access code.
   ↳ Write protection is active.

Parameters that can always be changed

The write protection does not include certain parameters that do not affect the measurement. Despite the defined access code, they can always be modified, even if the other parameters are locked.

The device automatically locks the write-protected parameters again if a key is not pressed for 10 minutes in the navigation and editing view. The device locks the write-protected parameters automatically after 60 s if the user skips back to the measured value display mode from the navigation and editing view.

- If write access is activated via access code, it can be also be deactivated only via the access code → 57.
- In the "Description of Device Parameters" documents, each write-protected parameter is identified with the 🔒-symbol.

Disabling write protection via access code

If the 🔒-symbol appears on the local display in front of a parameter, the parameter is write-protected by a device-specific access code and its value cannot be changed at the moment using the local display → 📄 56.

The locking of the write access via local operation can be disabled by entering the device-specific access code.

1. After you press Ⓔ, the input prompt for the access code appears.
2. Enter the access code.
   ↳ The 🔒-symbol in front of the parameters disappears; all previously write-protected parameters are now re-enabled.

Deactivation of the write protection via access code

Via local display

1. Navigate to: Setup → Advanced setup → Administration → Define access code → Define access code
2. Enter **0000**.
3. Repeat **0000** in **Confirm access code** parameter.
   ↳ The write protection is deactivated. Parameters can be changed without entering an access code.

Via an operating tool (e.g. FieldCare)

1. Navigate to: Setup → Advanced setup → Administration → Define access code
2. Enter **0000**.
   ↳ The write protection is deactivated. Parameters can be changed without entering an access code.

Write protection via write protection switch

Unlike parameter write protection via a user-specific access code, this allows write access to the entire operating menu - except for the **"Contrast display" parameter** - to be locked.

The parameter values are now read only and cannot be edited any more (exception **"Contrast display" parameter**):
- Via local display
- Via service interface (CDI)
- Via HART protocol

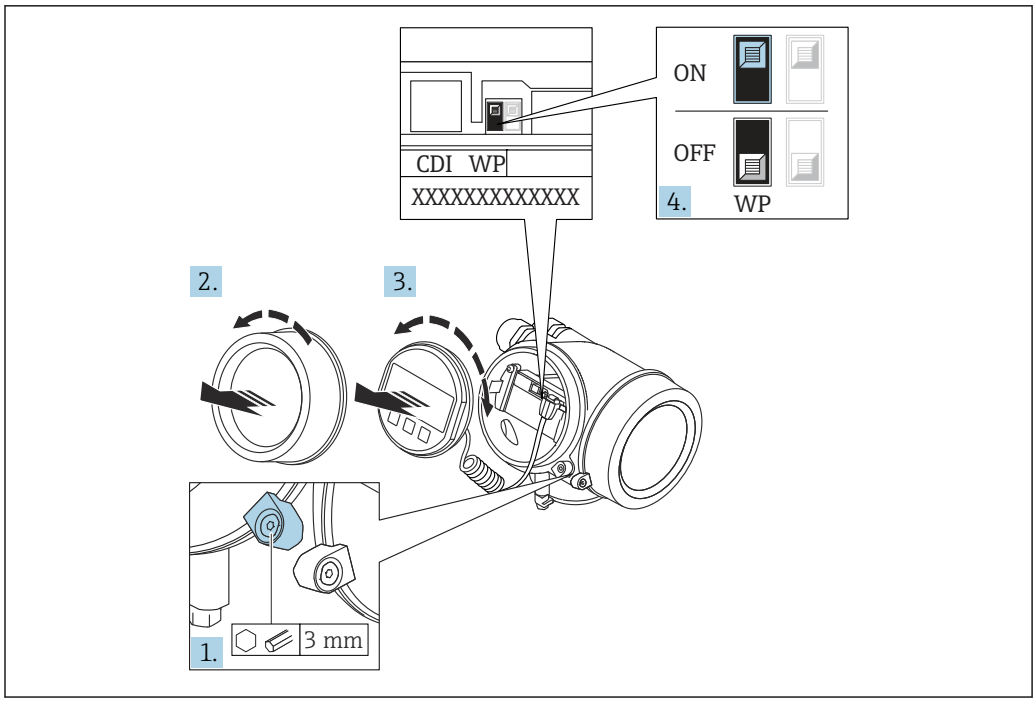

A0026157

1. Loosen the securing clamp.
2. Unscrew the electronics compartment cover.
3. Pull out the display module with a gentle rotational movement. To make it easier to access the lock switch, attach the display module to the edge of the electronics compartment.

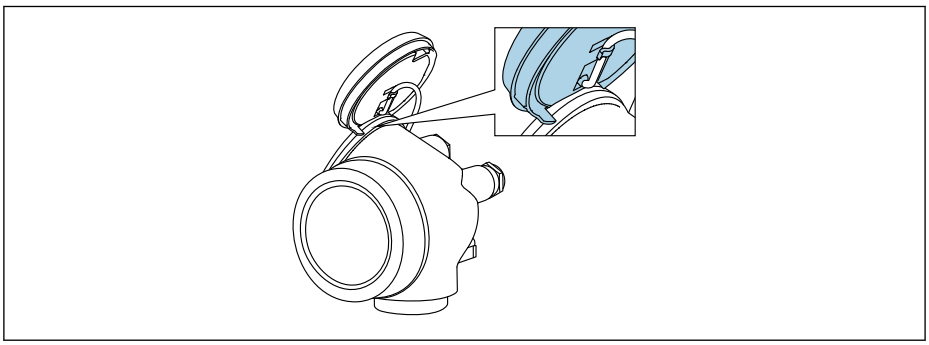

A0036086

4. Setting the write protection switch (WP) on the main electronics module to the **ON** position enables hardware write protection. Setting the write protection switch (WP) on the main electronics module to the **OFF** position (factory setting) disables hardware write protection.
   ↳ If the hardware write protection is enabled: The **Hardware locked** option is displayed in the **Locking status** parameter. In addition, on the local display the 🔒-symbol appears in front of the parameters in the header of the operational display and in the navigation view.

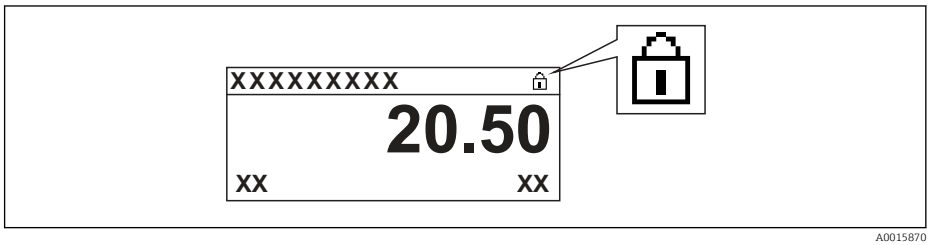

A0015870

   If the hardware write protection is disabled: No option is displayed in the **Locking status** parameter. On the local display, the 🔒-symbol disappears from in front of the parameters in the header of the operational display and in the navigation view.

5. Feed the cable into the gap between the housing and main electronics module and plug the display module into the electronics compartment in the desired direction until it engages.
6. Reverse the removal procedure to reassemble the transmitter.

Enabling and disabling the keypad lock

The keypad lock makes it possible to block access to the entire operating menu via local operation. As a result, it is no longer possible to navigate through the operating menu or change the values of individual parameters. Users can only read the measured values on the operational display.

The keypad lock is switched on and off via the context menu.

Switching on the keypad lock

For the SD03 display only
The keypad lock is switched on automatically:
- If the device has not been operated via the display for > 1 minute.
- Each time the device is restarted.

To activate the keylock manually:

1. The device is in the measured value display.
   Press E for at least 2 seconds.
   ↳ A context menu appears.
2. In the context menu select the **Keylock on** option.
   ↳ The keypad lock is switched on.

If the user attempts to access the operating menu while the keypad lock is active, the message **Keylock on** appears.

Switching off the keypad lock

1. The keypad lock is switched on.
   Press E for at least 2 seconds.
   ↳ A context menu appears.
2. In the context menu select the **Keylock off** option.
   ↳ The keypad lock is switched off.

Bluetooth® wireless technology

Signal transmission via Bluetooth® wireless technology uses a cryptographic technique tested by the Fraunhofer Institute
- The device is not visible via *Bluetooth*® wireless technology without the SmartBlue app
- Only one point-to-point connection between **one** sensor and **one** smartphone or tablet is established

8.3 Display and operating module

8.3.1 Display appearance

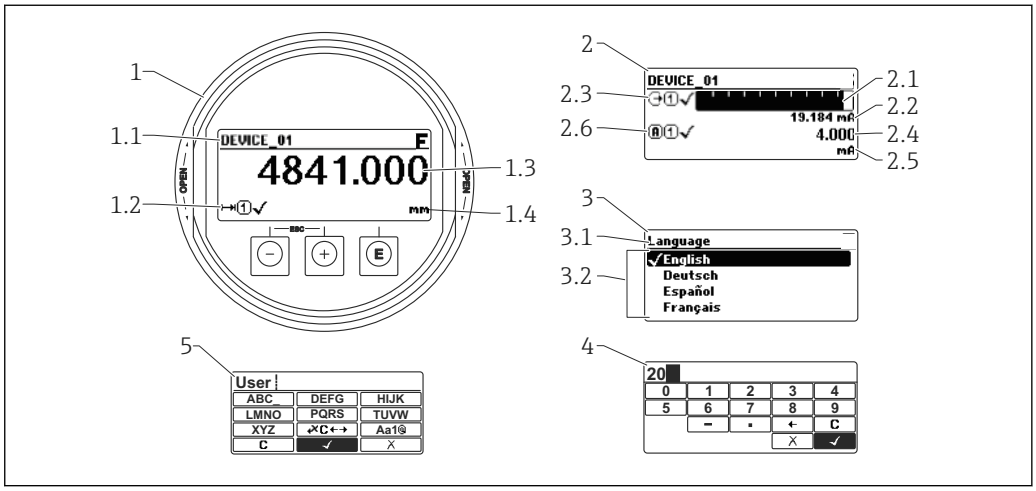

29 *Appearance of the display and operation module for on-site operation*

1 Measured value display (1 value max. size)
1.1 Header containing tag and error symbol (if an error is active)
1.2 Measured value symbols
1.3 Measured value
1.4 Unit
2 Measured value display (1 bargraph + 1 value)
2.1 Bargraph for measured value 1
2.2 Measured value 1 (including unit)
2.3 Measured value symbols for measured value 1
2.4 Measured value 2
2.5 Unit for measured value 2
2.6 Measured value symbols for measured value 2
3 Representation of a parameter (here: a parameter with selection list)
3.1 Header containing parameter name and error symbol (if an error is active)
3.2 Selection list; ☑ marks the current parameter value.
4 Input matrix for numbers
5 Input matrix for alphanumeric and special characters

Display symbols for the submenus

Symbol	Meaning
 A0018367	**Display/operation** Is displayed: ▪ in the main menu next to the selection "Display/operation" ▪ in the header, if you are in the "Display/operation" menu
 A0018364	**Setup** Is displayed: ▪ in the main menu next to the selection "Setup" ▪ in the header, if you are in the "Setup" menu
 A0018365	**Expert** Is displayed: ▪ in the main menu next to the selection "Expert" ▪ in the header, if you are in the "Expert" menu
 A0018366	**Diagnostics** Is displayed: ▪ in the main menu next to the selection "Diagnostics" ▪ in the header, if you are in the "Diagnostics" menu

Status signals

F A0032902	**"Failure"** A device error is present. The measured value is no longer valid.
C A0032903	**"Function check"** The device is in service mode (e.g. during a simulation).
S A0032904	**"Out of specification"** The device is operated: ▪ Outside of its technical specifications (e.g. during startup or a cleaning) ▪ Outside of the configuration carried out by the user (e.g. level outside configured span)
M A0032905	**"Maintenance required"** Maintenance is required. The measured value is still valid.

Display symbols for the locking state

Symbol	Meaning
 A0013148	**Display parameter** Marks display-only parameters which can not be edited.
 A0013150	**Device locked** ▪ In front of a parameter name: The device is locked via software and/or hardware. ▪ In the header of the measured value screen: The device is locked via hardware.

Measured value symbols

Symbol	Meaning
Measured values	
 A0032892	**Level**
 A0032893	**Distance**
 A0032908	**Current output**
 A0032894	**Measured current**
 A0032895	**Terminal voltage**
 A0032896	**Temperature of the electronics or the sensor**
Measuring channels	
 A0032897	**Measuring channel 1**
 A0032898	**Measuring channel 2**
Status of the measured value	
 A0018361	**Status "Alarm"** The measurment is interrupted. The output assumes the defined alarm value. A diagnostic message is generated.
 A0018360	**Status "Warning"** The device continues measuring. A diagnostic message is generated.

8.3.2 Operating elements

Key	Meaning
 A0018330	**Minus key** *For menu, submenu* Moves the selection bar upwards in a picklist. *For text and numeric editor* In the input mask, moves the selection bar to the left (backwards).
 A0018329	**Plus key** *For menu, submenu* Moves the selection bar downwards in a picklist. *For text and numeric editor* In the input mask, moves the selection bar to the right (forwards).
 A0018328	**Enter key** *For measured value display* ▪ Pressing the key briefly opens the operating menu. ▪ Pressing the key for 2 s opens the context menu. *For menu, submenu* ▪ Pressing the key briefly Opens the selected menu, submenu or parameter. ▪ Pressing the key for 2 s for parameter: If present, opens the help text for the function of the parameter. *For text and numeric editor* ▪ Pressing the key briefly – Opens the selected group. – Carries out the selected action. ▪ Pressing the key for 2 s confirms the edited parameter value.
 A0032909	**Escape key combination (press keys simultaneously)** *For menu, submenu* ▪ Pressing the key briefly – Exits the current menu level and takes you to the next higher level. – If help text is open, closes the help text of the parameter. ▪ Pressing the key for 2 s returns you to the measured value display ("home position"). *For text and numeric editor* Closes the text or numeric editor without applying changes.
 A0032910	**Minus/Enter key combination (press and hold down the keys simultaneously)** Reduces the contrast (brighter setting).
 A0032911	**Plus/Enter key combination (press and hold down the keys simultaneously)** Increases the contrast (darker setting).

8.3.3 Entering numbers and text

Numeric editor	Text editor
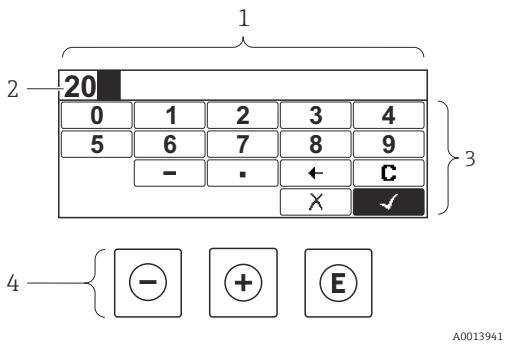	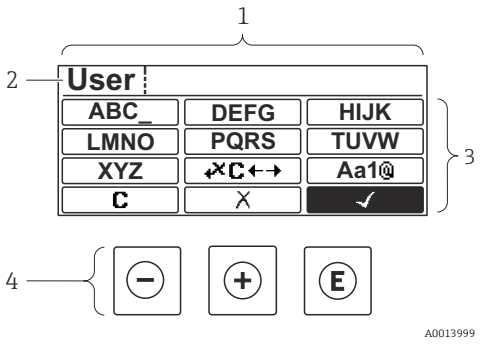

1 Editing view
2 Display area of the entered values
3 Input mask
4 Operating elements

Input mask

The following input symbols are available in the input mask of the numeric and text editor:

Numeric editor symbols

Symbol	Meaning
 A0013998	Selection of numbers from 0 to 9.
 A0016619	Inserts decimal separator at the input position.
 A0016620	Inserts minus sign at the input position.
 A0013985	Confirms selection.
 A0016621	Moves the input position one position to the left.
 A0013986	Exits the input without applying the changes.
 A0014040	Clears all entered characters.

Text editor symbols

Symbol	Meaning
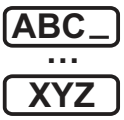 A0013997	Selection of letters from A to Z
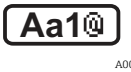 A0013981	Toggle ▪ Between upper-case and lower-case letters ▪ For entering numbers ▪ For entering special characters

 A0013985	Confirms selection.
 A0013987	Switches to the selection of the correction tools.
 A0013986	Exits the input without applying the changes.
 A0014040	Clears all entered characters.

Correction symbols under

Symbol	Meaning
 A0032907	Clears all entered characters.
 A0018324	Moves the input position one position to the right.
 A0018326	Moves the input position one position to the left.
 A0032906	Deletes one character immediately to the left of the input position.

8.3.4 Opening the context menu

Using the context menu, the user can call up the following menus quickly and directly from the operational display:

- Setup
- Conf. backup disp.
- Env.curve
- Keylock on

Opening and closing the context menu

The user is in the operational display.

1. Press E for 2 s.
   ↳ The context menu opens.

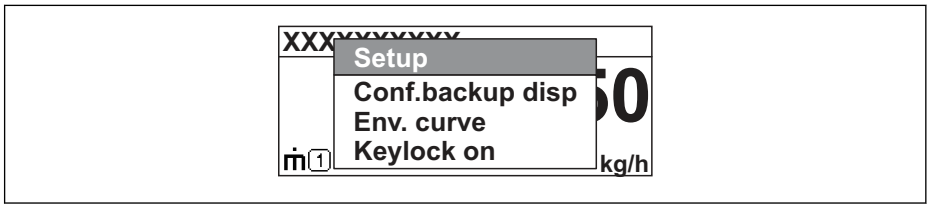

2. Press − + + simultaneously.
   ↳ The context menu is closed and the operational display appears.

Calling up the menu via the context menu

1. Open the context menu.
2. Press + to navigate to the desired menu.
3. Press E to confirm the selection.
   ↳ The selected menu opens.

8.3.5 Envelope curve on the display and operating module

In order to assess the measuring signal, the envelope curve and - if a mapping has been recorded - the mapping curve can be displayed:

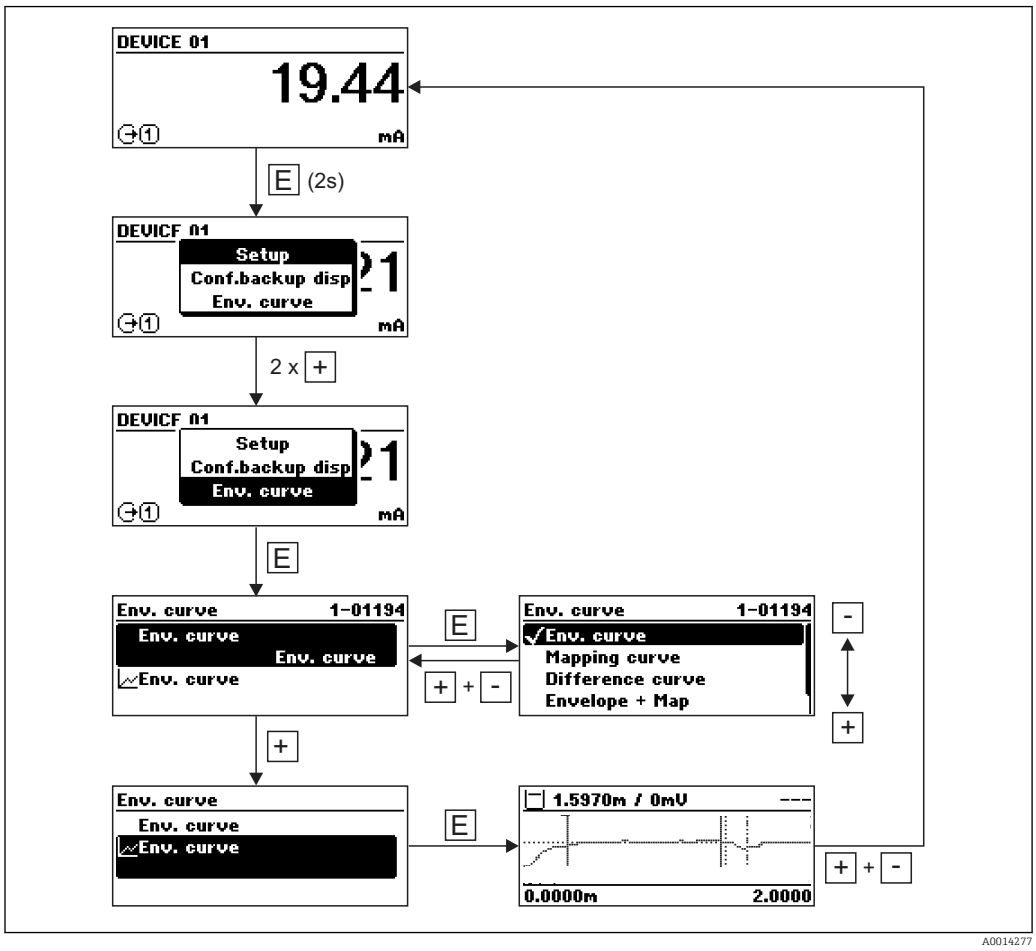

9 System integration via HART protocol

9.1 Overview of the Device Description files (DD)

Manufacturer ID	0x11
Device type	0x1128
HART specification	7.0
DD files	For information and files see: ▪ www.endress.com ▪ www.fieldcommgroup.org

9.2 Measured values via HART protocol

On delivery the following measruing values are assigned to the HART device varaibles:

Device variable	Measuring value
Primary variable (PV)	Level linearized
Secondary variable (SV)	Unfiltered distance
Tertiary variable (TV)	Absolute echo amplitude
Quaternary variable (QV)	Relative echo amplitude

The allocation of the device variables can be changed in the operating menu:
Expert → Communication → Output

In a HART multidrop loog only one device may use the output current for signal transmission. For all other devices the follwing must be set:
- **Current span (→ 157)** = **Fixed current**
- **Fixed current (→ 157)** = **4 mA**

10 Commissioning via SmartBlue (app)

10.1 Requirements

Device requirements
Commissioning via SmartBlue is only possible if the device has a Bluetooth module.

System requirements SmartBlue
SmartBlue is available as download for Android devices from the Google Play Store and for iOS devices from the iTunes Store.
- iOS devices:
  iPhone 4S or higher from iOS9.0; iPad2 or higher from iOS9.0; iPod Touch 5th generation or higher from iOS9.0
- Devices with Android:
  from Android 4.4 KitKat and *Bluetooth*® 4.0

Initial password
The ID of the Bluetooth module serves as the initial password used to establish the first connection to the device. It can be found:
- on the information sheet which is supplied with the device. This serial number specific sheet is also stored in W@M.
- on the nameplate of the Bluetooth module.

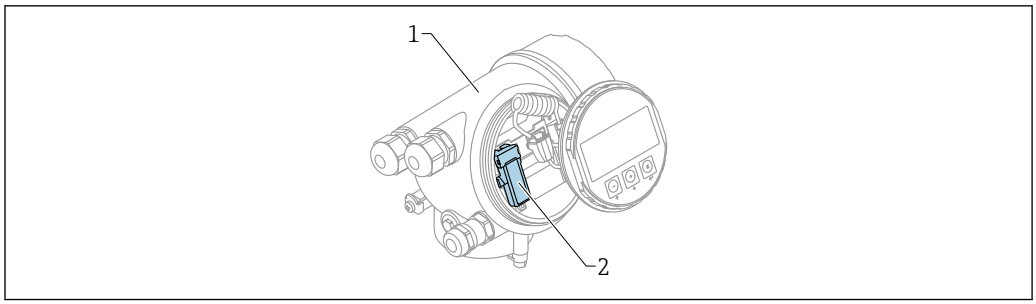

30 Device with Bluetooth module

1 Electronics housing of the device
2 Nameplate of the Bluetooth module; the ID on this nameplate serves as initial password.

All login data (including the password changed by the user) are not stored in the device but in the Bluetooth module. This must be taken into account when the module is removed from one device and inserted into a different device.

10.2 Commissioning

Download and install SmartBlue

1. To download the app, scan the QR code or enter "SmartBlue" in the search field



31 Download link

2. Start SmartBlue



A0029747

32 *SmartBlue pictogram*

3. Select device from displayed livelist (available devices only)

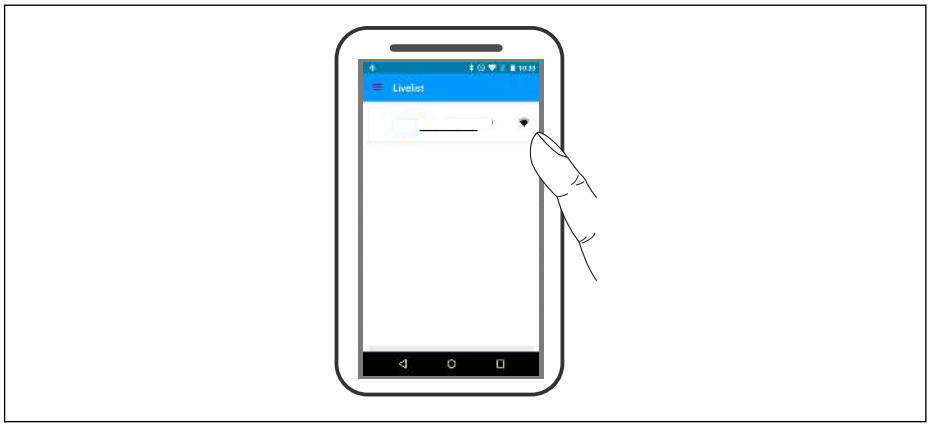

A0029502

33 *Livelist*

Only one point-to-point connection can be established between **one** sensor and **one** smartphone or tablet.

4. Perform login

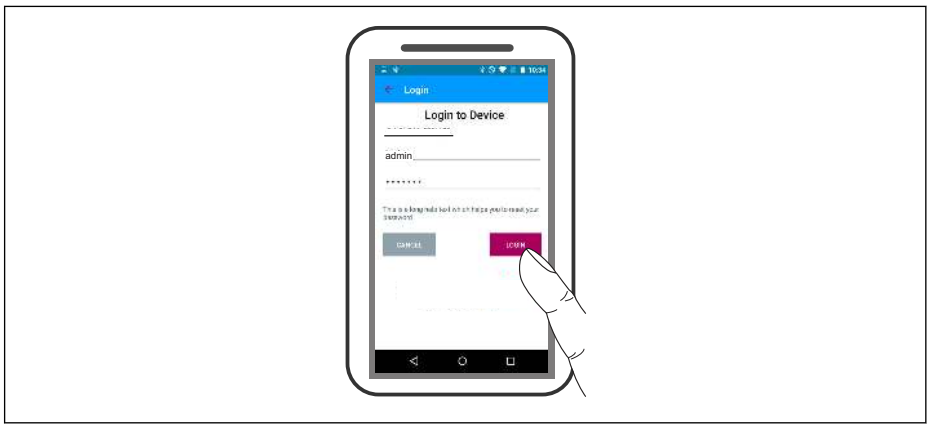

A0029503

34 *Login*

5. Enter user name -> admin
6. Enter initial password -> ID of the Bluetooth module
7. Change the password after logging in for the first time

8. By wiping from the side, additional information (e.g. main menu) can be dragged into the image

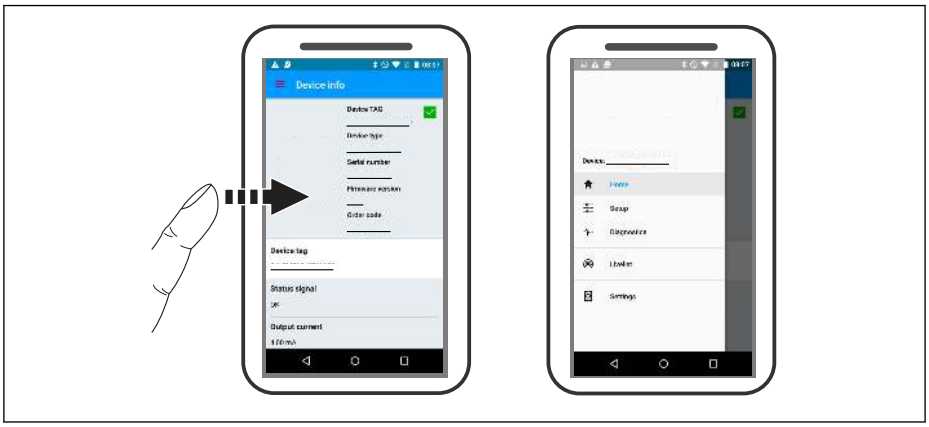

35 *Main menu*

Envelope curves can be displayed and recorded

Additionally to the envelope curve, the following values are displayed:

- D = Distance
- L = Level
- A = Absolute amplitude

- In the case of screenshots, the displayed section (zoom function) is saved
- In video sequences, always the whole area without zoom function is saved

It is also possible to send envelope curves (video sequences) using the relevant smartphone or tablet functions.



36 *Envelope curve display (example) in SmartBlue; Android view*

1 *Record video*
2 *Create screenshot*
3 *Navigation to mapping menu*
4 *Start / stop video recording*
5 *Move time on time axis*

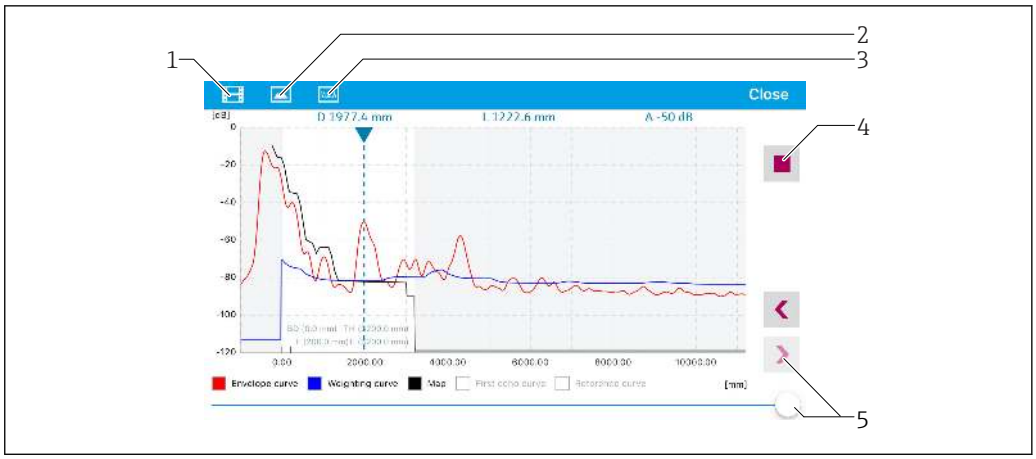

37 *Envelope curve display (example) in SmartBlue; IoS view*

1 *Record video*
2 *Create screenshot*
3 *Navigation to mapping menu*
4 *Start / stop video recording*
5 *Move time on time axis*

11 Commissioning via wizard

A wizard guiding the user through the initial setup is available in FieldCare and DeviceCare [5].

1. Connect the device to FieldCare or DeviceCare → 53.
2. Open the device in FieldCare or DeviceCare.
   ↳ The dashboard (home page) of the device appears:

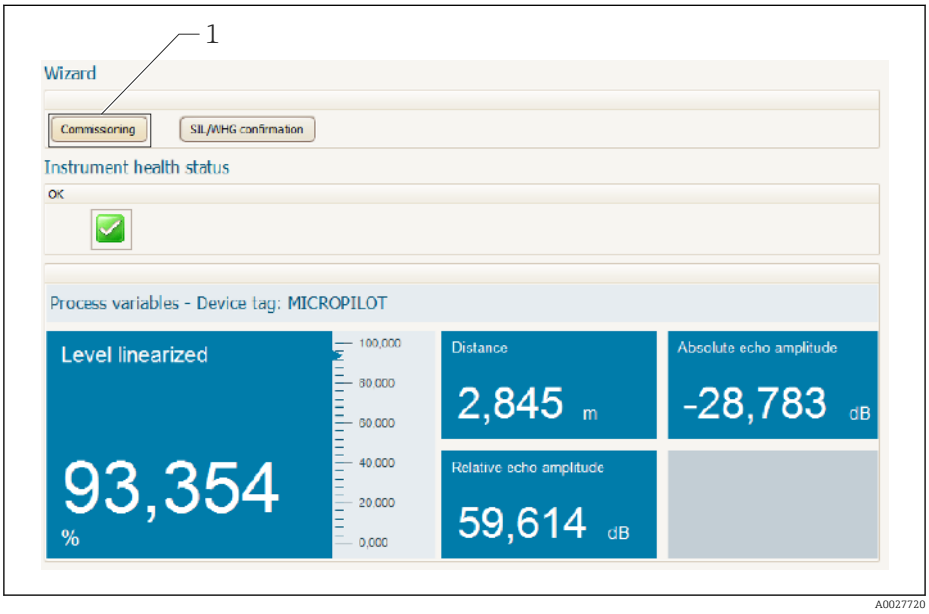

1 "Commissioning" button calls up the wizard.

3. Click on "Commissioning" to call up the wizard.
4. Enter or select the appropriate value for each parameter. These values are immediately written to the device.
5. Click "Next" to switch to the next page.
6. After finishing the last page, click "End of sequence" to close the wizard.

If the wizard is cancelled before all necessary parameters have been set, the device may be in an undefined state. A reset to the default settings is recommended in this case.

5) DeviceCare is available for download at www.software-products.endress.com. The download requires a registration in the Endress+Hauser software portal.

12 Commissioning via operating menu

12.1 Installation and function check

Make sure that all final checks have been completed before you start up your measuring point:

- Checklist "Post-installation check" → 35
- Checklist "Post-connection check" → 49

12.2 Setting the operating language

Factory setting: English or ordered local language

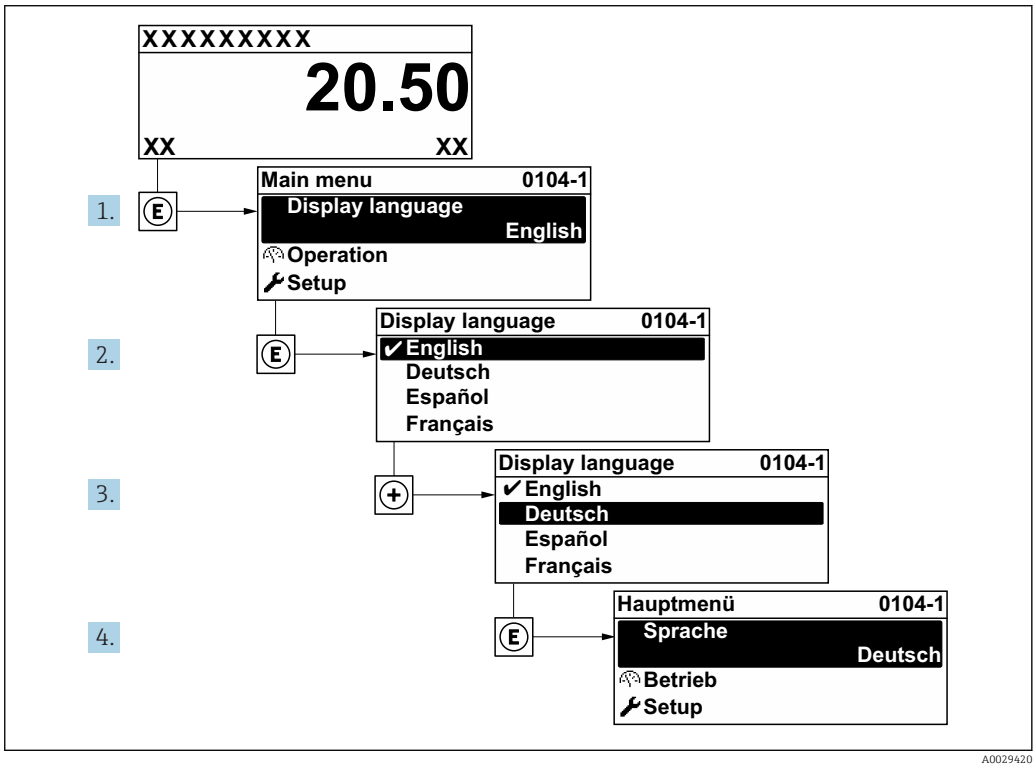

38 *Using the example of the local display*

12.3 Configuration of a level measurement

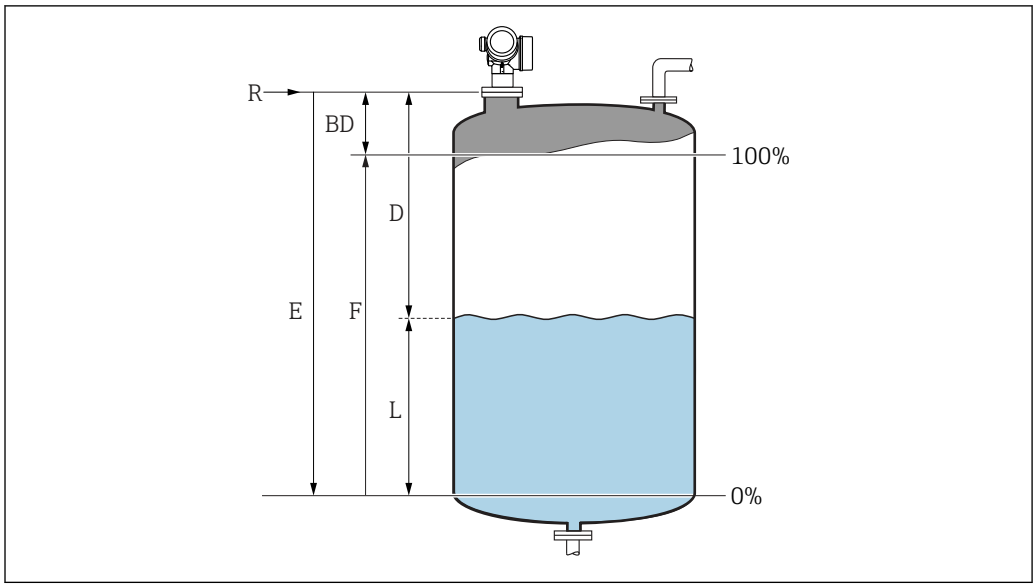

39 *Configuration parameters for level measurements in liquids*

R Reference point of the measurement
D Distance
L Level
E Empty calibration (= zero)
F Full calibration (= span)

1. Navigate to: Setup → Device tag
   ↳ Enter device tag.
2. Navigate to: Setup → Distance unit
   ↳ Select distance unit.
3. Navigate to: Setup → Tank type
   ↳ Select tank type.
4. For **Tank type** parameter = Bypass / pipe:
   Navigate to: Setup → Tube diameter
   ↳ Enter the diameter of the stilling well or bypass.
5. Navigate to: Setup → Medium group
   ↳ Specify medium group: (**Water based (DC >= 4)** or **Others**)
6. Navigate to: Setup → Empty calibration
   ↳ Enter empty distance E (Distance from reference point R to the 0% level) [6].
7. Navigate to: Setup → Full calibration
   ↳ Enter full distance F (Distance from the 0% to the 100% level).
8. Navigate to: Setup → Level
   ↳ Indicates the measrued level L.
9. Navigate to: Setup → Distance
   ↳ Indicates the measured distance from the reference point R to the level L.
10. Navigate to: Setup → Signal quality
    ↳ Indicates the quality of the evaluated level echo.

6) If, for example, the measuring range covers only an upper part of the tank (E << tank height), it is mandatory to enter the acutal tank height into the "Setup → Advanced Setup → Level → Tank/silo height" parameter.

11. When operating via local display:
    Navigate to: Setup → Mapping → Confirm distance
    ↳ Compare distance indicated on the display to real distance in order to start the recording of an interference echo map.
12. When operating via operating tool:
    Navigate to: Setup → Confirm distance
    ↳ Compare distance indicated on the display to real distance in order to start the recording of an interference echo map.
13. Navigate to: Setup → Advanced setup → Level → Level unit
    ↳ Select level unit: %, m, mm, ft, in (Factory setting: %)

The response time of the device is preset by the **Tank type** parameter (→ 123). More detailed settings are possible in the **Advanced setup** submenu.

12.4 Recording the reference curve

After the configuration of the measurement it is recommended to record the current envelope curve as a reference curve. The reference curve can be used later on in the process for diagnostic purposes. To record the reference curve use the **Save reference curve** parameter.

Navigation in the menu
Expert → Diagnostics → Envelope diagnostics → Save reference curve

Meaning of the options
- No
  No action
- Yes
  The current envelope curve is saved as reference curve.

In devices which have been delivered with software version 01.00.zz, this submenu is only visible for the "Service" user role.

The reference curve can only be displayed in the envelope curve diagram of FieldCare after it has been loaded from the device into FieldCare. This is performed by the "Load Reference Curve" function in FieldCare.



40 The "Load Reference Curve" function

12.5 Configuration of the on-site display

12.5.1 Factory settings of the on-site display

Parameter	Factory setting
Format display	1 value, max. size
Value 1 display	Level linearized
Value 2 display	None
Value 3 display	None
Value 4 display	None

12.5.2 Adjustment of the on-site display

The on-site display can be adjusted in the following submenu:
Setup → Advanced setup → Display

12.6 Configuration of the current outputs

12.6.1 Factory setting of the current outputs

Current output	Allocated measuring vlaue	4mA value	20mA value
1	Level linearized	0% or the corresponding linearized value	100% or the corresponding linearized value
2 [1)]	Distance	0	Empty calibration

1) for devices with 2 current outputs

12.6.2 Adjustment of the current outputs

The current outputs can be adjusted in the following menus:

Basic settings
Setup → Advanced setup → Current output 1 to 2

Advanced settings
Expert → Output 1 to 2 → Current output 1 to 2
See "Description of Device Parameters", GP01014F

12.7 Configuration management

After commissioning, you can save the current device configuration, copy it to another measuring point or restore the previous device configuration. You can do so using the **Configuration management** parameter and its options.

Navigation path in the operating menu
Setup → Advanced setup → Configuration backup display → Configuration management

Meaning of the options
- **Cancel**
  No action is executed and the user exits the parameter.
- **Execute backup**
  A backup copy of the current device configuration in the HistoROM (built-in in the device) is saved to the display module of the device. The backup copy comprises the transmitter and sensor data of the device.
- **Restore**
  The last backup copy of the device configuration is copied from the display module to the HistoROM of the device. The backup copy comprises the transmitter and sensor data of the device.
- **Duplicate**
  The transmitter configuration is duplicated to another device using the transmitter display module. The following parameters, which characterize the individual measuring point are **not** included in the transmitted configuration:
  – HART date code
  – HART short tag
  – HART message
  – HART descriptor
  – HART address
  – Device tag
  – Medium type
- **Compare**
  The device configuration saved in the display module is compared to the current device configuration of the HistoROM. The result of this comparison is displayed in the **Comparison result** parameter.
- **Clear backup data**
  The backup copy of the device configuration is deleted from the display module of the device.

While this action is in progress, the configuration cannot be edited via the local display and a message on the processing status appears on the display.

If an existing backup is restored to a different device using the **Restore** option, it may occur that some device functionalities are no longer available. In some cases even a device reset → 175 will not restore the original status..

In order to transmit a configuration to a different device, the **Duplicate** option should always be used.

12.8 Protection of the settings against unauthorized changes

There are two ways to protect the settings against unauthorized changes:

- Via parameter settings (software locking) → 56
- Via locking switch (hardware locking) → 57

13 Diagnostics and troubleshooting

13.1 General trouble shooting

13.1.1 General errors

Error	Possible cause	Remedial action
Device does not respond.	Supply voltage does not match the value indicated on the nameplate.	Connect the correct voltage.
	The polarity of the supply voltage is wrong.	Correct the polarity.
	The cables do not contact the terminals properly.	Ensure electrical contact between the cable and the terminal.
Values on the display invisible	Contrast setting is too weak or too strong.	▪ Increase contrast by pressing ⊞ and Ⓔ simultaneously. ▪ Decrease contrast by pressing ⊟ and Ⓔ simultaneously.
	The plug of the display cable is not connected correctly.	Connect the plug correctly.
	Display is defective.	Replace display.
"Communication error" is indicated on the display when starting the device or connecting the display	Electromagnetic interference	Check grounding of the device.
	Broken display cable or display plug.	Replace display.
Duplicating of the parameters from one device to another via the display doesn't work. Only the "Save" and "Abort" options are available.	Display with backup is not recognized if no data backup has been performed at the device before.	Connect display (with the backup) and restart the device.
Output current <3.6 mA	Signal cable connection incorrect.	Check connection.
	Electronics is defective.	Replace electronics.
HART communication does not function.	Communication resistor missing or incorrectly installed.	Install the communication resistor(250 Ω) correctly.
	Commubox connected incorrectly.	Connect Commubox correctly.
	Commubox not switched to HART mode.	Set the selection switch of the Commubox to the HART position.
CDI communication does not work.	Wrong setting of the COM port on the computer.	Check the setting of the COM port on the computer and change it if necessary.
Device measures incorrectly.	Parametrization error	Check and adjust parameterization.
Device not accessible via SmartBlue	No Bluetooth connection	Enable Bluetooth function onsmartphone or tablet.
	Device already linked to another smartphone / tablet	Disconnect device from smartphone/tablet.
	Bluetooth module not connected.	Connect Bluetooth module (see SD02252F).
Login via SmartBlue not possible	Device is being put into operation for the first time	Enter initial password (ID of the Bluetooth module) and change.
Device cannot be operated via SmartBlue	Incorrect password entered	Enter correct password
	Password forgotten	Contact Endress+Hauser Service (www.addresses.endress.com)

13.1.2 Error - SmartBlue operation

Error	Possible cause	Solution
Device is not visible in the live list	No Bluetooth connection	Enable Bluetooth® function on smartphone or tablet
		Bluetooth® function of sensor disabled, perform recovery sequence
Device is not visible in the live list	The device is already connected with another smartphone/ tablet	Only **one** point-to-point connection is established between a sensor and a smartphone or tablet
Device is visible in the live list but cannot be accessed via SmartBlue	Android end device	Is the location function enabled for the app, was it approved the first time?
		GPS or positioning function must be activated for certain Android versions in conjunction with Bluetooth®
		Activate GPS - close the app fully and restart - enable the positioning function for the app
Device is visible in the live list but cannot be accessed via SmartBlue	Apple end device	Log in as standard Enter user name "admin" Enter initial password (ID of the Bluetooth module) paying attention to lower/upper case
Login via SmartBlue not possible	Device is being put into operation for the first time	Enter initial password (ID of the Bluetooth module) and change; paying attention to lower/upper case
Device cannot be operated via SmartBlue	Incorrect password entered	Enter correct password
Device cannot be operated via SmartBlue	Password forgotten	Contact the Endress+Hauser Service department (www.addresses.endress.com)

13.1.3 Parametrization errors

Error	Possible cause	Remdy
Measured value incorrect	If measured distance (Setup → Distance) matches the real distance: Calibration error	▪ Check and adjust **Empty calibration** parameter (→ 125) if necessary. ▪ Check and adjust **Full calibration** parameter (→ 125) if necessary. ▪ Check and adjust linearization if necessary (**Linearization** submenu (→ 142)).
	For measurements in bypasses / stilling well: ▪ Wrong tank type ▪ Wrong tube diameter	▪ Select **Tank type (→ 123)** = **Bypass / pipe**. ▪ Enter correct diamter in **Tube diameter** parameter (→ 124).
	Wrong level correction	Enter correct value in **Level correction** parameter (→ 139).
	If measured distance (Setup → Distance) does not match the real distance: Interference echo	Carry out tank mapping (**Confirm distance** parameter (→ 127)).
No change of measured value on filling / emptying	Interference echo from installations, nozzle or build-up on the antenna.	▪ Carry out tank mapping (**Confirm distance** parameter (→ 127)). ▪ If necessary, clean antenna ▪ If necessary, selet better mopunting position

Error	Possible cause	Remdy
If the surface is not calm (e.g. filling, emptying, agitator running), the measured value jumps sporadically to a higher level	Signal is weakened by the rough surface - the interference echoes are sometimes stronger.	▪ Carry out tank mapping (**Confirm distance** parameter (→ 🖹 127)). ▪ Select **Tank type (→ 🖹 123)** = **Process vessel with agitator**. ▪ Increase integration time (Expert → Sensor → Distance → Integration time) ▪ Optimize orientation of the antenna ▪ If necessary, select a better mounting position and/or larger antenna.
During filling/emptying the measxured value jumps downwards	Multiple echoes	▪ Check **Tank type** parameter (→ 🖹 123). ▪ If possible, do not select central installation position. ▪ If appropriate, use a stilling well.
Error message F941 or S941 "Echo lost"	Level echo is too weak.	▪ Check **Medium group** parameter (→ 🖹 124). ▪ If necessary, select a more detailed setting in **Medium property** parameter (→ 🖹 135). ▪ Optimize alignment of antenna ▪ If necessary, select a better installation position and/or larger antenna.
	Level echo suppressed.	Delete mapping and record it again.
Device displays a level when the tank is empty.	Interference echo	Carry out mapping over entire measuring range when the tank is empty (**Confirm distance** parameter (→ 🖹 127)).
Wrong slope of the level in the entire measuring range	Wrong tank type selected.	Set **Tank type** parameter (→ 🖹 123) correctly.

13.2 Diagnostic information on local display

13.2.1 Diagnostic message

Faults detected by the self-monitoring system of the measuring device are displayed as a diagnostic message in alternation with the measured value display.

Measured value display in alarm condition	Diagnostic message

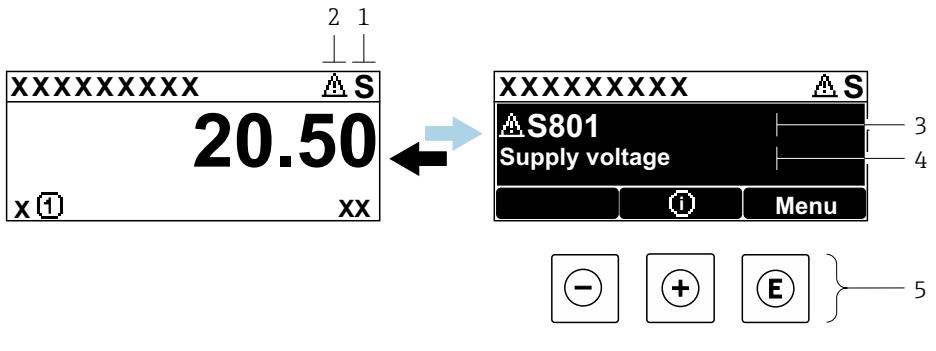

1 *Status signal*
2 *Status symbol (symbol for event level))*
3 *Status symbol with diagnostics event*
4 *Event text*
5 *Operating elements*

Status signals

F A0032902	**"Failure (F)" option** A device error is present. The measured value is no longer valid.
C A0032903	**"Function check (C)" option** The device is in service mode (e.g. during a simulation).
S A0032904	**"Out of specification (S)" option** The device is operated: ▪ Outside of its technical specifications (e.g. during startup or a cleaning) ▪ Outside of the configuration carried out by the user (e.g. level outside configured span)
M A0032905	**"Maintenance required (M)" option** Maintenance is required. The measured value is still valid.

Status symbol (symbol for event level)

⊗	**"Alarm" status** The measurement is interrupted. The signal outputs take on the defined alarm condition. A diagnostic message is generated.
⚠	**"Warning" status** The device continues to measure. A diagnostic message is generated.

Diagnostics event and event text

The fault can be identified using the diagnostics event. The event text helps you by providing information about the fault. In addition, the corresponding symbol is displayed before the diagnostics event.

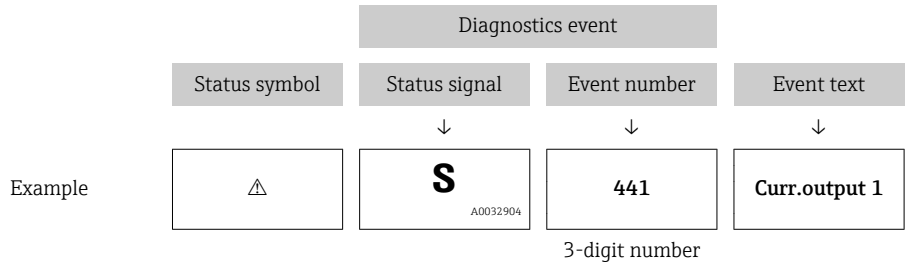

If two or more diagnostic messages are pending simultaneously, only the message with the highest priority is shown. Additional pending diagnostic messages can be shown in the **Diagnostic list** submenu.

Past diagnostic messages that are no longer pending are shown as follows:
- On the local display:
  in the **Event logbook** submenu
- In FieldCare:
  via the "Event List /HistoROM" function.

Operating elements

Operating functions in menu, submenu	
⊞	**Plus key** Opens the message about the remedial measures.
Ⓔ	**Enter key** Opens the operating menu.

13.2.2 Calling up remedial measures

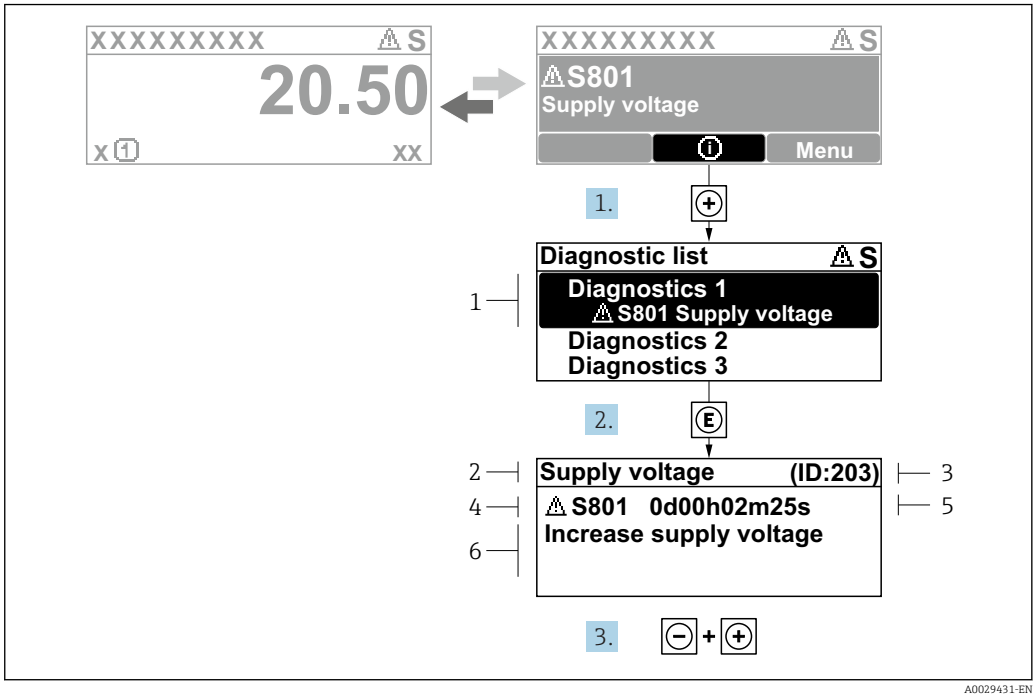

41 *Message for remedial measures*

1 *Diagnostic information*
2 *Short text*
3 *Service ID*
4 *Diagnostic behavior with diagnostic code*
5 *Operation time of occurrence*
6 *Remedial measures*

The user is in the diagnostic message.

1. Press ⊞ (ⓘ-Symbol).
   ↳ **Diagnostic list** submenu opens.
2. Select the desired diagnostic event with ⊞ or ⊟ and press Ⓔ.
   ↳ The message for the remedial measures for the selected diagnostic event opens.
3. Press ⊟ + ⊞ simultaneously.
   ↳ The message for the remedial measures closes.

The user is in the **Diagnostics** menu at an entry for a diagnostics event, e.g. in **Diagnostic list** submenu or in **Previous diagnostics**.

1. Press Ⓔ.
   ↳ The message for the remedial measures for the selected diagnostic event opens.
2. Press ⊟ + ⊞ simultaneously.
   ↳ The message for the remedial measures closes.

13.3 Diagnostic event in the operating tool

If a diagnostic event is present in the device, the status signal appears in the top left status in the operating tool along with the corresponding symbol for event level in accordance with NAMUR NE 107:

- Failure (F)
- Function check (C)
- Out of specification (S)
- Maintenance required (M)

A: Via the operating menu

1. Navigate to the **Diagnostics** menu.
   ↳ In the **Actual diagnostics** parameter, the diagnostic event is shown with event text.
2. On the right in the display range, hover the cursor over the **Actual diagnostics** parameter.
   ↳

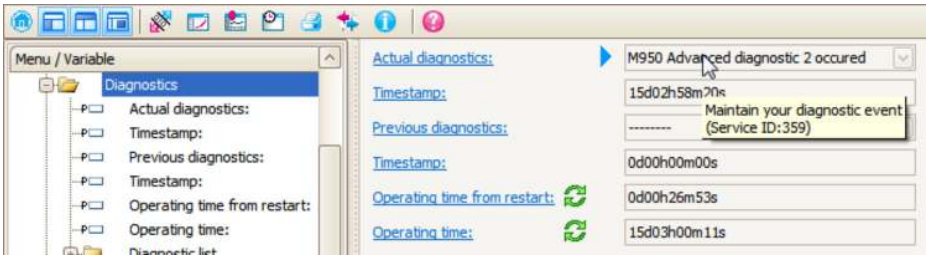

A tool tip with remedial measures for the diagnostic event appears.

B: Via the "Create documentation" function

1.

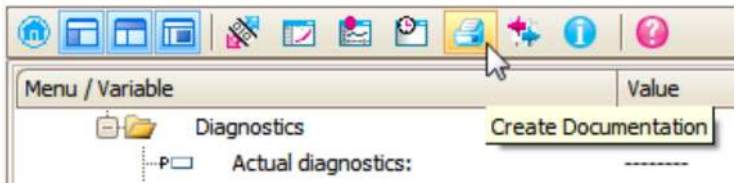

Select the "Create documentation" function.

2.

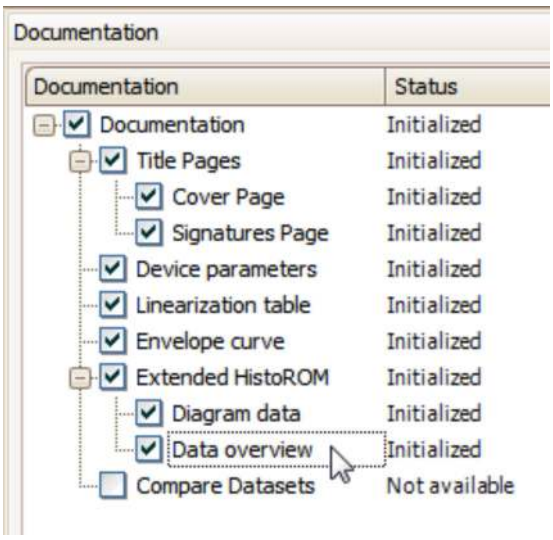

Make sure "Data overview" is marked.

3. Click "Save as ..." and save a PDF of the protocol.
   ↳ The protocol contains the diagnostic messages and remedy information.

C: Via the "Eventlist / Extended HistoROM" function

1. 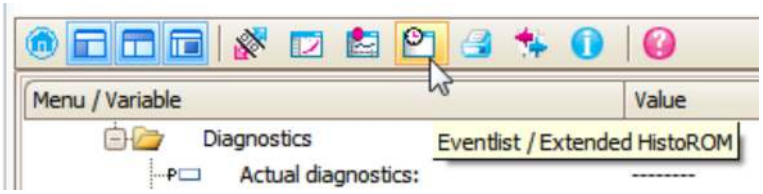

   Select the "Eventlist / Extended HistoROM" function.

2. 

   Select the "Load Eventlist" function.
   ↳ The list of events, including remedy information, is shown in the "Data overview" window.

13.4 Diagnostic list

In the **Diagnostic list** submenu submenu, up to 5 currently pending diagnostic messages can be displayed. If more than 5 messages are pending, the messages with the highest priority are shown on the display.

Navigation path
Diagnostics → Diagnostic list

Calling up and closing the remedial measures

1. Press ⓔ.
   ↳ The message for the remedial measures for the selected diagnostic event opens.
2. Press ⊟ + ⊞ simultaneously.
   ↳ The message about the remedial measures closes.

13.5 Overview of diagnostic events

Diagnostic number	Short text	Remedy instructions	Status signal [from the factory]	Diagnostic behavior [from the factory]
Diagnostic of electronic				
242	Software incompatible	1. Check software 2. Flash or change main electronics module	F	Alarm
252	Modules incompatible	1. Check if correct electronic modul is plugged 2. Replace electronic module	F	Alarm
261	Electronic modules	1. Restart device 2. Check electronic modules 3. Change I/O Modul or main electronics	F	Alarm
262	Module connection	1. Check module connections 2. Change electronic modules	F	Alarm
270	Main electronic failure	Change main electronic module	F	Alarm
271	Main electronic failure	1. Restart device 2. Change main electronic module	F	Alarm
272	Main electronic failure	1. Restart device 2. Contact service	F	Alarm
273	Main electronic failure	1. Emergency operation via display 2. Change main electronics	F	Alarm
275	I/O module defective	Change I/O module	F	Alarm
276	I/O module faulty	1. Restart device 2. Change I/O module	F	Alarm
276	I/O module faulty		F	Alarm
282	Data storage	1. Restart device 2. Contact service	F	Alarm
283	Memory content	1. Transfer data or reset device 2. Contact service	F	Alarm
311	Electronic failure	Maintenance required! 1. Do not perform reset 2. Contact service	M	Warning
Diagnostic of configuration				
410	Data transfer	1. Check connection 2. Retry data transfer	F	Alarm
411	Up-/download active	Up-/download active, please wait	C	Warning
412	Processing download	Download active, please wait	C	Warning
431	Trim 1 to 2	Carry out trim	C	Warning
435	Linearization	Check linearization table	F	Alarm
437	Configuration incompatible	1. Restart device 2. Contact service	F	Alarm
438	Dataset	1. Check data set file 2. Check device configuration 3. Up- and download new configuration	M	Warning
441	Current output 1 to 2	1. Check process 2. Check current output settings	S	Warning
484	Failure mode simulation	Deactivate simulation	C	Alarm

Diagnostic number	Short text	Remedy instructions	Status signal [from the factory]	Diagnostic behavior [from the factory]
485	Simulation measured value	Deactivate simulation	C	Warning
491	Current output 1 to 2 simulation	Deactivate simulation	C	Warning
494	Switch output simulation	Deactivate simulation switch output	C	Warning
495	Diagnostic event simulation	Deactivate simulation	C	Warning
585	Simulation distance	Deactivate simulation	C	Warning
586	Record map	Recording of mapping please wait	C	Warning
Diagnostic of process				
801	Energy too low	Increase supply voltage	S	Warning
803	Current loop	1. Check wiring 2. Change I/O module	F	Alarm
825	Operating temperature	1. Check ambient temperature 2. Check process temperature	S	Warning
825	Operating temperature		F	Alarm
921	Change of reference	1. Check reference configuration 2. Check pressure 3. Check sensor	S	Warning
941	Echo lost	Check parameter 'DC value'	F	Alarm [1]
942	In safety distance	1. Check level 2. Check safety distance 3. Reset self holding	S	Alarm [1]
943	In blocking distance	Reduced accuracy Check level	S	Warning
950	Advanced diagnostic 1 to 2 occured	Maintain your diagnostic event	M	Warning [1]

1) Diagnostic behavior can be changed.

13.6 Event logbook

13.6.1 Event history

A chronological overview of the event messages that have occurred is provided in the **Event list** submenu [7].

Navigation path
Diagnostics → Event logbook → Event list

A maximum of 100 event messages can be displayed in chronological order.

Die Ereignishistorie umfasst Einträge zu:
- Diagnostic events
- Information events

7) This submenu is only available for operation via local display. In the case of operation via FieldCare, the event list can be displayed with the "Event List / HistoROM" functionality of FieldCare.

In addition to the operation time of its occurrence, each event is also assigned a symbol that indicates whether the event has occurred or is ended:
- Diagnostic event
  - ⊕: Event has occurred
  - ⊖: Event has ended
- Information event
  ⊕: Event has occurred

Calling up and closing the remedial measures

1. Press E
   ↳ The message for the remedial measures for the selected diagnostic event opens.
2. Press − + + simultaneously.
   ↳ The message about the remedial measures closes.

13.6.2 Filtering the event logbook

Using the **Filter options** parameter, you can define which category of event messages is displayed in the **Event list** submenu.

Navigation path
Diagnostics → Event logbook → Filter options

Filter categories
- All
- Failure (F)
- Function check (C)
- Out of specification (S)
- Maintenance required (M)
- Information

13.6.3 Overview of information events

Info number	Info name
I1000	--------(Device ok)
I1089	Power on
I1090	Configuration reset
I1091	Configuration changed
I1092	HistoROM backup deleted
I1110	Write protection switch changed
I1137	Electronic changed
I1151	History reset
I1154	Reset terminal voltage min/max
I1155	Reset electronic temperature
I1156	Memory error trend
I1157	Memory error event list
I1184	Display connected
I1185	Display backup done
I1186	Restore via display done
I1187	Settings downloaded with display
I1188	Display data cleared

Info number	Info name
I1189	Backup compared
I1256	Display: access status changed
I1264	Safety sequence aborted
I1335	Firmware changed
I1397	Fieldbus: access status changed
I1398	CDI: access status changed
I1512	Download started
I1513	Download finished
I1514	Upload started
I1515	Upload finished
I1554	Safety sequence started
I1555	Safety sequence confirmed
I1556	Safety mode off

13.7 Firmware history

Date	Firmware version	Modifications	Documentation (FMR53/FMR54, HART)		
			Operating Instructions	Description of Parameters	Technical Information
12.2012	01.00.zz	Original software	BA01050F/00/EN/01.12	GP01014F/00/EN/01.12	TI01041F/00/EN/01.12
02.2015	01.01.zz	▪ additional languages ▪ HistoROM functionality enhanced ▪ Improvements and bugfixes	BA01050F/00/EN/03.14	GP01014F/00/EN/04.14	TI01041F/00/EN/05.14
04.2016	01.02.zz	Update to HART 7	BA01050F/00/EN/04.16 BA01050F/00/EN/05.16 [1] BA01050F/00/EN/07.18 [2]	GP01014F/00/EN/05.16	TI01041F/00/EN/06.16 TI01041F/00/EN/07.16 [1] TI01041F/00/EN/09.18 [2]

1) Contains information on the Heartbeat wizards which are available in the latest DTM version for DeviceCare and FieldCare.
2) Contains information on the Bluetooth interface.

The firmware version can explicitly be ordered via the product structure. In this way it is possible to ensure compatibility of the firmware version with an existing or planned system integration.

14 Maintenance

The measuring device requires no special maintenance.

14.1 Exterior cleaning

When exterior-cleaning the device, always use cleaning agents that do not attack the surface of the hosuing and the seals.

14.2 Replacing seals

The process seals of the sensors (at the process connection) must be replaced periodically, particularly if molded seals (aseptic construction) are used. The period between changes depends on the frequency of cleaning cycles and on the temperature of the measured substance and the cleaning temperature.

15 Repairs

15.1 General information on repairs

15.1.1 Repair concept

The Endress+Hauser repair concept assumes that the devices have a modular design and that repairs can be done by the Endress+Hauser service or specially trained customers.

Spare parts are contained in suitable kits. They contain the related replacement instructions.

For more information on service and spare parts, contact the Service Department at Endress+Hauser.

15.1.2 Repairs to Ex-approved devices

When carrying out repairs to Ex-approved devices, please note the following:

- Repairs to Ex-approved devices may only be carried out by trained personnel or by the Endress+Hauser Service.
- Comply with the prevailing standards, national Ex-area regulations, safety instructions (XA) and certificates.
- Only use original spare parts from Endress+Hauser.
- When ordering a spare part, please note the device designation on the nameplate. Only replace parts with identical parts.
- Carry out repairs according to the instructions. On completion of repairs, carry out the specified routine test on the device.
- Only Endress+Hauser Service may convert a certified device into a different certified variant.
- Document all repair work and conversions.

15.1.3 Replacement of an electronics module

If an electronics module has been replaced, it is not necessary to perform a new basic setup as the calibration parameters are stored in the HistoROM which is located in the housing. However, after exchanging the main electronics module it may be necessary to record a new mapping (interference echo suppression).

15.1.4 Replacement of a device

After a complete device or electronic module has been replaced, the parameters can be downloaded into the instrument again in one of the following ways:

- Via the display module
  Condition: The configuration of the old device has been saved in the display module → 172.
- Via FieldCare
  Condition: The configuration of the old device has been saved to the computer via FieldCare.

You can continue to measure without carrying out a new setup. Only a linearization and a tank map (interference echo suppression) have to be recorded again.

15.2 Spare parts

- A few interchangeable measuring device components are identified by a spare part nameplate. This contains information about the spare part.
- The connection compartment cover of the device contains a spare part nameplate that includes the following information:
  - A list of the most important spare parts for the measuring device, including their ordering information.
  - The URL for the *W@M Device Viewer* (www.endress.com/deviceviewer): There, all spare parts for the measuring device are listed, including the order code, and can be ordered. If available, the corresponding Installation Instructions can also be downloaded there.

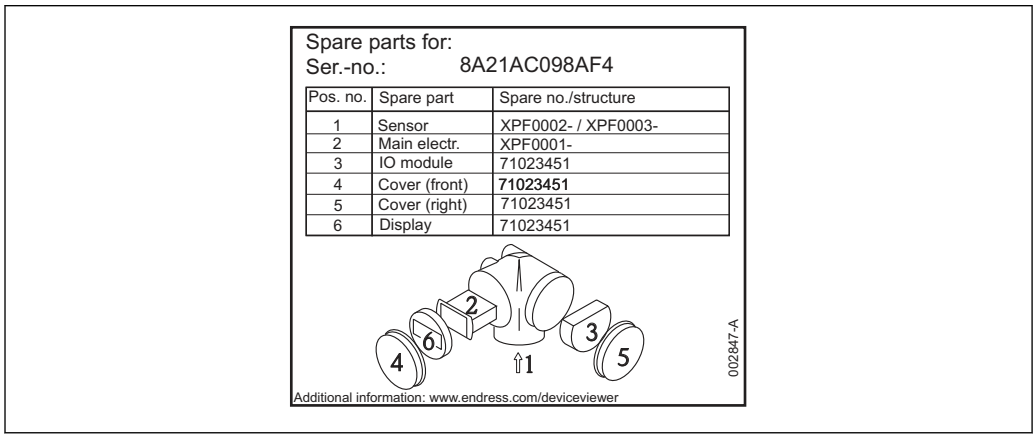

42 Example for spare part nameplate in connection compartment cover

Measuring device serial number:
- Is located on the device and spare part nameplate.
- Can be read out via the "Serial number" parameter in the "Device information" submenu.

15.3 Return

The measuring device must be returned if it is need of repair or a factory calibration, or if the wrong measuring device has been delivered or ordered. Legal specifications require Endress+Hauser, as an ISO-certified company, to follow certain procedures when handling products that are in contact with the medium.

To ensure safe, swift and professional device returns, please refer to the procedure and conditions for returning devices provided on the Endress+Hauser website at http://www.endress.com/support/return-material

15.4 Disposal

Observe the following notes during disposal:
- Observe valid federal/national regulations.
- Ensure proper separation and reuse of the device components.

16 Accessories

16.1 Device-specific accessories

16.1.1 Weather protection cover

Accessory	Description
Weather protection cover	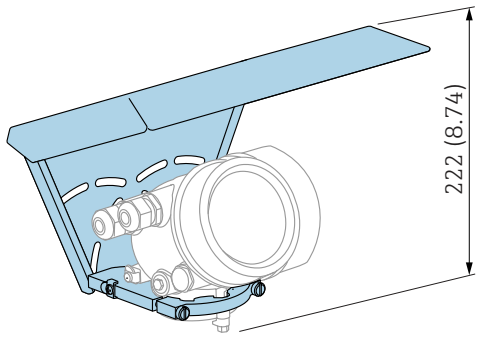 A0015466 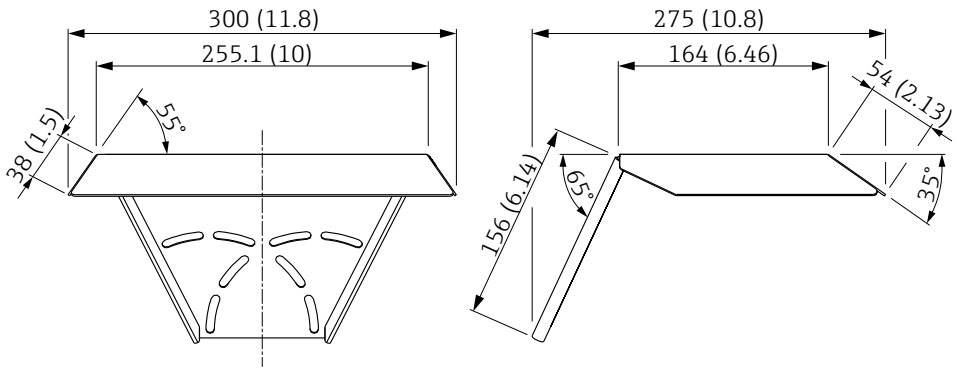 A0015472 43 *Weather protection cover; Dimensions: mm (in)* The weather protection cover can be ordered together with the device (product structure, feature 620 "Accessory Enclosed", option PB "Weather Protection Cover"). Alternatively, it can be separately ordered as an accessory; order code 71162242.

16.1.2 Antenna extension FAR10 (for FMR54)

Accessory	Description
Antenna extension FAR10 (for FMR54)	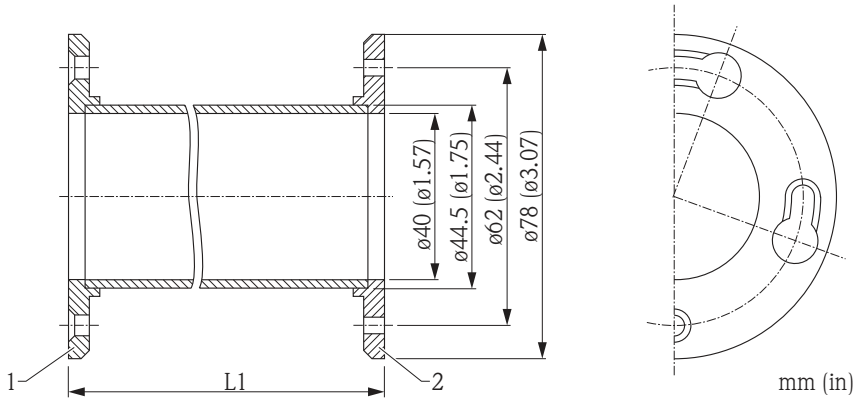 A0018879 *1 Instrument connection* *2 Horn connection* **Material:** ▪ 316L (1.4404) ▪ Alloy B2 ▪ Alloy C4 **Length L1:** ▪ 100 mm (4 in) ▪ 200 mm (8 in) ▪ 300 mm (12 in) ▪ 400 mm (16 in) Detailed ordering information is available from the following sources: ▪ In the Product Configurator on the Endress+Hauser website: www.endress.com → Select country → Instruments → Select device → Product page function: Configure this product ▪ From your Endress+Hauser Sales Center: www.endress.com/worldwide

16.1.3 Remote display FHX50

Accessories	Description
Remote display FHX50	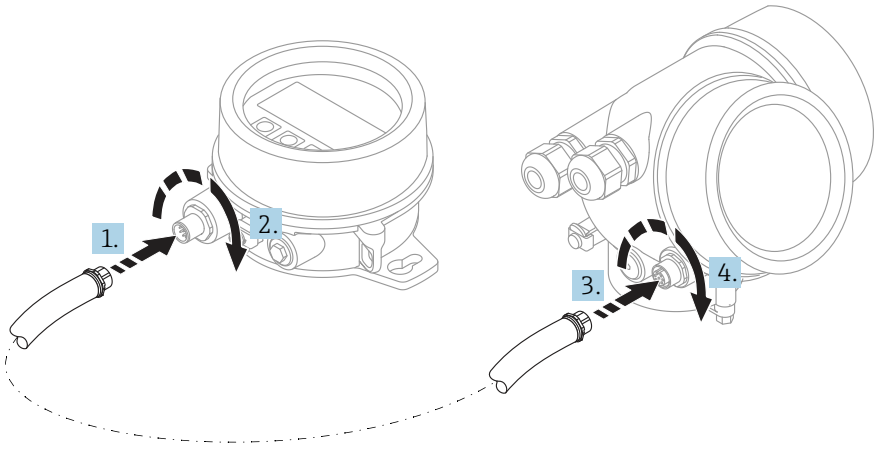 A0019128 ▪ Material: – Plastic PBT – 316L/1.4404 – Aluminum ▪ Degree of protection: IP68 / NEMA 6P and IP66 / NEMA 4x ▪ Suitable for display modules: – SD02 (push buttons) – SD03 (touch control) ▪ Connecting cable: – Cable supplied with device up to 30 m (98 ft) – Standard cable supplied by customer up to 60 m (196 ft) ▪ Ambient temperature range: −40 to 80 °C (−40 to 176 °F) ▪ Ambient temperature range (option): −50 to 80 °C (−58 to 176 °F) [1] ▪ If the remote display should be used, order the device version "Prepared for display FHX50" (feature 030, version L, M or N). For the FHX50, you must select option A: "Prepared for display FHX50" under feature 050 "Measuring device version". ▪ If the device version "Prepared for display FHX50" was not originally ordered and a FHX50 display is to be retrofitted, you must select version B "Not prepared for display FHX50" under feature 050: "Measuring device version" when ordering the FHX50. In this case, a retrofit kit for the device is supplied with the FHX50. The kit can be used to prepare the device so that the FHX50 can be used. Use of the FHX50 may be restricted for transmitters with an approval. A device can only be retrofitted with the FHX50 if the option L, M or N ("Prepared for FHX50") is listed under *Basic specifications*, item 4 "Display, operation" in the Safety Instructions (XA) for the device. Also pay attention to the Safety Instructions (XA) of the FHX50. Retrofitting is not possible on transmitters with: ▪ An approval for use in areas with flammable dust (dust ignition-proof approval) ▪ Ex nA type of protection For details, see document SD01007F.

1) This range is valid if option JN "Ambient temperature transmitter −50 °C (−58 °F)" has been selected in ordering feature 580 "Test, Certificate". If the temperature is permanently below −40 °C (−40 °F), failure rates may be increased.

16.1.4 Overvoltage protection

Accessory	Description
Overvoltage protection for 2-wire-devices OVP10 (1 channel) OVP20 (2 channel)	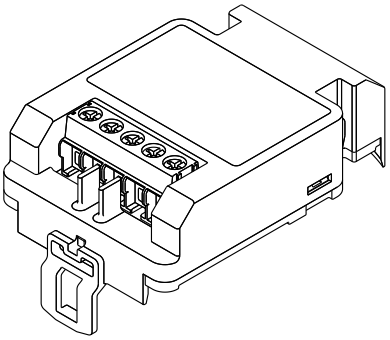 A0021734 **Technical data** ▪ Resistance per channel: 2 * 0.5 Ω_{max} ▪ Threshold DC voltage: 400 to 700 V ▪ Threshold impulse voltage: < 800 V ▪ Capacitance at 1 MHz: < 1.5 pF ▪ Nominal arrest impulse voltage (8/20 µs): 10 kA ▪ Suited for wire cross-sections: 0.2 to 2.5 mm² (24 to 14 AWG) **Ordering with device** The overvoltage protection module is preferably ordered with the device. See product structure, feature 610 "Accessory mounted", option NA "Overvoltage protection". Separate ordering of the module is only necessary if a device is to retrofitted with the overvoltage protection. **Order code for retrofitting** ▪ For 1-channel devices (feature 020, option A) OVP10: 71128617 ▪ For 2-channel devices (feature 020, option B, C, E or G) OVP20 : 71128619 **Hosuing lid for retrofitting** In order to keep the necessary safety distances, the housing lid needs to be replaced if the device is retrofitted with the overvoltage protection. Depending on the housing type, the order code of the suitable lid is as follows: ▪ GT18 housing: Lid 71185516 ▪ GT19 housing: Lid 71185518 ▪ GT20 housing: Lid 71185516 **Restrictions for retrofitting** Depending on the approval of the transmitter the usage of the OVP module may be restricted. A device may only be retrofitted with an OVP module if the option *NA* (overvoltage protection) is quoted unter *Optional Specifications* in the Safety Instructions (XA) pertaining to the device. For details refer to SD01090F.

16.1.5 Gas-tight feedthrough

Accessory	Description
Gas-tight feedthrough	Chemically inert glass feedthrough; prevents migration of gases into the electronics housing. To be ordered with the device: product structure, feature 610 "Accessory Mounted", option NC "Gas-tight feedthrough"

16.1.6 Bluetooth module for HART devices

Accessory	Description
Bluetooth module	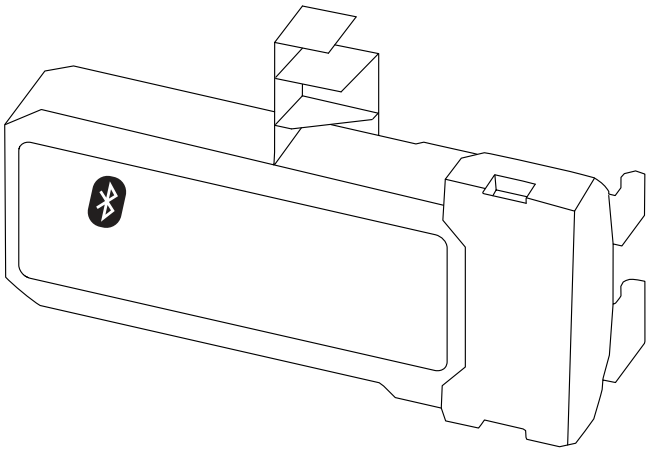 A0036493 ▪ Quick and easy commissioning via SmartBlue (app) ▪ No additional tools or adapters required ▪ Signal curve via SmartBlue (app) ▪ Encrypted single point-to-point data transmission (tested by Fraunhofer institue) and password protected communication via Bluetooth® wireless technology ▪ Range under reference conditions: > 10 m (33 ft) When using the Bluetooth module the minimum supply voltage increases by up to 3 V. **Ordering with device** The Bluetooth module is preferably ordered with the device. See product structure, feature 610 "Accessory Mounted", option NF "Bluetooth". A separate order is only necessary in case of retrofitting. **Order code for retrofitting** Bluetooth module (BT10): 71377355 **Restrictions in case of retrofitting** Depending on the approval of the transmitter, application of the Bluetooth module may be restricted. A device may only be retrofitted with a Bluetooth module if the option *NF* (Bluetooth) is listed in the associated Safety Instructions (XA) under *Optional specifications*. For details refer to SD02252F.

16.2 Communication-specific accessories

Accessory	Description
Commubox FXA195 HART	For intrinsically safe HART communication with FieldCare via the USB interface. For details refer to Technical Information TI00404F

Accessory	Description
Commubox FXA291	Connects Endress+Hauser field devices with CDI interface (= Endress+Hauser Common Data Interface) to the USB interface of a computer. Order code: 51516983 For details refer to Technical Information TI00405C

Accessory	Description
HART Loop Converter HMX50	Evaluates the dynamic HART variables and converts them to analog current signals or limit values. Order code: 71063562 For details refer to Technical Information TI00429F and Operating Instructions BA00371F

Accessory	Description
WirelessHART Adapter SWA70	Connects field devices to a WirelessHART network. The WirelessHART adapter can be mounted directly at a HART device and is easly integrated into an existing HART network. It ensures safe data transmission and can be operated in parallel with other wireless networks. For details refer to Operating Instructions BA00061S

Accessories	Description
Connect Sensor FXA30/FXA30B	Fully integrated, battery-powered gateway for simple applications with SupplyCare Hosting. Up to 4 field devices with 4 to 20 mA communication (FXA30/FXA30B), serial Modbus (FXA30B) or HART (FXA30B) can be connected. With its robust design and ability to run for years on the battery, it is ideal for remote monitoring in isolated locations. Version with LTE (USA, Canada and Mexico only) or 3G mobile transmission for worldwide communication. For details, see "Technical Information" TI01356S and Operating Instructions BA01710S.

Accessories	Description
Fieldgate FXA42	Fieldgates enable communication between connected 4 to 20 mA, Modbus RS485 and Modbus TCP devices and SupplyCare Hosting or SupplyCare Enterprise. The signals are transmitted either via Ethernet TCP/IP, WLAN or mobile communications (UMTS). Advanced automation capabilities are available, such as an integrated Web-PLC, OpenVPN and other functions. For details, see "Technical Information" TI01297S and Operating Instructions BA01778S.

Accessories	Description
SupplyCare Enterprise SCE30B	Inventory management software that visualizes levels, volumes, masses, temperatures, pressures, densities or other tank parameters. The parameters are recorded and transmitted by means of gateways of the type Fieldgate FXA42. This Web-based software is installed on a local server and can also be visualized and operated with mobile terminals such as a smartphone or tablet. For details, see "Technical Information" TI01228S and Operating Instructions BA00055S

Accessories	Description
SupplyCare Hosting SCH30	Inventory management software that visualizes levels, volumes, masses, temperatures, pressures, densities or other tank parameters. The parameters are recorded and transmitted by means of gateways of the type Fieldgate FXA42, FXA30 and FXA30B. SupplyCare Hosting is offered as a hosting service (Software as a Service, SaaS). In the Endress+Hauser portal, the user is provided with the data over the Internet. For details, see "Technical Information" TI01229S and Operating Instructions BA00050S.

Accessory	Description
Field Xpert SFX350	Field Xpert SFX350 is a mobile computer for commissioning and maintenance. It enables efficient device configuration and diagnostics for HART and FOUNDATION fieldbus devices in the **non-Ex area**. For details, see Operating Instructions BA01202S

Accessory	Description
Field Xpert SFX370	Field Xpert SFX370 is a mobile computer for commissioning and maintenance. It enables efficient device configuration and diagnostics for HART and FOUNDATION fieldbus devices in the **non-Ex area** and the **Ex area**. For details, see Operating Instructions BA01202S

16.3 Service-specific accessories

Accessory	Description
DeviceCare SFE100	Configuration tool for HART, PROFIBUS and FOUNDATION Fieldbus devices Technical Information TI01134S ▪ DeviceCare is available for download at www.software-products.endress.com. The download requires a registration in the Endress+Hauser software portal. ▪ Alternatively, a DeviceCare DVD can be ordered with the device. Product structure: Feature 570 "Service", Option IV "Tooling DVD (DeviceCare Setup)".
FieldCare SFE500	FDT-based Plant Asset Management tool. Helps to configure and maintain all field devices of your plant. By supplying status information it also supports the diagnosis of the devices. Technical Information TI00028S

16.4 System components

Accessory	Description
Graphic Data Manager Memograph M	The graphic data manager Memograph M provides information on all the relevant process variables. Measured values are recorded correctly, limit values are monitored and measuring points analyzed. The data are stored in the 256 MB internal memory and also on an SD card or USB stick. For details refer to Technical Information TI00133R and Operating Instructions BA00247R
RN221N	Active barrier with power supply for safe separation of 4 to 20 mA current circuits. Provides bi-directional HART transmission. For details refer to Technical Information TI00073R and Operating Instructions BA00202R
RNS221	Transmitter supply for 2-wire sensors or transmitters exclusively for non-Ex areas. Provides bi-directional communication using the HART communication sockets. For details refer to Technical Information TI00081R and Operating Instructions KA00110R

17 Operating menu

17.1 Overview of the operating menu (SmartBlue)

Navigation SmartBlue

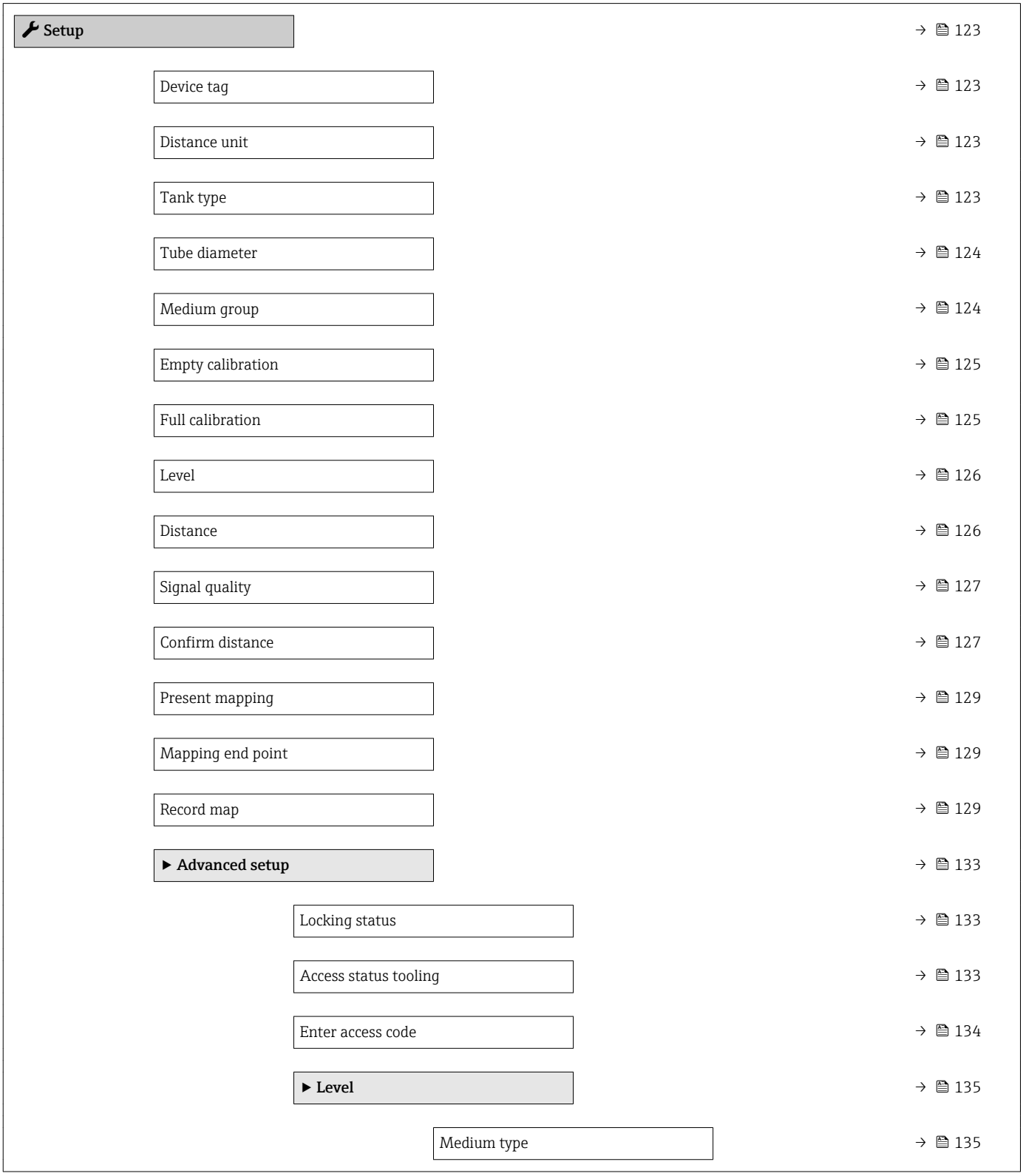

Medium property	→ 135
Max. filling speed liquid	→ 136
Max. draining speed liquid	→ 136
Advanced process conditions	→ 137
Level unit	→ 138
Blocking distance	→ 138
Level correction	→ 139
Tank/silo height	→ 139
▶ **Linearization**	→ 142
Linearization type	→ 144
Unit after linearization	→ 145
Free text	→ 146
Level linearized	→ 146
Maximum value	→ 147
Diameter	→ 147
Intermediate height	→ 147
Table mode	→ 148
Table number	→ 149
Level	→ 149
Level	→ 150
Customer value	→ 150
Activate table	→ 150
▶ **Safety settings**	→ 151
Output echo lost	→ 151
Value echo lost	→ 151

- Ramp at echo lost → 152
- Blocking distance → 138
- ▶ **Current output 1 to 2** → 156
  - Assign current output → 156
  - Current span → 157
  - Fixed current → 157
  - Damping output → 158
  - Failure mode → 158
  - Failure current → 159
  - Output current 1 to 2 → 159
- ▶ **Switch output** → 160
  - Switch output function → 160
  - Assign status → 161
  - Assign limit → 161
  - Assign diagnostic behavior → 161
  - Switch-on value → 162
  - Switch-on delay → 163
  - Switch-off value → 163
  - Switch-off delay → 164
  - Failure mode → 164
  - Switch status → 164
  - Invert output signal → 164

Diagnostics → 178

- Actual diagnostics → 178
- Timestamp → 178

- Previous diagnostics → 178
- Timestamp → 179
- Operating time from restart → 179
- Operating time → 172
- **▶ Diagnostic list** → 180
  - Diagnostics 1 to 5 → 180
  - Timestamp 1 to 5 → 180
- **▶ Device information** → 182
  - Device tag → 182
  - Serial number → 182
  - Firmware version → 182
  - Device name → 182
  - Order code → 183
  - Extended order code 1 to 3 → 183
  - Device revision → 183
  - Device ID → 183
  - Device type → 184
  - Manufacturer ID → 184
- **▶ Measured values** → 185
  - Distance → 126
  - Level linearized → 146
  - Output current 1 to 2 → 159
  - Measured current 1 → 186

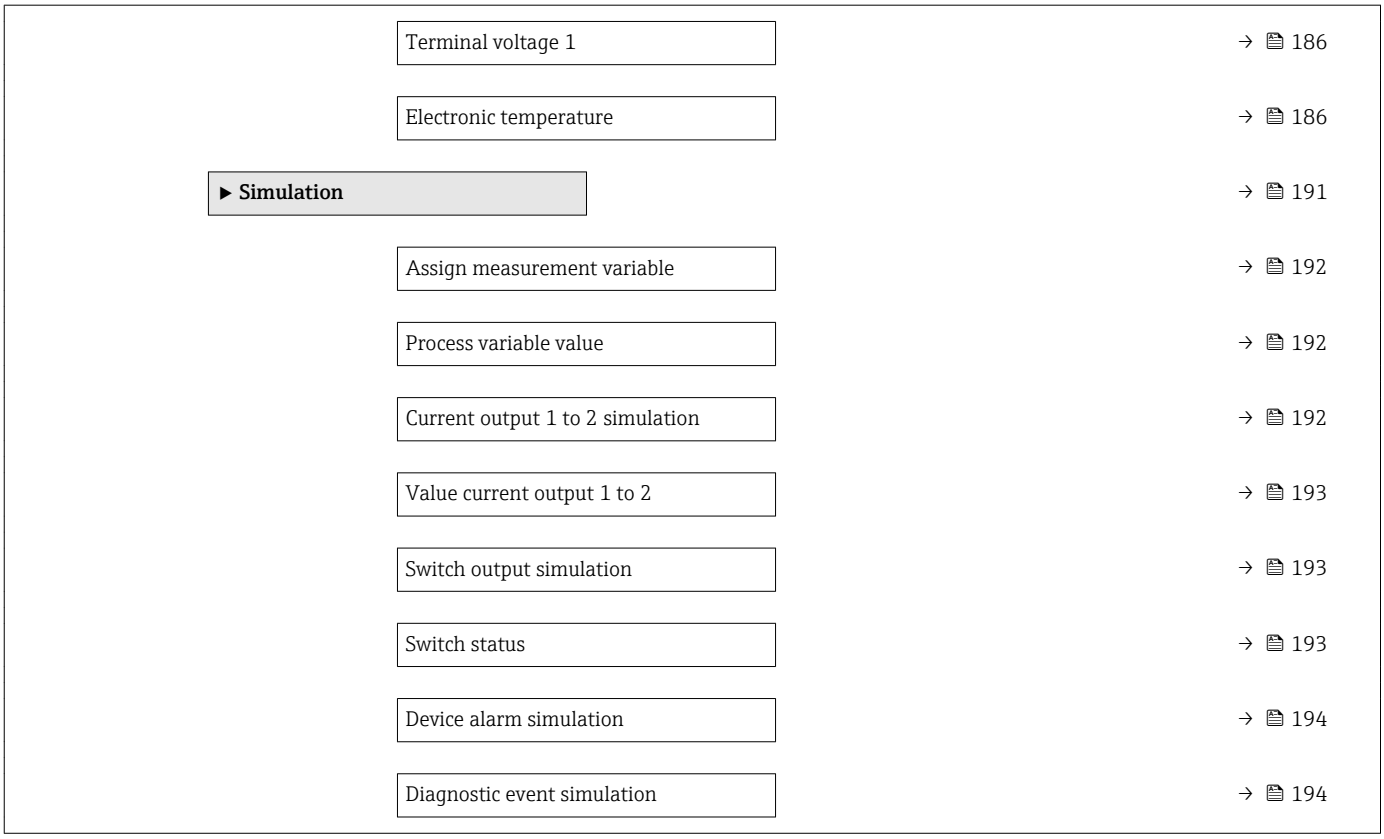
Terminal voltage 1
→ 186
Electronic temperature
→ 186
▶ Simulation
→ 191
Assign measurement variable
→ 192
Process variable value
→ 192
Current output 1 to 2 simulation
→ 192
Value current output 1 to 2
→ 193
Switch output simulation
→ 193
Switch status
→ 193
Device alarm simulation
→ 194
Diagnostic event simulation
→ 194

17.2 Overview of the operating menu (display module)

Navigation Operating menu

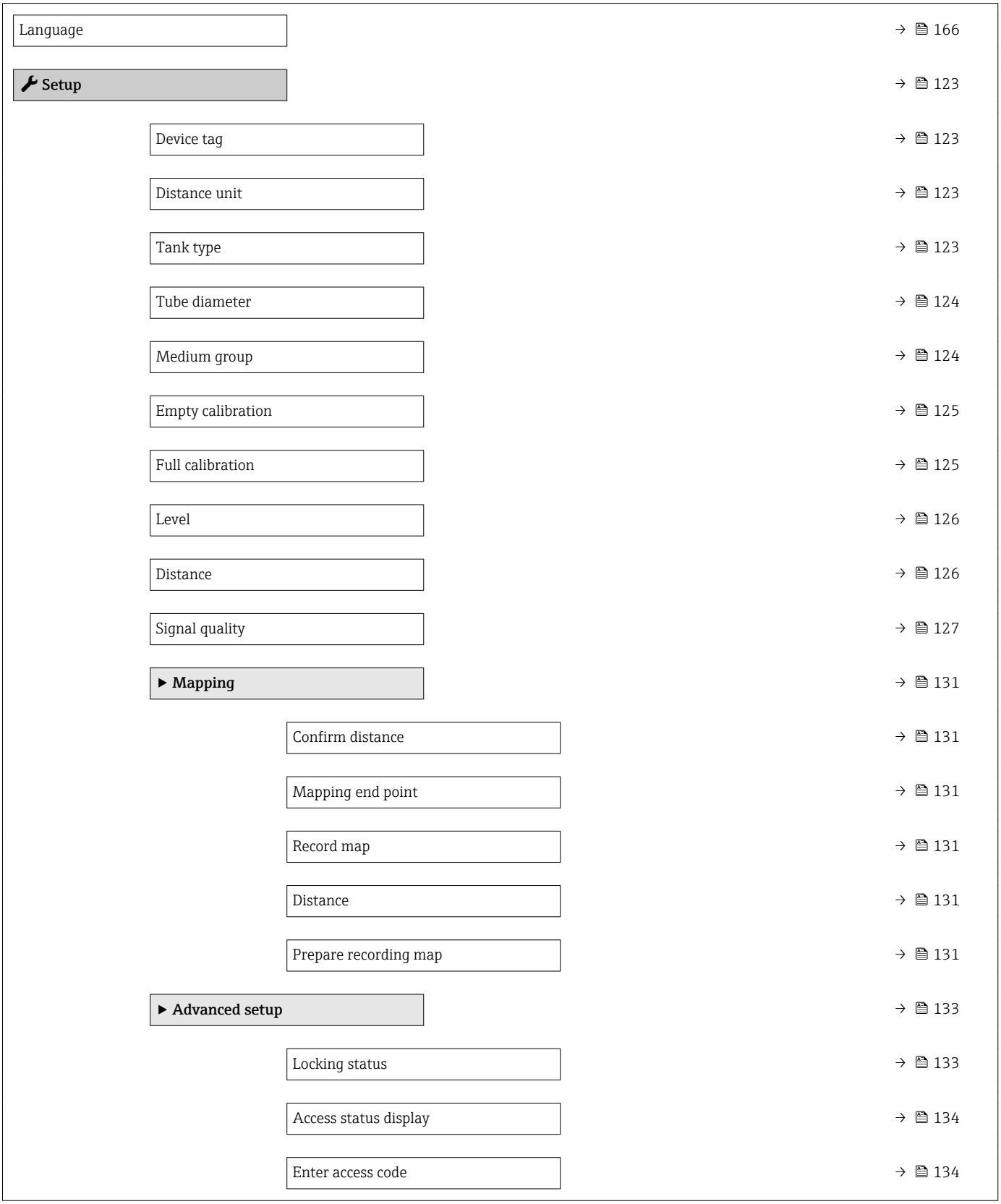

- ▶ **Level** → 135
  - Medium type → 135
  - Medium property → 135
  - Max. filling speed liquid → 136
  - Max. draining speed liquid → 136
  - Advanced process conditions → 137
  - Level unit → 138
  - Blocking distance → 138
  - Level correction → 139
  - Tank/silo height → 139
- ▶ **Linearization** → 142
  - Linearization type → 144
  - Unit after linearization → 145
  - Free text → 146
  - Maximum value → 147
  - Diameter → 147
  - Intermediate height → 147
  - Table mode → 148
  - ▶ **Edit table**
    - Level → 149
    - Customer value → 150
  - Activate table → 150
- ▶ **Safety settings** → 151
  - Output echo lost → 151
  - Value echo lost → 151

- Ramp at echo lost → 152
- Blocking distance → 138
- ▶ **SIL/WHG confirmation** → 154
- ▶ **Deactivate SIL/WHG** → 155
  - Reset write protection → 155
  - Code incorrect → 155
- ▶ **Current output 1 to 2** → 156
  - Assign current output → 156
  - Current span → 157
  - Fixed current → 157
  - Damping output → 158
  - Failure mode → 158
  - Failure current → 159
  - Output current 1 to 2 → 159
- ▶ **Switch output** → 160
  - Switch output function → 160
  - Assign status → 161
  - Assign limit → 161
  - Assign diagnostic behavior → 161
  - Switch-on value → 162
  - Switch-on delay → 163
  - Switch-off value → 163
  - Switch-off delay → 164
  - Failure mode → 164

	Switch status	→ 164
	Invert output signal	→ 164
▶ **Display**		→ 166
	Language	→ 166
	Format display	→ 166
	Value 1 to 4 display	→ 168
	Decimal places 1 to 4	→ 168
	Display interval	→ 168
	Display damping	→ 169
	Header	→ 169
	Header text	→ 169
	Separator	→ 170
	Number format	→ 170
	Decimal places menu	→ 170
	Backlight	→ 171
	Contrast display	→ 171
▶ **Configuration backup display**		→ 172
	Operating time	→ 172
	Last backup	→ 172

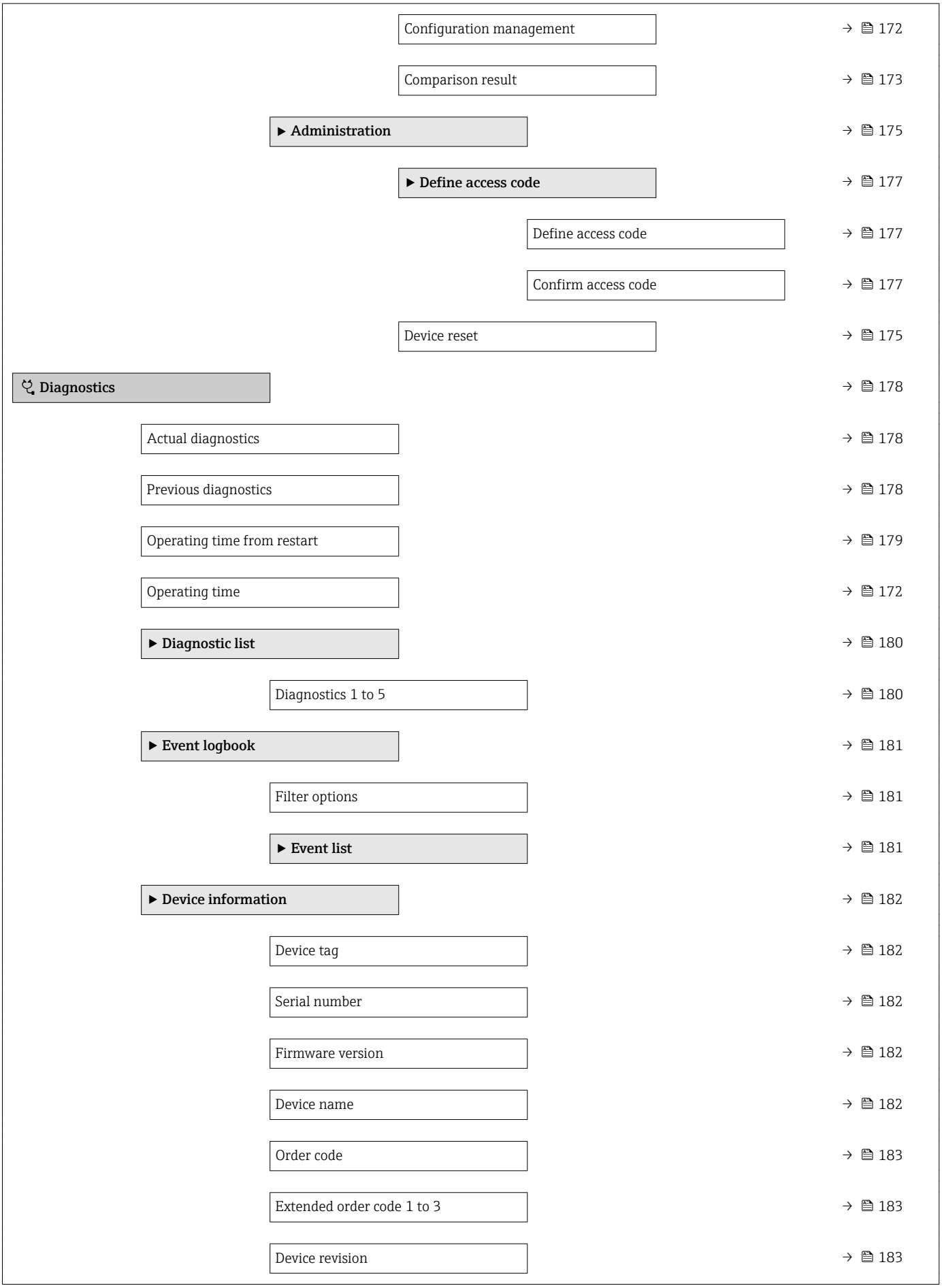
Configuration management → 172
Comparison result → 173
▶ Administration → 175
▶ Define access code → 177
Define access code → 177
Confirm access code → 177
Device reset → 175
Diagnostics → 178
Actual diagnostics → 178
Previous diagnostics → 178
Operating time from restart → 179
Operating time → 172
▶ Diagnostic list → 180
Diagnostics 1 to 5 → 180
▶ Event logbook → 181
Filter options → 181
▶ Event list → 181
▶ Device information → 182
Device tag → 182
Serial number → 182
Firmware version → 182
Device name → 182
Order code → 183
Extended order code 1 to 3 → 183
Device revision → 183

- Device ID → 183
- Device type → 184
- Manufacturer ID → 184
- ▶ **Measured values** → 185
  - Distance → 126
  - Level linearized → 146
  - Output current 1 to 2 → 159
  - Measured current 1 → 186
  - Terminal voltage 1 → 186
  - Electronic temperature → 186
- ▶ **Data logging** → 187
  - Assign channel 1 to 4 → 187
  - Logging interval → 187
  - Clear logging data → 188
  - ▶ **Display channel 1 to 4** → 189
- ▶ **Simulation** → 191
  - Assign measurement variable → 192
  - Process variable value → 192
  - Current output 1 to 2 simulation → 192
  - Value current output 1 to 2 → 193
  - Switch output simulation → 193
  - Switch status → 193
  - Device alarm simulation → 194

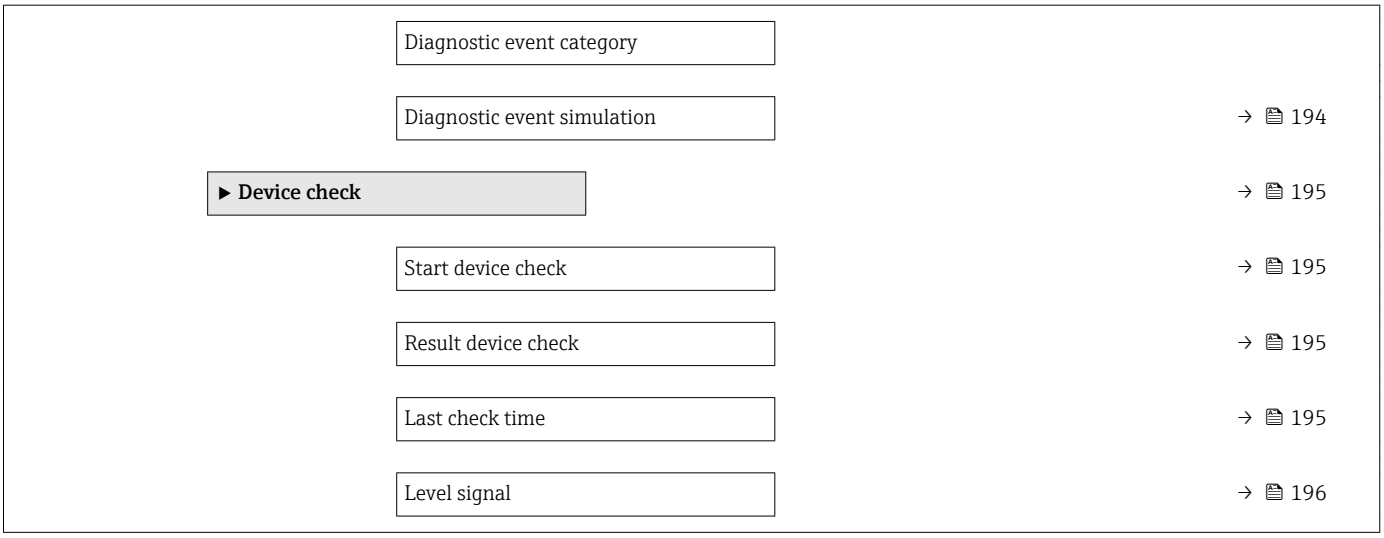
Diagnostic event category
Diagnostic event simulation
→ 194
► Device check
→ 195
Start device check
→ 195
Result device check
→ 195
Last check time
→ 195
Level signal
→ 196

17.3 Overview of the operating menu (operating tool)

Navigation Operating menu

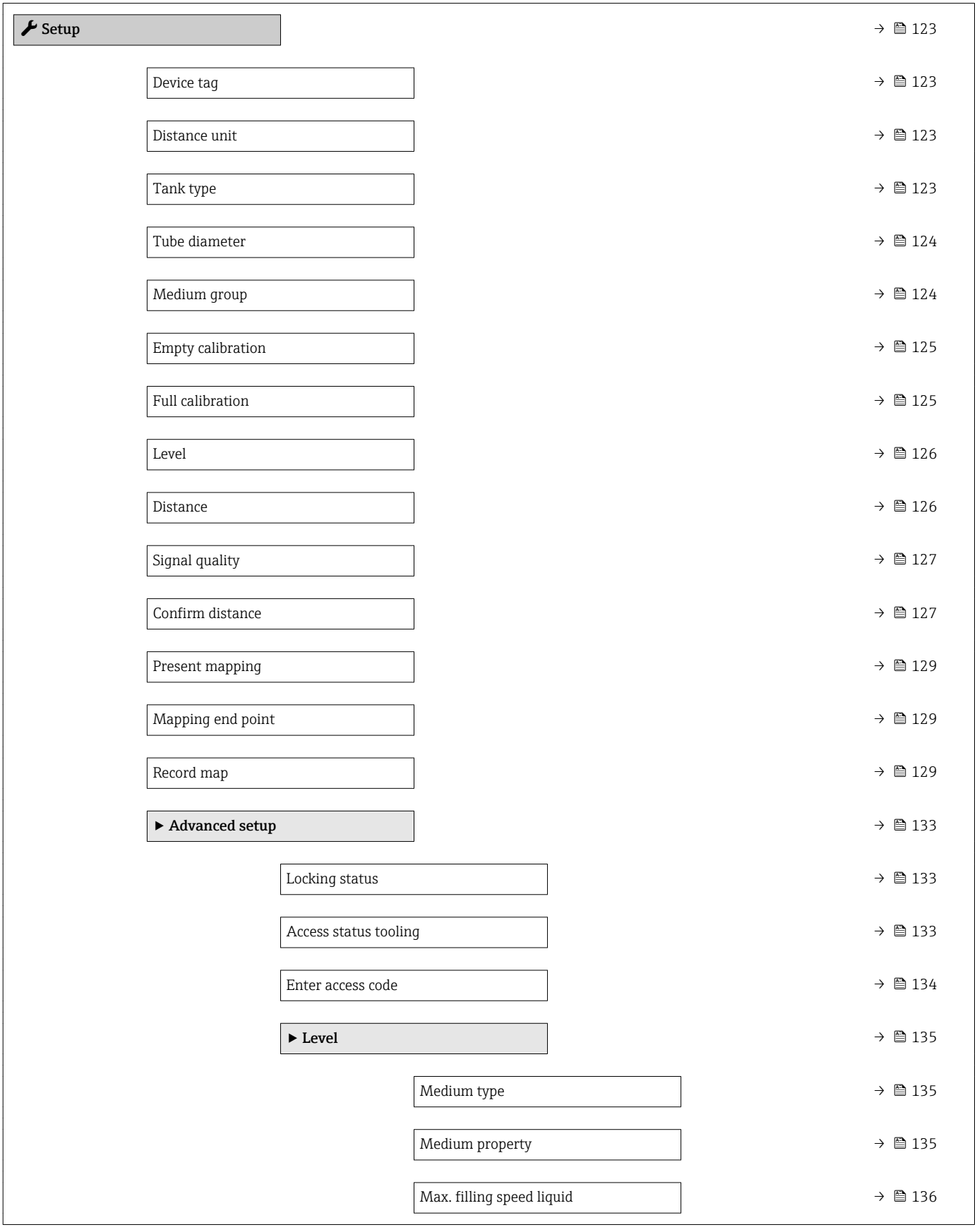

Max. draining speed liquid	→ 136
Advanced process conditions	→ 137
Level unit	→ 138
Blocking distance	→ 138
Level correction	→ 139
Tank/silo height	→ 139
▶ Linearization	→ 142
Linearization type	→ 144
Unit after linearization	→ 145
Free text	→ 146
Level linearized	→ 146
Maximum value	→ 147
Diameter	→ 147
Intermediate height	→ 147
Table mode	→ 148
Table number	→ 149
Level	→ 149
Level	→ 150
Customer value	→ 150
Activate table	→ 150
▶ Safety settings	→ 151
Output echo lost	→ 151
Value echo lost	→ 151
Ramp at echo lost	→ 152
Blocking distance	→ 138

▶ **SIL/WHG confirmation** → 154

▶ **Deactivate SIL/WHG** → 155

Reset write protection → 155

Code incorrect → 155

▶ **Current output 1 to 2** → 156

Assign current output → 156

Current span → 157

Fixed current → 157

Damping output → 158

Failure mode → 158

Failure current → 159

Output current 1 to 2 → 159

▶ **Switch output** → 160

Switch output function → 160

Assign status → 161

Assign limit → 161

Assign diagnostic behavior → 161

Switch-on value → 162

Switch-on delay → 163

Switch-off value → 163

Switch-off delay → 164

Failure mode → 164

Switch status → 164

Invert output signal → 164

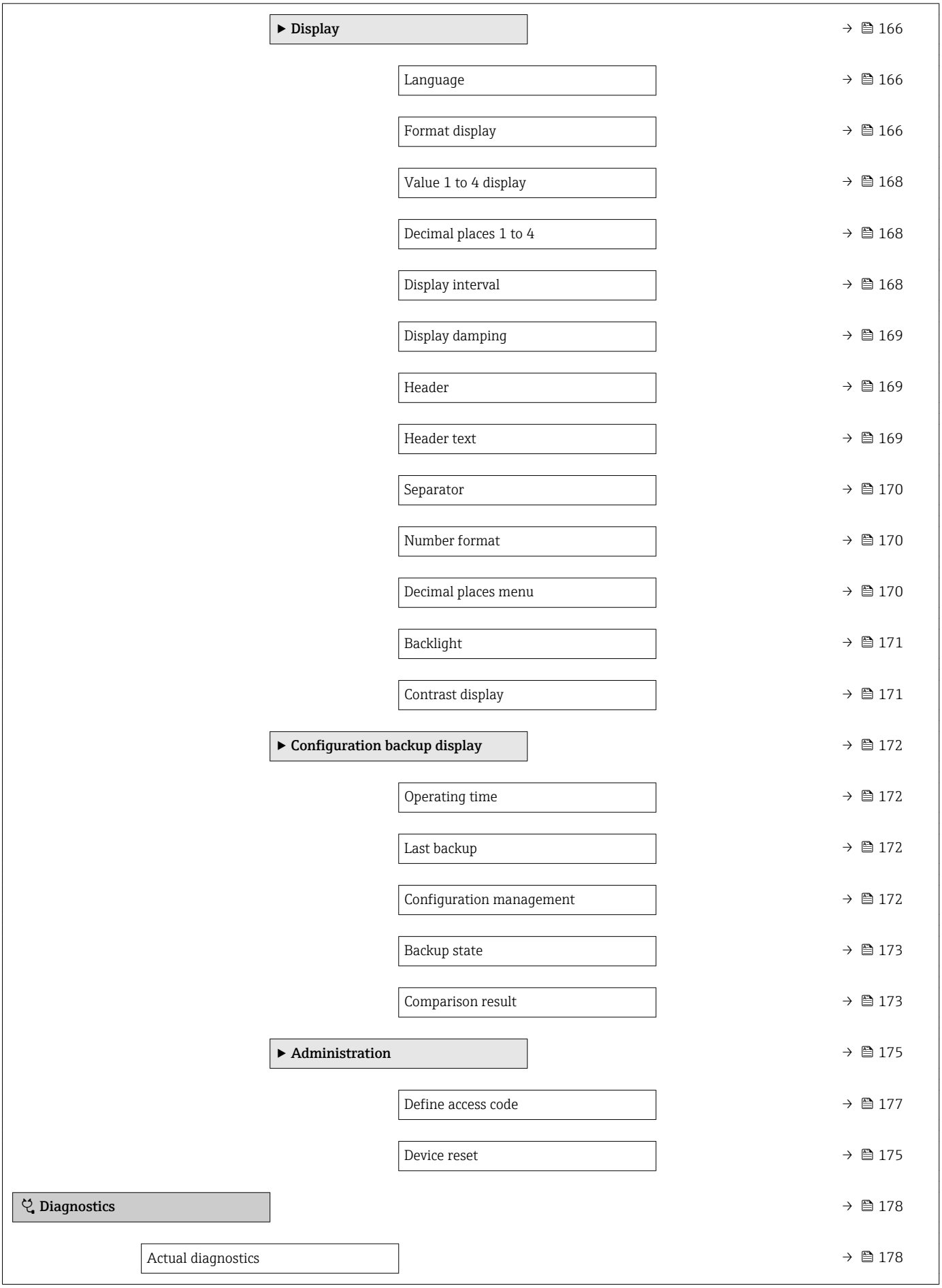
▶ Display → 166
Language → 166
Format display → 166
Value 1 to 4 display → 168
Decimal places 1 to 4 → 168
Display interval → 168
Display damping → 169
Header → 169
Header text → 169
Separator → 170
Number format → 170
Decimal places menu → 170
Backlight → 171
Contrast display → 171
▶ Configuration backup display → 172
Operating time → 172
Last backup → 172
Configuration management → 172
Backup state → 173
Comparison result → 173
▶ Administration → 175
Define access code → 177
Device reset → 175
Diagnostics → 178
Actual diagnostics → 178

- Timestamp → 178
- Previous diagnostics → 178
- Timestamp → 179
- Operating time from restart → 179
- Operating time → 172
- **▶ Diagnostic list** → 180
  - Diagnostics 1 to 5 → 180
  - Timestamp 1 to 5 → 180
- **▶ Device information** → 182
  - Device tag → 182
  - Serial number → 182
  - Firmware version → 182
  - Device name → 182
  - Order code → 183
  - Extended order code 1 to 3 → 183
  - Device revision → 183
  - Device ID → 183
  - Device type → 184
  - Manufacturer ID → 184
- **▶ Measured values** → 185
  - Distance → 126
  - Level linearized → 146
  - Output current 1 to 2 → 159
  - Measured current 1 → 186

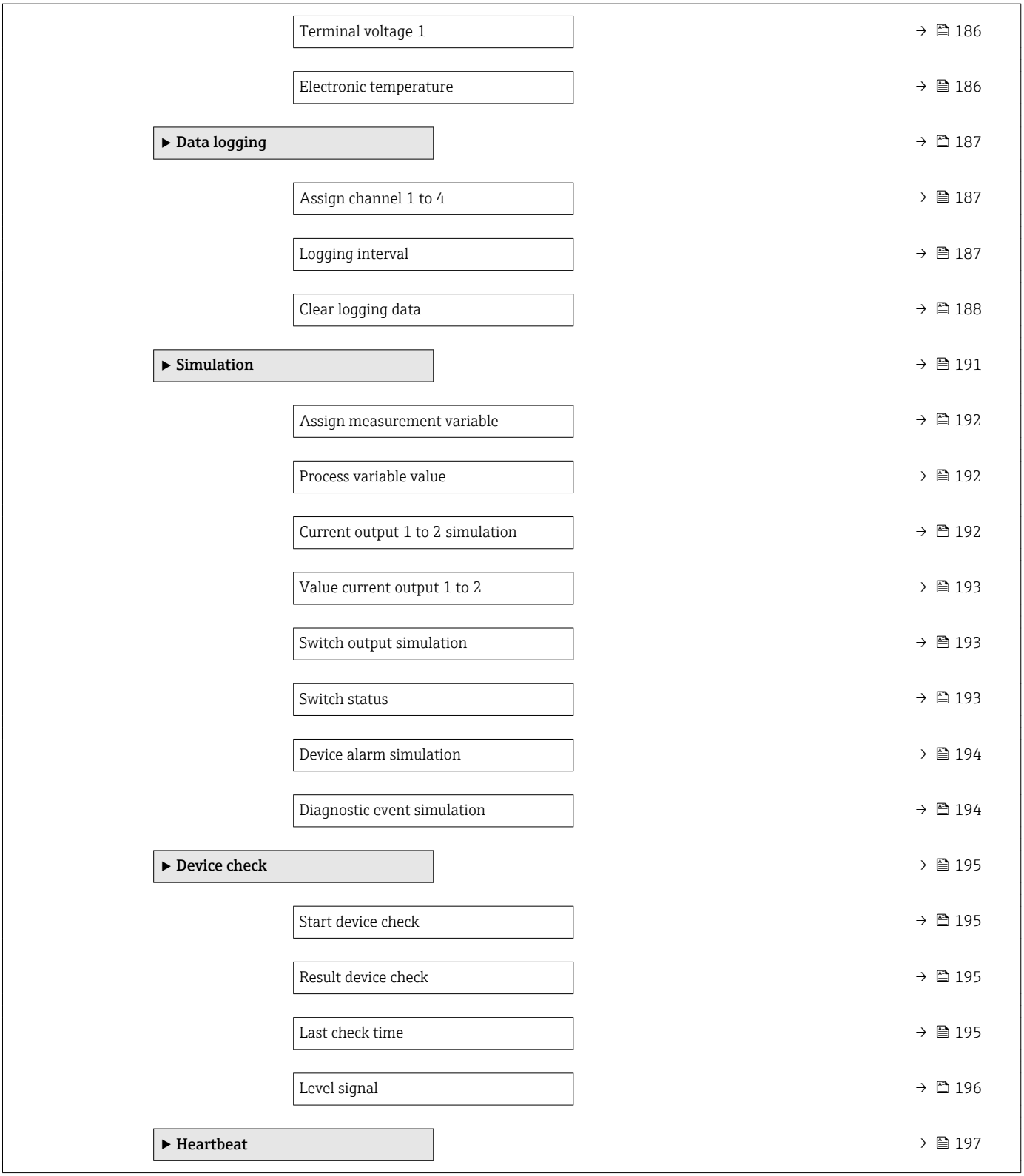
Terminal voltage 1 → 186
Electronic temperature → 186
▶ Data logging → 187
Assign channel 1 to 4 → 187
Logging interval → 187
Clear logging data → 188
▶ Simulation → 191
Assign measurement variable → 192
Process variable value → 192
Current output 1 to 2 simulation → 192
Value current output 1 to 2 → 193
Switch output simulation → 193
Switch status → 193
Device alarm simulation → 194
Diagnostic event simulation → 194
▶ Device check → 195
Start device check → 195
Result device check → 195
Last check time → 195
Level signal → 196
▶ Heartbeat → 197

17.4 "Setup" menu

- : Marks the navigation path to the parameter via the display and operating module.
- : Marks the navigation path to the parameter via an operating tool (e.g. FieldCare).
- : Marks parameters which can be locked via the software locking.

Navigation Setup

Device tag

Navigation Setup → Device tag

Description Enter a unique name for the measuring point to identify the device quickly within the plant.

Factory setting FMR5x

Distance unit

Navigation Setup → Distance unit

Description Used for the basic calibration (Empty / Full).

Selection

SI units	*US units*
▪ mm	▪ ft
▪ m	▪ in

Factory setting m

Tank type

Navigation Setup → Tank type

Prerequisite **Medium type (→ 135) = Liquid**

Description Select tank type.

Selection
- Bypass / pipe
- Stilling well
- Workbench test
- Open channel
- Sphere
- Storage vessel

- Process vessel standard
- Process vessel with agitator
- Wave guide antenna

Factory setting Depending on the antenna

Additional information Depending on the antenna some of the options mentioned above may not be available or there may be additional options.

Tube diameter

Navigation Setup → Tube diameter

Prerequisite **Tank type (→ 123)** = **Bypass / pipe**

Description Specify diameter of bypass or stilling well.

User entry 0 to 9.999 m

Factory setting 0 m

Medium group

Navigation Setup → Medium group

Prerequisite **Medium type (→ 135)** = **Liquid**

Description Select medium group.

Selection
- Others
- Water based (DC >= 4)

Factory setting Others

Additional information This parameter roughly specifies the dielectric constant (DC) of the medium. For a more detailed definition of the DC use the **Medium property** parameter (→ 135).

The **Medium group** parameter presets the **Medium property** parameter (→ 135) as follows:

Medium group	Medium property (→ 135)
Others	Unknown
Water based (DC >= 4)	DC 4 … 7

The **Medium property** parameter can be changed at a later point of time. However, when doing so, the **Medium group** parameter retains its value. Only the **Medium property** parameter is relevant for the signal evaluation.

The measuring range may be reduced for small dielectric constants. For details refer to the Technical Information (TI) of the respective device.

Empty calibration

Navigation Setup → Empty calibration

Description Distance between process connection and minimum level (0%).

User entry Depending on the antenna

Factory setting Depending on the antenna

Additional information

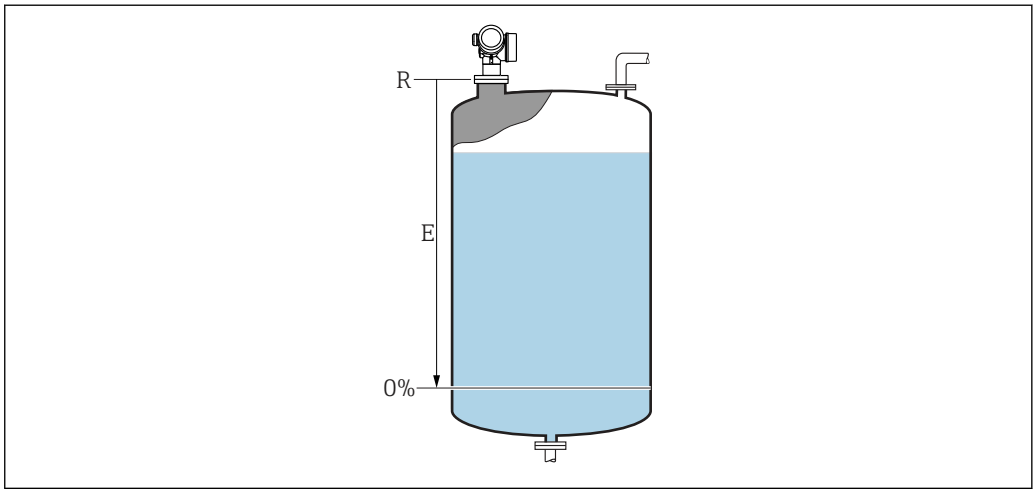

44 *Empty calibration (E) for level measurements in liquids*

The measuring range starts at the point at which the radar beam hits the tank or silo bottom. In the case of dished boiler ends or conical outlets levels below this point can not be measured.

Full calibration

Navigation Setup → Full calibration

Description Distance between minimum level (0%) and maximum level (100%).

User entry Depending on the antenna

Factory setting Depending on the antenna

Additional information

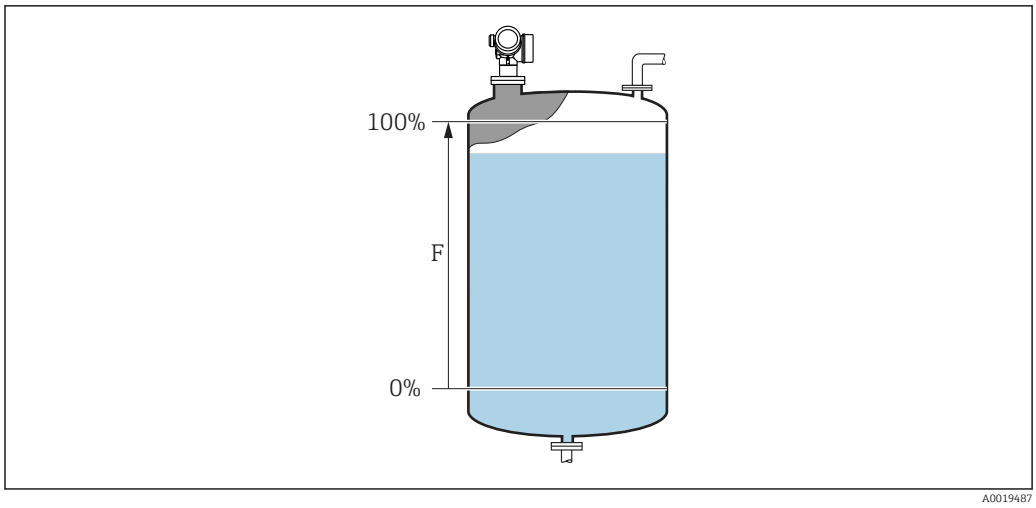

45 *Full calibration (F) for level measurements in liquids*

Level

Navigation Setup → Level

Description Displays measured level L (before linearization).

Additional information

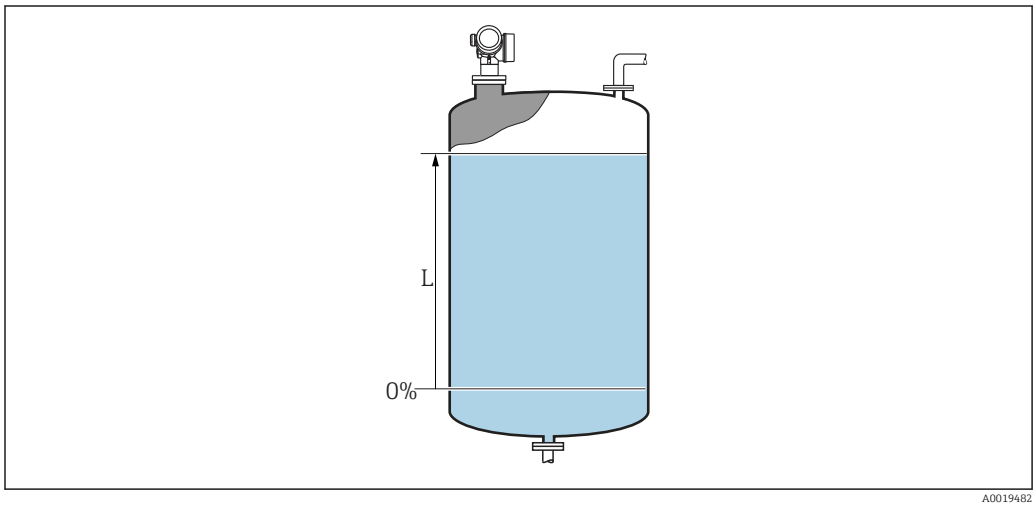

46 *Level in case of liquid measurements*

The unit is defined in the **Level unit** parameter (→ 138).

Distance

Navigation Setup → Distance

Description Displays the measured distance D between the reference point (lower edge of the flange or threaded connection) and the level.

Additional information

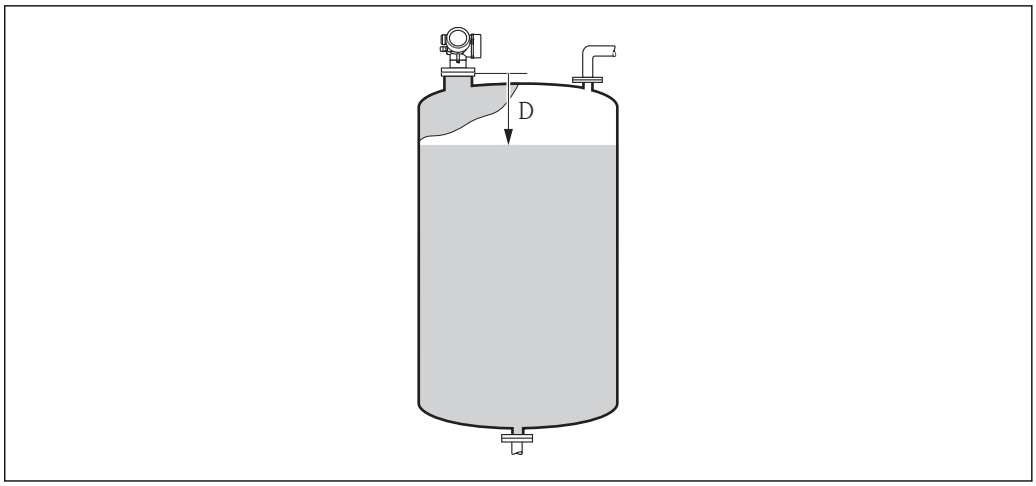

47 *Distance for liquid measurements*

The unit is defined in the **Distance unit** parameter (→ 123).

Signal quality

Navigation Setup → Signal quality

Description Displays the signal quality of the level echo.

Additional information

Meaning of the display options

- **Strong**
  The evaluated echo exceeds the threshold by at least 10 dB.
- **Medium**
  The evaluated echo exceeds the threshold by at least 5 dB.
- **Weak**
  The evaluated echo exceeds the threshold by less than 5 dB.
- **No signal**
  The device does not find a usable echo.

The signal quality indicated in this parameter always refers to the currently evaluated echo: either the level echo or the tank bottome echo. To differentiate between these two, the quality of the tank bottom echo echo is always displayed in brackets.

In case of a lost echo (**Signal quality = No signal**) the device generates the following error message:
- F941, for **Output echo lost (→ 151) = Alarm**.
- S941, if another option has been selected in **Output echo lost (→ 151)**.

Confirm distance

Navigation Setup → Confirm distance

Description Specify, whether the measured distance matches the real distance.

Depending on the selection the device automatically sets the range of mapping.

Selection

- Manual map
- Distance ok
- Distance unknown
- Distance too small *
- Distance too big *
- Tank empty
- Factory map

Factory setting

Distance unknown

Additional information

Meaning of the options

- **Manual map**
  To be selected if the range of mapping is to be defined manually in the **Mapping end point** parameter (→ 🖹 129). In this case it is not necessary to confirm the distance.
- **Distance ok**
  To be selected if the measured distance matches the actual distance. The device performs a mapping.
- **Distance unknown**
  To be selected if the actual distance is unknown. A mapping can not be performed in this case.
- **Distance too small**
  To be selected if the measured distance is smaller than the actual distance. The device searches for the next echo and returns to the **Confirm distance** parameter. The distance is recalculated and displayed. The comparison must be repeated until the displayed distance matches the actual distance. After this, the recording of the map can be started by selecting **Distance ok**.
- **Distance too big** [8)]
  To be selected if the measured distance exceeds the actual distance. The device adjusts the signal evaluation and returns to the **Confirm distance** parameter. The distance is recalculated and displayed. The comparison must be repeated until the displayed distance matches the actual distance. After this, the recording of the map can be started by selecting **Distance ok**.
- **Tank empty**
  To be selected if the tank is completely empty. The device records a mapping covering the complete measuring range as defined by the **Tank/silo height** parameter (→ 🖹 139). By default, **Tank/silo height** = **Empty calibration**.
  Take into account that in case of conical outlets, for example, a measurement is only possible up to the point at which the radar hits the bottom of the tank or silo. If the **Tank empty** option is used, **Empty calibration (→ 🖹 125)** and **Tank/silo height** may not reach below this point as otherwise the empty signal is suppressed.
- **Factory map**
  To be selected if the present mapping curve (if one exists) is to be deleted. The device returns to the **Confirm distance** parameter and a new mapping can be recorded.

When operating via the display module, the measured distance is displayed together with this parameter for reference purposes.

If the teaching procedure with the **Distance too small** option or the **Distance too big** option is quit before the distance has been confirmed, a map is **not** recorded and the teaching procedure is reset after 60 s.

* Visibility depends on order options or device settings

8) Only available for "Expert → Sensor → Echo tracking → **Evaluation mode** parameter" = "Short time history" or "Long time history"

Present mapping

Navigation Setup → Present mapping

Description Indicates up to which distance a mapping has already been recorded.

Mapping end point

Navigation Setup → Mapping end point

Prerequisite **Confirm distance (→ 127)** = **Manual map** or **Distance too small**

Description Specify new end of the mapping.

User entry 0.1 to 999 999.9 m

Factory setting 0.1 m

Additional information This parameter defines up to which distance the new mapping is to be recorded. The distance is measured from the reference point, i.e. from the lower edge of the mounting flange or the threaded connection.

For reference purposes the **Present mapping** parameter (→ 129) is displayed together with this parameter. It indicates up to which distance a mapping has already been recorded.

Record map

Navigation Setup → Record map

Prerequisite **Confirm distance (→ 127)** = **Manual map** or **Distance too small**

Description Start recording of the map.

Selection
- No
- Record map
- Overlay map
- Factory map
- Delete partial map

Factory setting No

Additional information

Meaning of the options

- **No**
  The map is not recorded.
- **Record map**
  The map is recorded. After the recording is completed, the new measured distance and the new mapping range appear on the display. When operating via the local display, these values must be confirmed by pressing ☑.
- **Overlay map**
  The new mapping curve is generated by overlaying the old and the current envelope curves.
- **Factory map**
  The factory map stored in the ROM of the device is used.
- **Delete partial map**
  The mapping curve is deleted up to **Mapping end point (→ 🖹 129)**.

17.4.1 "Mapping" wizard

The **Mapping** wizard is only available when operating via the local display. When operating via an operating tool, all parameters concerning the mapping are located directly in the **Setup** menu (→ 123).

In the **Mapping** wizard two parameters are displayed simultaneously on the display module at any one time. The upper parameter can be edited, whereas the lower parameter is displayed for reference purposes only.

Navigation Setup → Mapping

Confirm distance

Navigation Setup → Mapping → Confirm distance

Description → 127

Mapping end point

Navigation Setup → Mapping → Mapping end point

Description → 129

Record map

Navigation Setup → Mapping → Record map

Description → 129

Distance

Navigation Setup → Mapping → Distance

Description → 126

Prepare recording map

Navigation Setup → Mapping → Prepare recording map

Description Indicates the progress of the recording of the map.

User interface

- Init. recording
- In progress
- Finished

17.4.2 "Advanced setup" submenu

Navigation Setup → Advanced setup

Locking status

Navigation Setup → Advanced setup → Locking status

Description Indicates the write protection with the highest priority that is currently active.

User interface
- Hardware locked
- SIL locked
- CT active - defined parameters
- WHG locked
- Temporarily locked

Additional information

Meaning and priorities of the types of write protection
- **Hardware locked (priority 1)**
  The DIP switch for hardware locking is activated on the main electronics module. This locks write access to the parameters.
- **SIL locked (priority 2)**
  The SIL mode is activated. Writing access to the relevant parameters is denied.
- **WHG locked (priority 3)**
  The WHG mode is activated. Writing access to the relevant parameters is denied.
- **Temporarily locked (priority 4)**
  Write access to the parameters is temporarily locked on account of internal processes in progress in the device (e.g. data upload/download, reset etc.). The parameters can be modified as soon as the processes are complete.

On the display module, the -symbol appears in front of parameters that cannot be modified since they are write-protected.

Access status tooling

Navigation Setup → Advanced setup → Access status tooling

Description Shows the access authorization to the parameters via the operating tool.

Additional information

The access authorization can be changed via the **Enter access code** parameter (→ 134).

If additional write protection is active, this restricts the current access authorization even further. The write protection status can be viewed via the **Locking status** parameter (→ 133).

Access status display

Navigation Setup → Advanced setup → Access status display

Prerequisite The device has a local display.

Description Indicates access authorization to parameters via local display.

Additional information

The access authorization can be changed via the **Enter access code** parameter (→ 134).

If additional write protection is active, this restricts the current access authorization even further. The write protection status can be viewed via the **Locking status** parameter (→ 133).

Enter access code

Navigation Setup → Advanced setup → Enter access code

Description Enter access code to disable write protection of parameters.

User entry 0 to 9999

Additional information

- For local operation, the customer-specific access code, which has been defined in the **Define access code** parameter (→ 175), has to be entered.
- If an incorrect access code is entered, the user retains his current access authorization.
- The write protection affects all parameters marked with the -symbol in this document. On the local display, the -symbol in front of a parameter indicates that the parameter is write-protected.
- If no key is pressed for 10 min, or the user switches from the navigation and editing mode back to the measured value display mode, the device automatically locks the write-protected parameters after another 60 s.

Please contact your Endress+Hauser Sales Center if you lose your access code.

"Level" submenu

Navigation Setup → Advanced setup → Level

Medium type

Navigation Setup → Advanced setup → Level → Medium type

Description Specify type of medium.

User interface
- Liquid
- Solid

Factory setting FMR50, FMR51, FMR52, FMR53, FMR54: **Liquid**

Additional information This parameter determines the value of several other parameters and strongly influences the complete signal evaluation. Therefore, it is strongly recommended **not to change** the factory setting.

Medium property

Navigation Setup → Advanced setup → Level → Medium property

Description Specify relative dielectric constant ε_r of the medium.

Selection
- Unknown
- DC 1.4 ... 1.6
- DC 1.6 ... 1.9
- DC 1.9 ... 2.5
- DC 2.5 ... 4
- DC 4 ... 7
- DC 7 ... 15
- DC > 15

Factory setting Dependent on **Medium type (→ 135)** and **Medium group (→ 124)**.

Additional information *Dependency on "Medium type" and "Medium group"*

Medium type (→ 135)	Medium group (→ 124)	Medium property
Solid		Unknown
Liquid	Water based (DC >= 4)	DC 4 ... 7
	Others	Unknown

For dielectric constants (DC values) of many media commonly used in various industries refer to:
- the Endress+Hauser DC manual (CP01076F)
- the Endress+Hauser "DC Values App" (available for Android and iOS)

Max. filling speed liquid

Navigation Setup → Advanced setup → Level → Max. filling speed liquid

Prerequisite **Medium type (→ 135) = Liquid**

Description Select expected maximum filling speed.

Selection
- Slow < 1cm (0.4in) /min
- Medium < 10cm (4in) /min
- Standard < 1m (40in) /min
- Fast < 2m (80in) /min
- Very fast > 2m (80in) /min
- No filter / test

Factory setting Depending on the **Tank type** parameter (→ 123)

Additional information The device adjusts the signal evaluation filters and the damping of the output signal to the typical rate of level change defined in this parameter:

Max. filling speed liquid	Step response time / s
Slow < 1cm (0.4in) /min	90
Medium < 10cm (4in) /min	50
Standard < 1m (40in) /min	20
Fast < 2m (80in) /min	8
Very fast > 2m (80in) /min	5
No filter / test	< 1

Max. filling speed liquid is preset by **Tank type (→ 123)**. It can, however, be adjusted to the process in the vessel at any time. If **Tank type (→ 123)** is changed again at a later point of time, it may be necessary to repeat the fine adjustment.

Max. draining speed liquid

Navigation Setup → Advanced setup → Level → Max. draining speed liquid

Prerequisite **Medium type (→ 135) = Liquid**

Description Select expected maximum draining speed.

Selection
- Slow < 1cm (0.4in) /min
- Medium < 10cm (4in) /min
- Standard < 1m (40in) /min
- Fast < 2m (80in) /min
- Very fast > 2m (80in) /min
- No filter / test

Factory setting Depending on the **Tank type** parameter (→ 123)

Additional information

The device adjusts the signal evaluation filters and the damping of the output signal to the typical rate of level change defined in this parameter:

Max. draining speed liquid (→ 136)	Step response time / s
Slow < 1cm (0.4in) /min	90
Medium < 10cm (4in) /min	50
Standard < 1m (40in) /min	20
Fast < 2m (80in) /min	8
Very fast > 2m (80in) /min	5
No filter / test	< 1

Max. draining speed liquid (→ 136) is preset by **Tank type (→ 123)**. It can, however, be adjusted to the process in the vessel at any time. If **Tank type (→ 123)** is changed again at a later point of time, it may be necessary to repeat the fine adjustment.

Advanced process conditions

Navigation Setup → Advanced setup → Level → Advanced process conditions

Description Specify additional process conditions (if required).

Selection
- Foam (>5cm/0,16ft)
- Changing DC values

Factory setting None

Additional information

"Foam (>5cm/0,16ft)" option

This option makes sure that no tank history is used which has been recorded while foam was present at the surface and thus is no reliable map of the tank property. To achieve this, the setting **Evaluation mode** = **Long time history** is deactivated.

The **Foam (>5cm/0,16ft)** option is only available for liquid applications (FMR50, FMR51, FMR52, FMR53, FMR54).

"Changing DC values" option

A tank history which has been recorded with **Evaluation mode** = **Long time history** is only valid for a fixed dielectric constant. The **Changing DC values** option disables the setting **Evaluation mode** = **Long time history** and thus avoids wrong measuring values in the case of a changing dielectric constant.

The **Changing DC values** option is only available for liquid applications (FMR50, FMR51, FMR52, FMR53, FMR54).

Level unit

Navigation Setup → Advanced setup → Level → Level unit

Description Select level unit.

Selection

SI units
- %
- m
- mm

US units
- ft
- in

Factory setting %

Additional information The level unit may differ from the distance unit defined in the **Distance unit** parameter (→ 123):

- The unit defined in the **Distance unit** parameter is used for the basic calibration (**Empty calibration (→ 125)** and **Full calibration (→ 125)**).
- The unit defined in the **Level unit** parameter is used to display the (unlinearized) level.

Blocking distance

Navigation Setup → Advanced setup → Level → Blocking distance

Description Specify blocking distance BD.

User entry 0 to 200 m

Factory setting FMR50, FMR51, FMR53, FMR54: antenna length

Additional information Signals in the blocking distance are only evaluated if they have been outside the blocking distance when the device was switched on and move into the blocking distance due to a level change during operation. Signals which are already in the blocking distance when the device is switched on, are ignored.

This behavior is only valid if the following two conditions are met:
- Expert → Sensor → Echo tracking → Evaluation mode = **Short time history** or **Long time history**
- Expert → Sensor → Gas phase compensation → GPC mode= **On**, **Without correction** or **External correction**

If one of these conditions is not met, signals in the blocking distance will always be ignored.

If required, a different behavior for signals in the blocking distance can be defined by the Endress+Hauser service.

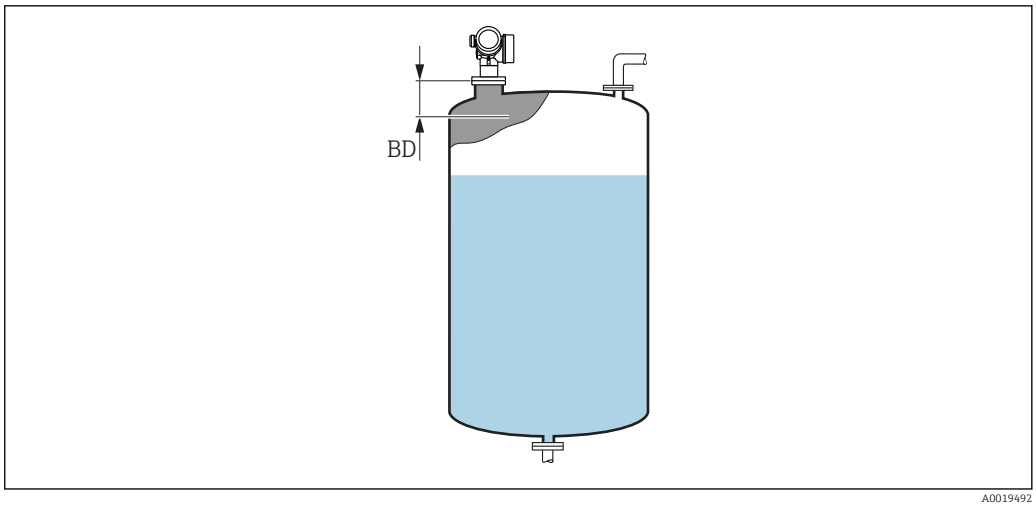

48 *Blocking distance (BD) for liquid measurements*

Level correction

Navigation Setup → Advanced setup → Level → Level correction

Description Specify level correction (if required).

User entry −200 000.0 to 200 000.0 %

Factory setting 0.0 %

Additional information The value specified in this parameter is added to the measured level (before linearization).

Tank/silo height

Navigation Setup → Advanced setup → Level → Tank/silo height

Description Specify total height of the tank or silo as measured from the process connection.

User entry −999.9999 to 999.9999 m

Factory setting **Empty calibration (→ 125)**

Additional information If the parametrized measuring range (**Empty calibration (→ 125)**) differs significantly from the tank or silo height, it is recommended to enter the tank or silo height. Example: Continuous level monitoring in the upper third of a tank or silo.

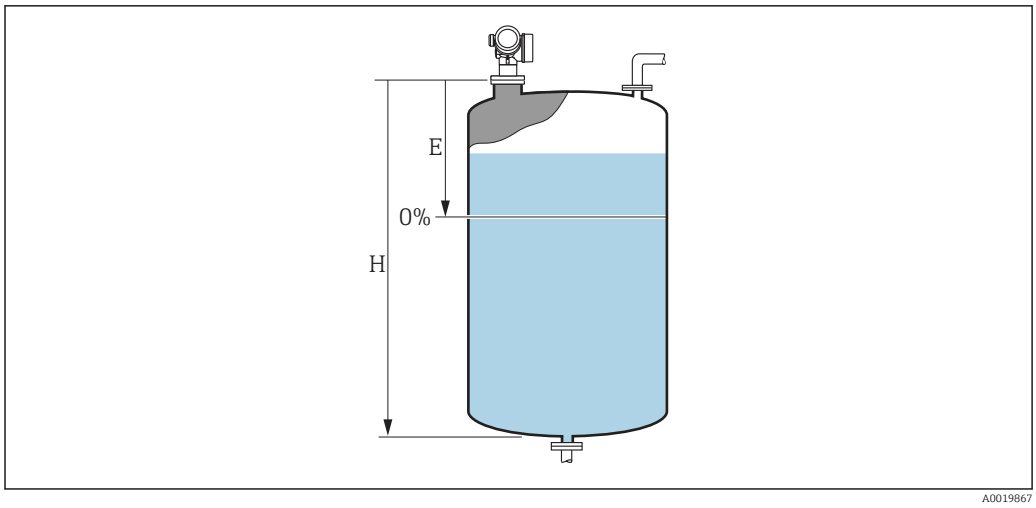

49 "Tank/silo height" parameter (→ 139)' for measurements in liquids

E Empty calibration (→ 125)
H Tank/silo height (→ 139)

For tanks with conical outlet, **Tank/silo height** should not be changed as in this type of applications **Empty calibration (→ 125)** is usually **not** << the tank or silo height.

"Linearization" submenu

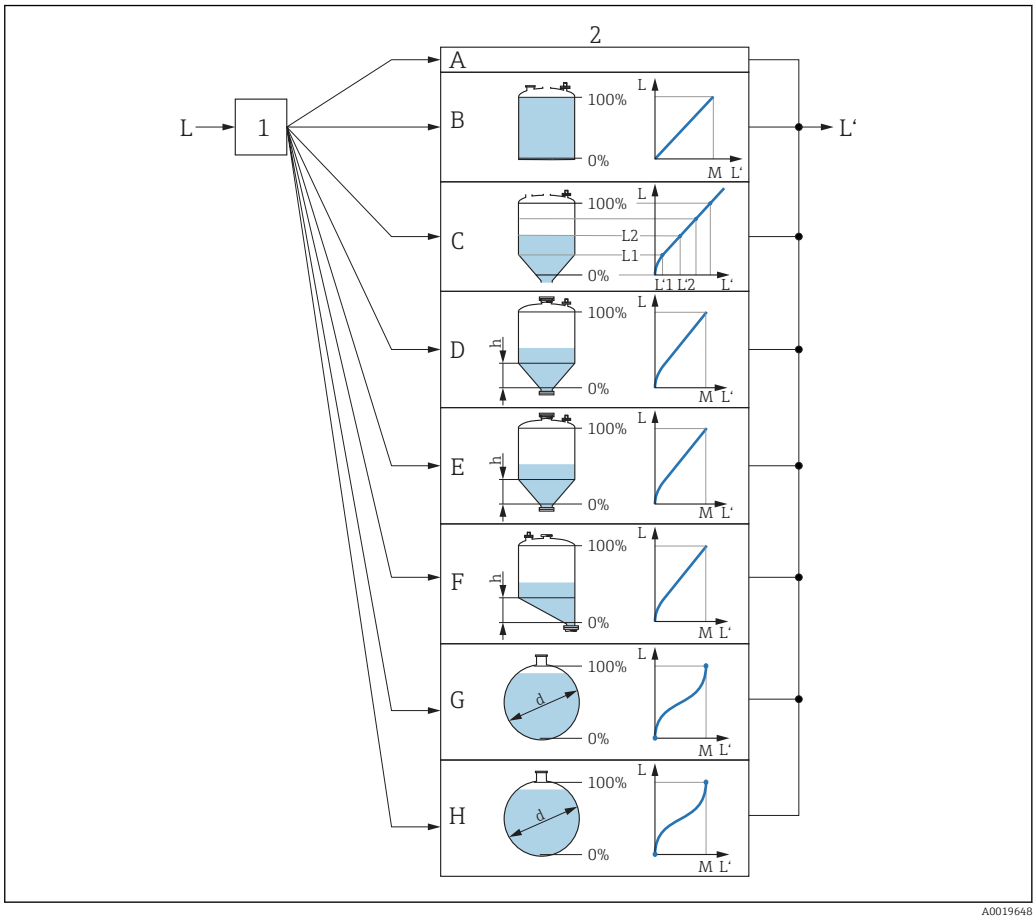

50 *Linearization: Transformation of the level and (if relevant) the interface height into a volume or weight; the transformation is dependent on the shape of the vessel.*

1 Selection of linearization type and unit
2 Configuration of the linearization
A Linearization type (→ 144) = None
B Linearization type (→ 144) = Linear
C Linearization type (→ 144) = Table
D Linearization type (→ 144) = Pyramid bottom
E Linearization type (→ 144) = Conical bottom
F Linearization type (→ 144) = Angled bottom
G Linearization type (→ 144) = Horizontal cylinder
H Linearization type (→ 144) = Sphere
L Level before linearization (measured in distance units)
L' Level linearized (→ 146) (corresponds to volume or weight)
M Maximum value (→ 147)
d Diameter (→ 147)
h Intermediate height (→ 147)

Structure of the submenu on the display module

Navigation Setup → Advanced setup → Linearization

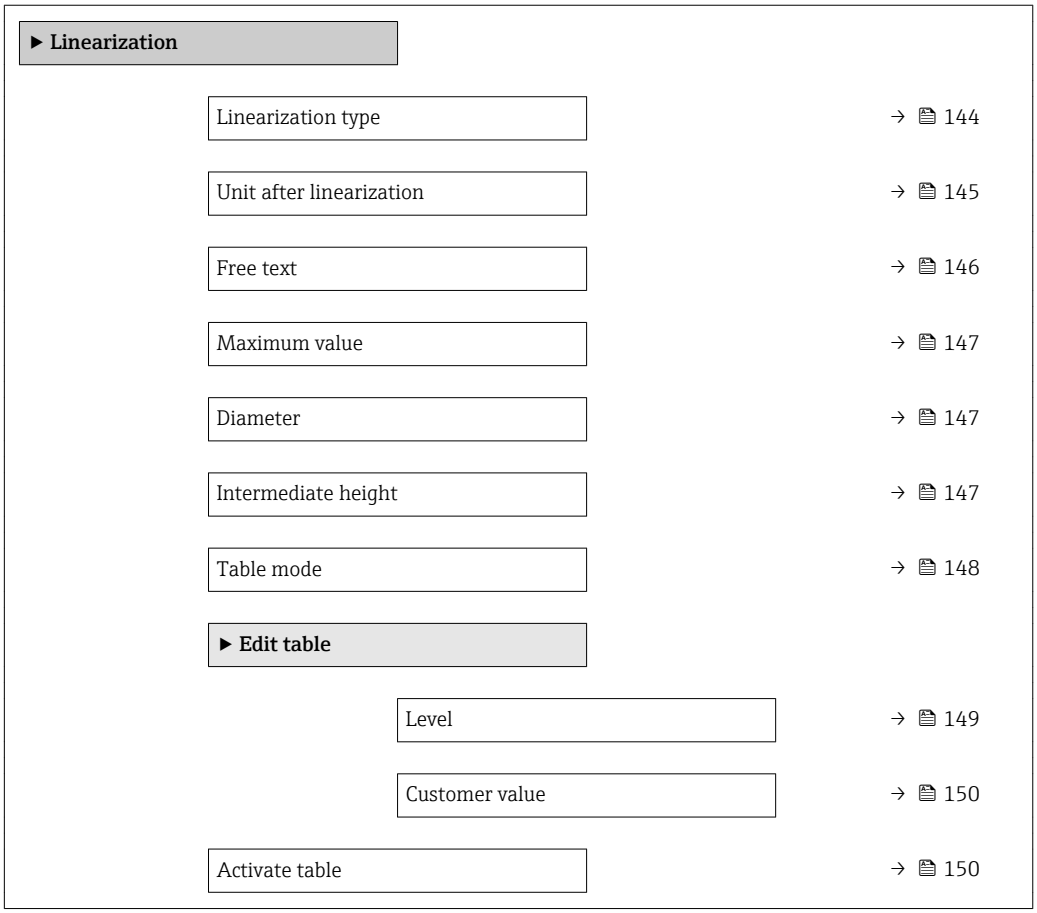

Structure of the submenu in an operating tool (e.g. FieldCare)

Navigation Setup → Advanced setup → Linearization

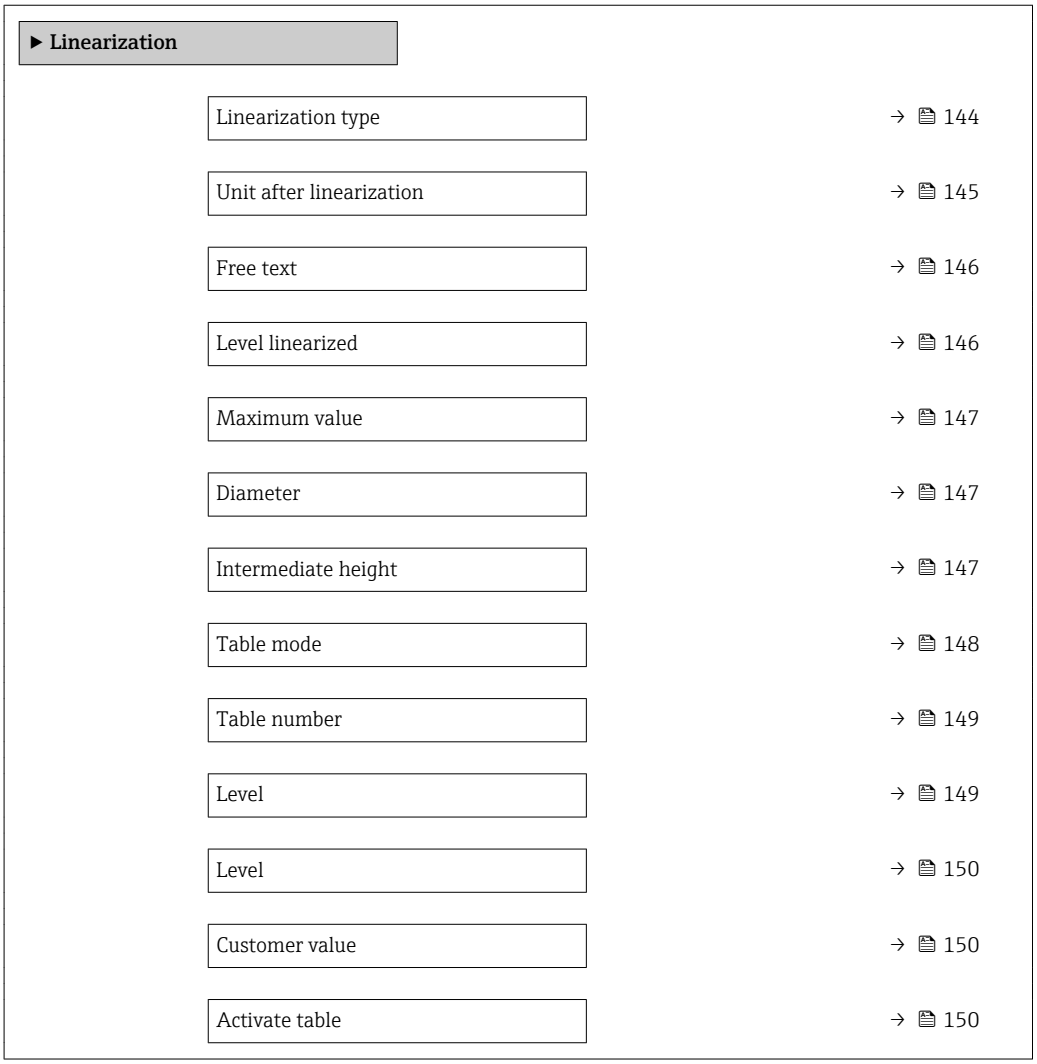

Description of parameters

Navigation Setup → Advanced setup → Linearization

Linearization type

Navigation Setup → Advanced setup → Linearization → Linearization type

Description Select linearization type.

Selection
- None
- Linear
- Table
- Pyramid bottom
- Conical bottom
- Angled bottom
- Horizontal cylinder
- Sphere

Factory setting None

Additional information

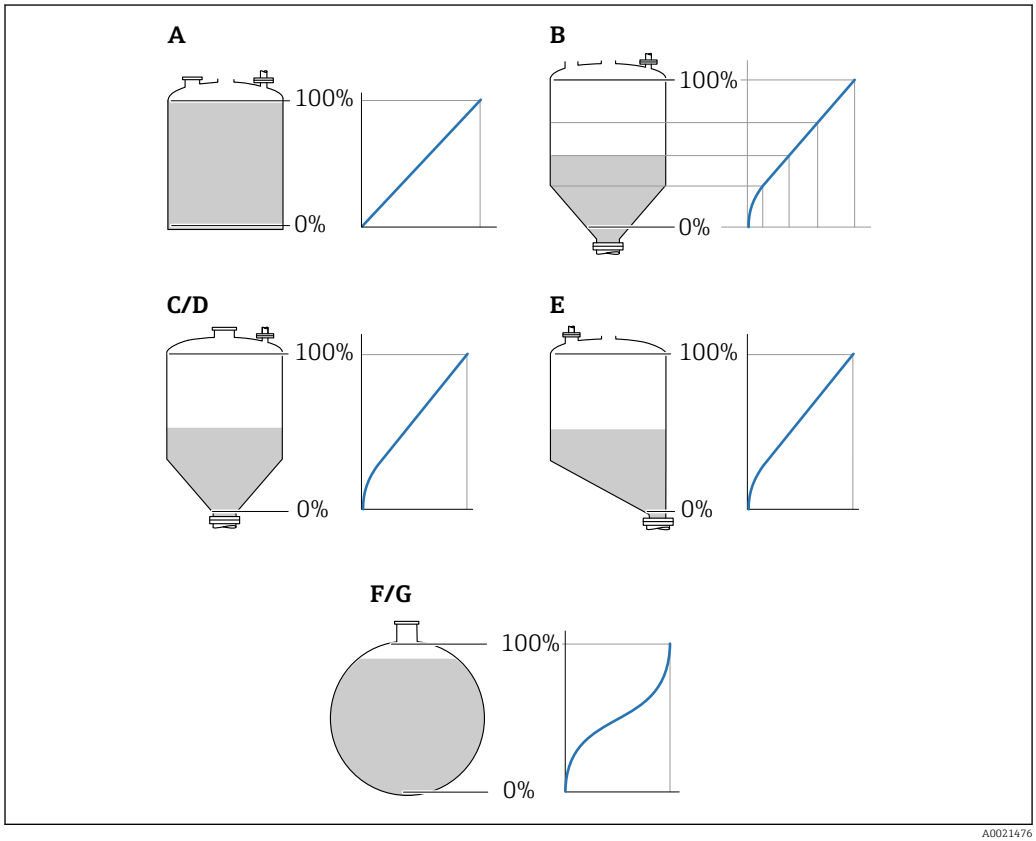

51 Linearization types

A None
B Table
C Pyramid bottom
D Conical bottom
E Angled bottom
F Sphere
G Horizontal cylinder

Meaning of the options

- **None**
  The level is transmitted in the level unit without linearization.
- **Linear**
  The output value (volume/weight) is directly proportional to the level L. This is valid, for example, for vertical cylinders. The following additional parameters have to be specified:
  – **Unit after linearization (→ 145)**
  – **Maximum value (→ 147)**: Maximum volume or weight
- **Table**
  The relationship between the measured level L and the output value (volume/weight) is given by a linearization table consisting of up to 32 pairs of values "level - volume" or "level - weight", respectively. The following additional parameters have to be specified:
  – **Unit after linearization (→ 145)**
  – **Table mode (→ 148)**
  – For each table point: **Level (→ 149)**
  – For each table point: **Customer value (→ 150)**
  – **Activate table (→ 150)**
- **Pyramid bottom**
  The output value corresponds to the volume or weight in a silo with pyramid bottom. The following additional parameters have to be specified:
  – **Unit after linearization (→ 145)**
  – **Maximum value (→ 147)**: Maximum volume or weight
  – **Intermediate height (→ 147)**: The height of the pyramid
- **Conical bottom**
  The output value corresponds to the volume or weight in a tank with conical bottom. The following additional parameters have to be specified:
  – **Unit after linearization (→ 145)**
  – **Maximum value (→ 147)**: Maximum volume or weight
  – **Intermediate height (→ 147)**: The height of the conical part of the tank
- **Angled bottom**
  The output value corresponds to the volume or weight in a silo with an angled bottom. The following additional parameters have to be specified:
  – **Unit after linearization (→ 145)**
  – **Maximum value (→ 147)**: Maximum volume or weight
  – **Intermediate height (→ 147)**: Height of the angled bottom
- **Horizontal cylinder**
  The output value corresponds to the volume or weight in a horizontal cylinder. The following additional parameters have to be specified:
  – **Unit after linearization (→ 145)**
  – **Maximum value (→ 147)**: Maximum volume or weight
  – **Diameter (→ 147)**
- **Sphere**
  The output value corresponds to the volume or weight in a spherical tank. The following additional parameters have to be specified:
  – **Unit after linearization (→ 145)**
  – **Maximum value (→ 147)**: Maximum volume or weight
  – **Diameter (→ 147)**

Unit after linearization

Navigation Setup → Advanced setup → Linearization → Unit after linearization

Prerequisite **Linearization type (→ 144)** ≠ None

Description Select unit of the lineaized value.

Selection

SI units
- STon
- t
- kg
- cm^3
- dm^3
- m^3
- hl
- l
- %
- mm
- m

US units
- lb
- UsGal
- ft^3
- ft
- in

Imperial units
impGal

Custom-specific units
Free text

Factory setting

%

Additional information

The selected unit is only used to be indicated on the display. The measured value is **not** transformed according to the selected unit.

It is also possible to configure a distance-to-distance linearization, i.e. a transformation from the level unit to a different distance unit. To do so, select the **Linear** linearization mode. In order to define the new level unit, select the **Free text** option in the **Unit after linearization** parameter and enter the required unit into the **Free text** parameter (→ 146).

Free text

Navigation

Setup → Advanced setup → Linearization → Free text

Prerequisite

Unit after linearization (→ 145) = Free text

Description

Enter unit symbol.

User entry

Up to 32 alphanumerical characters (letters, numbers, special characters)

Factory setting

Free text

Level linearized

Navigation

Setup → Advanced setup → Linearization → Level linearized

Description

Displays linearized level.

Additional information

The unit is defined by the **Unit after linearization** parameter → 145.

Maximum value

Navigation Setup → Advanced setup → Linearization → Maximum value

Prerequisite **Linearization type (→ 144)** has one of the following values:
- Linear
- Pyramid bottom
- Conical bottom
- Angled bottom
- Horizontal cylinder
- Sphere

Description Linearized value corresponding to a level of 100%.

User entry −50 000.0 to 50 000.0 %

Factory setting 100.0 %

Diameter

Navigation Setup → Advanced setup → Linearization → Diameter

Prerequisite **Linearization type (→ 144)** has one of the following values:
- Horizontal cylinder
- Sphere

Description Diameter of the cylindrical or spherical tank.

User entry 0 to 9 999.999 m

Factory setting 2 m

Additional information The unit is defined in the **Distance unit** parameter (→ 123).

Intermediate height

Navigation Setup → Advanced setup → Linearization → Intermediate height

Prerequisite **Linearization type (→ 144)** has one of the following values:
- Pyramid bottom
- Conical bottom
- Angled bottom

Description Height of the pyramid, conical or angled bottom.

User entry 0 to 200 m

Factory setting 0 m

Additional information

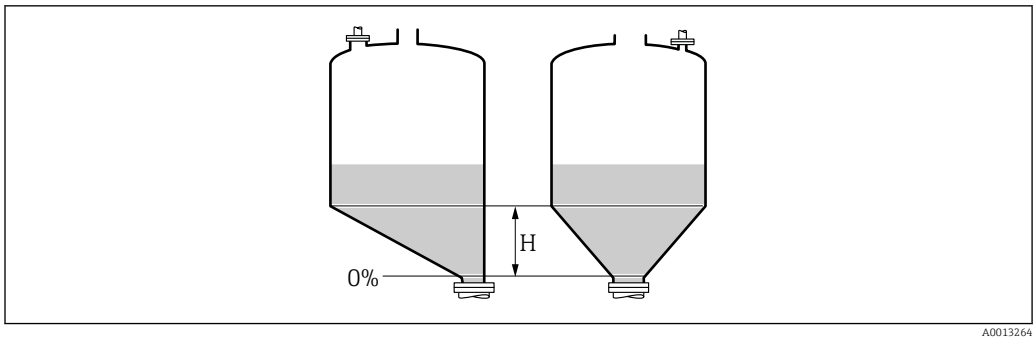

H Intermediate height

The unit is defined in the **Distance unit** parameter (→ 123).

Table mode

Navigation Setup → Advanced setup → Linearization → Table mode

Prerequisite **Linearization type (→ 144) = Table**

Description Select editing mode of the linearization table.

Selection
- Manual
- Semiautomatic
- Clear table
- Sort table

Factory setting Manual

Additional information

Meaning of the options
- **Manual**
  The level and the associated linearized value are entered manually for each linearization point.
- **Semiautomatic**
  The level is measured by the device for each linearization point. The associated linearized value is entered manually.
- **Clear table**
  Deletes the existing linearization table.
- **Sort table**
  Rearranges the linerization points into an ascending order.

Conditions the linearization table must meet:
- The table may consist of up to 32 pairs of values "Level - Linearized Value".
- The table must be monotonic (monotonically increasing or decreasing).
- The first linearization point must refer to the minimum level.
- The last linearization point must refer to the maximum level.

Before entering a linearization table, the values for **Empty calibration (→ 125)** and **Full calibration (→ 125)** must be set correctly.

If values of the table need to be changed after the full or empty calibration have been changed, a correct evaluation is only ensured if the existing table is deleted and the complete table is entered again. To do so delete the existing table (**Table mode (→ 148)** = **Clear table**). Then enter a new table.

How to enter the table

- Via FieldCare
  The table points can be entered via the **Table number (→ 149)**, **Level (→ 149)** and **Customer value (→ 150)** parameters. As an alternative, the graphic table editor may be used: Device Operation → Device Functions → Additional Functions → Linearization (Online/Offline)
- Via local display
  Select the **Edit table** submenu to call up the graphic table editor. The table is displayed and can be edited line by line.

The factory setting for the level unit is "%". If you want to enter the linearization table in physical units, you must select the appropriate unit in the **Level unit** parameter (→ 138) beforehand.

If a decreasing table is entered, the values for 20 mA and 4 mA of the current output are interchanged. That means: 20 mA refers to the lowest level, whereas 4 mA refers to the highest level.

Table number

Navigation Setup → Advanced setup → Linearization → Table number

Prerequisite **Linearization type (→ 144)** = **Table**

Description Select table point you are going to enter or change.

User entry 1 to 32

Factory setting 1

Level (Manual)

Navigation Setup → Advanced setup → Linearization → Level

Prerequisite
- **Linearization type (→ 144)** = Table
- **Table mode (→ 148)** = Manual

Description Enter level value of the table point (value before linearization).

User entry Signed floating-point number

Factory setting 0 %

Level (Semiautomatic)

Navigation Setup → Advanced setup → Linearization → Level

Prerequisite
- **Linearization type (→ 144)** = **Table**
- **Table mode (→ 148)** = **Semiautomatic**

Description Displays measured level (value before linearization). This value is transmitted to the table.

Customer value

Navigation Setup → Advanced setup → Linearization → Customer value

Prerequisite **Linearization type (→ 144)** = **Table**

Description Enter linearized value for the table point.

User entry Signed floating-point number

Factory setting 0 %

Activate table

Navigation Setup → Advanced setup → Linearization → Activate table

Prerequisite **Linearization type (→ 144)** = **Table**

Description Activate (enable) or deactivate (disable) the linearization table.

Selection
- Disable
- Enable

Factory setting Disable

Additional information

Meaning of the options
- **Disable**
  The measured level is not linearized.
  If **Linearization type (→ 144)** = **Table** at the same time, the device issues error message F435.
- **Enable**
  The measured level is linearized according to the table.

When editing the table, the **Activate table** parameter is automatically reset to **Disable** and must be reset to **Enable** after the table has been entered.

"Safety settings" submenu

Navigation Setup → Advanced setup → Safety settings

Output echo lost

Navigation Setup → Advanced setup → Safety settings → Output echo lost

Description Output signal in case of a lost echo.

Selection
- Last valid value
- Ramp at echo lost
- Value echo lost
- Alarm

Factory setting Last valid value

Additional information

Meaning of the options
- **Last valid value**
  The last valid value is kept in the case of a lost echo.
- **Ramp at echo lost** [9]
  In the case of a lost echo the output value is continously shifted towards 0% or 100%. The slope of the ramp is defined in the **Ramp at echo lost** parameter (→ 152).
- **Value echo lost** [9]
  In the case of a lost echo the output assumes the value defined in the **Value echo lost** parameter (→ 151).
- **Alarm**
  In the case of a lost echo the device generates an alarm; see the **Failure mode** parameter (→ 158)

Value echo lost

Navigation Setup → Advanced setup → Safety settings → Value echo lost

Prerequisite **Output echo lost (→ 151)** = **Value echo lost**

Description Output value in case of a lost echo

User entry 0 to 200 000.0 %

Factory setting 0.0 %

Additional information Use the unit which has been defined for the measured value output:
- without linearization: **Level unit (→ 138)**
- with linearization: **Unit after linearization (→ 145)**

9) Only visible if "Linearization type (→ 144)" = "None"

Ramp at echo lost

Navigation Setup → Advanced setup → Safety settings → Ramp at echo lost

Prerequisite **Output echo lost (→ 151) = Ramp at echo lost**

Description Slope of the ramp in the case of a lost echo

User entry Signed floating-point number

Factory setting 0.0 %/min

Additional information

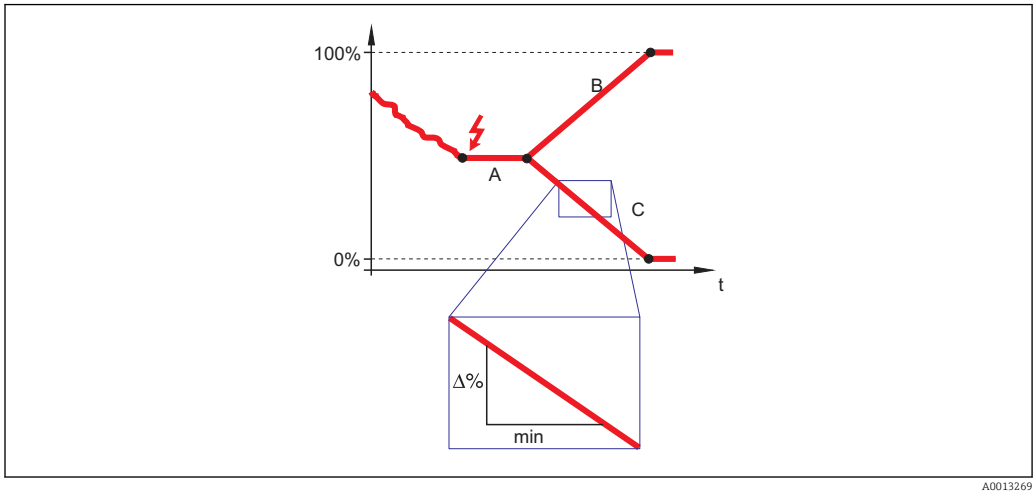

A Delay time echo lost
B Ramp at echo lost (→ 152) (positive value)
C Ramp at echo lost (→ 152) (negative value)

- The unit for the slope of the ramp is "percentage of the measuring range per minute" (%/min).
- For a negative slope of the ramp: The measured value is continuously decreased until it reaches 0%.
- For a positive slope of the ramp: The measured value is continuosly increased until it reaches 100%.

Blocking distance

Navigation Setup → Advanced setup → Safety settings → Blocking distance

Description Specify blocking distance BD.

User entry 0 to 200 m

Factory setting FMR50, FMR51, FMR53, FMR54: antenna length

Additional information Signals in the blocking distance are only evaluated if they have been outside the blocking distance when the device was switched on and move into the blocking distance due to a

level change during operation. Signals which are already in the blocking distance when the device is switched on, are ignored.

This behavior is only valid if the following two conditions are met:
- Expert → Sensor → Echo tracking → Evaluation mode = **Short time history** or **Long time history**
- Expert → Sensor → Gas phase compensation → GPC mode= **On**, **Without correction** or **External correction**

If one of these conditions is not met, signals in the blocking distance will always be ignored.

If required, a different behavior for signals in the blocking distance can be defined by the Endress+Hauser service.

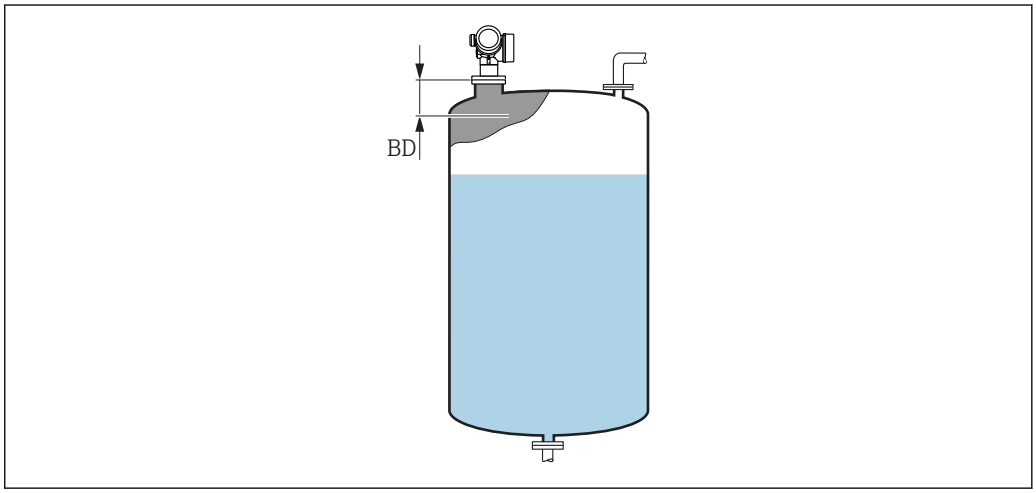

52 *Blocking distance (BD) for liquid measurements*

"SIL/WHG confirmation" wizard

The **SIL/WHG confirmation** wizard is only available for devices with SIL or WHG approval (Feature 590: "Additional Approval", option LA: "SIL" or LC: "WHG overfill prevention") which are currently **not** in the SIL- or WHG-locked state.

The **SIL/WHG confirmation** wizard is required to lock the device according to SIL or WHG. For details refer to the "Functional Safety Manual" of the respective device, which describes the locking procedure and the parameters of the sequence.

Navigation Setup → Advanced setup → SIL/WHG confirmation

"Deactivate SIL/WHG" wizard

The **Deactivate SIL/WHG** wizard (→ 155) is only visible if the device is SIL-locked or WHG-locked. For details refer to the "Functional Safety Manual" of the respective device.

Navigation Setup → Advanced setup → Deactivate SIL/WHG

Reset write protection

Navigation Setup → Advanced setup → Deactivate SIL/WHG → Reset write protection

Description Enter unlocking code.

User entry 0 to 65 535

Factory setting 0

Code incorrect

Navigation Setup → Advanced setup → Deactivate SIL/WHG → Code incorrect

Description Indicates that a wrong unlocking code has been entered. Select procedure.

Selection
- Reenter code
- Abort sequence

Factory setting Reenter code

"Current output 1 to 2" submenu

The **Current output 2** submenu (→ 156) is only available for devices with two current outputs.

Navigation Setup → Advanced setup → Current output 1 to 2

Assign current output 1 to 2

Navigation Setup → Advanced setup → Current output 1 to 2 → Assign current output

Description Select process variable for current output.

Selection
- Level linearized
- Distance
- Electronic temperature
- Relative echo amplitude
- Analog output adv. diagnostics 1
- Analog output adv. diagnostics 2
- Area of incoupling

Factory setting
- Current output 1: Level linearized
- Current output 2 [10]: Level linearized

Additional information *Definition of the current range for the process variables*

Process variable	4 mA value	20 mA value
Level linearized	0 % [1] or the associated linearized value	100 % [2] or the associated linearized value
Distance	0 (i.e. level is at the reference point)	**Empty calibration (→ 125)** (i.e. level is at 0 %)
Electronic temperature	−50 °C (−58 °F)	100 °C (212 °F)
Relative echo amplitude	0 dB	150 dB
Analog output adv. diagnostics 1/2	depending on the parametrization of the Advanced Diagnostics	
Area of incoupling	0	100

1) the 0% level is defined by **Empty calibration** parameter (→ 125)
2) The 100% level is defined by **Full calibration** parameter (→ 125)

It may be necessary to adjust the 4mA and 20mA values to the application (especially in the case of the **Analog output adv. diagnostics 1/2** and **Area of incoupling** options).

This can be done by the following parameters:
- Expert → Output → Current output 1 to 2 → Turn down
- Expert → Output → Current output 1 to 2 → 4 mA value
- Expert → Output → Current output 1 to 2 → 20 mA value

10) only for devices with two current outputs

Current span

Navigation Setup → Advanced setup → Current output 1 to 2 → Current span

Description Determines the current range used to transmit the measured value. '4...20mA': Measured variable: 4 ...20 mA '4...20mA NAMUR': Measured variable: 3.8 ... 20.5 mA '4...20mA US': Measured variable: 3.9 ... 20.8 mA 'Fixed current': Measured variable transmitted via HART only Note: Currents below 3.6 mA or above 21.95 mA can be used to signal an alarm.

Selection
- 4...20 mA
- 4...20 mA NAMUR
- 4...20 mA US
- Fixed current

Factory setting 4...20 mA NAMUR

Additional information *Meaning of the options*

Option	Current range for process variable	Lower alarm signal level	Upper alarm signal level
4...20 mA	4 to 20.5 mA	< 3.6 mA	> 21.95 mA
4...20 mA NAMUR	3.8 to 20.5 mA	< 3.6 mA	> 21.95 mA
4...20 mA US	3.9 to 20.8 mA	< 3.6 mA	> 21.95 mA
Fixed current	Constant current, defined in the **Fixed current** parameter (→ 157).		

- In the case of an error, the output current assumes the value defined in the **Failure mode** parameter (→ 158).
- If the meausred value is out of the measuring range, diagnostic message **Current output** is issued.

In a HART multidrop loop only one device can use the analog current to transmit a signal. For all other devices one must set:
- **Current span** = **Fixed current**
- **Fixed current (→ 157)** = **4 mA**

Fixed current

Navigation Setup → Advanced setup → Current output 1 to 2 → Fixed current

Prerequisite **Current span (→ 157)** = **Fixed current**

Description Define constant value of the output current.

User entry 4 to 22.5 mA

Factory setting 4 mA

Damping output

Navigation Setup → Advanced setup → Current output 1 to 2 → Damping output

Description Reaction time of the output signal on fluctuation in the measured value.

User entry 0.0 to 999.9 s

Factory setting 0.0 s

Additional information Fluctuations of the measured value affect the output current with an exponential delay, the time constant τ of which is defined in this parameter. With a small time constant the output reacts immediately to changes of the measrued value. With a big time constant the reaction of the output is more delayed. For τ = 0 (factory setting) there is no damping.

Failure mode

Navigation Setup → Advanced setup → Current output 1 to 2 → Failure mode

Prerequisite **Current span (→ 157) ≠ Fixed current**

Description Defines which current the output assumes in the case of an error. 'Min.': < 3.6mA 'Max.': > 21.95mA 'Last valid value': Last valid value before occurrence of the error. 'Actual value': Output current is equal to the measured value; error is ignored. 'Defined value': User defined value.

Selection
- Min.
- Max.
- Last valid value
- Actual value
- Defined value

Factory setting Max.

Additional information

Meaning of the options
- **Min.**
  The current output adopts the value of the lower alarm level according to the **Current span** parameter (→ 157).
- **Max.**
  The current output adopts the value of the upper alarm level according to the **Current span** parameter (→ 157).
- **Last valid value**
  The current remains constant at the last value it hat before the error occurred.
- **Actual value**
  The output current follows the actual measured value; the error is ignored.
- **Defined value**
  The output current assumes the value defined in the **Failure current** parameter (→ 159).

The error behavior of other output channels is not influenced by these settings but is defined in separate parameters.

Failure current

Navigation Setup → Advanced setup → Current output 1 to 2 → Failure current

Prerequisite **Failure mode (→ 158)** = **Defined value**

Description Defines which current the output assumes in case of an error.

User entry 3.59 to 22.5 mA

Factory setting 22.5 mA

Output current 1 to 2

Navigation Setup → Advanced setup → Current output 1 to 2 → Output current 1 to 2

Description Shows the actual calculated value of the output current.

"Switch output" submenu

The **Switch output** submenu (→ 160) is only visible for devices with switch output. [11)]

Navigation Setup → Advanced setup → Switch output

Switch output function

Navigation Setup → Advanced setup → Switch output → Switch output function

Description Defines the function of the switch output. 'Off' The switch output is always open (non-conductive) 'On' The switch output is always closed (conductive). 'Diagnostic behavior' The switch output is normally closed and is only opened if a diagnostic event is present. 'Limit' The switch output is normally closed and is only opened if a measured variable exceeds a defined limit. 'Digital output' The switch output is controlled by one of the digital output blocks of the device.

Selection
- Off
- On
- Diagnostic behavior
- Limit
- Digital Output

Factory setting Off

Additional information

Meaning of the options
- **Off**
  The output is always open (non-conductive).
- **On**
  The output is always closed (conductive).
- **Diagnostic behavior**
  The output is normally closed and is only opened if a diagnostic event is present. The **Assign diagnostic behavior** parameter (→ 161) determines for which type of event the output is opened.
- **Limit**
  The output is normally closed and is only opened if a measured variable exceeds or falls below a defined limit. The limit values are defined by the following parameters:
  - **Assign limit (→ 161)**
  - **Switch-on value (→ 162)**
  - **Switch-off value (→ 163)**
- **Digital Output**
  The switching state of the output tracks the output value of a DI function block. The function block is selected in the **Assign status** parameter (→ 161).

The **Off** and **On** options can be used to simulate the switch output.

11) Ordering feature 020 "Power supply; Output", option B, E or G

Assign status

Navigation Setup → Advanced setup → Switch output → Assign status

Prerequisite **Switch output function (→ 160)** = **Digital Output**

Selection
- Off
- Digital output AD 1
- Digital output AD 2

Factory setting Off

Additional information The **Digital output AD 1** and **Digital output AD 2** options refer to the Advanced Diagnostic Blocks. A switch signal generated in these blocks can be transmitted via the switch output.

Assign limit

Navigation Setup → Advanced setup → Switch output → Assign limit

Prerequisite **Switch output function (→ 160)** = **Limit**

Selection
- Off
- Level linearized
- Distance
- Terminal voltage
- Electronic temperature
- Relative echo amplitude
- Area of incoupling

Factory setting Off

Assign diagnostic behavior

Navigation Setup → Advanced setup → Switch output → Assign diagnostic behavior

Prerequisite **Switch output function (→ 160)** = **Diagnostic behavior**

Description Defines to which behavior of diagnostic events the switch output reacts.

Selection
- Alarm
- Alarm or warning
- Warning

Factory setting Alarm

Switch-on value

Navigation Setup → Advanced setup → Switch output → Switch-on value

Prerequisite **Switch output function (→ 160) = Limit**

Description Defines the switch-on point. The output is closed if the assigned process variable rises above this point.

User entry Signed floating-point number

Factory setting 0

Additional information The switching behavior depends on the relative position of the **Switch-on value** and **Switch-off value** parameters:

Switch-on value > Switch-off value
– The output is closed if the measured value is larger than **Switch-on value**.
– The output is opened if the measured value is smaller than **Switch-off value**.

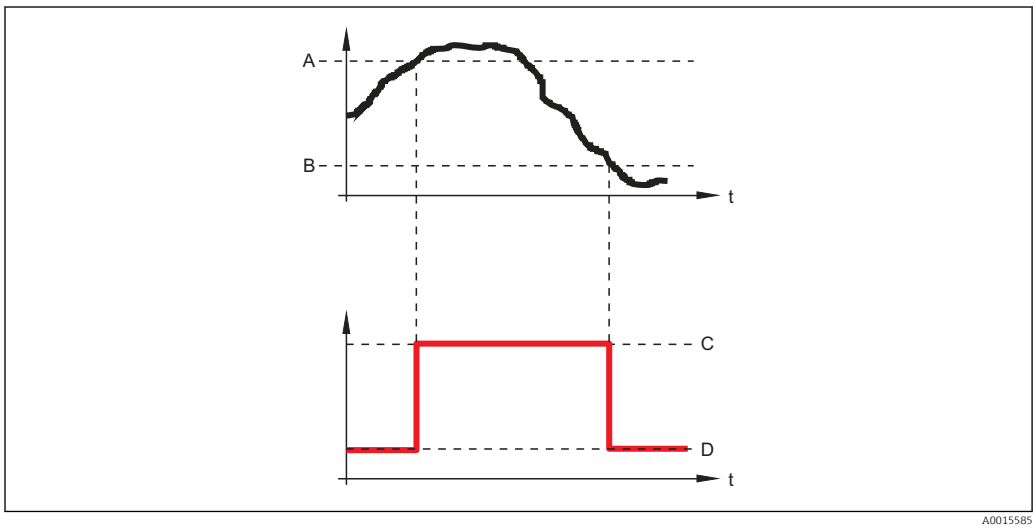

A Switch-on value
B Switch-off value
C Output closed (conductive)
D Output opened (non-conductive)

Switch-on value < Switch-off value
– The output is closed if the measured value is smaller than **Switch-on value**.
– The output is opened if the measured value is larger than **Switch-off value**.

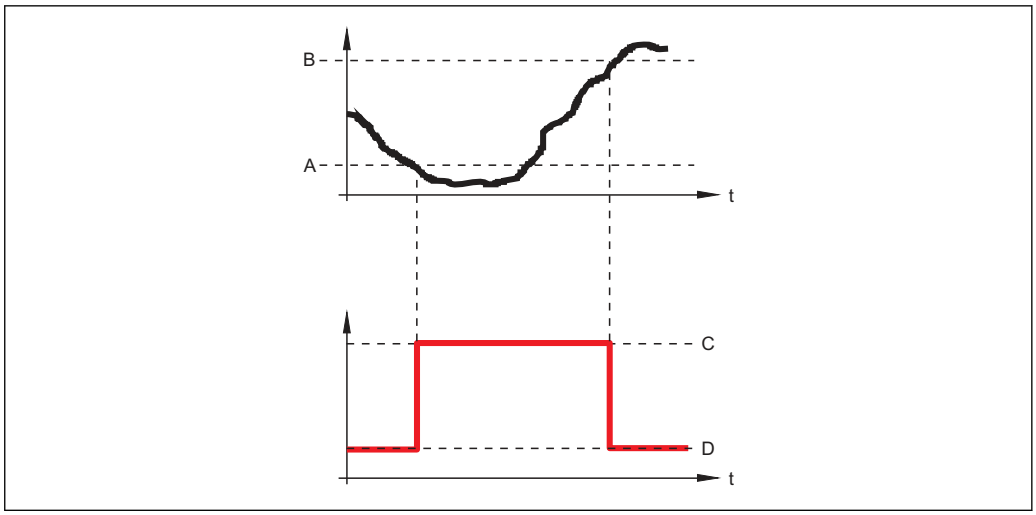

A Switch-on value
B Switch-off value
C Output closed (conductive)
D Output opened (non-conductive)

Switch-on delay

Navigation Setup → Advanced setup → Switch output → Switch-on delay

Prerequisite
- **Switch output function (→ 160) = Limit**
- **Assign limit (→ 161) ≠ Off**

Description Defines the delay applied before the output is switched on.

User entry 0.0 to 100.0 s

Factory setting 0.0 s

Switch-off value

Navigation Setup → Advanced setup → Switch output → Switch-off value

Prerequisite **Switch output function (→ 160) = Limit**

Description Defines the switch-off point. The output is opened if the assigned process variable falls below this point.

User entry Signed floating-point number

Factory setting 0

Additional information The switching behavior depends on the relative position of the **Switch-on value** and **Switch-off value** parameters; description: see the **Switch-on value** parameter (→ 162).

Switch-off delay

Navigation Setup → Advanced setup → Switch output → Switch-off delay

Prerequisite
- **Switch output function (→ 160)** = **Limit**
- **Assign limit (→ 161)** ≠ **Off**

Description Defines the delay applied before the output is switched off.

User entry 0.0 to 100.0 s

Factory setting 0.0 s

Failure mode

Navigation Setup → Advanced setup → Switch output → Failure mode

Prerequisite **Switch output function (→ 160)** = **Limit** or **Digital Output**

Description Defines the state of the switch output in case of an error.

Selection
- Actual status
- Open
- Closed

Factory setting Open

Additional information

Switch status

Navigation Setup → Advanced setup → Switch output → Switch status

Description Current status of the switch output.

Invert output signal

Navigation Setup → Advanced setup → Switch output → Invert output signal

Description 'No' The switch output behaves as per its parameter setting. 'Yes' The switching behavior is inverted as compared to its parameter setting.

Selection
- No
- Yes

Factory setting No

Additional information

Meaning of the options

- **No**
  The behavior of the switch output is as described above.
- **Yes**
  The states **Open** and **Closed** are inverted as compared to the description above.

"Display" submenu

The **Display** submenu is only visible if a display module is connected to the device.

Navigation Setup → Advanced setup → Display

Language

Navigation Setup → Advanced setup → Display → Language

Description Set display language.

Selection
- English
- Deutsch *
- Français *
- Español *
- Italiano *
- Nederlands *
- Portuguesa *
- Polski *
- русский язык (Russian) *
- Svenska *
- Türkçe *
- 中文 (Chinese) *
- 日本語 (Japanese) *
- 한국어 (Korean) *
- Bahasa Indonesia *
- tiếng Việt (Vietnamese) *
- čeština (Czech) *

Factory setting The language selected in feature 500 of the product structure.
If no language has been selected: **English**

Additional information

Format display

Navigation Setup → Advanced setup → Display → Format display

Description Select how measured values are shown on the display.

Selection
- 1 value, max. size
- 1 bargraph + 1 value
- 2 values
- 1 value large + 2 values
- 4 values

Factory setting 1 value, max. size

* Visibility depends on order options or device settings

Additional information

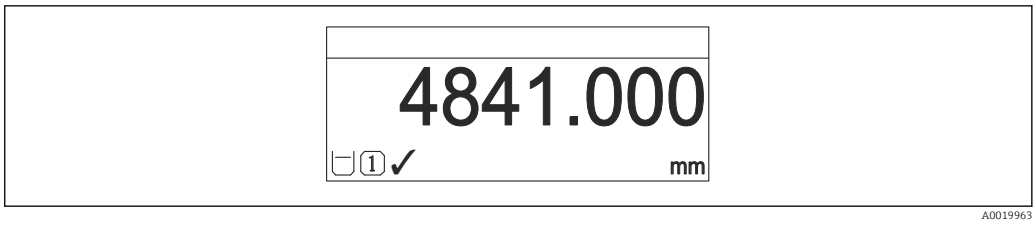

53 *"Format display" = "1 value, max. size"*

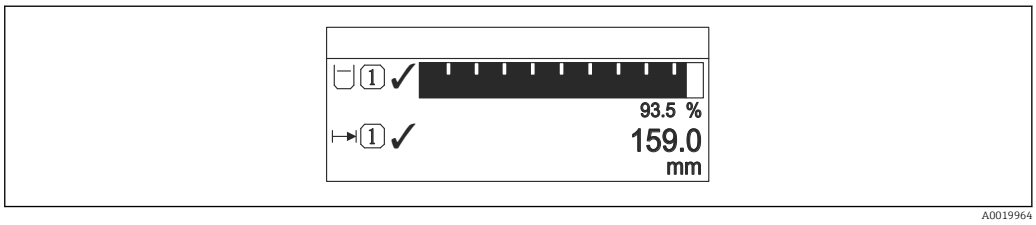

54 *"Format display" = "1 bargraph + 1 value"*

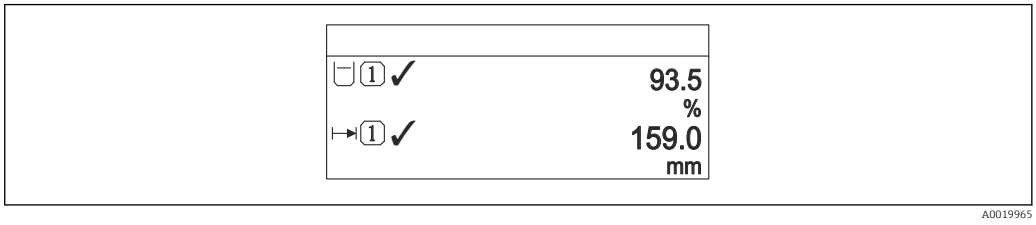

55 *"Format display" = "2 values"*

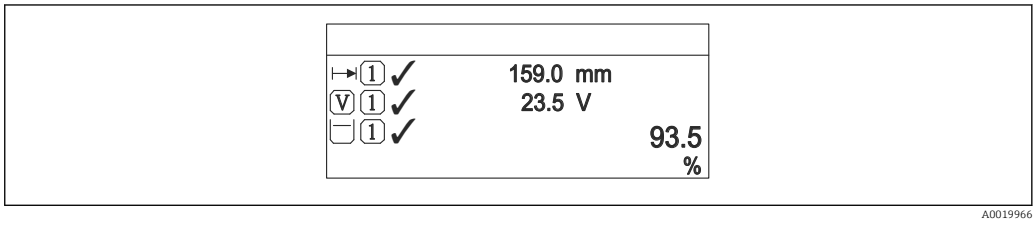

56 *"Format display" = "1 value large + 2 values"*

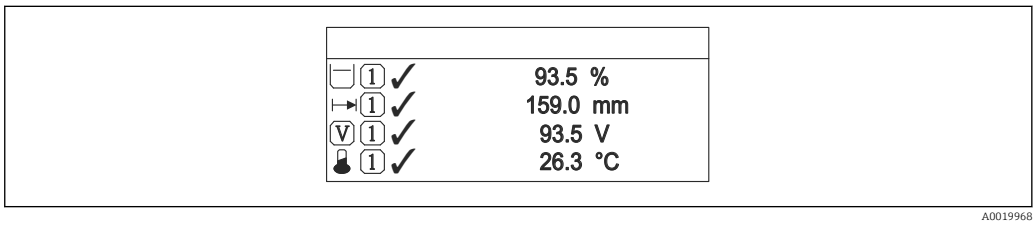

57 *"Format display" = "4 values"*

- The **Value 1 to 4 display** → 168 parameters specify which measured values are shown on the display and in which order.
- If more measured values are specified than the current display mode permits, the values alternate on the device display. The display time until the next change is configured in the **Display interval** parameter (→ 168).

Value 1 to 4 display

Navigation Setup → Advanced setup → Display → Value 1 display

Description Select the measured value that is shown on the local display.

Selection
- Level linearized
- Distance
- Current output 1
- Measured current
- Current output 2 *
- Terminal voltage
- Electronic temperature
- Absolute echo amplitude
- Relative echo amplitude
- Analog output adv. diagnostics 1
- Analog output adv. diagnostics 2
- Area of incoupling

Factory setting
- Value 1 display: Level linearized
- Value 2 display: None
- Value 3 display: None
- Value 4 display: None

Decimal places 1 to 4

Navigation Setup → Advanced setup → Display → Decimal places 1

Description This selection does not affect the measurement and calculation accuracy of the device.

Selection
- x
- x.x
- x.xx
- x.xxx
- x.xxxx

Factory setting x.xx

Additional information The setting does not affect the measuring or computational accuracy of the device.

Display interval

Navigation Setup → Advanced setup → Display → Display interval

Description Set time measured values are shown on display if display alternates between values.

User entry 1 to 10 s

* Visibility depends on order options or device settings

Factory setting 5 s

Additional information This parameter is only relevant if the number of selected measuring values exceeds the number of values the selected display format can display simultaneously.

Display damping

Navigation Setup → Advanced setup → Display → Display damping

Description Set display reaction time to fluctuations in the measured value.

User entry 0.0 to 999.9 s

Factory setting 0.0 s

Header

Navigation Setup → Advanced setup → Display → Header

Description Select header contents on local display.

Selection
- Device tag
- Free text

Factory setting Device tag

Additional information

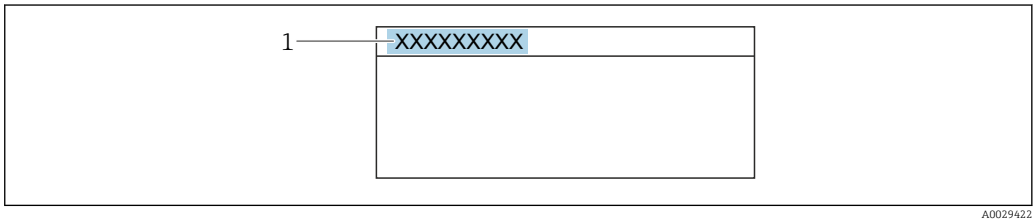

1 Position of the header text on the display

Meaning of the options
- **Device tag**
  Is defined in the **Device tag** parameter (→ 123)
- **Free text**
  Is defined in the **Header text** parameter (→ 169)

Header text

Navigation Setup → Advanced setup → Display → Header text

Prerequisite **Header (→ 169)** = **Free text**

Description Enter display header text.

Factory setting ----------

Additional information The number of characters which can be displayed depends on the characters used.

Separator

Navigation Setup → Advanced setup → Display → Separator

Description Select decimal separator for displaying numerical values.

Selection
- .
- ,

Factory setting .

Number format

Navigation Setup → Advanced setup → Display → Number format

Description Choose number format for the display.

Selection
- Decimal
- ft-in-1/16"

Factory setting Decimal

Additional information The **ft-in-1/16"** option is only valid for distance units.

Decimal places menu

Navigation Setup → Advanced setup → Display → Decimal places menu

Description Select number of decimal places for the representation of numbers within the operating menu.

Selection
- x
- x.x
- x.xx
- x.xxx
- x.xxxx

Factory setting x.xxxx

Additional information

- Is only valid for numbers in the operating menu (e.g. **Empty calibration**, **Full calibration**), but not for the measured value display. The number of decimal places for the measured value display is defined in the **Decimal places 1 to 4** → 168 parameters.
- The setting does not affect the accuracy of the measurement or the calculations.

Backlight

Navigation Setup → Advanced setup → Display → Backlight

Prerequisite The device has the SD03 local display (with optical keys).

Description Switch the local display backlight on and off.

Selection

- Disable
- Enable

Factory setting Disable

Additional information

Meaning of the options

- **Disable**
  Switches the backlight off.
- **Enable**
  Switches the backlight on.

Regardless of the setting in this parameter the backlight may be automatically switched off by the device if the supply voltage is too low.

Contrast display

Navigation Setup → Advanced setup → Display → Contrast display

Description Adjust local display contrast setting to ambient conditions (e.g. lighting or reading angle).

User entry 20 to 80 %

Factory setting Dependent on the display.

Additional information

Setting the contrast via push-buttons:

- Darker: press the ⊖ E buttons simultaneously.
- Brighter: press the ⊕ E buttons simultaneously.

"Configuration backup display" submenu

This submenu is only visible if a display module is connected to the device.

The configuration of the device can be saved to the display module at a certain point of time (backup). The saved configurateion can be restored to the device if required, e.g. in order to bring the device back into a defined state. The configuration can also be transferred to a different device of the same type using the display module.

Navigation Setup → Advanced setup → Configuration backup display

Operating time

Navigation Setup → Advanced setup → Configuration backup display → Operating time

Description Indicates how long the device has been in operation.

Additional information *Maximum time*

9 999 d (≈ 27 years)

Last backup

Navigation Setup → Advanced setup → Configuration backup display → Last backup

Description Indicates when the last data backup was saved to the display module.

Configuration management

Navigation Setup → Advanced setup → Configuration backup display → Configuration management

Description Select action for managing the device data in the display module.

Selection
- Cancel
- Execute backup
- Restore
- Duplicate
- Compare
- Clear backup data

Factory setting Cancel

Additional information

Meaning of the options

- **Cancel**
  No action is executed and the user exits the parameter.
- **Execute backup**
  A backup copy of the current device configuration in the HistoROM (built-in in the device) is saved to the display module of the device.
- **Restore**
  The last backup copy of the device configuration is copied from the display module to the HistoROM of the device.
- **Duplicate**
  The transmitter configuration is duplicated to another device using the transmitter display module. The following parameters, which characterize the individual measuring point are **not** included in the transmitted configuration:
  – HART date code
  – HART short tag
  – HART message
  – HART descriptor
  – HART address
  – Device tag
  – Medium type
- **Compare**
  The device configuration saved in the display module is compared to the current device configuration of the HistoROM. The result of this comparison is displayed in the **Comparison result** parameter (→ 173).
- **Clear backup data**
  The backup copy of the device configuration is deleted from the display module of the device.

While this action is in progress, the configuration cannot be edited via the local display and a message on the processing status appears on the display.

If an existing backup is restored to a different device using the **Restore** option, it may occur that some device functionalities are no longer available. In some cases even a device reset will not restore the original status.

In order to transmit a configuration to a different device, the **Duplicate** option should always be used.

Backup state

Navigation Setup → Advanced setup → Configuration backup display → Backup state

Description Displays which backup action is currently in progress.

Comparison result

Navigation Setup → Advanced setup → Configuration backup display → Comparison result

Description Comparison between present device data and display backup.

Additional information

Meaning of the display options

- **Settings identical**
  The current device configuration of the HistoROM is identical to the backup copy in the display module.
- **Settings not identical**
  The current device configuration of the HistoROM is not identical to the backup copy in the display module.
- **No backup available**
  There is no backup copy of the device configuration of the HistoROM in the display module.
- **Backup settings corrupt**
  The current device configuration of the HistoROM is corrupt or not compatible with the backup copy in the display module.
- **Check not done**
  The device configuration of the HistoROM has not yet been compared to the backup copy in the display module.
- **Dataset incompatible**
  The data sets are incompatible and can not be compared.

To start the comparison, set **Configuration management (→ 172)** = **Compare**.

If the transmitter configuration has been duplicated from a different device by **Configuration management (→ 172)** = **Duplicate**, the new device configuration in the HistoROM is only partially identical to the configuration stored in the display module: Sensor specific properties (e.g. the mapping curve) are not duplicated. Thus, the result of the comparison will be **Settings not identical**.

"Administration" submenu

Navigation Setup → Advanced setup → Administration

Define access code

Navigation Setup → Advanced setup → Administration → Define access code

Description Define release code for write access to parameters.

User entry 0 to 9 999

Factory setting 0

Additional information

If the factory setting is not changed or 0 is defined as the access code, the parameters are not write-protected and the configuration data of the device can then always be modified. The user is logged on in the *Maintenance* role.

The write protection affects all parameters marked with the symbol in this document. On the local display, the symbol in front of a parameter indicates that the parameter is write-protected.

Once the access code has been defined, write-protected parameters can only be modified if the access code is entered in the **Enter access code** parameter (→ 134).

Please contact your Endress+Hauser Sales Center if you lose your access code.

For display operation: The new access code is only valid after it has been confirmed in the **Confirm access code** parameter (→ 177).

Device reset

Navigation Setup → Advanced setup → Administration → Device reset

Description Reset the device configuration - either entirely or in part - to a defined state.

Selection

- Cancel
- To factory defaults
- To delivery settings
- Of customer settings
- To transducer defaults
- Restart device

Factory setting Cancel

Additional information

Meaning of the options

- **Cancel**
  No action
- **To factory defaults**
  All parameters are reset to the order-code specific factory setting.
- **To delivery settings**
  All parameters are reset to the delivery setting. The delivery setting may differ from the factory default if customer specific settings have been ordered.
  This option is only visible if customer specific settings have been ordered.
- **Of customer settings**
  All customer parameters are reset to their factory setting. Service parameters, however, remain unchanged.
- **To transducer defaults**
  Every measurment-related parameter is reset to its factory setting. Service parameters and communication-related parameters, however, remain unchanged.
- **Restart device**
  The restart resets every parameter which is stored in the volatile memory (RAM) to the factory setting (e.g. measured value data). The device configuration remains unchanged.

"Define access code" wizard

The **Define access code** wizard is only available when operating via the local display. When operating via an operating tool, the **Define access code** parameter is located directly in the **Administration** submenu. The **Confirm access code** parameter is not available for operation via operating tool.

Navigation Setup → Advanced setup → Administration → Define access code

Define access code

Navigation Setup → Advanced setup → Administration → Define access code → Define access code

Description → 175

Confirm access code

Navigation Setup → Advanced setup → Administration → Define access code → Confirm access code

Description Confirm the entered access code.

User entry 0 to 9 999

Factory setting 0

17.5 "Diagnostics" menu

Navigation Diagnostics

Actual diagnostics

Navigation Diagnostics → Actual diagnostics

Description Displays current diagnostic message.

Additional information The display consists of:
- Symbol for event behavior
- Code for diagnostic behavior
- Operating time of occurrence
- Event text

If several messages are active at the same time, the messages with the highest priority is displayed.

Information on what is causing the message, and remedy measures, can be viewed via the ⓘ symbol on the display.

Timestamp

Navigation Diagnostics → Timestamp

Description Displays the timestamp for the currently active diagnostic message.

Previous diagnostics

Navigation Diagnostics → Previous diagnostics

Description Displays the last diagnostic message which has been active before the current message.

Additional information The display consists of:
- Symbol for event behavior
- Code for diagnostic behavior
- Operating time of occurrence
- Event text

The condition displayed may still apply. Information on what is causing the message, and remedy measures, can be viewed via the ⓘ symbol on the display.

Timestamp

Navigation Diagnostics → Timestamp

Description Shows the timestamp of the previous diagnostic message.

Operating time from restart

Navigation Diagnostics → Operating time from restart

Description Displays the time the device has been in operation since the last device restart.

Operating time

Navigation Diagnostics → Operating time

Description Indicates how long the device has been in operation.

Additional information *Maximum time*
9 999 d (≈ 27 years)

17.5.1 "Diagnostic list" submenu

Navigation Diagnostics → Diagnostic list

Diagnostics 1 to 5

Navigation Diagnostics → Diagnostic list → Diagnostics 1

Description Display the current diagnostics messages with the highest to fifth-highest priority.

Additional information The display consists of:
- Symbol for event behavior
- Code for diagnostic behavior
- Operating time of occurrence
- Event text

Timestamp 1 to 5

Navigation Diagnostics → Diagnostic list → Timestamp

Description Timestamp of the diagnostic message.

17.5.2 "Event logbook" submenu

The **Event logbook** submenu is only available when operating via the local display. When operating via FieldCare, the event list can be displayed in the FieldCare function "Event List / HistoROM".

Navigation Diagnostics → Event logbook

Filter options

Navigation Diagnostics → Event logbook → Filter options

Description Define which category of event messages is shown in the Events list submenu.

Selection
- All
- Failure (F)
- Function check (C)
- Out of specification (S)
- Maintenance required (M)
- Information (I)

Factory setting All

Additional information
- This parameter is only used for operation via the local display.
- The status signals are categorized according to NAMUR NE 107.

"Event list" submenu

The **Event list** submenu displays the history of past events of the category selected in the **Filter options** parameter (→ 181). A maximum of 100 events are displayed in chronological order.

The following symbols indicate whether an event has occurred or has ended:
- : Event has occurred
- : Event has ended

Information on what is causing the message, and remedy instructions, can be viewed via the ⓘ-button.

Display format
- For event messages in category I: information event, event text, "recording event" symbol and time the event occurred
- For event messages in category F, M, C, S (status signal): diagnostics event, event text, "recording event" symbol and time the event occurred

Navigation Diagnostics → Event logbook → Event list

17.5.3 "Device information" submenu

Navigation Diagnostics → Device information

Device tag

Navigation Diagnostics → Device information → Device tag

Description Enter the name for the measuring point.

Factory setting FMR5x

Serial number

Navigation Diagnostics → Device information → Serial number

Description Shows the serial number of the measuring device.

Additional information

Uses of the serial number
- To identify the device quickly, e.g. when contacting Endress+Hauser.
- To obtain specific information on the device using the Device Viewer: www.endress.com/deviceviewer

The serial number is also indicated on the nameplate.

Firmware version

Navigation Diagnostics → Device information → Firmware version

Description Shows the device firmware version installed.

User interface xx.yy.zz

Additional information For firmware versions differing only in the last two digits ("zz") there is no difference concerning functionality or operation.

Device name

Navigation Diagnostics → Device information → Device name

Description Shows the name of the transmitter.

Order code

Navigation Diagnostics → Device information → Order code

Description Shows the device order code.

Additional information The order code is generated from the extended roder code, which defines all device features of the product structure. In contrast, the device features can not be read directly from the order code.

Extended order code 1 to 3

Navigation Diagnostics → Device information → Extended order code 1

Description Display the three parts of the extended order code.

Additional information The extended order code indicates the version of all the features of the product structure and thus uniquely identifies the device.

Device revision

Navigation Diagnostics → Device information → Device revision

Description Shows the device revision with which the device is registered with the HART Communication Foundation.

Additional information The device revision is used to allocate the correct Device Description file (DD) to the device.

Device ID

Navigation Diagnostics → Device information → Device ID

Description Shows the device ID for identifying the device in a HART network.

Additional information In addition to the Device type and Manufacturer ID, the Device ID is part of the unique device identification (Unique ID) which characterizes each HART device unambiguously.

Device type

Navigation Diagnostics → Device information → Device type

Description Shows the device type with which the measuring device is registered with the HART Communication Foundation.

Additional information The device type is needed to allocate the suitable Device Description (DD) to the device.

Manufacturer ID

Navigation Diagnostics → Device information → Manufacturer ID

Description Use this function to view the manufacturer ID with which the measuring device is registered with the HART Communication Foundation.

User interface 2-digit hexadecimal number

Factory setting 0x11 (for Endress+Hauser)

17.5.4 "Measured values" submenu

Navigation Diagnostics → Measured values

Distance

Navigation Diagnostics → Measured values → Distance

Description Displays the measured distance D between the reference point (lower edge of the flange or threaded connection) and the level.

Additional information

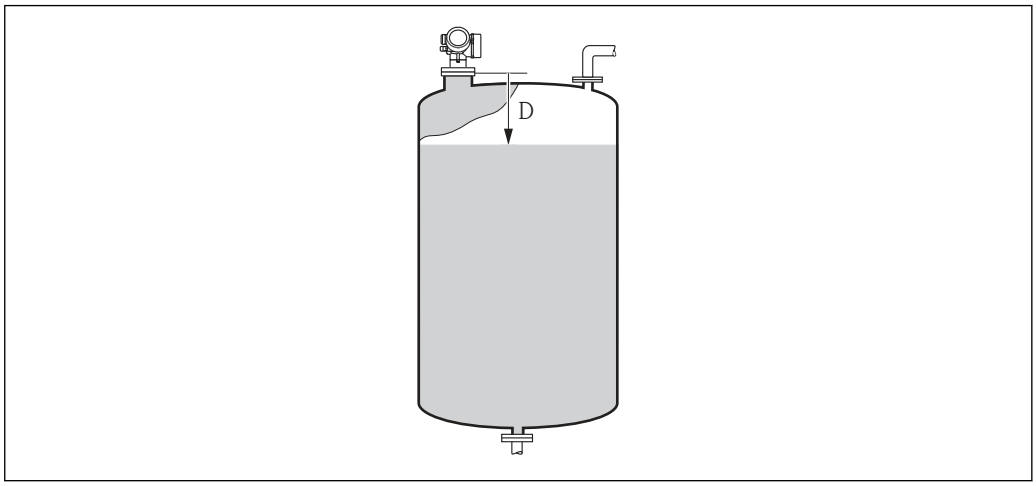

58 *Distance for liquid measurements*

The unit is defined in the **Distance unit** parameter (→ 123).

Level linearized

Navigation Diagnostics → Measured values → Level linearized

Description Displays linearized level.

Additional information The unit is defined by the **Unit after linearization** parameter → 145.

Output current 1 to 2

Navigation Diagnostics → Measured values → Output current 1 to 2

Description Shows the actual calculated value of the output current.

Measured current 1

Navigation Diagnostics → Measured values → Measured current 1

Prerequisite Only available for current output 1

Description Shows the current value of the current output which is currently measured.

Terminal voltage 1

Navigation Diagnostics → Measured values → Terminal voltage 1

Description Shows the current terminal voltage that is applied at the output.

Electronic temperature

Navigation Diagnostics → Measured values → Electronic temperature

Description Displays the current temperature of the electronics.

Additional information The unit is defined in the **Temperature unit** parameter.

17.5.5 "Data logging" submenu

Navigation Diagnostics → Data logging

Assign channel 1 to 4

Navigation Diagnostics → Data logging → Assign channel 1 to 4

Description Assign a process variable to logging channel.

Selection
- Off
- Level linearized
- Distance
- Current output 1
- Measured current
- Current output 2 *
- Terminal voltage
- Electronic temperature
- Absolute echo amplitude
- Relative echo amplitude
- Area of incoupling
- Analog output adv. diagnostics 1
- Analog output adv. diagnostics 2

Factory setting Off

Additional information A total of 1000 measured values can be logged. This means:
- 1000 data points if 1 logging channel is used
- 500 data points if 2 logging channels are used
- 333 data points if 3 logging channels are used
- 250 data points if 4 logging channels are used

If the maximum number of data points is reached, the oldest data points in the data log are cyclically overwritten in such a way that the last 1000, 500, 333 or 250 measured values are always in the log (ring memory principle).

The logged data are deleted if a new option is selected in this parameter.

Logging interval

Navigation Diagnostics → Data logging → Logging interval
Diagnostics → Data logging → Logging interval

Description Define the logging interval tlog for data logging. This value defines the time interval between the individual data points in the memory.

User entry 1.0 to 3 600.0 s

* Visibility depends on order options or device settings

Factory setting 30.0 s

Additional information This parameter defines the interval between the individual data points in the data log, and thus the maximum loggable process time T_{log}:

- If 1 logging channel is used: $T_{log} = 1000 \cdot t_{log}$
- If 2 logging channels are used: $T_{log} = 500 \cdot t_{log}$
- If 3 logging channels are used: $T_{log} = 333 \cdot t_{log}$
- If 4 logging channels are used: $T_{log} = 250 \cdot t_{log}$

Once this time elapses, the oldest data points in the data log are cyclically overwritten such that a time of T_{log} always remains in the memory (ring memory principle).

The logged data are deleted if this parameter is changed.

Example

When using 1 logging channel
- $T_{log} = 1000 \cdot 1\ s = 1\,000\ s \approx 16.5\ min$
- $T_{log} = 1000 \cdot 10\ s = 1\,000\ s \approx 2.75\ h$
- $T_{log} = 1000 \cdot 80\ s = 80\,000\ s \approx 22\ h$
- $T_{log} = 1000 \cdot 3\,600\ s = 3\,600\,000\ s \approx 41\ d$

Clear logging data

Navigation
Diagnostics → Data logging → Clear logging data
Diagnostics → Data logging → Clear logging data

Description Clear the entire logging data.

Selection
- Cancel
- Clear data

Factory setting Cancel

"Display channel 1 to 4" submenu

The **Display channel 1 to 4** submenus are only available for operation via the local display. When operating via FieldCare, the logging diagram can be displayed in the FieldCare function "Event List / HistoROM" .

The **Display channel 1 to 4** submenus invoke a diagram of the logging history of the respective channel.

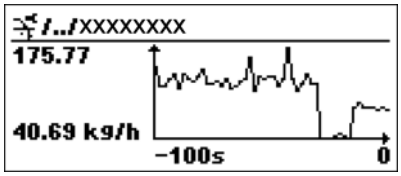

- x-axis: depending on the number of selected channels, 250 to 1000 measured values of a process variable are displayed.
- y-axis: covers the approximate measured value span and constantly adapts this to the measurement.

To return to the operating menu, press ⊞ and ⊟ simultaneaously.

Navigation Diagnostics → Data logging → Display channel 1 to 4

17.5.6 "Simulation" submenu

The **Simulation** submenu is used to simulate specific measuring values or other conditions. This helps to check the correct configuration of the device and connected control units.

Conditions which can be simulated

Condition to be simulated	Associated parameters
Specific value of a process variable	▪ Assign measurement variable (→ 192) ▪ Process variable value (→ 192)
Specific value of the output current	▪ Current output simulation (→ 192) ▪ Value current output (→ 193)
Specific state of the switch output	▪ Switch output simulation (→ 193) ▪ Switch status (→ 193)
Existence of an alarm	Device alarm simulation (→ 194)

Structure of the submenu

Navigation Expert → Diagnostics → Simulation

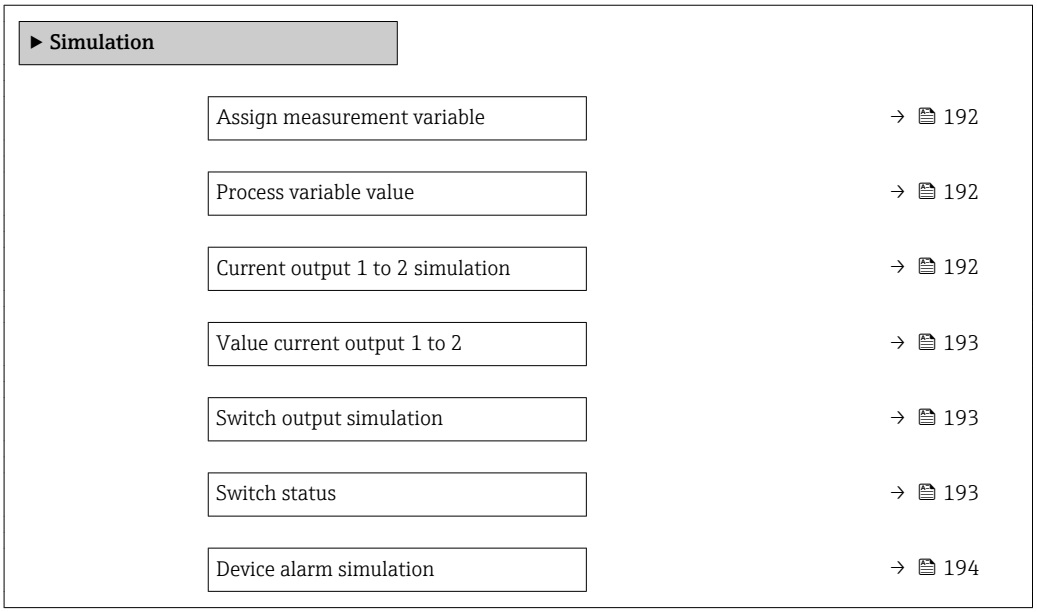

Description of parameters

Navigation Expert → Diagnostics → Simulation

Assign measurement variable

Navigation Expert → Diagnostics → Simulation → Assign measurement variable

Selection
- Off
- Level
- Level linearized

Factory setting Off

Additional information
- The value of the variable to be simulated is defined in the **Process variable value** parameter (→ 192).
- If **Assign measurement variable ≠ Off**, a simulation is active. This is indicated by a diagnotic message of the *Function check (C)* category.

Process variable value

Navigation Expert → Diagnostics → Simulation → Process variable value

Prerequisite **Assign measurement variable (→ 192) ≠ Off**

User entry Signed floating-point number

Factory setting 0

Additional information Downstream measured value processing and the signal output use this simulation value. In this way, users can verify whether the measuring device has been configured correctly.

Current output 1 to 2 simulation

Navigation Expert → Diagnostics → Simulation → Current output 1 to 2 simulation

Description Switch the simulation of the current output on and off.

Selection
- Off
- On

Factory setting Off

Additional information An active simulation is indicated by a diagnostic message of the *Function check (C)* category.

Value current output 1 to 2

Navigation Expert → Diagnostics → Simulation → Value current output 1 to 2

Prerequisite **Current output simulation (→ 192) = On**

Description Defines the value of the simulated output current.

User entry 3.59 to 22.5 mA

Factory setting 3.59 mA

Additional information The current output assumes the value specified in this parameter. In this way, users can verify the correct adjustment of the current output and the correct function of connected control units.

Switch output simulation

Navigation Expert → Diagnostics → Simulation → Switch output simulation

Description Switch the simulation of the switch output on and off.

Selection
- Off
- On

Factory setting Off

Switch status

Navigation Expert → Diagnostics → Simulation → Switch status

Prerequisite **Switch output simulation (→ 193) = On**

Description Current status of the switch output.

Selection
- Open
- Closed

Factory setting Open

Additional information The switch status assumes the value defined in this parameter. This helps to check correct operation of connected control units.

Device alarm simulation

Navigation Expert → Diagnostics → Simulation → Device alarm simulation

Description Switch the device alarm on and off.

Selection
- Off
- On

Factory setting Off

Additional information When selecting the **On** option, the device generates an alarm. This helps to check the correct output behavior of the device in the case of an alarm.

An active simulation is indicated by the diagnostic message **C484 Failure mode simulation**.

Diagnostic event simulation

Navigation Expert → Diagnostics → Simulation → Diagnostic event simulation

Description Select the diagnostic event to be simulated. Note: To terminate the simulation, select 'Off'.

Factory setting Off

Additional information When operated via the local display, the selection list can be filtered according to the event categories (**Diagnostic event category** parameter).

17.5.7 "Device check" submenu

Navigation Diagnostics → Device check

Start device check

Navigation Diagnostics → Device check → Start device check

Description Start a device check.

Selection
- No
- Yes

Factory setting No

Additional information In the case of a lost echo a device check can not be performed.

Result device check

Navigation Diagnostics → Device check → Result device check

Description Displays the result of the device check.

Additional information

Meaning of the display options
- **Installation ok**
  Measurement possible without restrictions.
- **Accuracy reduced**
  A measurement is possible. However, the measuring accuracy may be reduced due to the signal amplitudes.
- **Measurement capability reduced**
  A measurement is currently possible. Howerver, there is the risk of an echo loss. Check the mounting position of the device and the dielectric constant of the medium.
- **Check not done**
  No device check has been performed.

Last check time

Navigation Diagnostics → Device check → Last check time

Description Displays the operating time at which the last device check has been performed.

Level signal

Navigation Diagnostics → Device check → Level signal

Prerequisite Device check has been performed.

Description Displays result of the device check for the level signal.

User interface
- Check not done
- Check not OK
- Check OK

Additional information For **Level signal** = **Check not OK**: Check the mounting position of the device and the dielectric constant of the medium.

17.5.8 "Heartbeat" submenu

The **Heartbeat** submenu is only available via **FieldCare** or **DeviceCare**. It contains the wizards which are part of the **Heartbeat Verification** and **Heartbeat Monitoring** application packages.

Detailed description
SD01871F

Navigation Diagnostics → Heartbeat

Index

A

Access authorization to parameters
- Read access . . . 56
- Write access . . . 56

Access code . . . 56
- Incorrect input . . . 56

Access status display (Parameter) . . . 134
Access status tooling (Parameter) . . . 133
Accessories
- Communication specific . . . 102
- Service specific . . . 103

Activate table (Parameter) . . . 150
Actual diagnostics (Parameter) . . . 178
Administration (Submenu) . . . 175
Advanced process conditions (Parameter) . . . 137
Advanced setup (Submenu) . . . 133
Application . . . 10
- Residual risk . . . 10

Assign channel 1 to 4 (Parameter) . . . 187
Assign current output (Parameter) . . . 156
Assign diagnostic behavior (Parameter) . . . 161
Assign limit (Parameter) . . . 161
Assign measurement variable (Parameter) . . . 192
Assign status (Parameter) . . . 161

B

Backlight (Parameter) . . . 171
Backup state (Parameter) . . . 173
Blocking distance (Parameter) . . . 138, 152
Bluetooth® wireless technology . . . 52

C

CE mark . . . 11
Cleaning . . . 94
Clear logging data (Parameter) . . . 188
Code incorrect (Parameter) . . . 155
Comparison result (Parameter) . . . 173
Configuration backup display (Submenu) . . . 172
Configuration management (Parameter) . . . 172
Configuration of a level measurement . . . 76
Confirm access code (Parameter) . . . 177
Confirm distance (Parameter) . . . 127, 131
Context menu . . . 67
Contrast display (Parameter) . . . 171
Current output 1 to 2 (Submenu) . . . 156
Current output 1 to 2 simulation (Parameter) . . . 192
Current span (Parameter) . . . 157
Customer value (Parameter) . . . 150

D

Damping output (Parameter) . . . 158
Data logging (Submenu) . . . 187
DD . . . 69
Deactivate SIL/WHG (Wizard) . . . 155
Decimal places 1 (Parameter) . . . 168
Decimal places menu (Parameter) . . . 170
Declaration of Conformity . . . 11
Define access code . . . 56
Define access code (Parameter) . . . 175, 177
Define access code (Wizard) . . . 177
Designated use . . . 10
Device alarm simulation (Parameter) . . . 194
Device check (Submenu) . . . 195
Device Descriptions . . . 69
Device ID (Parameter) . . . 183
Device information (Submenu) . . . 182
Device name (Parameter) . . . 182
Device replacement . . . 95
Device reset (Parameter) . . . 175
Device revision (Parameter) . . . 183
Device tag (Parameter) . . . 123, 182
Device type (Parameter) . . . 184
Diagnostic event
- In the operating tool . . . 88

Diagnostic event simulation (Parameter) . . . 194
Diagnostic events . . . 85
Diagnostic list . . . 89
Diagnostic list (Submenu) . . . 180
Diagnostic message . . . 85
Diagnostics
- Symbols . . . 85

Diagnostics (Menu) . . . 178
Diagnostics 1 (Parameter) . . . 180
Diagnostics event . . . 86
Diameter (Parameter) . . . 147
DIP switch
- see Write protection switch

Display (Submenu) . . . 166
Display and operating module FHX50 . . . 51
Display channel 1 to 4 (Submenu) . . . 189
Display damping (Parameter) . . . 169
Display interval (Parameter) . . . 168
Display module . . . 61
Display symbols for submenus . . . 62
Display symbols for the locking state . . . 62
Disposal . . . 96
Distance (Parameter) . . . 126, 131, 185
Distance unit (Parameter) . . . 123
Document
- Function . . . 5

Document function . . . 5

E

Electronic temperature (Parameter) . . . 186
Electronics housing
- Design . . . 16

Empty calibration (Parameter) . . . 125
Enter access code (Parameter) . . . 134
Envelope curve display . . . 68
Event history . . . 91
Event level
- Explanation . . . 85

Symbols 85
Event list (Submenu) 181
Event logbook (Submenu) 181
Event text 86
Events list 91
Extended order code 1 (Parameter) 183
Exterior cleaning 94

F
Failure current (Parameter) 159
Failure mode (Parameter) 158, 164
FHX50 51
Filter options (Parameter) 181
Filtering the event logbook 92
Firmware version (Parameter) 182
Fixed current (Parameter) 157
Format display (Parameter) 166
Free text (Parameter) 146
Full calibration (Parameter) 125
FV (HART device variable) 69

H
Hardware write protection 57
HART device variables 69
HART integration 69
HART protocol 53
Header (Parameter) 169
Header text (Parameter) 169
Heartbeat (Submenu) 197
Housing
Design 16
Turning 33

I
Input mask 65
Intermediate height (Parameter) 147
Invert output signal (Parameter) 164

K
Keypad lock
Disabling 60
Switching on 60

L
Language (Parameter) 166
Last backup (Parameter) 172
Last check time (Parameter) 195
Level (Parameter) 126, 149, 150
Level (Submenu) 135
Level correction (Parameter) 139
Level linearized (Parameter) 146, 185
Level measurement configuration 76
Level signal (Parameter) 196
Level unit (Parameter) 138
Linearization (Submenu) 142, 143, 144
Linearization type (Parameter) 144
Local display 50
see Diagnostics message
see In alarm condition
Locking status (Parameter) 133
Logging interval (Parameter) 187

M
Maintenance 94
Manage device configuration 80
Manufacturer ID (Parameter) 184
Mapping (Wizard) 131
Mapping end point (Parameter) 129, 131
Max. draining speed liquid (Parameter) 136
Max. filling speed liquid (Parameter) 136
Maximum value (Parameter) 147
Measured current 1 (Parameter) 186
Measured materials 10
Measured value symbols 63
Measured values (Submenu) 185
Medium group (Parameter) 124
Medium property (Parameter) 135
Medium type (Parameter) 135
Menu
Diagnostics 178
Setup 123

N
Number format (Parameter) 170

O
Operating elements
Diagnostics message 86
Operating module 61
Operating time (Parameter) 172, 179
Operating time from restart (Parameter) 179
Operational safety 11
Order code (Parameter) 183
Output current 1 to 2 (Parameter) 159, 185
Output echo lost (Parameter) 151
Overvoltage protection
General information 46

P
Prepare recording map (Parameter) 131
Present mapping (Parameter) 129
Previous diagnostics (Parameter) 178
Process variable value (Parameter) 192
Product safety 11
PV (HART device variable) 69

R
Ramp at echo lost (Parameter) 152
Read access 56
Record map (Parameter) 129, 131
Registered trademarks 9
Remedial measures
Calling up 87
Closing 87
Remote operation 53
Repair concept 95
Replacing a device 95
Requirements for personnel 10
Reset write protection (Parameter) 155
Result device check (Parameter) 195

Return 96

S
Safety instructions
Basic 10
Safety Instructions (XA) 12
Safety settings (Submenu) 151
Separator (Parameter) 170
Serial number (Parameter) 182
Service interface (CDI) 53
Setting the operating language 75
Settings
Manage device configuration 80
Operating language 75
Setup (Menu) 123
Signal quality (Parameter) 127
SIL/WHG confirmation (Wizard) 154
Simulation (Submenu) 191, 192
Spare parts 96
Nameplate 96
Start device check (Parameter) 195
Status signals 62, 85
Submenu
Administration 175
Advanced setup 133
Configuration backup display 172
Current output 1 to 2 156
Data logging 187
Device check 195
Device information 182
Diagnostic list 180
Display 166
Display channel 1 to 4 189
Event list 181
Event logbook 181
Events list 91
Heartbeat 197
Level 135
Linearization 142, 143, 144
Measured values 185
Safety settings 151
Simulation 191, 192
Switch output 160
SV (HART device variable) 69
Switch output (Submenu) 160
Switch output function (Parameter) 160
Switch output simulation (Parameter) 193
Switch status (Parameter) 164, 193
Switch-off delay (Parameter) 164
Switch-off value (Parameter) 163
Switch-on delay (Parameter) 163
Switch-on value (Parameter) 162
Symbols
For correction 65
In the text and numeric editor 65
System components 104

T
Table mode (Parameter) 148
Table number (Parameter) 149
Tank type (Parameter) 123
Tank/silo height (Parameter) 139
Terminal voltage 1 (Parameter) 186
Timestamp (Parameter) 178, 179, 180
Transmitter
Turning the display 34
Turning the display module 34
Transmitter housing
Turning 33
Trouble shooting 82
Tube diameter (Parameter) 124
Turning the display 34
Turning the display module 34
TV (HART device variable) 69

U
Unit after linearization (Parameter) 145

V
Value 1 display (Parameter) 168
Value current output 1 to 2 (Parameter) 193
Value echo lost (Parameter) 151

W
W@M Device Viewer 96
Wizard
Deactivate SIL/WHG 155
Define access code 177
Mapping 131
SIL/WHG confirmation 154
Workplace safety 11
Write access 56
Write protection
Via access code 56
Via write protection switch 57
Write protection switch 57

Z
Zubehör
Gerätespezifisch 97



www.addresses.endress.com

Endress+Hauser

People for Process Automation