

Driving Expander Technology

Atlas Copco Gas and Process Solutions

HANDLE THE PRESSURE

HANDLE THE PRESSURE

We know you're no stranger to pressure.
Budget pressure. Time pressure. Performance pressure.

Pressure challenges us, but it also pushes us to be better. At Atlas Copco Gas and Process, the pressures you face are what drive us to develop turbomachinery that assures reliability, improves efficiency and reduces cost. To us, pressure is innovation in progress.



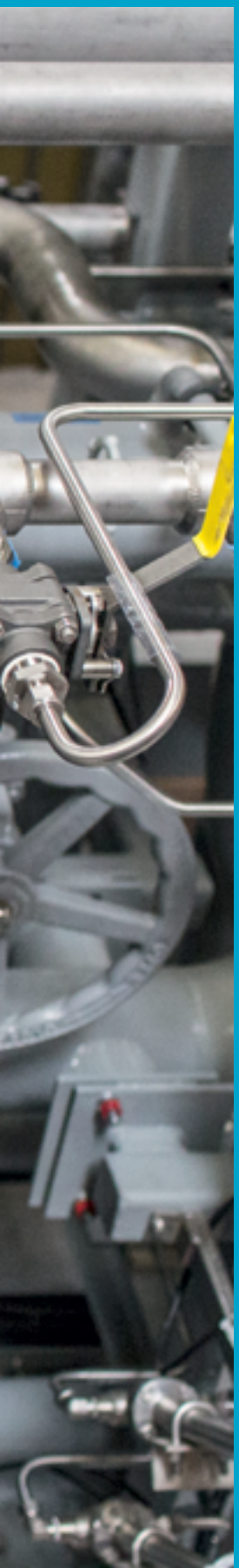

CONTENTS

Overview	05
Markets served	06
Expander Compressors	08
Expander Generators	10
Design Features	12
Production and Design	14
Maintenance and Upgrades	16
Standardized Solutions	18
Product and Applications at a Glance	20
Energy Recovery Applications	22
Refrigeration Applications	26

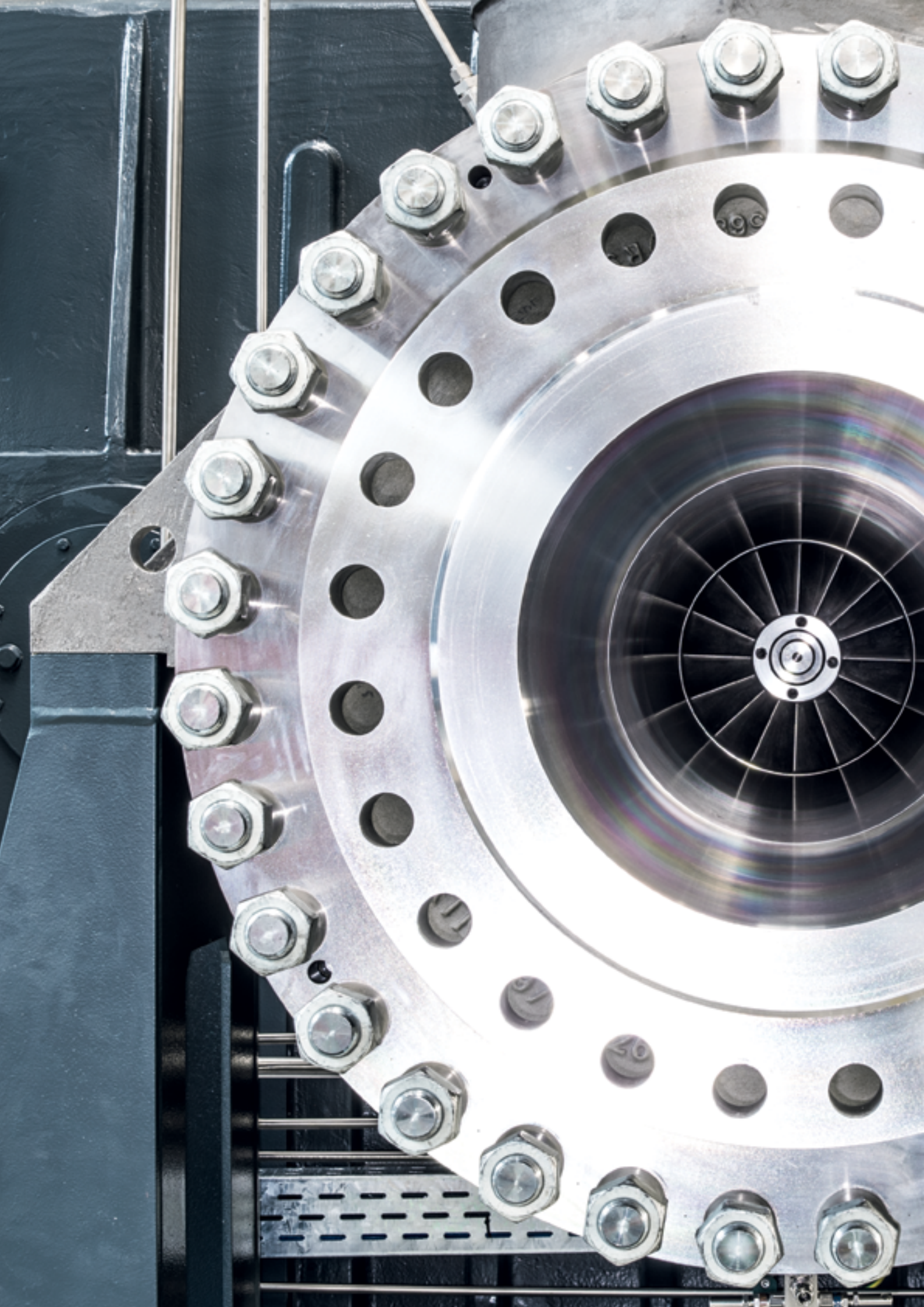

HARNESS THE POWER OF GAS EXPANSION

Atlas Copco Gas and Process has over eight decades of in-house experience in developing and designing reliable, highly-efficient turboexpanders. These expanders put the cold-producing qualities of gas expansion and its power potential to work in your process – in applications ranging from gas processing and LNG liquefaction to power generation and petrochemicals.

Extra cold, additional power

Converting high pressure gas into low pressure gas is simple: valves and orifices do it all the time. But converting the pressure drop into the maximum temperature drop and the maximum shaft torque with high reliability is a challenge at which only a few can excel.

At Atlas Copco, our experience with expansion turbines began with our first patent application in 1936. It continues today through decades of turboexpander innovation, continually improving upon their efficiency and reliability.

Unlike the isenthalpic pressure drop of a conventional throttling or pressure reduction valve, where the potential power and temperature drop are not put to work, a turboexpander exploits the pressure change with efficiencies reaching 90%, drawing additional energy out of the pressure change and out of the gas.

The result is colder temperatures – vital to the process – but also additional available shaft power that can be re-used in the process chain.

Driving the technology further

From initial uses in the industrial gases sector, turboexpanders have become a mainstay in many gas processing, petrochemical and energy recovery applications.

Whether you are interested in one of turboexpanders' established applications or branching out into a new application field, our specialists are ready to assist.

Backed by decades of experience

Our unique role as a complete, "flange-to-flange" turboexpander manufacturer ensures that we know expansion technology inside and out.

+80 YEARS
of experience as a turboexpander specialist

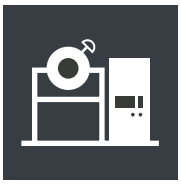

+5 000
references of installed turboexpanders worldwide



MEET ALL STANDARDS
industry standards (API and ANSI), international standards (ARH, CRN, GOST, China Vessel, etc.) and corporate standards

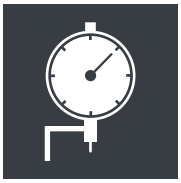

IN-HOUSE EXPERTISE
we handle the product chain, from design and manufacturing to testing, delivery and maintenance.



DESIGNED FOR YOUR PROCESS: OUR SOLUTIONS ACROSS KEY INDUSTRIES

Atlas Copco turboexpanders function as "power exchangers," recovering energy in a pressurized gas mixture while making it colder and releasing pressure. These dual capabilities – refrigeration and rotary power – have made turboexpansion technology essential for applications in several markets. See some of the processes that our turboexpanders can drive in your industry.

Applications relying on turboexpanders' cooling potential

Gas processing

Atlas Copco turboexpanders are the go-to solution for many gas processing applications, from dew point control and gas conditioning to natural gas liquids recovery.

Gas processing applications include:

- Pipeline dew point control
- Gas preconditioning
- Cryogenic Natural Gas Liquid (NGL) recovery
- Ethane recovery / rejection

Petrochemicals /chemicals

Few markets are as complex as chemicals and petrochemicals. Turboexpanders play central roles in the cryogenic separation portions of many processes, especially in producing plastic feedstocks.

Petrochemical applications include:

- Ethylene / olefin production
- Propane / butane dehydrogenation (PDH / BDH)
- Hydrogen recovery
- Carbon-monoxide reduction and processing

Liquid natural gas (LNG)

Our turboexpanders play vital roles in LNG production and transportation at nearly every point of the value chain. They are found in LNG terminals, liquefaction plants and onboard shipping vessels.

LNG applications include:

- Nitrogen / methane reverse Brayton-cycle refrigeration for base load / peak-shaving
- FPSO / FLNG cryogenic liquefaction
- Small and mid-scale LNG
- On-ship reliquefaction
- Ethane recovery / rejection



A turboexpander for cryogenic hydrocarbon separation.



Applications using turboexpanders' capability to generate power

Energy power generation

Using the heat or pressure from natural or man-made sources, Atlas Copco generator-loaded turboexpanders create valuable electricity that can create additional review streams or be employed within a plant to reduce costs.

Power generation application include:

- Geothermal using Organic Rankine Cycle
- Pipeline natural gas pressure letdown
- Waste heat to power, cold to power using Organic Rankine Cycle
- Compressed air energy storage (CAES)
- Liquid air energy storage (LAES)



Generating electricity from geothermal heat.

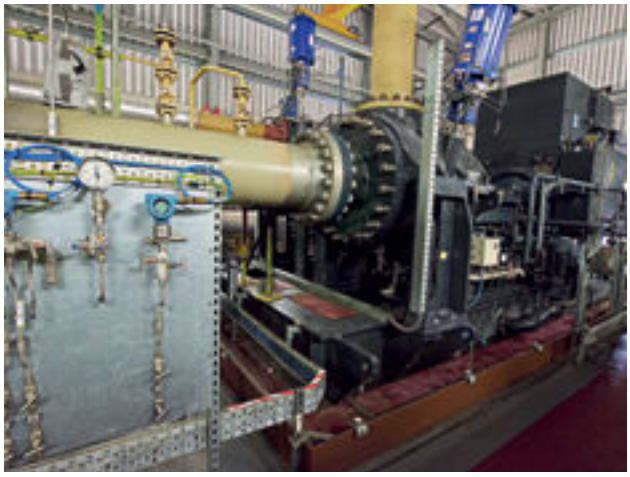

A turboexpander for natural gas pressure letdown.

Plant energy efficiency improvement

For applications ranging from feed-stock chemicals to fertilizers, production often involves higher gas temperatures and pressures that can be recovered and employed in the process to boost plant efficiency.

Efficiency improvement applications include:

- Nitric acid plant hot gas expansion
- Various process tail gases (phenol, PTA, caprolactam)
- Feed gas pressure letdown
- Methanol (syngas)
- Hydrogen peroxide (autooxidation process)

EXPLORE OUR TURBOEXPANDER TECHNOLOGY

The technology behind our turboexpanders is designed for superior performance – to provide more cryogenic cooling or more recovered power for every application. In the case of our hydrocarbon turboexpander compressors, this means greater liquid recovery and extra compression power. Take a look on the inside to see the key design features.

How turboexpanders work

- **A** Gas enters through inlet guides vanes creating initial pressure drop and high-velocity vortex.
- **B** Additional expansion takes place in expander wheel. A conical defuser is often used to recover remaining velocity.
- **C** Extracted power from the expander is transmitted through rotor, supported by oil or magnetic bearings to compressor wheel.
- **D** Process gas enters the compressor where the pressure and temperature are raised by the compressor wheel.
- **E** Process gas exits the wheel through a vaneless diffuser for enhanced operating range and reliability.

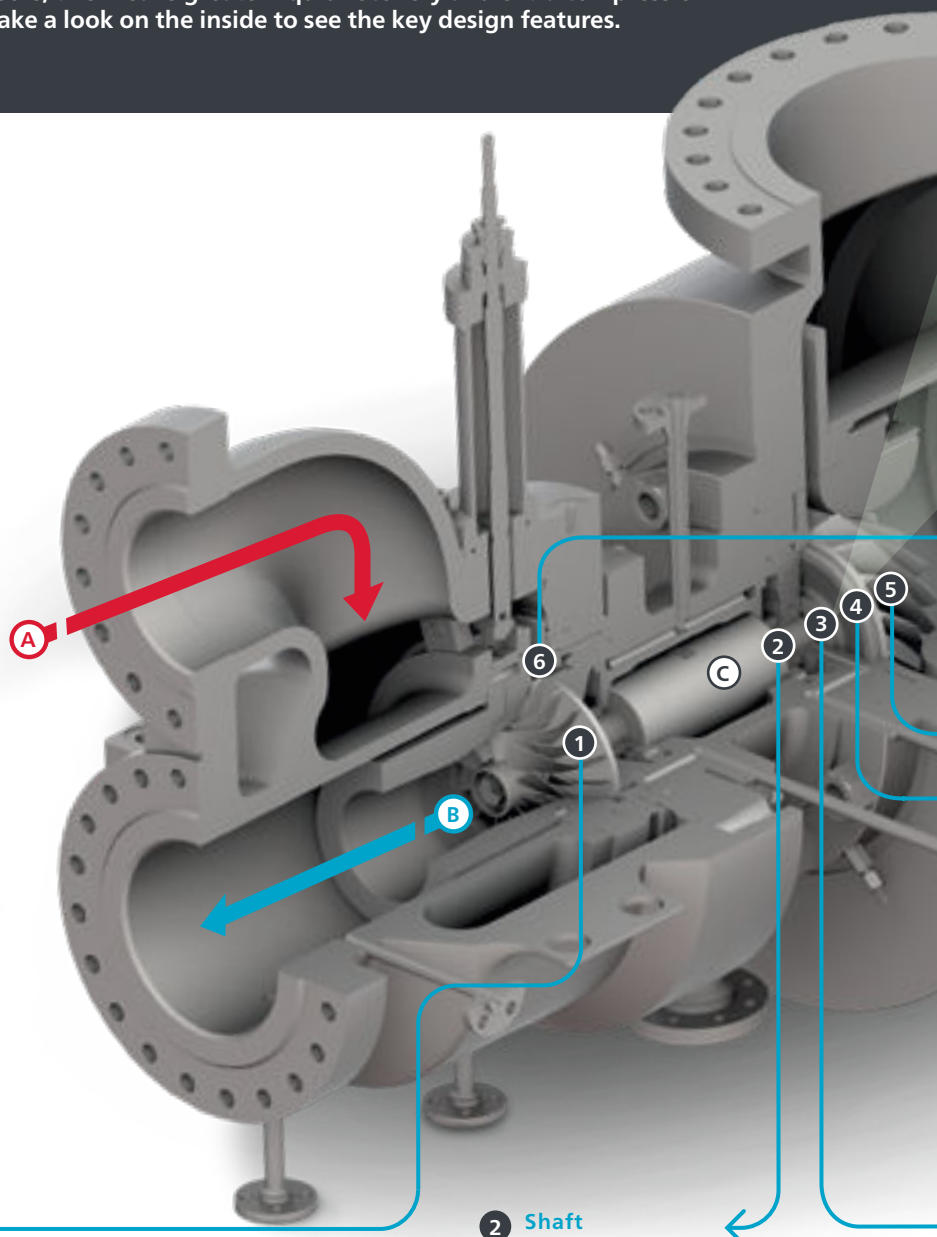

1 Expander wheel (impeller)
Our expander wheels are machined from solid, heat-treated aluminum, titanium or stainless-steel billets, and manufactured using the latest five axis computer-aided manufacturing processes.

2 Shaft
One-piece stiff-shaft uses a proprietary wheel attachment method to ensure positive fit, balance, and torque transfer across entire range of operating speeds, powers, pressures, and temperatures.

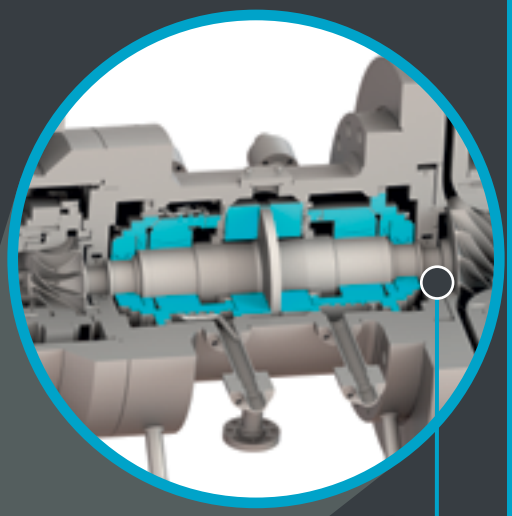

BENEFITS FOR REFRIGERATION AND CRYOGENIC COOLING

- Greater cooling than pressure reduction valves or other comparable technology
- Full flexibility to handle plant and process conditions
- High efficiency
- Exceptional reliability with availability above 99% from most applications
- Wide operational range
- Recover latent energy in necessary processes and reuse as compression power

Available with Active Magnetic Bearings

Optional magnetic bearings are available for Expander-Compressor units to provide an oil-free solution with reduced maintenance and reduced plot plan.

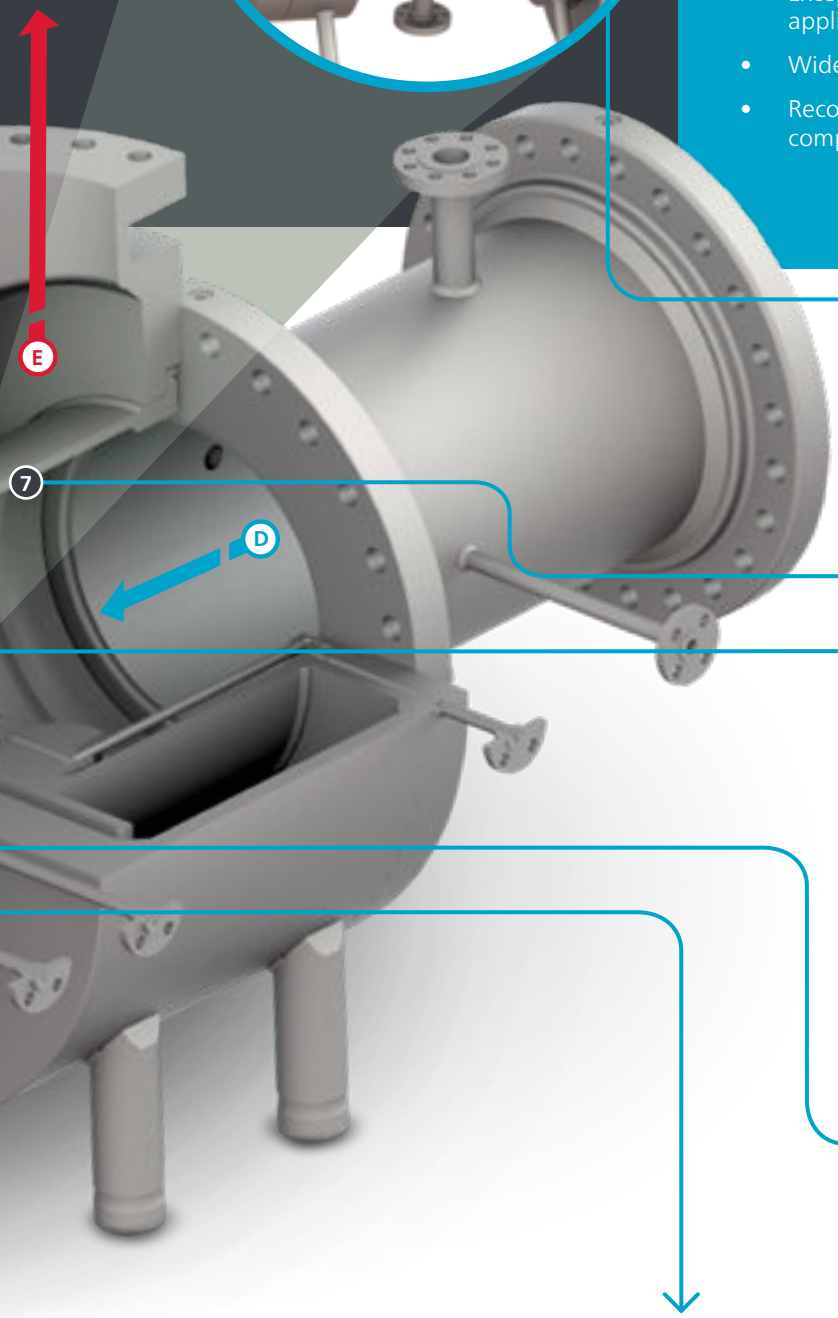

7 Variable diffuser bracket
Designed to allow re-rating of the machine for new process conditions without the need for a new housing or sacrificing performance; variable diffuser brackets give extra flexibility for further upgrades.

6 Variable inlet guide vanes (IGVs)
Our proprietary variable inlet guide vane design develops the optimum inlet swirl for highest expander stage efficiency.

Erosion and galling resistant materials and coatings are used to achieve the highest reliability in the industry.

3 Shaft seals
Simple, robust, staggered labyrinth shaft seals provide the highest reliability of any seal design.

4 Journal and thrust bearings
Our oil-bearings provide stable operating with low vibration across the operating range.

Optional oil-free magnetic bearings are also available.

5 Compressor wheel (impeller)
Offering a wide operating range and superb efficiency, our compressor wheels are manufactured from aluminum, titanium or stainless steel.

They are designed using computational-fluid dynamics and finite-element analysis.

BENEFIT FROM THE MULTISTAGE INTEGRAL GEARING ADVANTAGE

As one of the industry's most efficient and compact designs, integral gear technology enables optimal aerodynamic speeds at each stage. Integrally-geared turboexpanders offer you a small footprint, and provide efficient energy recovery from waste-heat, geothermal and excess pressure (pressure letdown) sources.

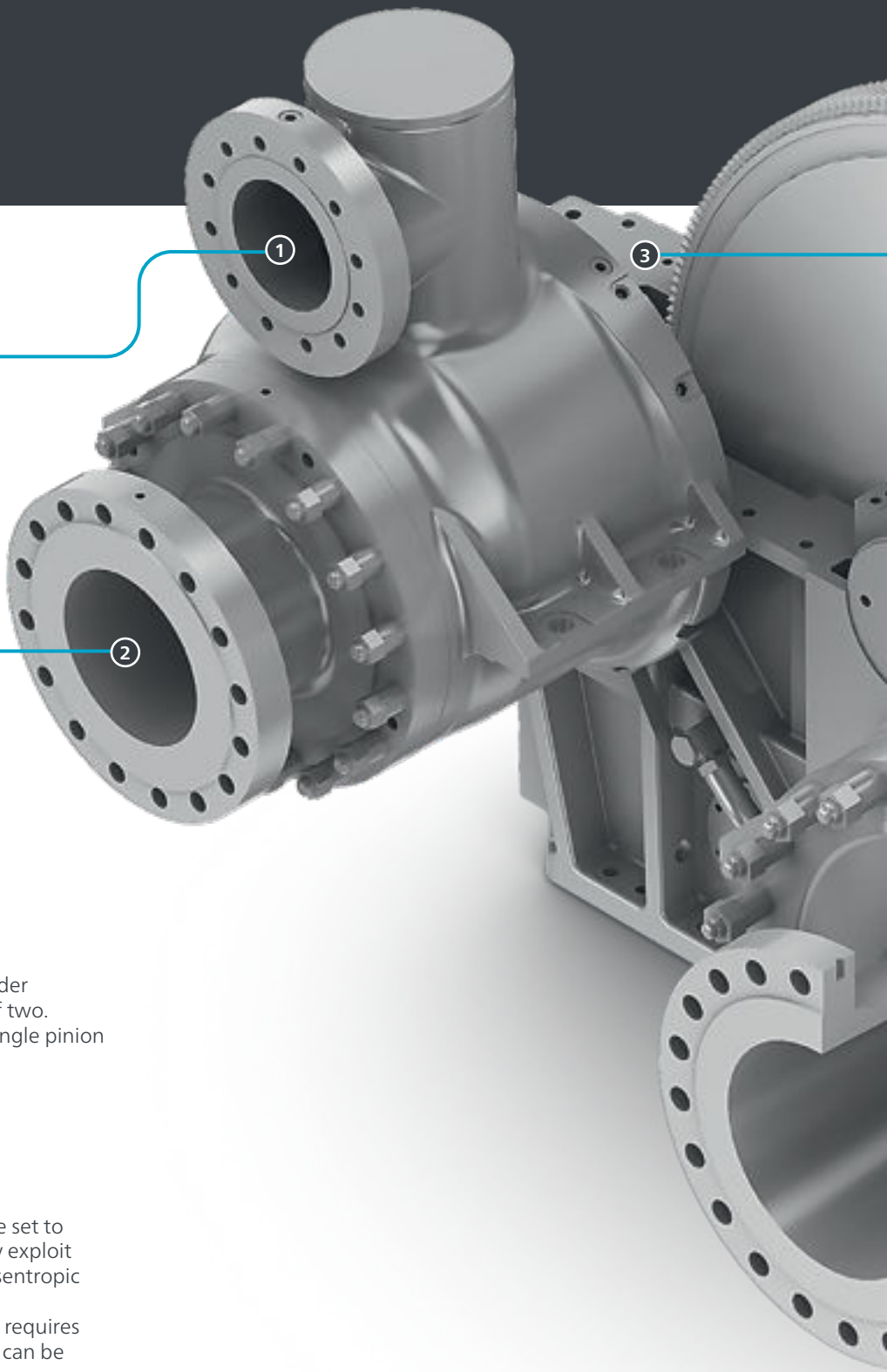

3 First-stage gas inlet
This two-stage expander reduces natural gas pressure from a pipeline for delivery to the grid.

After gas pressure has been partially reduced, it enters a second stage for a further pressure drop and to generate additional electricity.

2 First-stage gas outlet
Natural gas exits the first expansion stage and is led through piping to the second stage.

Integral gearing at work for you

A multi-stage, integrally-geared turboexpander separates stages into groups of either one of two. Each of the stage groups is connected to a single pinion (3 and 5)
The pinions work as driver gears to turn the main bull gear (4) that is connected to a electrical generator (not shown).

Stage efficiency for more energy

Using gearing ratios each stage group can be set to an optimal speed, allowing designers to fully exploit expansion aerodynamics for the maximum isentropic efficiency.
This is particularly important when a process requires a larger pressure drop, or when more power can be utilized for greater energy production.

BENEFITS FOR ENERGY RECOVERY

- Tailor-made expander impellers
- For each stage the best aerodynamic design from various impeller options is chosen
- Higher efficiency and greater electrical energy generation
- Eliminates the power losses of an external speed reduction gear
- No windage losses from high-speed couplings
- Applications include waste heat to power, geothermal power or pressure letdown

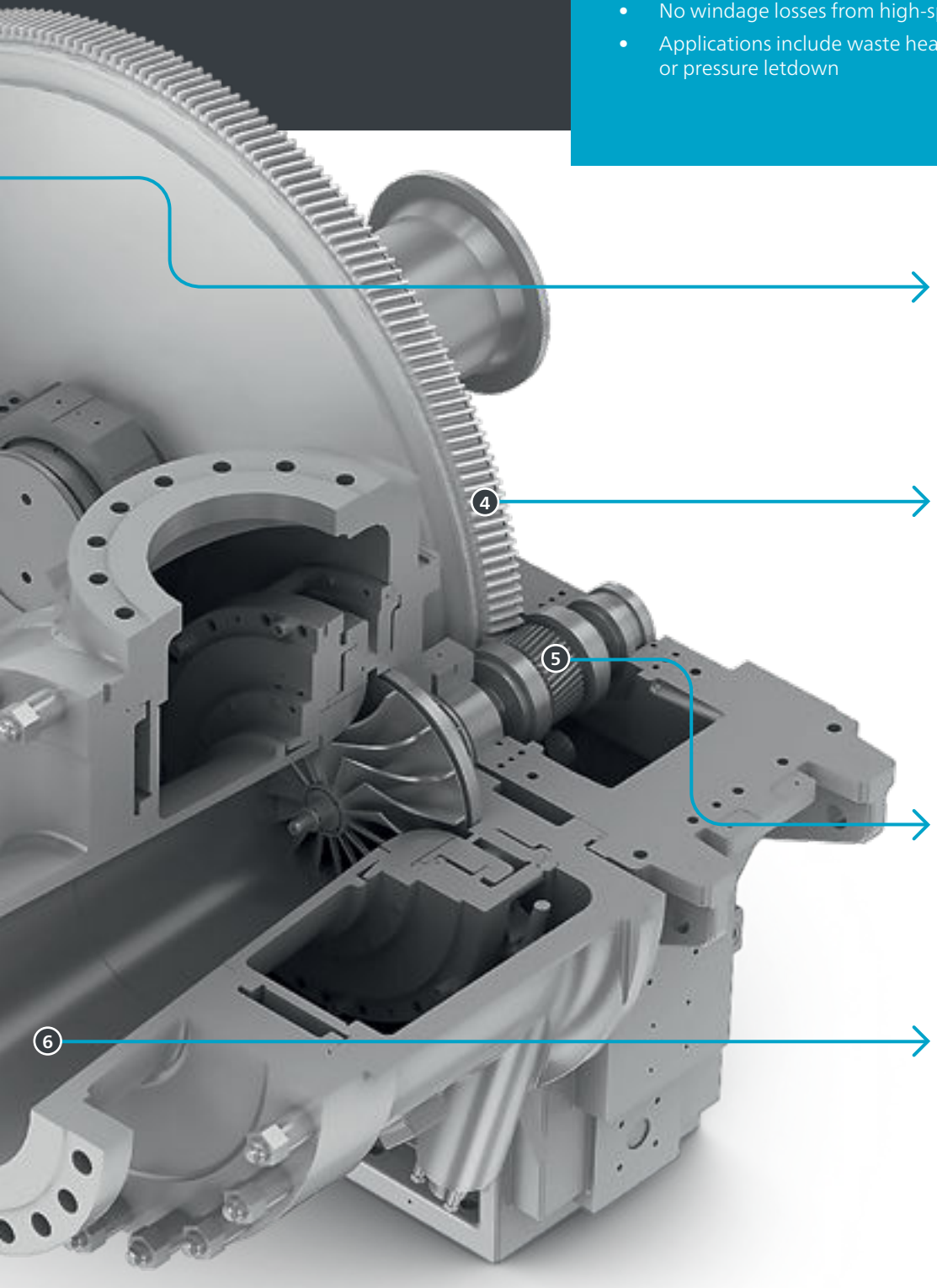

3 First stage pinion / pinion gear
A pinion powered by the first stage of expansion delivers rotational power to drive the bull gear.

4 Bull gear
Driven by both pinion gears through a meshed helical gear pattern, the bull gear's shaft is directly attached to an electrical generator.

Rotating parts are reduced to a minimum and contact surfaces are optimized for the lowest possible mechanical losses.

5 Second stage Pinion / Pinion gear
Expansion in the second stage provides an additional pressure drop for the gas and provides extra rotational power for the bull gear.

6 Second-stage gas outlet
Thanks to the additional stage, the gas' pressure is sufficiently dropped so that it is ready for delivery to residential and commercial users.

Multiple expansion stages (up to four) are possible, depending on process and efficiency requirements.

IT'S ALL IN THE DETAILS: TURBOEXPANDER DESIGN FEATURES

The efficient cooling and power produced by turboexpanders is the result of a seamless interplay of many components. Every part – from bearing systems and shaft seals to casings and controls – has an important role to play. We ensure no detail, no matter how small, is overlooked. The result: maximum efficiency, reliability and performance for your process.

Expander wheels (impellers)

Excellent efficiency begins with precisely designed expander wheels. After all, these are at the heart of the expansion process, accounting for around 50% of the total energy drop (enthalpy) of the gas.

Gas enters an expander wheel from the outside edge and moves inward. The speed of the gas at the outside is roughly the same as the wheel's rotational speed, but it loses speed as it moves to the smaller-radius at the center, reducing pressure.

As a turboexpander specialist, we understand how careful design leads to optimal performance. We can choose from a variety of impeller designs already in our data base, or develop new ones to meet new process specifications through computational fluid dynamics (CFD) and finite element analysis (FEA).



Aerodynamic performance is determined by shape of the blades and tip speed.



Photo: © John Crane Group Corporation

Dynamic dry-gas seals

Sealing options

Our expander compressors are hermetically-sealed and are equipped with labyrinth seals because they do not have shaft ends that extend through the pressure boundary.

For our expander generators, a mechanical seal is often required to prevent process gas from entering into the bearing housing, where it could otherwise contaminate oil- or magnetic bearing systems.

For most applications, API-617-compliant two-port labyrinth seals are more than sufficient to prevent cross contamination. Our turboexpanders can also be equipped with carbon ring or dynamic dry-gas seals, increasing protection for even the most demanding conditions.



Variable inlet guide vanes enable full process control.

Variable inlet guide vanes (IGVs)

IGVs convert gas pressure to a velocity that matches the speed of the outer edge of the expander wheel. This ensures that the pressure drop is split between the IGVs and the expander wheel to maximize both the temperature drop and the recovered power.

Their externally controlled geometry can be used as control valve to adapt to varying flow and inlet conditions. Eliminating the need for an upstream throttle valve, an Atlas Copco turboexpander makes full use of the entire available pressure to produce maximum power and the coldest temperatures.

COMPLETE PRODUCTION EXPERTISE: DESIGN, MANUFACTURING AND TESTING

Atlas Copco Gas and Process has over eight decades of experience in turboexpander design and manufacturing. We help drive the industry, extending the range of turboexpansion applications while handling the entire production chain. Through this broad experience, we deliver some of the most effiencient, reliable and highest performing machines on the market.

Core experience that makes the difference

We know turboexpanders – inside and out. We develop them, build them and maintain them.

Our in-house teams follow each machine from its initial order through every step of the design, testing and commissioning process.

This not only allows us to maintain high quality and reliability but to offer shorter delivery times important for today's dynamic markets.

Through this close interaction, we offer a full range of customization and optimization options, covering packaging, controls, impellers and more.

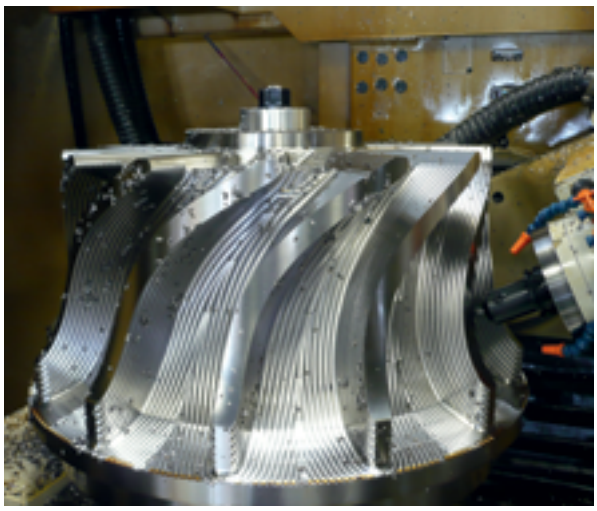

Impellers are milled with five-axis machines.



A turboexpander is assembled for a hydrostatic test.

With our customers around the globe

Our approach also means that we conduct all component, control system and machinery testing in-house. This includes highly precise shaft and impeller balancing, hydrotesting of casings, full control system checks as well as all major tests according to API 617, ASME or other standards.

Through the combined strength of our production facilities and application centers, Atlas Copco Gas and Process is the global leader in non-geared and integrally-geared turboexpanders, with over 5 000 machines installed around the world.



Specialists put the final touches on our turboexpanders before delivery.



Our aftermarket specialists cover the complete Atlas Copco turboexpander product line and use only guaranteed Atlas Copco parts.



We handle maintenance, optimization and upgrades for a full range of all-brand turboexpanders.

PROTECT YOUR INVESTMENT WITH AFTERMARKET SERVICES

From erection and commissioning of your machinery, to knowledgeable preventive service with guaranteed genuine parts, our engineers are here at every step of the way. And whenever your plans or productivity goals change, we can help you make informed decisions about upgrades and conditioning options as your partners from start to finish.

24 / 7
Global customer support



DEDICATED
turboexpander
service technicians



LIFETIME AVAILABILITY
of OEM parts



+200
all-brand
turboexpanders
serviced

All-brand support

Your partner at every step of the way

When you purchase a turboexpander from Atlas Copco Gas and Process, you are investing in a lifetime of sustainable productivity.

At the same time, you are entering into an ongoing relationship with our team of dedicated specialists and technicians who know your process, know your machinery, and know your productivity goals – even as they evolve over time.

Through regular inspections and preventive maintenance, we make sure that your machinery is running optimally.

That's why our global Aftermarket Services network offers a number of custom-tailored choices to ensure your sustainable productivity over the long haul.

Our Aftermarket Services cover the complete product lifespan:

- Regular service plans
- Preventive maintenance
- Ad-hoc repair
- Genuine parts and Turbo Oil Plus
- Erection and commissioning
- Redesign and upgrades
- Advanced services
- All-brand support

SPEED UP YOUR PLANT SETUP THROUGH STANDARDIZED SOLUTIONS

ECOTS™, our pre-engineered expander-compressor package provides the right match for your natural gas processing applications. Thanks to its semi-standardized concept, ECOTS™, provides fast delivery, while recouping process energy and providing the excellent refrigeration levels vital to your process.

More benefits through standardization

Our Expander-Compressor Off-The-Shelf, otherwise known as the ECOTS™, is designed with top efficiency and fast delivery in mind. Through standardization of key components, the expander is produced and delivered faster than a completely customized turboexpander – reducing delivery and set-up times by 25% to 35%.

This means your processing plant can begin making commissioning plans sooner and see returns on investments as early as possible.

The basic engineering schematics are delivered a few weeks after order placement, enabling plant designers to work on integration ahead of time.

With a variety of package options

Our built-to-order approach also offers the same excellent quality of fully customized machines while providing aerodynamic customization to match process requirements.

Packages for high-flowrate gas plants include:

- Winterization package
- Inlet trip valves and inlet screen
- Surge control
- Dual seal-gas filters
- Valved and manifolded casing drains
- Many other options



An ECOTS™ package in the production line.

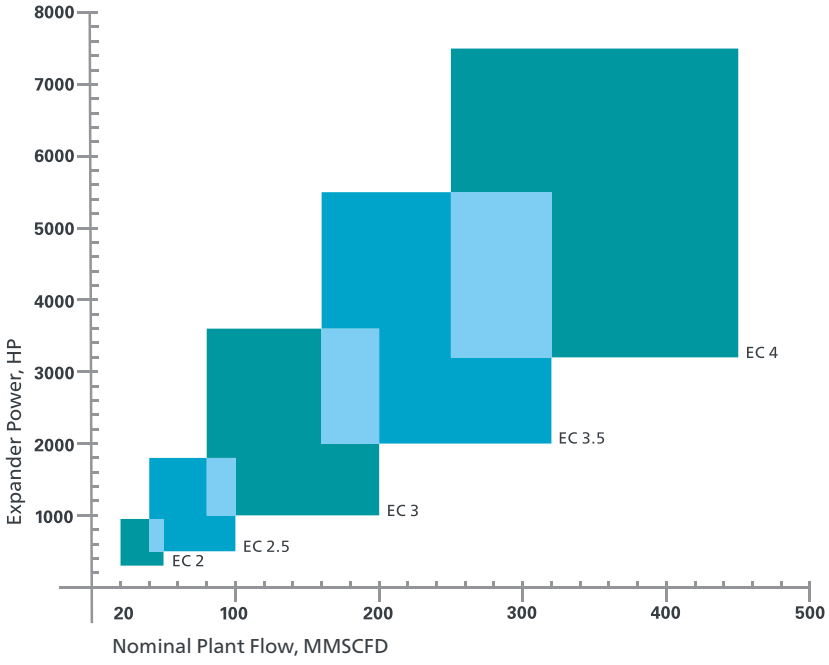

ECOTS™ gas flow levels and expander power by model.



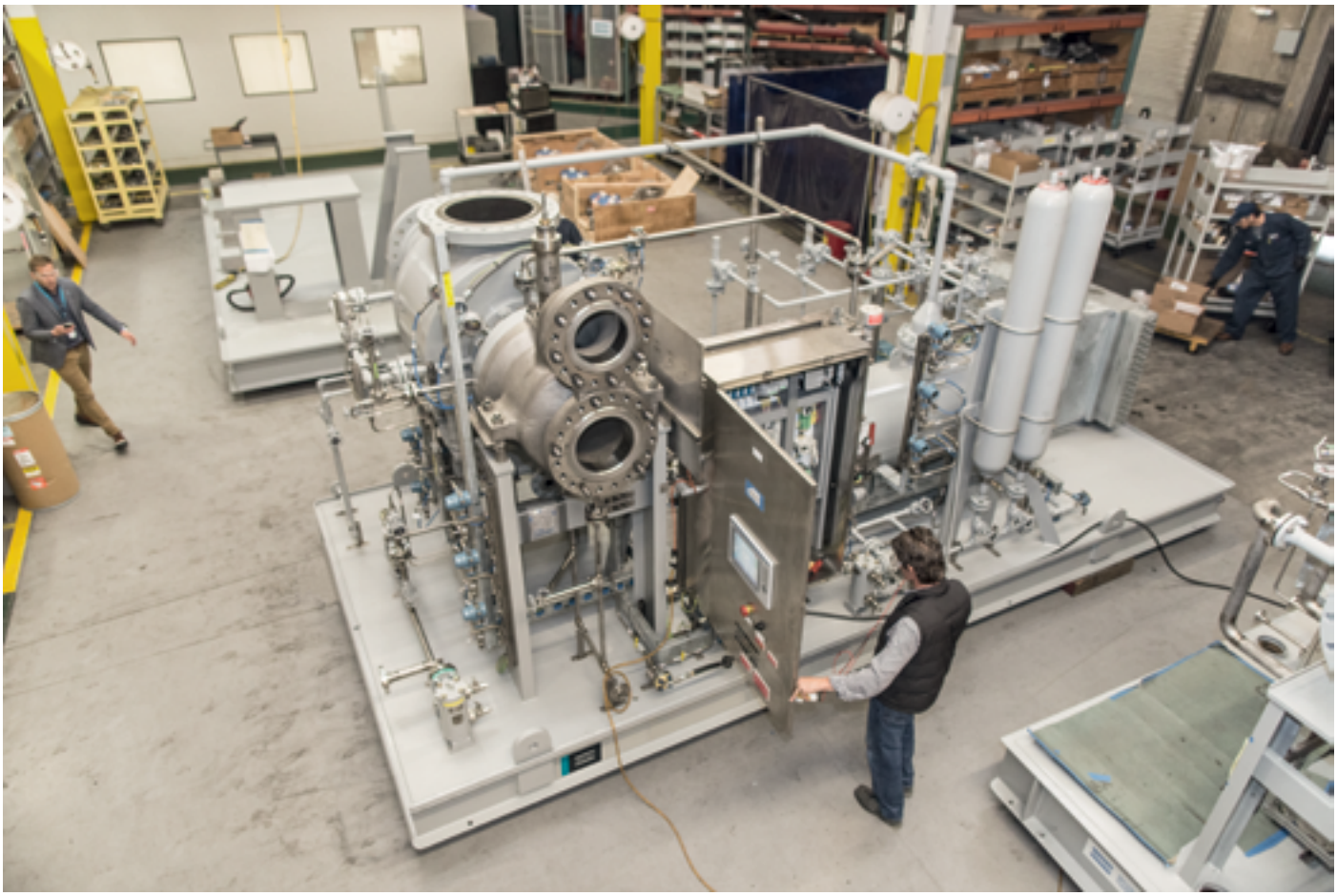

TURBOEXPANDER TECHNICAL SPECIFICATIONS

	Non-geared expander compressor [1, 2]	Integrally-geared expander compressor / Compander ™ [3]	ECOTS ™ expander compressor [4]
			
Maximum inlet pressure	200 bar(a) / 2 900 psia	Up to 200 bar(a) / 2 900 psia	Up to 82 bar(a) / 1 200 psia
Expansion ratio (per stage)	18 (depending on process fluid)	18 (depending on process fluid)	5
Inlet temperature	-220 °C to +200 °C / -365 °F to +400°F	-220 °C to +500 °C / -365 °F to +930 °F	Expander: -129 °C to +93 °C -200 °F to +200 °F Compressor: -29 °C to +93 °C -20 °F to +200 °F
Inlet flow range	10 000 to 1 000 000 Nm³/h 6 000 to 600 000 SCFM	10 000 to 1 000 000 Nm³/h 6 000 to 600 000 SCFM	Plant flow up to 470 800 Nm³/h up to 400 MMSCFD
Maximum number of stages	1	1 to 6	1
Gases handled	All industrial gases and hydrocarbon gas mixtures	All industrial gases and hydrocarbon gas mixtures	Natural gas
Shaft			
Maximum impeller speed (RPM)	100 000	50 000	50 000
Maximum shaft power	Up to 22 500 kW 30 000 HP	Up to 50 000 kW 67 000 HP	5 200 kW 7 000 HP
Seals			
Labyrinth	•	•	•
Carbon ring		•	
Oil-lubricated		•	
Dynamic dry-gas		•	
Capacity control			
Variable inlet guide vanes (IGVs)	Expander only	•	Expander only
API	Atlas Copco Standard; API 617; Customer specification	Manufacturers Standard; API 617	Atlas Copco Standard
Axial thrust compensation	Bidirectional thrust bearings with Automatic Thrust Balancing control and monitoring system.	Bidirectional thrust bearings or thrust collars on pinions; bidirectional thrust bearings on gear shaft.	Bidirectional thrust bearings with Automatic Thrust Balancing control and monitoring system.
Oil system	Atlas Copco Standard; API 614; Customer specifications	Atlas Copco Standard; API 614; Customer specifications	Atlas Copco Standard
Test code	API 617, ASME PTC-10 Class II	API 617, ASME PTC-10 Class II	Atlas Copco Standard

[1] Loaded compressor available with oil bearings or active magnetic bearings
[2] Available with fluid brake for small power ranges
[3] Combination of expander and compressor stages on one gearbox
[4] Pre-engineered single-shaft expander-compressor for NGL recovery processes

PRODUCT APPLICATION MATRIX

Market / Application	Non-geared expander compressor [1, 2]	Integrally-geared expander generator / Compander ™ [3]	ECOTS ™ expander compressor [4]
LNG			
FPSO / FLNG	•	•	
LNG reliquefaction	•	•	
LNG liquefaction	•		
LNG peak shaving	•	•	
Gas processing			
Pipeline dew point control	•		•
Cryogenic NGL recovery	•	•	•
Ethane recovery	•		•
Gas preconditioning	•		•
Refineries			
LPG production	•	•	
Aromatics	•	•	
Olefins	•	•	
Gas to liquid (GTL)	•	•	
Chemicals / petrochemicals			
Hydrogen purification / recovery	•		
Ethylene and propylene	•		
Propane/Butane dehydrogenation	•	•	
Phenol	•	•	
Olefins	•		
Purified terephthalic acid (PTA)	•		
Fertilizers			
Nitric acid		•	
Ammonia	•	•	
Renewable Energy			
Pipeline (pressure letdown)		•	
Geothermal power		•	
Waste heat to power		•	
Energy storage (CAES, LAES)		•	

[1] Loaded compressor available with oil bearings or active magnetic bearings
[2] Available with fluid brake for small power ranges
[3] Combination of expander and compressor stages on one gearbox
[4] Pre-engineered single-shaft expander-compressor for NGL recovery processes

ENERGY RECOVERY TURNS PRESSURE OR HEAT INTO VALUABLE POWER

An overview of some of the most common applications

Pressure letdown

Turboexpanders replace pressure letdown valves at natural gas pressure reduction stations. They generate sustainable electricity from a pressure drop already necessary for gas distribution to end-users. The result is an extra revenue stream to power plants, gas processing plants and gas grid operators.



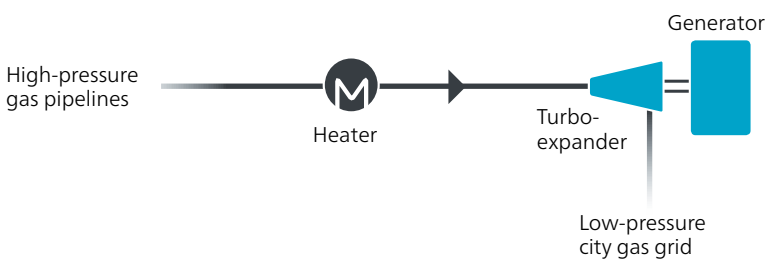

Inlet pressure:
up to 200 bar(a) / 2 900 psia

Inlet temperature:
-220 °C to 500 °C / 140 °F to 932 °F

Typical flow levels:
up to 500 000 Nm^3/h
up to 294 288 SCFM

Power:
up to 50 000 kW / 67 000 HP

Geothermal power

The temperatures in geothermal reservoirs are turned into sustainable electricity by employing the Organic Rankine Cycle with a turboexpander generator running at the heart of the process. Our turboexpanders can generate up to 50 MW gross per power train.

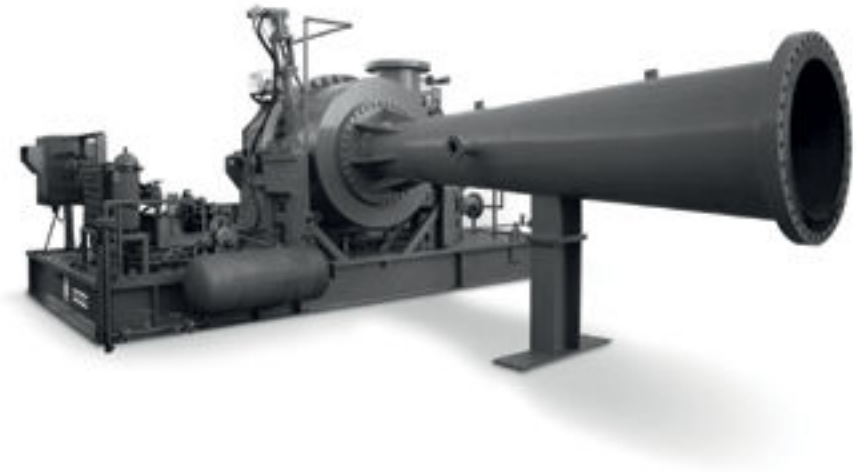

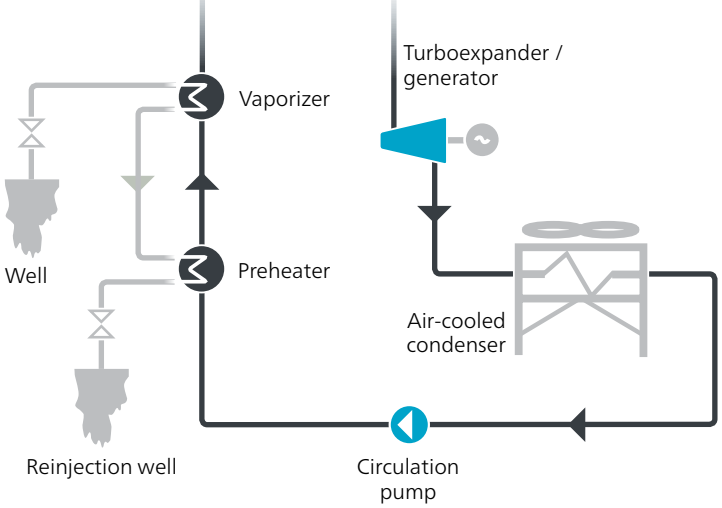

Inlet pressure:
up to 200 bar(a) / 2 900 psia

Heat source temperature:
up to 220 °C / 450 °F

Enthalpy:
500 – 1 000 kJ / kg (215 – 430 Btu / lb)

Max gross power:
50 MW per train / 67 000 HP per train

Inlet guide flow range:
40 – 150%

ENERGY RECOVERY TURNS PRESSURE OR HEAT INTO VALUABLE POWER

An overview of some of the most common applications

Waste heat to power

Turboexpanders transform excess heat created from industrial processes into valuable electric energy for sale to the grid or use in a plant. Waste heat power generation is an excellent investment at industrial sites with a capacity factor about 60%. It has little or no impact on main industrial processes.



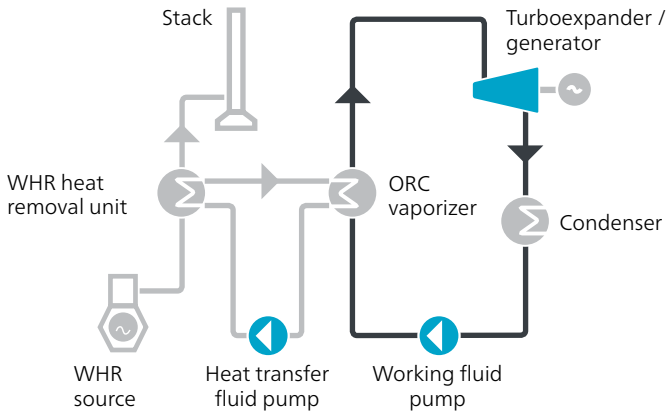

Inlet pressure:
up to 200 bar(a) / 2 900 psia

Heat source temperature:
up to 650 °C / 1 200 °F

Enthalpy:
300 – 700 kJ/kg (130 – 300 Btu/lb)

Max gross power:
40 MW per train / 53 600 HP per train

Inlet guide flow range:
40 – 150%

Process tail gas (nitric acid, caprolactam)

Turboexpanders are employed at the end of the nitric acid production process in order to recover the high temperatures from catalytic reactor's hot tail gases. They allow this energy to be reused, most commonly as power for air compression at the beginning of the process.



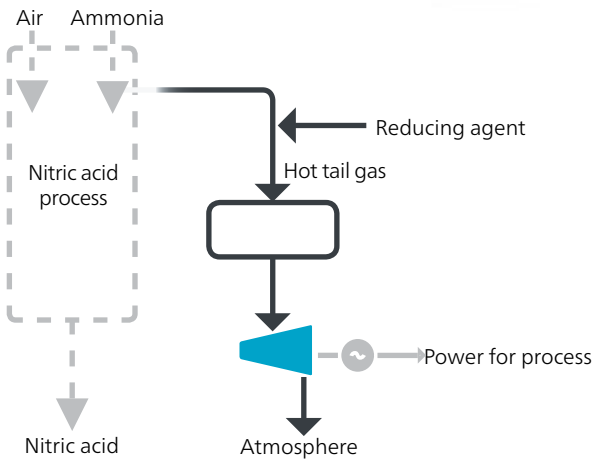

Inlet pressure:
up to 50 bar(a) / 725 psia

Outlet pressure:
atmospheric

Inlet temperature:
up to 500 °C / 932 °F

Flow:
50 000 – 1 million Nm^3/h
29 000 – 600 000 SCFM

Power:
up to 50 MW / 67 000 kW

EFFICIENT REFRIGERATION FOR HYDROCARBONS AND PETROCHEMICALS

An overview of some of the most common applications

Natural Gas Liquids (NGL) recovery

An expander compressor in a processing plant implements "seal-less" design for zero emissions and elimination of vented seal gases. Plants can operate in either full ethane recovery or rejection mode giving added flexibility for current market conditions.

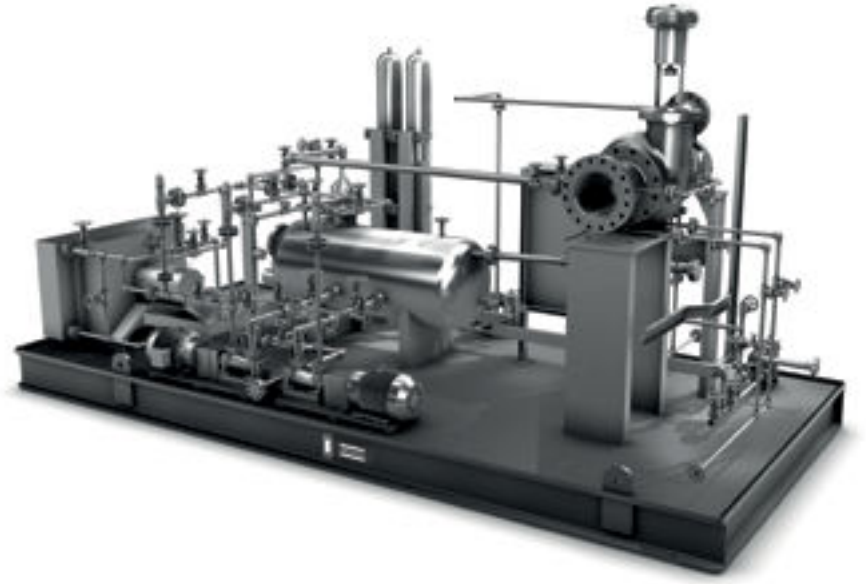

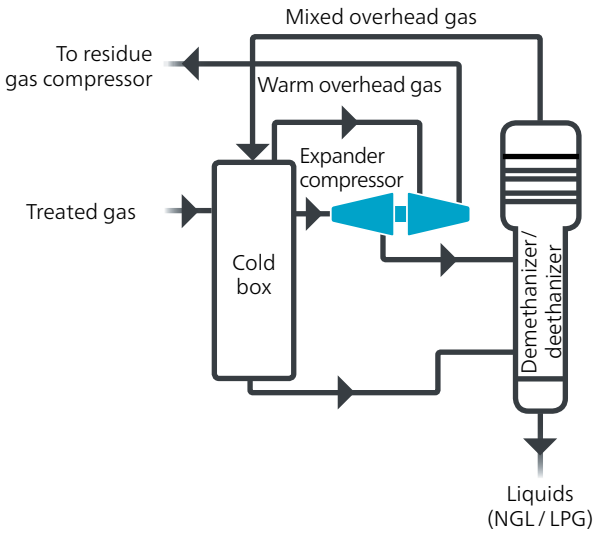

Inlet pressure (typical values):
up to 125 bar(a) / 1 800 psia

Outlet temperature:
down to -165 °C / -265 °F

Shaft power:
up to 18 000 kW / 24 000 HP

Single train capacity:
up to 27 million Nm^3/day
up to 1 000 MMSCFD

Flow:
108 kg/s / 237 lb/s

LNG peak shaving / small-scale LNG

Used since the mid-1970s at LNG peak shaving facilities, the reverse-Brayton cycle – with methane, nitrogen or a combination of the two – is now adding increased flexibility for small-scale LNG production. The cycle is also employed on LNG transport vessels and FLNG installations for BOG reliquefaction.

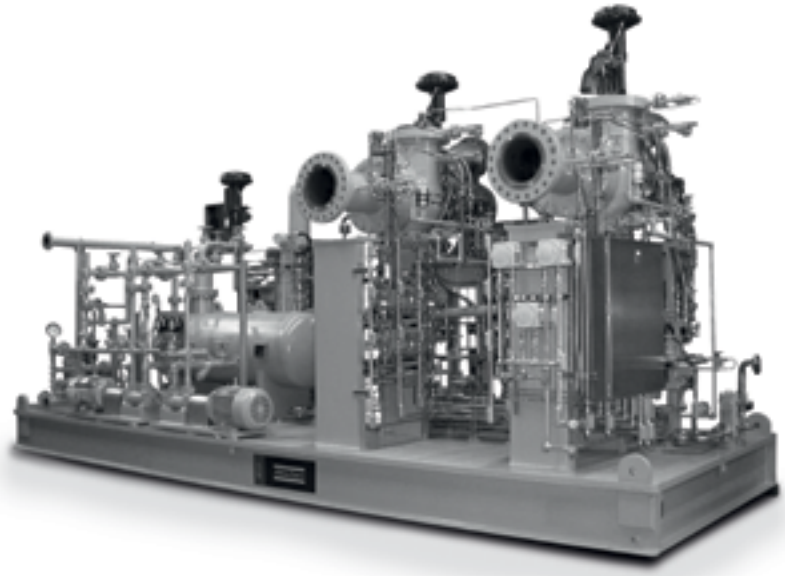

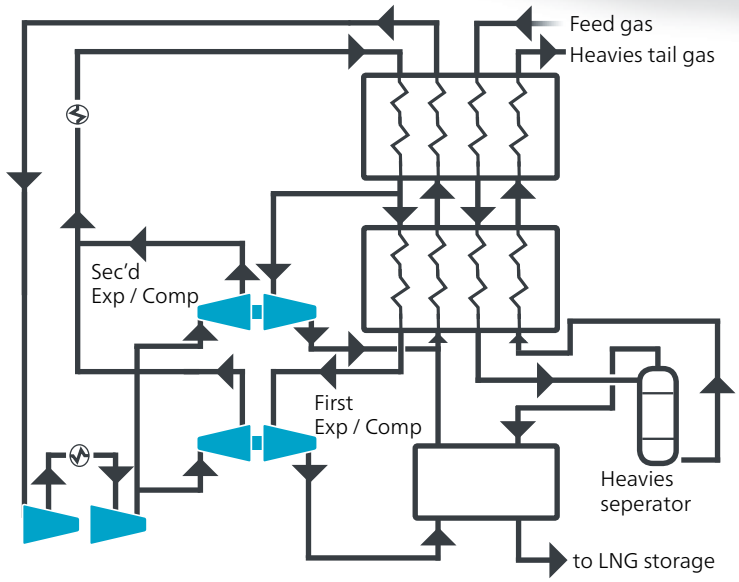

Inlet pressure (typical values):
48 bar(a) / 700 psia

Outlet pressure:
3 bar(a) / 44 psia

Inlet temperature:
-23 °C / -10 °F

Outlet temperature:
-109 °C / -164 °F

Flow:
50 000 kg / hr / 110 000 lb / hr

EFFICIENT REFRIGERATION FOR HYDROCARBONS AND PETROCHEMICALS

An overview of some of the most common applications

Ethylene production

Tuboexpanders produce cryogenic temperatures in ethylene plants, to facilitate high levels of ethylene recovery from refinery gas.
Turboexpanders handle condensing streams and provide a high expansion ratio in a single stage.
Pre-boost, post-boost and generator-loaded applications are possible.

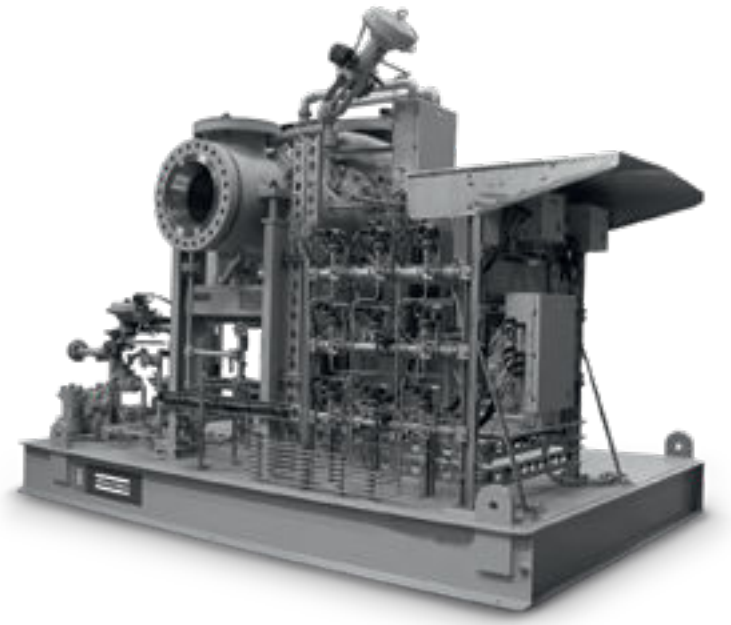

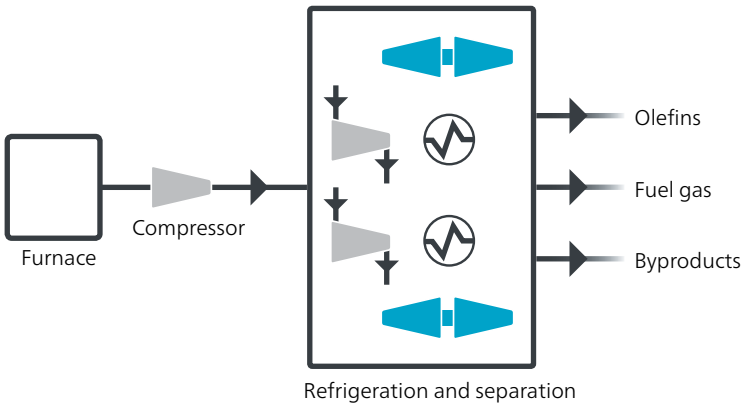

Inlet pressure (typical values):
30 bar(a) / 435 psia

Outlet pressure:
6 bar(a) / 90 psia

Inlet temperature:
-100 °C / -150 °F

Outlet temperature:
-160 °C / -260 °F

Pipeline dew point control

Hydrocarbon dew point control is achieved by cooling gas through expansion and separating the water content. The process is not only the simplest for gas treatment, it is one of the least expensive. As an added benefit, it enables expansion power to be recovered in gas sendout.



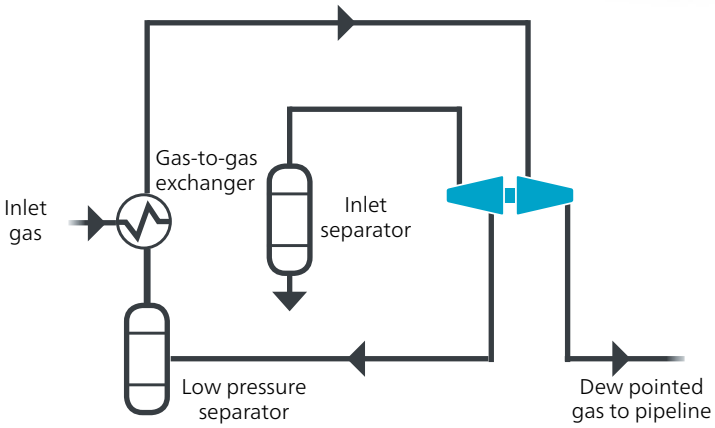

Inlet pressure (typical values):
100 bar(a) / 1 450 psia

Inlet temperature:
-12 °C / 10 °F

Outlet pressure:
48 bar(a) / 700 psia

Outlet temperature:
-40 °C / -40 °F

EFFICIENT REFRIGERATION FOR HYDROCARBONS AND PETROCHEMICALS

An overview of some of the most common applications

Propane dehydrogenation (PDH)

Turboexpanders provide an efficient means to deliver the cryogenic temperatures necessary for converting propane into propylene and hydrogen. PDH represents one of the newer application fields for turboexpanders.
It is a relatively new way to produce propylene, which doesn't require a steam cracker or fluid catalytic cracking unit, and gives an independence from oil-derived ethylene.

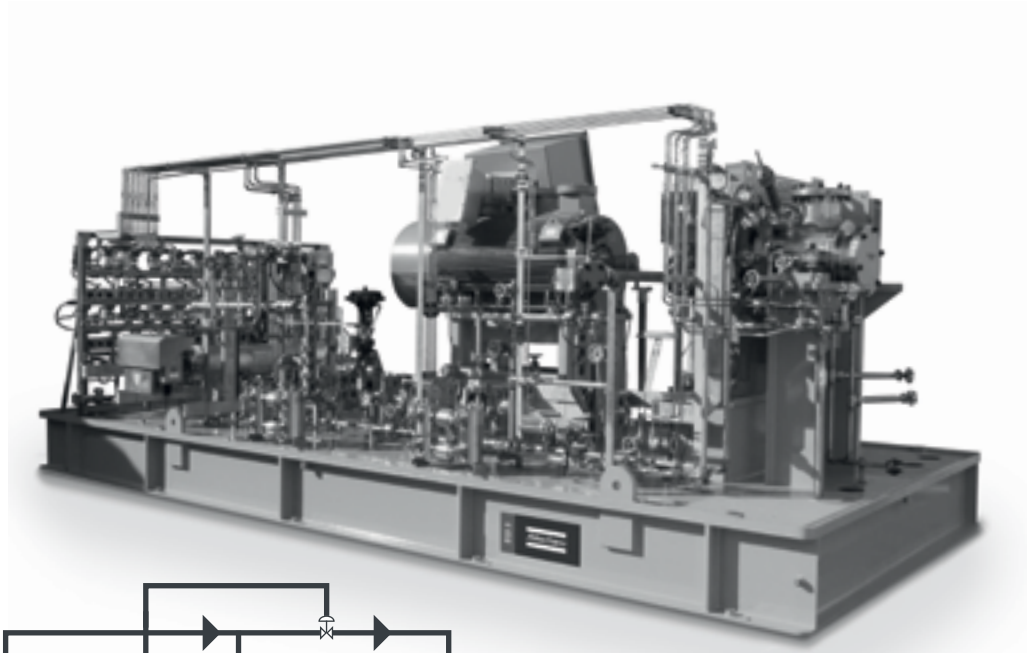

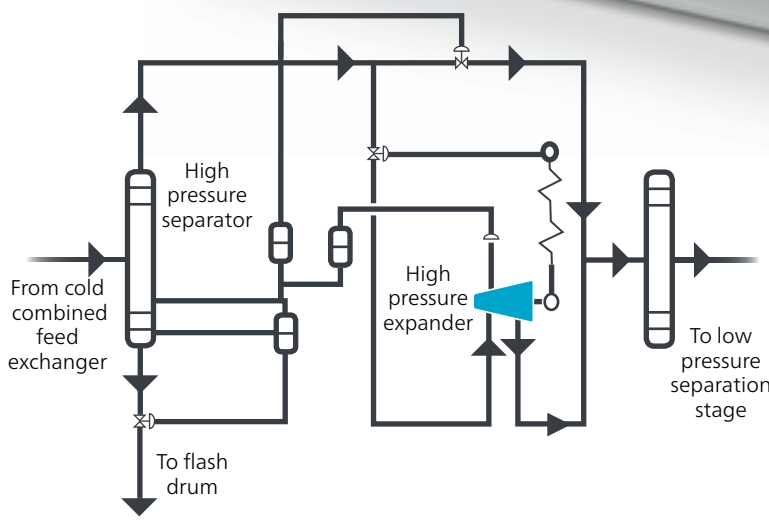

Inlet pressure (typical values):
13 bar(a) / 189 psia

Outlet pressure:
8 bar(a) / 116 psia

Inlet temperature:
-99 °C / -146 °F

Flow:
200 000 Nm^3/h / 120 000 SCFM

Power:
up to 1.3 MW / 1 800 HP

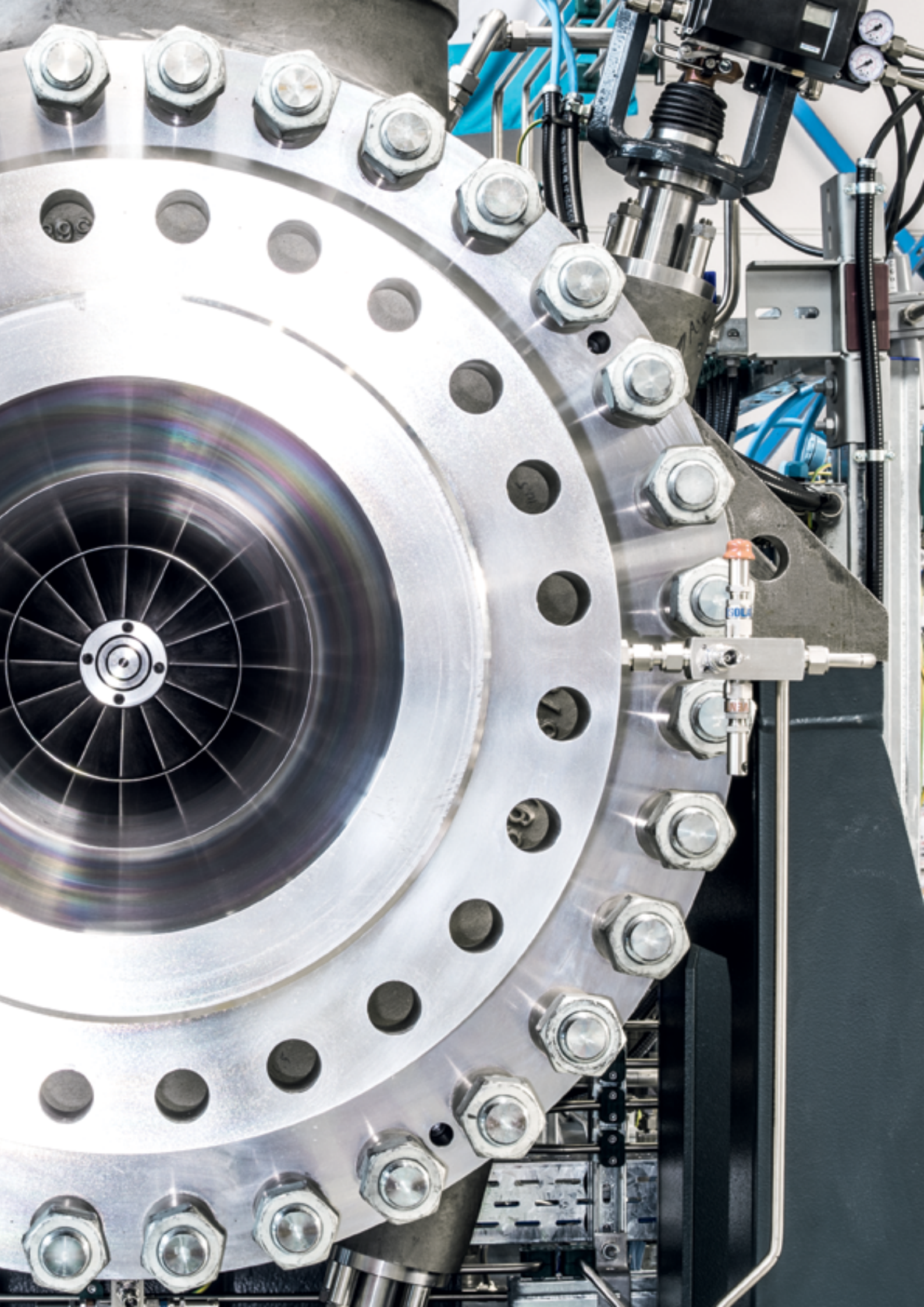

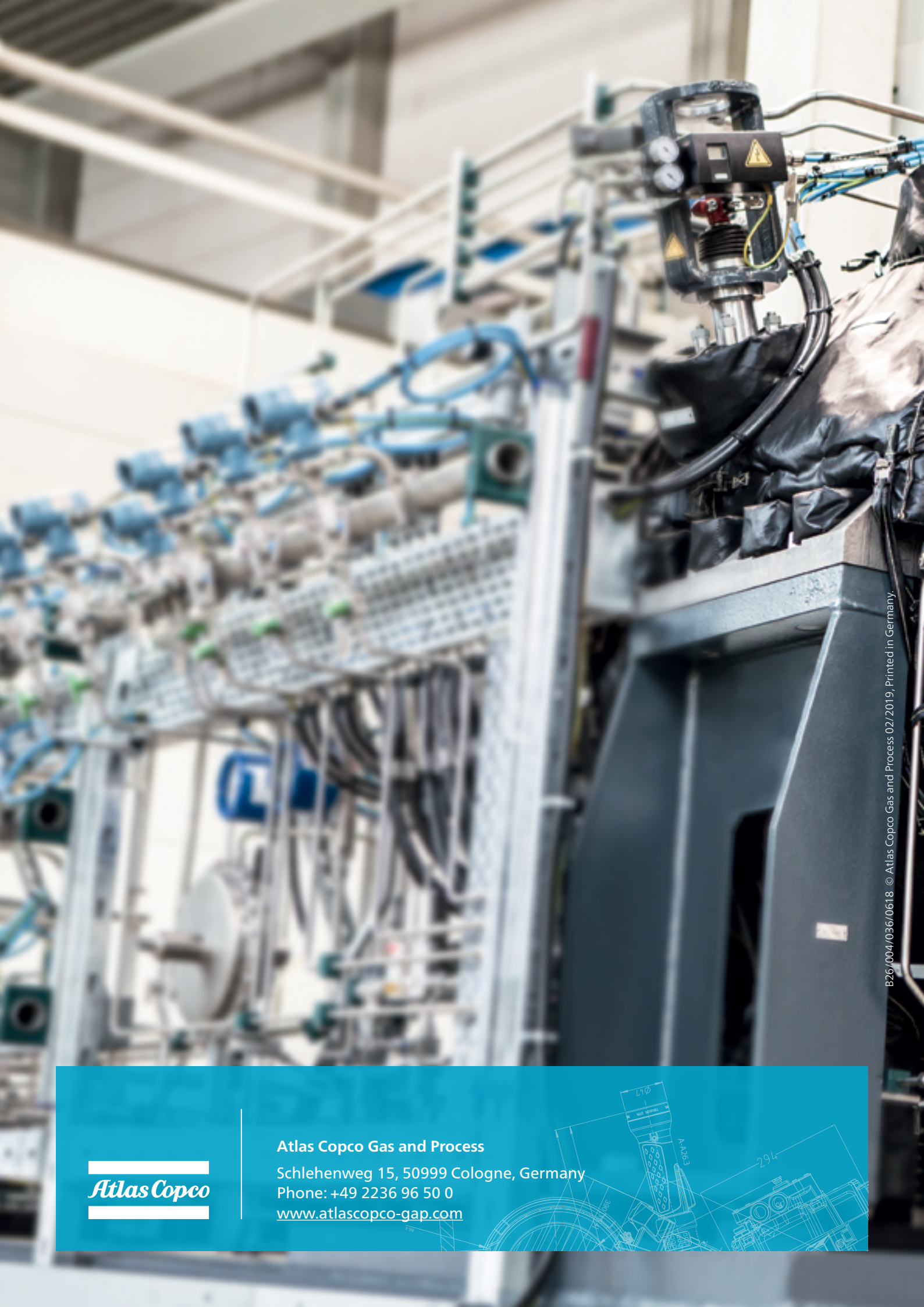

Atlas Copco Gas and Process

Schlehenweg 15, 50999 Cologne, Germany
Phone: +49 2236 96 50 0
www.atlascopco-gap.com

B26/004/036/0618 © Atlas Copco Gas and Process 02/2019, Printed in Germany.