Technical Information
Omnigrad M TR10

Modular RTD assembly
thermowell and neck tube, thread



Application

- Universal range of application
- Measuring range: -200...600 °C (-328...1112 °F)
- Pressure range up to 75 bar (1088 psi)
- Degree of protection: up to IP 68
- Vibration-resistant sensor elements up to 60g

Head transmitters

All Endress+Hauser transmitters are available with enhanced accuracy and reliability compared to directly wired sensors. Easy customizing by choosing one of the following outputs and communication protocols:

- Analog output 4...20 mA
- HART®
- PROFIBUS® PA
- FOUNDATION Fieldbus™

Your benefits

- High flexibility due to modular assembly with standard terminal heads and customized immersion length
- Highest possible compatibility with a design according to DIN 43772
- Neck tube for heat protection of head transmitter
- Fast response time with reduced/tapered tip form
- Types of protection for use in hazardous locations:
  Intrinsic Safety (Ex ia)
  Non-Sparking (Ex nA)

Endress+Hauser
People for Process Automation

Function and system design

Measuring principle

These resistance thermometers use a Pt100 temperature sensor according to IEC 60751. This temperature sensor is a temperature-sensitive platinum resistor with a resistance of 100 Ω at 0 °C (32 °F) and a temperature coefficient $\alpha = 0.003851\ °C^{-1}$.

There are generally two different kinds of platinum resistance thermometers:

- **Wire wound (WW):** Here, a double coil of fine, high-purity platinum wire is located in a ceramic support. This is then sealed top and bottom with a ceramic protective layer. Such resistance thermometers not only facilitate very reproducible measurements but also offer good long-term stability of the resistance/temperature characteristic within temperature ranges up to 600 °C (1112 °F). This type of sensor is relatively large in size and it is comparatively sensitive to vibrations.
- **Thin film platinum resistance thermometers (TF):** A very thin, ultrapure platinum layer, approx. 1 µm thick, is vaporized in a vacuum on a ceramic substrate and then structured photolithographically. The platinum conductor paths formed in this way create the measuring resistance. Additional covering and passivation layers are applied and reliably protect the thin platinum layer from contamination and oxidation even at high temperatures.

The primary advantages of thin-film temperature sensors over wire wound versions are their smaller sizes and better vibration resistance. A relatively low principle-based deviation of the resistance/temperature characteristic from the standard characteristic of IEC 60751 can frequently be observed among TF sensors at high temperatures. As a result, the tight limit values of tolerance category A as per IEC 60751 can only be observed with TF sensors at temperatures up to approx. 300 °C (572 °F). For this reason, thin-film sensors are generally only used for temperature measurements in ranges below 400 °C (932 °F).

Measuring system

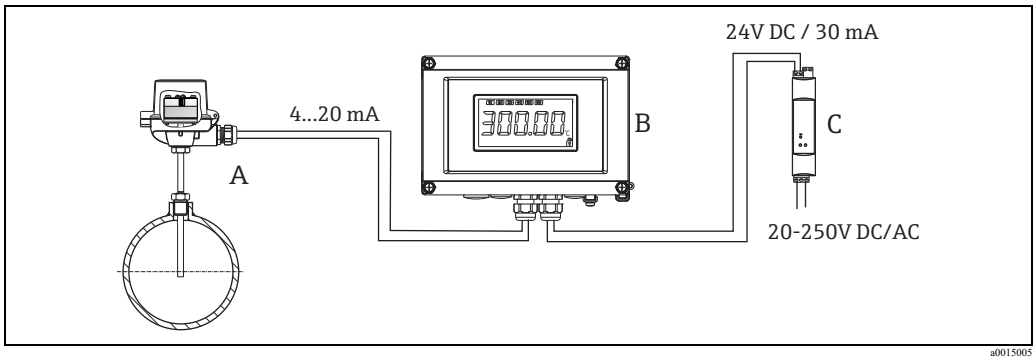

Example of an application

A Thermometer with fitted head transmitter

B RIA16 field display unit
  – The display unit records the analog measuring signal from the head transmitter and shows this on the display. The LC display shows the current measured value in digital form and as a bar graph indicating a limit value violation. The display unit is looped into the 4 to 20 mA circuit and gets the required energy from there. More information on this can be found in the Technical Information (see "Documentation").

C Active barrier RN221N
  – The RN221N active barrier (24 V DC, 30 mA) has an galvanically isolated output for supplying voltage to loop powered transmitters. The universal power supply works with an input supply voltage of 20 to 250 V DC/AC, 50/60 Hz, which means that it can be used in all international power grids. More information on this can be found in the Technical Information (see "Documentation").

Equipment architecture

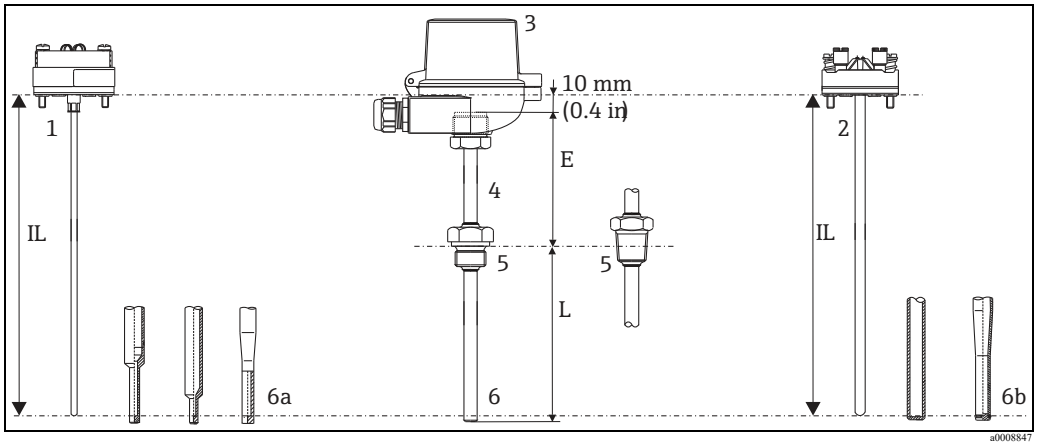

Equipment architecture of the Omnigrad M TR10

1	Insert (∅ 3 mm, 0.12 in) with mounted head transmitter, for example	6	Various tip shapes - detailed information see chapter 'tip shape':
2	Insert (∅ 6 mm, 0.24 in) with mounted ceramic terminal block, for example	6a	Reduced or tapered for inserts with ∅ 3 mm (0.12 in)
3	Terminal head	6b	Straight or tapered for inserts with ∅ 6 mm (0.24 in)
4	Protection armature	E	Neck tube
5	Threads as process connection	L	Immersion length
		IL	Insertion length = E + L + 10 mm (0.4 in)

The Omnigrad M TR10 RTD assemblies are modular. The terminal head serves as a connection module for the protection armature in the process as well as for the mechanical and electrical connection of the measuring insert. The actual RTD sensor element is fitted in and mechanically protected within the insert. The insert can be exchanged and calibrated even during the process. Either ceramic terminal blocks or transmitters can be fitted to the internal base washer. Where required, threads or compression fittings can be fixed onto the protection armature.

Measurement range

-200...+600 °C (-328...+1112 °F)

Performance characteristics

Operating conditions

Ambient temperature

Terminal head	Temperature in °C (°F)
Without mounted head transmitter	Depends on the terminal head used and the cable gland or fieldbus connector, see 'Terminal heads' section, → ä 11
With mounted head transmitter	-40 to 85 °C (-40 to 185 °F)
With mounted head transmitter and display	-20 to 70 °C (-4 to 158 °F)

Process pressure

The pressure values to which the actual thermowell can be subjected at the various temperatures and maximum permitted flow velocity are illustrated by the figure below. Occasionally, the pressure loading capacity of the process connection can be considerably lower. The maximum allowable process pressure for a specific thermometer is derived from the lower pressure value of the thermowell and process connection.

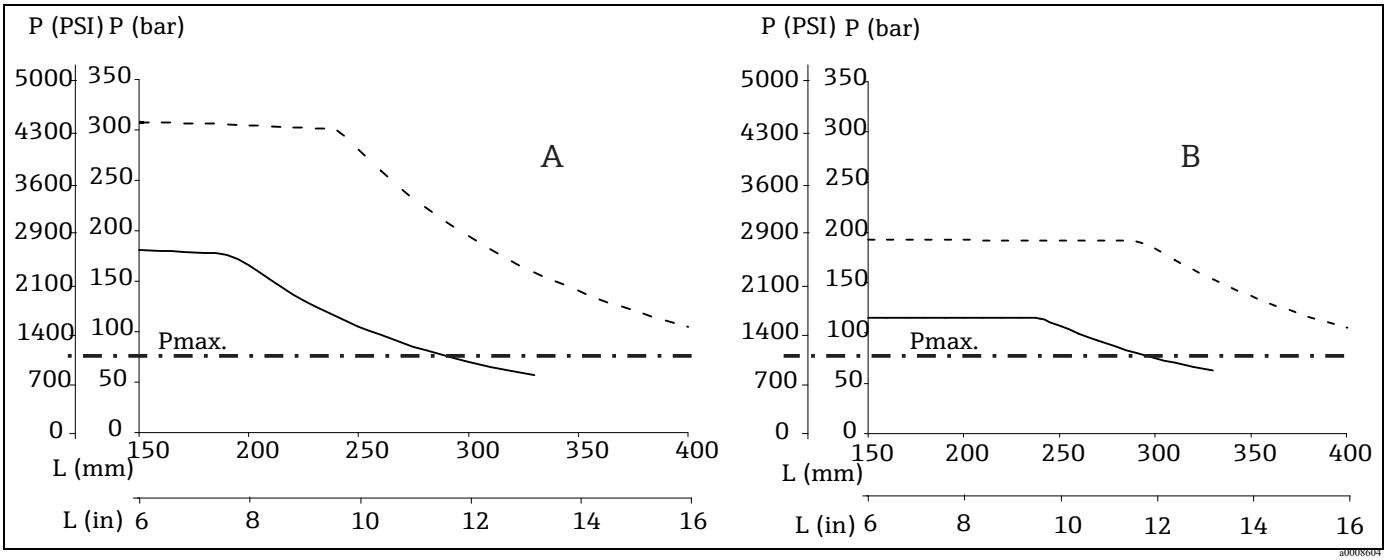

Maximum permitted process pressure for tube diameter, limited to 75 bar (1088 psi) by the threaded process connection
- *Thermowell diameter 9 x 1 mm (0.35 in) ----------*
- *PThermowell diameter 12 x 2.5 mm (0.47 in) - - - - - -*

A Medium water at T = 50 °C (122 °F)
B Medium superheated steam at T = 400 °C (752 °F)
L Immersion length
P Process pressure
$P_{max.}$ Maximum permitted process pressure, limited by the process connection

Permitted flow velocity depending on the immersion length

The highest flow velocity tolerated by the thermometer diminishes with increasing immersion length exposed to the stream of the fluid. In addition it is dependent on the diameter of the thermometer tip, on the kind of measuring medium, on the process temperature and on the process pressure. The following figures exemplify the maximum permitted flow velocities in water and superheated steam at a process pressure of 5 MPa (50 bar).

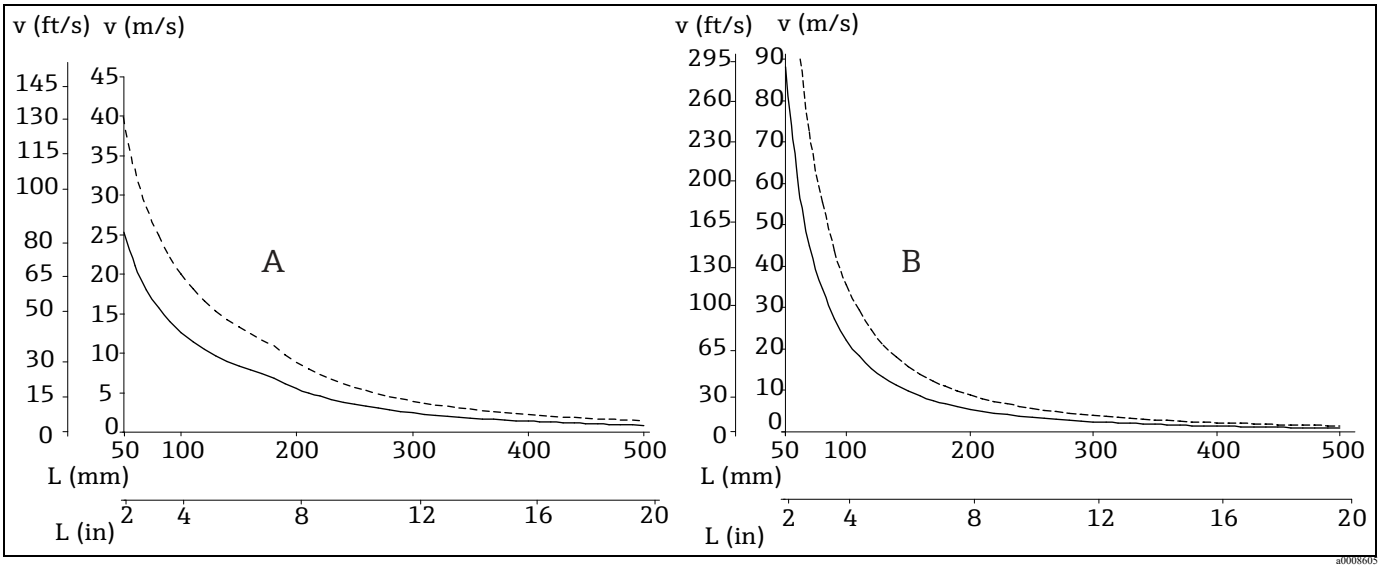

Maximum flow velocity with:
- *Thermowell diameter 9 x 1 mm (0.35 in) ----------*
- *Thermowell diameter 12 x 2.5 mm (0.47 in) - - - - - -*

A Medium water at T = 50 °C (122 °F)
B Medium superheated steam at T = 400 °C (752 °F)
L Immersion length
v Flow velocity

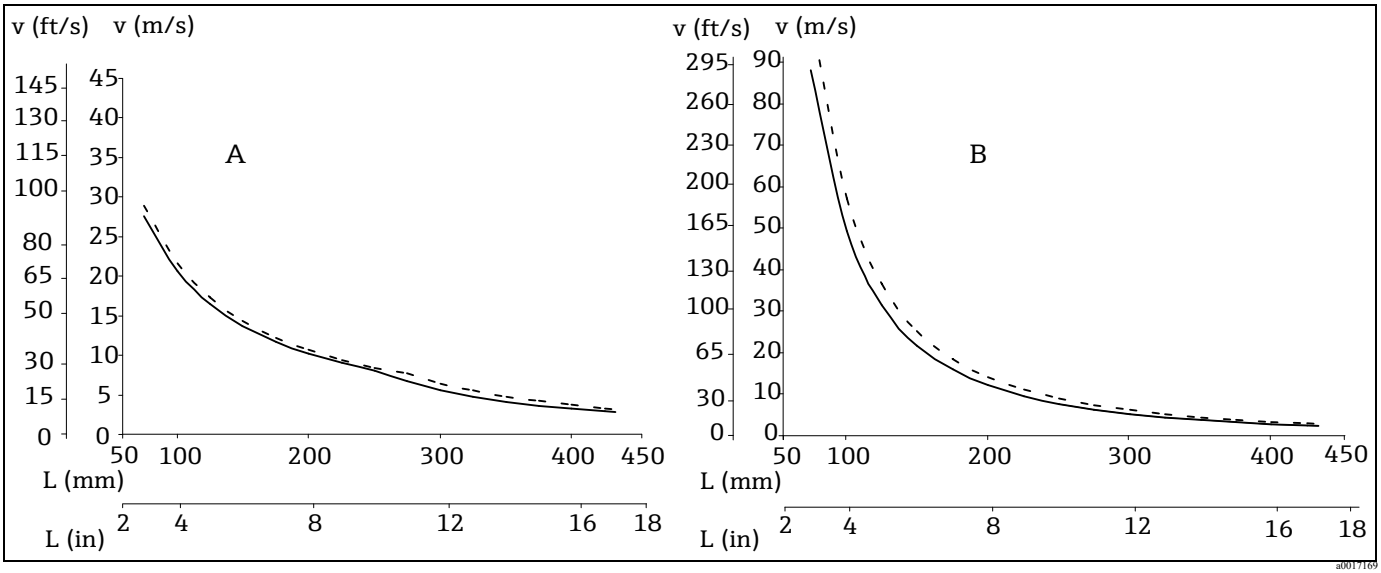

Maximum flow velocity with:
- *Thermowell diameter 14 x 2 mm (0.55 in) ----------*
- *Thermowell diameter 15 x 2 mm (0.6 in) - - - - - -*

A Medium water at T = 50 °C (122 °F)
B Medium superheated steam at T = 400 °C (752 °F)
L Immersion length
v Flow velocity

Shock and vibration resistance

The Endress+Hauser inserts exceed the IEC 60751 requirements stating a shock and vibration resistance of 3g within a range of 10...500 Hz.
The vibration resistance of the measurement point depends on sensor type and construction. Refer to the following table:

Sensor type	Vibration resistance
▪ Pt100 (WW or TF)	▪ 30 m/s² (3g) [1]
▪ iTHERM® StrongSens Pt100 (TF) ▪ iTHERM® QuickSens Pt 100 (TF), execution Ø 6 mm (0.24 in)	▪ >600 m/s² (60g)

1) Vibration resistance also applies for the quick-fastening iTherm QuickNeck.

Accuracy

RTD corresponding to IEC 60751

Class	max. Tolerances (°C)	Characteristics
RTD max. error type TF - range:		
Cl. AA, former 1/3 Cl. B	± (0.1 + 0.0017 · |t| [1])	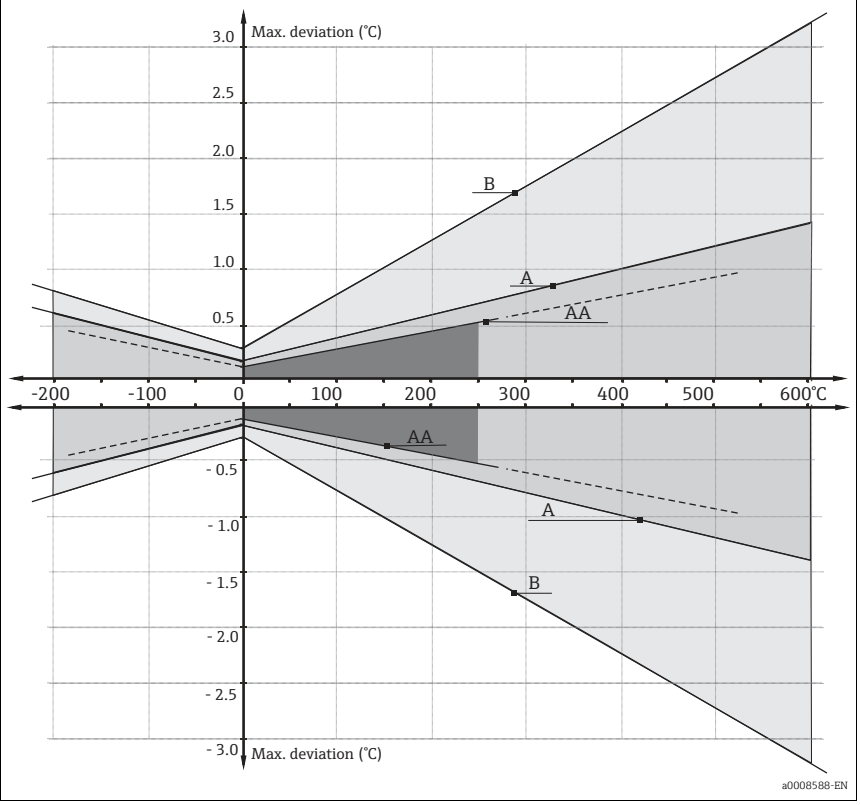
Cl. A	± (0.15 + 0.002 · |t| [1])	
Cl. B	± (0.3 + 0.005 · |t| [1])	

1) |t| = absolute value °C

For measurement errors in °F, calculate using equations above in °C, then multiply the outcome by 1.8.

Response time

Tests in water at 0.4 m/s (1.3 ft/s), according to IEC 60751; 10 K temperature step change. Measuring probe Pt100, TF/WW:

Thermowell				
Diameter	**Response time**	**Reduced tip ∅ 5.3 mm (0.2 in)**	**Tapered tip ∅ 6.6 mm (0.26 in) or ∅ 9 mm (0.35 in)**	**Straight tip**
9 x 1 mm (0.35 in)	t_{50} t_{90}	7.5 s 21 s	11 s 37 s	18 s 55 s
11 x 2 mm (0.43 in)	t_{50} t_{90}	7.5 s 21 s	not available not available	18 s 55 s
12 x 2.5 mm (0.47 in)	t_{50} t_{90}	not available not available	11 s 37 s	38 s 125 s
14 x 2 mm (0.55 in)	t_{50} t_{90}	not available not available	not available not available	21 s 61 s
15 x 2 mm (0.6 in)	t_{50} t_{90}	not available not available	not available not available	22 s 110 s

Response time for the sensor assembly without transmitter.

Insulation resistance

Insulation resistance ≥100 MΩ at ambient temperature.
Insulation resistance between each terminal and the sheath is measured with a voltage of 100 V DC.

Self heating

RTD elements are passive resistances that are measured using an external current. This measurement current causes a self heating in the RTD element itself which in turn creates an additional measurement error. In addition to the measurement current the size of the measurement error is also affected by the temperature conductivity and flow velocity of the process. This self heating error is negligible when an Endress+Hauser iTEMP® temperature transmitter (very small measurement current) is connected.

Calibration specifications

Endress+Hauser provides comparison temperature calibration from -80 to +600 °C (-110 °F to 1112 °F) based on the International Temperature Scale (ITS90). Calibrations are traceable to national and international standards. The calibration report is referenced to the serial number of the thermometer. Only the measurement insert is calibrated.

Insert-Ø: 6 mm (0.24 in) and 3 mm (0.12 in)	**Minimum insertion length IL in mm (in)**	
Temperature range	**without head transmitter**	**with head transmitter**
-80 °C to -40 °C (-110 °F to -40 °F)	200 (7.87)	
-40 °C to 0 °C (-40 °F to 32 °F)	160 (6.3)	
0 °C to 250 °C (32 °F to 480 °F)	120 (4.72)	150 (5.9)
250 °C to 550 °C (480 °F to 1020 °F)	300 (11.81)	
550 °C to 650 °C (1020 °F to 1202 °F)	400 (15.75)	

Material

Extension neck, thermowell and measuring insert.
The temperatures for continuous operation specified in the following table are only intended as reference values for use of the various materials in air and without any significant compressive load. The maximum operation temperatures are reduced considerably in some cases where abnormal conditions such as high mechanical load occur or in aggressive media.

Material name	Short form	Recommended max. temperature for continuous use in air	Properties
AISI 316L/ 1.4404 1.4435	X2CrNiMo17-12-2 X2CrNiMo18-14-3	650 °C (1200 °F)[1]	▪ Austenitic, stainless steel ▪ High corrosion resistance in general ▪ Particularly high corrosion resistance in chlorine-based and acidic, non-oxidizing atmospheres through the addition of molybdenum (e.g. phosphoric and sulfuric acids, acetic and tartaric acids with a low concentration) ▪ Increased resistance to intergranular corrosion and pitting ▪ Compared to 1.4404, 1.4435 has even higher corrosion resistance and a lower delta ferrite content
AISI 316Ti/ 1.4571	X6CrNiMoTi17-12-2	700 °C (1292 °F)[1]	▪ Properties comparable to AISI316L ▪ Addition of titanium means increased resistance to intergranular corrosion even after welding ▪ Broad range of uses in the chemical, petrochemical and oil industries as well as in coal chemistry ▪ Can only be polished to a limited extent, titanium streaks can form
Hastelloy® C276/2.4819	NiMo 16 Cr 15 W	1100 °C (2012 °F)	▪ A nickel-based alloy with good resistance to oxidizing and reducing atmospheres, even at high temperatures ▪ Particularly resistant to chlorine gas and chloride as well as to many oxidizing mineral and organic acids

1) Can be used to a limited extent up to 800 °C (1472 °F) for low compressive loads and in non-corrosive media. Please contact your Endress+Hauser sales team for further information.

Transmitter specifications

	iTEMP® TMT180 PCP Pt100	iTEMP® TMT181 PCP	iTEMP® TMT182 HART®	iTEMP® TMT82[1] HART®	iTEMP® TMT84 PA iTEMP® TMT85 FF
Measurement accuracy	0.2 °C (0.36 °F), optional 0.1 °C (0.18 °F) oder 0.08 %	0.2 °C (0.36 °F) or 0.08 %		0.1 °C (0.18 °F)	
	% is related to the adjusted measurement range (the larger value applies)				
Sensor current	I ≤ 0.6 mA		I ≤ 0.2 mA	I ≤ 0.3 mA	
Galvanic isolation (input/output)	-	U = 2 kV AC			

1) Entire accuracy = 0.1 °C (0.18 °F) + 0.03% (D/A-accuracy)

Transmitter long-term stability

≤ 0.1 °C/year (≤ 0.18 °F / year) or ≤ 0.05% / year
Data under reference conditions; % relates to the set span. The larger value applies.

Components

Family of temperature transmitters

Thermometers fitted with iTEMP® transmitters are an installation ready complete solution to improve temperature measurement by increasing accuracy and reliability, when compared to direct wired sensors, as well as reducing both wiring and maintenance costs.

PC programmable head transmitter iTEMP® TMT180 and iTEMP® TMT181

They offer a high degree of flexibility, thereby supporting universal application with low inventory storage. The iTEMP® transmitters can be configured quickly and easily at a PC. Endress+Hauser offers the ReadWin® 2000 configuration software for this purpose. This software can be downloaded free of charge at www.readwin2000.com. More information can be found in the Technical Information (see "Documentation" section).

iTEMP® HART® TMT182 head transmitter

HART® communication is all about easy, reliable data access and getting additional information about the measurement point more inexpensively. iTEMP® transmitters integrate seamlessly into your existing control system and provide painless access to numerous diagnostic information.
Configuration with a hand-held (Field Xpert SFX100 or DXR375) or a PC with configuration program (FieldCare, ReadWin® 2000) or configure with AMS or PDM. Details see Technical Information (see chapter 'Documentation').

Type of transmitter	Specification
iTEMP® TMT18x 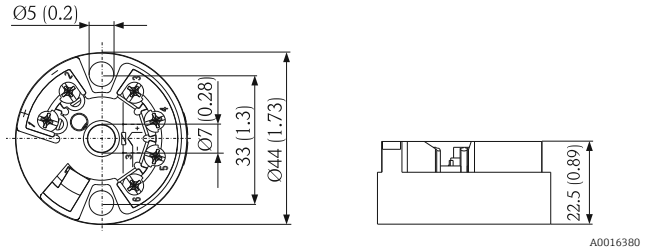 	▪ Material: Housing (PC), Potting (PUR) ▪ Terminals: Cable up to max. ≤ 1.75 mm² / 16 AWG (secure screws) or with wire end ferrules ▪ Eyelets for easy connection of a HART®-handheld terminal with alligator clips ▪ Degree of protection NEMA 4 (see also type of terminal head) Details see Technical Information (see chapter 'Documentation')

HART® programmable head transmitter iTEMP® TMT82

The iTEMP® TMT82 is a 2-wire device with two measurement inputs and one analog output. The device transmits both converted signals from resistance thermometers and thermocouples as well as resistance and voltage signals via the HART® communication. It can be installed as an intrinsically safe apparatus in Zone 1 hazardous areas and is used for instrumentation in the flat face terminal head to DIN EN 50446. Fast and easy operation, visualization and maintenance via PC using configuration software such as FieldCare, Simatic PDM or AMS.
Benefits are:
- Dual sensor input
- maximum reliability
- accuracy and long-term stability for critical processes
- mathematical functions
- monitoring of thermometer drift
- backup function of the sensor,
- diagnostic functions of the sensor and sensor-transmitter matching based on the Callendar/Van Dusen coefficient.

For more information, refer to the Technical Information (see chapter 'Documentation').

PROFIBUS® PA iTEMP® TMT84 head transmitter

Universally programmable head transmitter with PROFIBUS® PA communication. Converting various input signals into a digital output signal. High accuracy over the complete ambient temperature range. Swift and easy operation, visualization and maintenance using a PC directly from the control panel, e. g. using operating software such as FieldCare, Simatic PDM or AMS.
Benefits are: dual sensor input, highest reliability in harsh industrial environments, mathematic functions, thermometer drift monitoring, sensor back-up functionality, sensor diagnosis functions and sensor-transmitter matching using Callendar-Van Dusen coefficients. Details see Technical Information (see chapter 'Documentation').

FOUNDATION Fieldbus™ iTEMP® TMT85 head transmitter

Universally programmable head transmitter with FOUNDATION Fieldbus™ communication. Converting various input signals into a digital output signal. High accuracy over the complete ambient temperature range. Swift and easy operation, visualization and maintenance using a PC directly from the control panel, e. g. using operating software such as ControlCare from Endress+Hauser or the NI Configurator from National Instruments.
Benefits are: dual sensor input, highest reliability in harsh industrial environments, mathematic functions, thermometer drift monitoring, sensor back-up functionality, sensor diagnosis functions and sensor-transmitter matching using Callendar-Van Dusen coefficients. Details see Technical Information (see chapter 'Documentation').

Type of transmitter	Specification
iTEMP® TMT8x 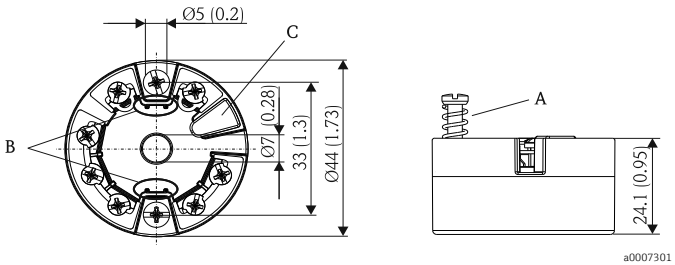 a0007301	▪ Spring range L ≥ 5 mm (0.2"), see Pos. A ▪ Fixing elements for pluggable measured value display, see Pos. B ▪ Interface for contacting measured value display, see Pos. C ▪ Material (RoHS-compliant) Housing: PC Potting: PU ▪ Terminals: Screw terminals (cable up to max. ≤ 2.5 mm² / 16 AWG) or spring terminals (e. g. from 0.25 mm² to 0.75 mm²/ 24 AWG to 18 AWG for flexible wires with wire-end ferrules with plastic ferrule) ▪ Degree of protection NEMA 4 (see also type of terminal head) Details see Technical Information (see chapter 'Documentation')
Pluggable display TID10 as option 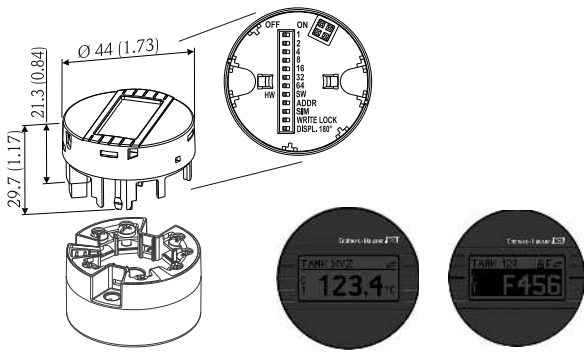 a0009955	▪ Displays the actual measured value and the measurement point identification ▪ Displays fault events in inverse color with channel ident and diagnostics code ▪ DIP-switches on the rear for hardware set-up, e. g. PROFIBUS® PA bus address Display is only available with suitable terminal head with display window, e.g. TA30.

Terminal heads

All terminal heads have an internal shape and size in accordance with DIN EN 50446, flat face and a thermometer connection of M24x1.5. All dimensions in mm (in). The cable glands in the diagrams correspond to M20x1.5 connections. Specifications without head transmitter installed. For ambient temperatures with head transmitter installed, see 'Operating conditions' section.

TA30A	Specification
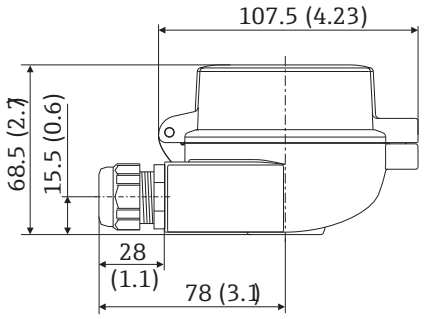	▪ Degree of protection: IP66/68 ▪ Degree of protection: IP66/67 (for ATEX) ▪ Temperature: -50 °C (-58 °F)...+150 °C (+300 °F), w/o cable gland ▪ Material: aluminum, polyester powder coated Seals: silicone ▪ Cable entry incl. glands: ½" NPT and M20x1.5, only thread: G ½", plugs: M12x1 PA, 7/8" FF ▪ Protection armature connection: M24x1.5 ▪ Head color: blue RAL 5012 ▪ Cap color: grey RAL 7035 ▪ Weight: 330 g (11.64 oz)

TA30A with display window	Specification
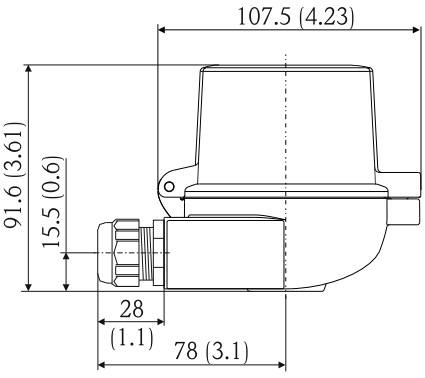	▪ Degree of protection: IP66/68 ▪ Degree of protection: IP66/67 (for ATEX) ▪ Temperature: -50 °C (-58 °F)...+150 °C (+300 °F), w/o cable gland ▪ Material: aluminum, polyester powder coated Seals: silicone ▪ Cable entry incl. glands: ½" NPT and M20x1.5, only thread: G ½", plugs: M12x1 PA, 7/8" FF ▪ Protection armature connection: M24x1.5 ▪ Head color: blue RAL 5012 ▪ Cap color: grey RAL 7035 ▪ Weight: 420 g (14.81 oz) ▪ Head transmitter optional with TID10 display

TA30D	Specification
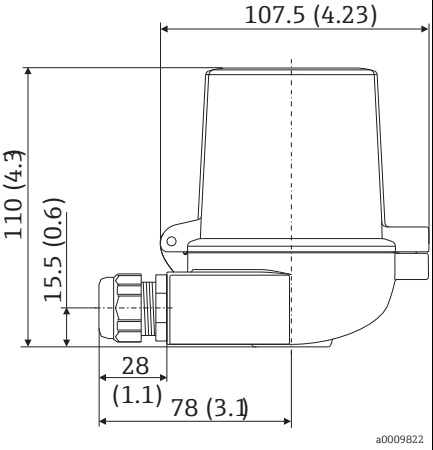	▪ Degree of protection: IP66/68 ▪ Degree of protection: IP66/67 (for ATEX) ▪ Temperature: -50 °C (-58 °F)...+150 °C (+300 °F), w/o cable gland ▪ Material: aluminum, polyester powder coated Seals: silicone ▪ Cable entry incl. glands: ½" NPT and M20x1.5, only thread: G ½", plugs: M12x1 PA, 7/8" FF ▪ Protection armature connection: M24x1.5 ▪ Two head transmitters can be mounted. In the standard version, one transmitter is mounted in the terminal head cover and an additional terminal block is installed directly on the insert. ▪ Head color: blue RAL 5012 ▪ Cap color: grey RAL 7035 ▪ Weight: 390 g (13.75 oz)

TA30P	Specification
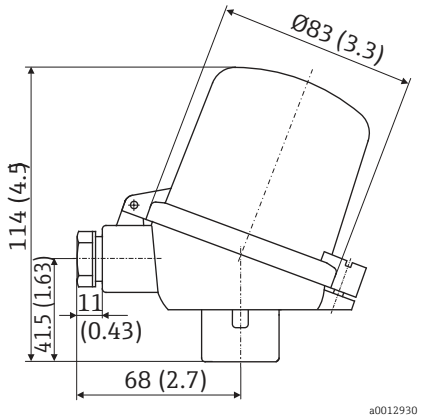	▪ Degree of protection: IP65 ▪ Temperature: -50 °C (-58 °F)...+120 °C (+248 °F), w/o cable gland ▪ Material: polyamide (PA), antistatic Seals: silicone ▪ Cable entry: M20x1.5 ▪ Head and cap color: black ▪ Weight: 135 g (4.8 oz) ▪ Types of protection for use in hazardous locations: Intrinsic Safety (Ex ia)

TA20B	Specification
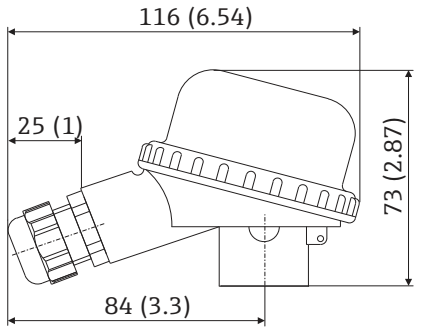	▪ Degree of protection: IP65 ▪ Temperature: -40 °C (-40 °F)...+80 °C (+176 °F), w/o cable gland ▪ Material: polyamide (PA) ▪ Cable entry: M20x1.5 ▪ Head and cap color: black ▪ Weight: 80 g (2.82 oz) ▪ 3-A® marked

TA21E	Specification
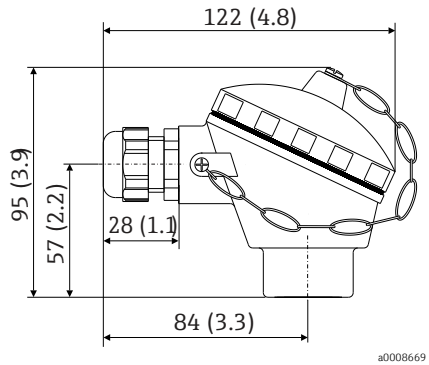	▪ Degree of protection: IP65 ▪ Temperature: -40 °C (-40 °F)...+130 °C (+266 °F) silicone -40 °C (-40 °F)...100 °C (212 °F) rubber, w/o cable gland ▪ Material: aluminum alloy with polyester or epoxy coating; rubber or silicone seal under the cover ▪ Cable entry: M20x1.5 or plug M12x1 PA ▪ Protection armature connection: M24x1.5, G ½" or NPT ½" ▪ Head color: blue RAL 5012 ▪ Cap color: grey RAL 7035 ▪ Weight: 300 g (10.58 oz) ▪ 3-A® marked

TA20R	Specification
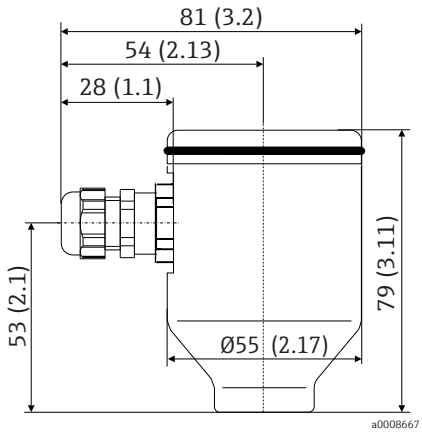	▪ Degree of protection: IP66/67 ▪ Temperature: -40 °C (-40 °F)...+100 °C (+212 °F), w/o cable gland ▪ Material: SS 316L (1.4404) stainless steel ▪ Cable entry: M20x1.5 or plug M12x1 PA ▪ Head and cap color: stainless steel ▪ Weight: 550 g (19.4 oz) ▪ LABS - free 3-A® marked

Maximum ambient temperatures for cable glands and fieldbus connectors	
Type	**Temperature range**
Cable gland ½" NPT, M20x1.5 (non Ex)	-40 to +100 °C (-40 to +212 °F)
Cable gland M20x1.5 (for dust ignition-proof area)	-20 to +95 °C (-4 to +203 °F)
Fieldbus connector (M12x1 PA, 7/8" FF)	-40 to +105 °C (-40 to +221 °F)

Design, dimensions

All dimensions in mm (in).

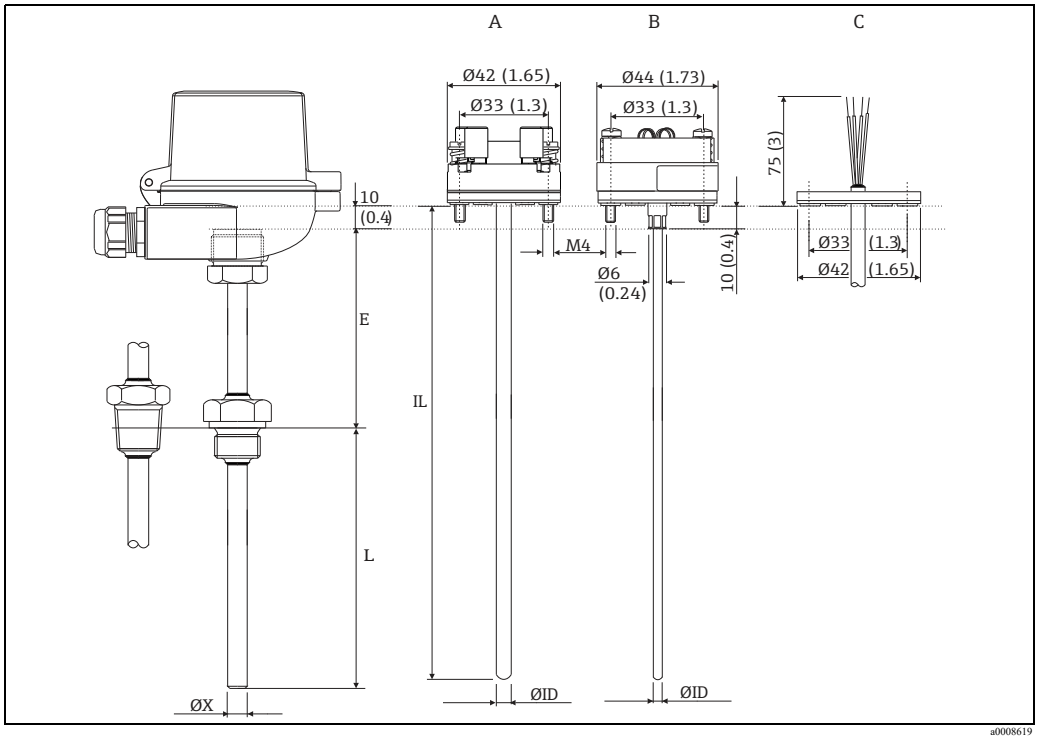

Dimensions of the Omnigrad M TR10

A	Insert with terminal block mounted	∅ ID	Insert diameter
B	Insert with head transmitter mounted	IL	Insertion length = E + L + 10 mm (0.4 in)
C	Insert with flying leads	L	Immersion length
E	Neck tube length	∅ X	Thermowell diameter

Tip shape

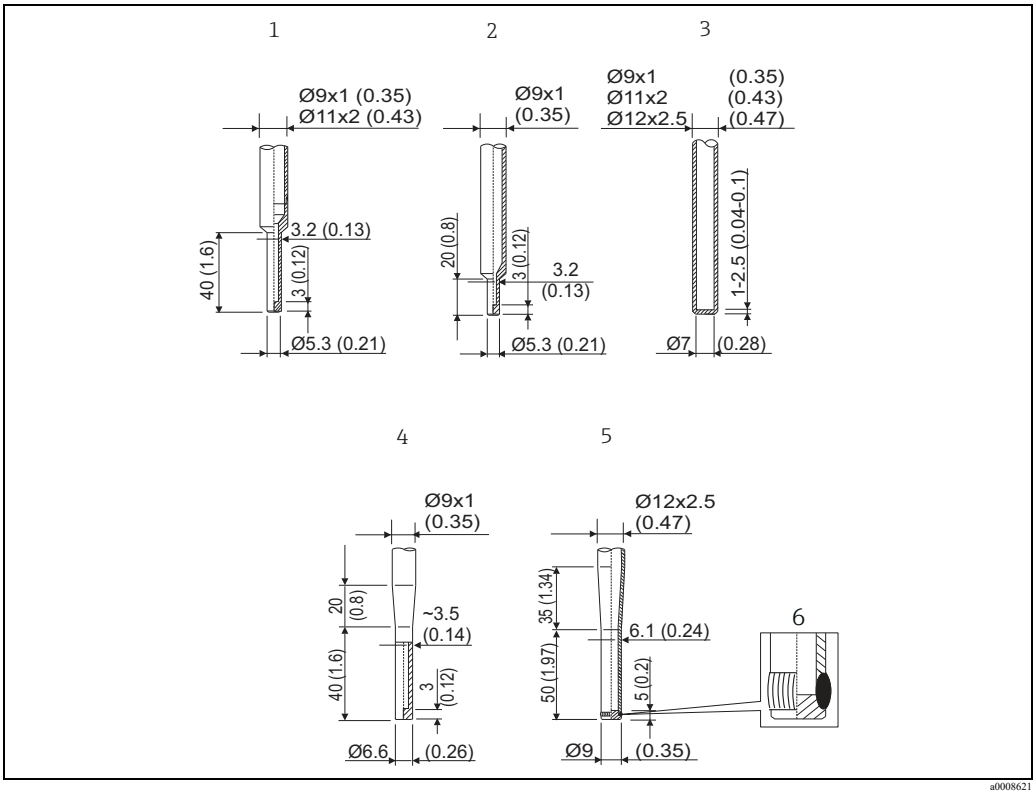

Available versions of thermowell tips (reduced, straight, tapered). Maximum surface roughness ≤Ra 0.8 µm (31.5 µin)

Pos.	Tip shape, L = Immersion length	Insert diameter	Outer diameter ∅D
1	Reduced, L ≥ 70 mm (2.76 in)	∅3 mm (0.12 in)	9 mm (0.35 in), 11 mm (0.43 in)
2	Reduced, L ≥ 50 mm (1.97 in)[1)]	∅3 mm (0.12 in)	9 mm (0.35 in)
3	Straight	∅6 mm (0.24 in)	9 mm (0.35 in), 11 mm (0.43 in), 12 mm (0.47 in), 14 mm (0.55 in), 15 mm (0.59 in)
4	Tapered, L ≥ 90 mm (3.54 in)[1)]	∅3 mm (0.12 in)	9 mm (0.35 in)
5	Tapered DIN43772-3G, L ≥ 115 mm (4.53 in)	∅6 mm (0.24 in)	12 mm (0,47 in)
6	Welded tip, weld quality according to EN ISO 5817 - quality class B		

1) not with material Hastelloy® C276/2.4819

Insert

Depending on the application there are different inserts available for the assembly:

Selection in order code (Pos. RTD; wire; meas. range; class: validity:)	A	B	C	F	G	2	3	6	7	S	T	U	V
Sensor design; wiring type	1x Pt100 WW; 3-wire	2x Pt100 WW; 3-wire	1x Pt100 WW; 4-wire	2x Pt100 WW; 3-wire	1x Pt100 WW; 4-wire	1x Pt100 TF; 3-wire	1x Pt100 TF; 4-wire	1x Pt100 TF; 3-wire	1x Pt100 TF; 4-wire	1x Pt100 TF; 3-wire	1x Pt100 TF; 4-wire	1x Pt100 TF; 3-wire	1x Pt100 TF; 4-wire
Vibration resistance for the tip of the insert	Vibration resistance up to 3g					Increased vibration resistance up to 4g				iTHERM® StrongSens® vibration-resistant up to 60g			
Measuring range; accuracy class with temperature range	-200…600 °C; cl. A, -200…600 °C			-200…600 °C; cl. AA, 0…250 °C		-50…400 °C; cl. A, -50…250 °C		-50…400 °C; cl. AA, 0…150 °C		-50…500 °C; cl. A, -30…300 °C		-50…500 °C; cl. AA, 0…200 °C	
Insert type	TPR100									iTHERM® TS111			
Diameter	Ø3 mm (0.12 in) or Ø6 mm (0.24 in), depending on selected tip shape									Ø6 mm (0.24 in)			

Weight

From 0.5 to 2.5 kg (1 to 5.5 lbs) for standard options.

Process connection

Threaded process connection		Version		Thread length TL in mm (in)	Width across flats SW/AF
Cylindrical (version M, G)	Conical (version NPT, R)	M	M20x1.5	14 (0.55)	27
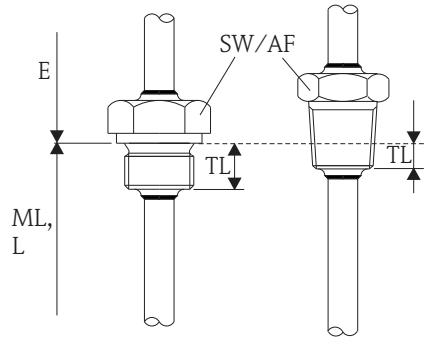 *E = Length of extended neck* *ML, L = Insertion length, immersion length*		G	G½" DIN / BSP	15 (0.6)	27
			G1" DIN / BSP	18 (0.71)	41
			G¾" BSP	15 (0.6)	32
		NPT	NPT ½"	8 (0.32)	22
			NPT ¾"	8,5 (0.33)	27
		R	R ¾" JIS B 0203	8 (0.32)	27
			R ½" JIS B 0203		22

Spare parts

- A thermowell is available as spare part TW10 (see Technical Information in chapter 'Documentation').
- The RTD insert is available as spare part TPR100 or iTHERM® TS111 (see Technical Information in chapter 'Documentation').

If inserts are required as spare parts refer to the following equation:
Insertion length IL = E + L + 10 mm (0.4 in)

Spare part	Material-No.
Gasket M21-G½", copper	60001328
Gasket M27-G¾", copper	60001344
Gasket M33-G1", copper	60001346
Gasket set M24x1.5, aramid+NBR (10 pieces)	60001329

Wiring

Wiring diagrams

Type of sensor connection

Head mounted transmitter TMT18x (single input)

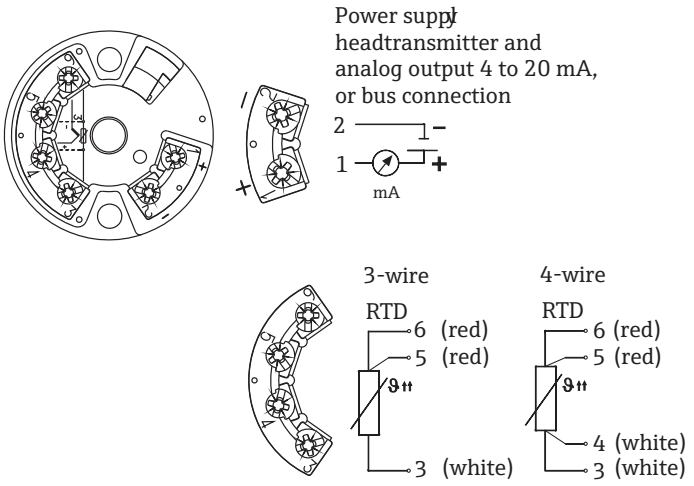

Head mounted transmitter TMT8x (dual input)

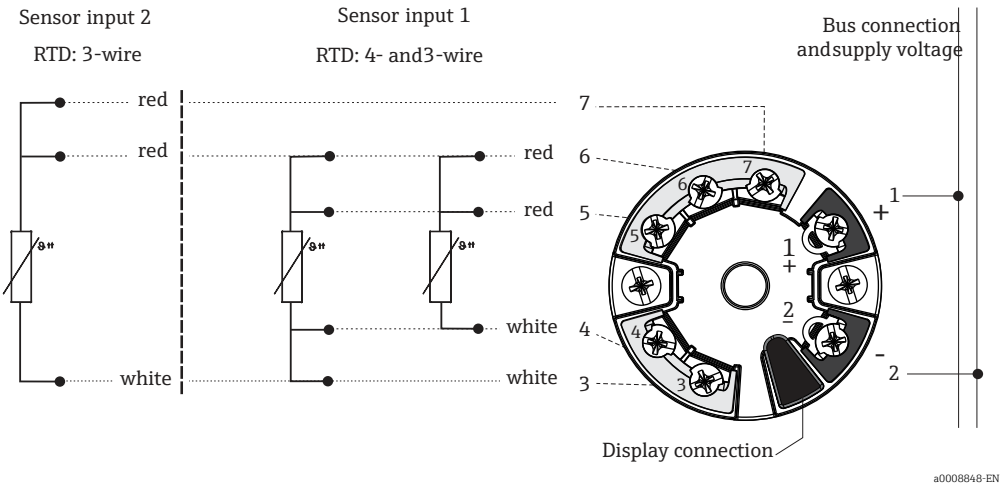

Terminal block mounted

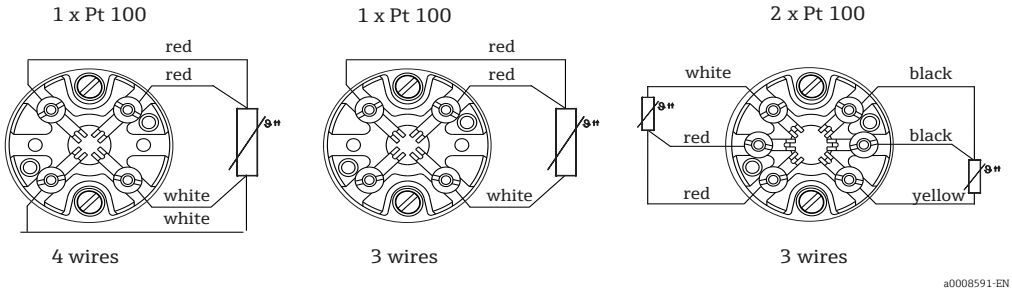

Installation conditions

Orientation

No restrictions.

Installation instructions

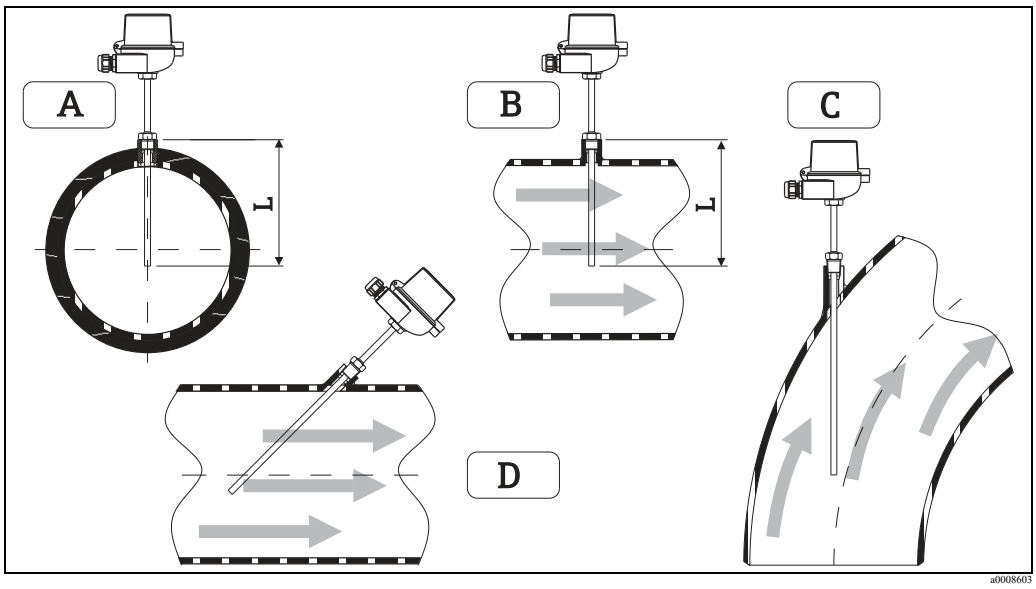

Installation examples

A - B: In pipes with a small cross section the sensor tip should reach or extend slightly past the center line of the pipe (= L).
C - D: Tilted installation.

The immersion length of the thermometer influences the accuracy. If the immersion length is too small then errors in the measurement are caused by heat conduction via the process connection and the container wall. If installing into a pipe then the immersion length should be half of the pipe diameter, if possible (see A and B). A further solution could be an angled (tilted) installation (see C and D). When determining the immersion length all thermometer parameters and the process to be measured must be taken into account (e.g. flow velocity, process pressure).

- Installation possibilities: Pipes, tanks or other plant components
- Recommended minimum immersion length = 80... 100 mm (3.15... 3.94 in)
  The immersion length should correspond to at least 8 times of the thermowell diameter. Example: Thermowell diameter 12 mm (0.47 in) x 8 = 96 mm (3.8 in). A standard immersion length of 120 mm (4.72 in) is recommended
- ATEX certification: Always take note of the installation regulations!

Neck tube length

The neck tube is the part between the process connection and the housing.
As illustrated in the following figure, the neck tube length may influence the temperature in the terminal head. It is necessary that this temperature is kept within the limit values defined in the chapter "Operating conditions".

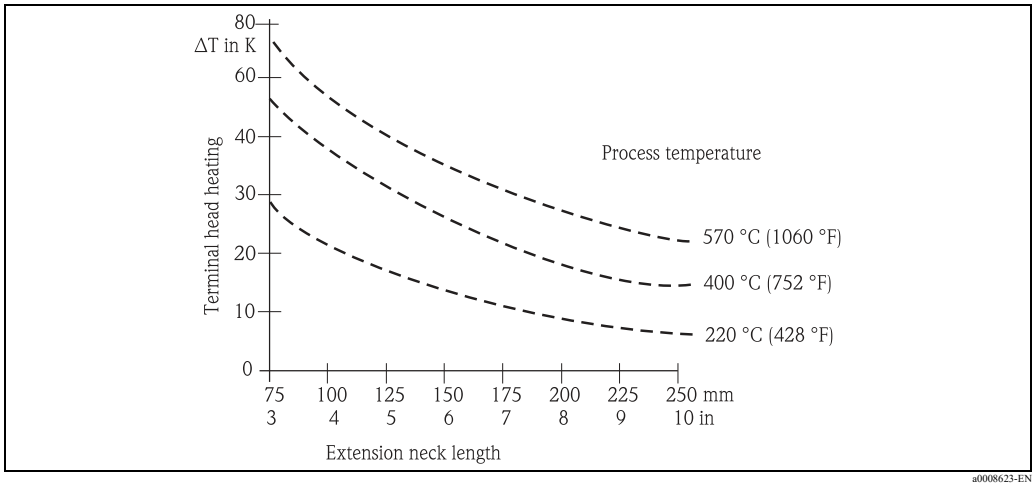

Heating of the terminal head consequent to the process temperature.
Temperature in terminal head = ambient temperature 20 °C (68 °F) + ΔT

Certificates and approvals

CE Mark

The device meets the legal requirements of the EC directives if applicable. Endress+Hauser confirms that the device has been successfully tested by applying the CE mark.

Hazardous area approvals

For further details on the available Ex versions (ATEX, CSA, FM, etc.), please contact your nearest Endress+Hauser sales organization. All relevant data for hazardous areas can be found in separate Ex documentation. If required, please request copies.

Other standards and guidelines

- IEC 60529: Degrees of protection by housing (IP-Code).
- IEC 61010-1: Safety requirements for electrical measurement, control and laboratory instrumentation.
- IEC 60751: Industrial platinum resistance thermometer
- DIN43772: Thermowells
- DIN EN 50446, DIN 47229: Terminal heads
- IEC 61326-1: Electromagnetic compatibility (EMC requirements)

PED approval

The thermometer complies with paragraph 3.3 of the Pressure Equipment Directive (97/23/CE) and is not marked separately.

Material certification

The material certificate 3.1 (according to standard EN 10204) can be directly selected from the sales structure of the product and refers to the parts of the sensor in contact with the process fluid. Other types of certificates related to materials can be requested separately. The "short form" certificate includes a simplified declaration with no enclosures of documents related to the materials used in the construction of the single sensor and guarantees the traceability of the materials through the identification number of the thermometer. The data related to the origin of the materials can subsequently be requested by the client if necessary.

Test on thermowell

Thermowell pressure tests are carried out in accordance with the specifications in the DIN 43772 standard. With regards to thermowells with tapered or reduced tips that do not comply with this standard these are tested using the pressure of corresponding straight thermowells. Sensors certified for use in Ex Zones, are always tested to pressures according to the same criteria. Tests according to other specifications can be carried out on request. Dye penetration tests verify the absence of cracks on the thermowell welding.

Test report and calibration

The "Factory calibration" is carried out according to an internal procedure in a laboratory of Endress+Hauser accredited by the European Accreditation Organization (EA) to ISO/IEC 17025. A calibration which is performed according to EA guidelines (SIT or DKD calibration) may be requested separately. The calibration is performed on the replaceable insert of the thermometer. In the case of thermometers without a replaceable insert, the entire thermometer - from the process connection to the tip of the thermometer - is calibrated.

Ordering information

Product structure

Detailed ordering information is available from the following sources:
- In the Product Configurator on the Endress+Hauser website: www.endress.com → Select country → Instruments → Select device → Product page function: Configure this product
- From your Endress+Hauser Sales Center: www.endress.com/worldwide

Product Configurator - the tool for individual product configuration:
- Up-to-the-minute configuration data
- Depending on the device: Direct input of measuring point-specific information such as measuring range or operating language
- Automatic verification of exclusion criteria
- Automatic creation of the order code and its breakdown in PDF or Excel output format
- Ability to order directly in the Endress+Hauser Online Shop

Documentation

Technical Information:
- RTD Insert for Temperature Sensor Omniset TPR100 (TI268t/02/en)
- Insert for installation in thermometers iTHERM® TS111 (TI01014t/09/en)
- Thermowell for temperature sensors Omnigrad M TW10 (TI261t/02/en)
- Temperature head transmitter:
  - iTEMP® TMT181, PC programmable, single input, RTD, TC, Ω, mV (TI00070r/09/en)
  - iTEMP® Pt TMT180, PC programmable, single input, Pt100 (TI088r/09/en)
  - iTEMP® TMT182 HART®, single input, RTD, TC, Ω, mV (TI078r/09/en)
  - iTEMP® TMT82 HART®, dual input, RTD, TC, Ω, mV (TI01010r/09/en)
  - iTEMP® TMT84 PROFIBUS® PA, dual input, RTD, TC, Ω, mV (TI00138r/09/en)
  - iTEMP® TMT85 FOUNDATION Fieldbus™, dual input, RTD, TC, Ω, mV (TI00134r/09/en)

Hazardous area supplementary documentation:
- Omnigrad TRxx RTD Thermometer ATEX II1GDor II 1/2GD (XA072r/09/a3)
- Omnigrad TRxx, Omniset TPR100, TET10x, TPC100, TEC10x ATEX II 3GD EEx nA (XA044r/09/a3)

Application example

Technical Information:
- RIA16 field display, loop-powered (TI00144R/09/en)
- Active barrier with power supply RN221N (TI073R/09/en)

www.addresses.endress.com

Endress+Hauser
People for Process Automation