FLOWSIC300

Non-custody transfer measurement and process monitoring

Providing cost-effectiveness and quality

- Reliable flow measurement for checking purposes
- Simple installation into existing pipelines
- Efficient solution, especially for pipe diameters over 12 inches, thanks to installation onto existing pipelines and without need for a meter body
- Reduced acquisition costs: the sensor extraction tool can be used for multiple devices
- Low maintenance, wear and no deterioration
- Low operating costs thanks to automated diagnostics and condition-based maintenance
- Suitable for installation in underground compartments via remote electronics and sensors with enclosure rating IP 68



Endress+Hauser
People for Process Automation

Flow measurement that provides both cost-effectiveness and quality

Worldwide, gas in the natural gas networks needs to be measured, even if it is not billed – for example for process monitoring and balancing or for leak detection. Carrying out these measurements using conventional gas flowmeters is not cost-effective in large pipelines. The components used must meet high quality requirements to withstand the most challenging environments.

FLOWSIC300 is the ideal solution for this apparent contradiction: It combines quality components and software to produce an economic gas flowmeter for flexible use. It can be installed into existing pipelines with a space-saving layout. It is suitable both for non-custody transfer measurement of natural gas and for process measurements in the petrochemical industry.

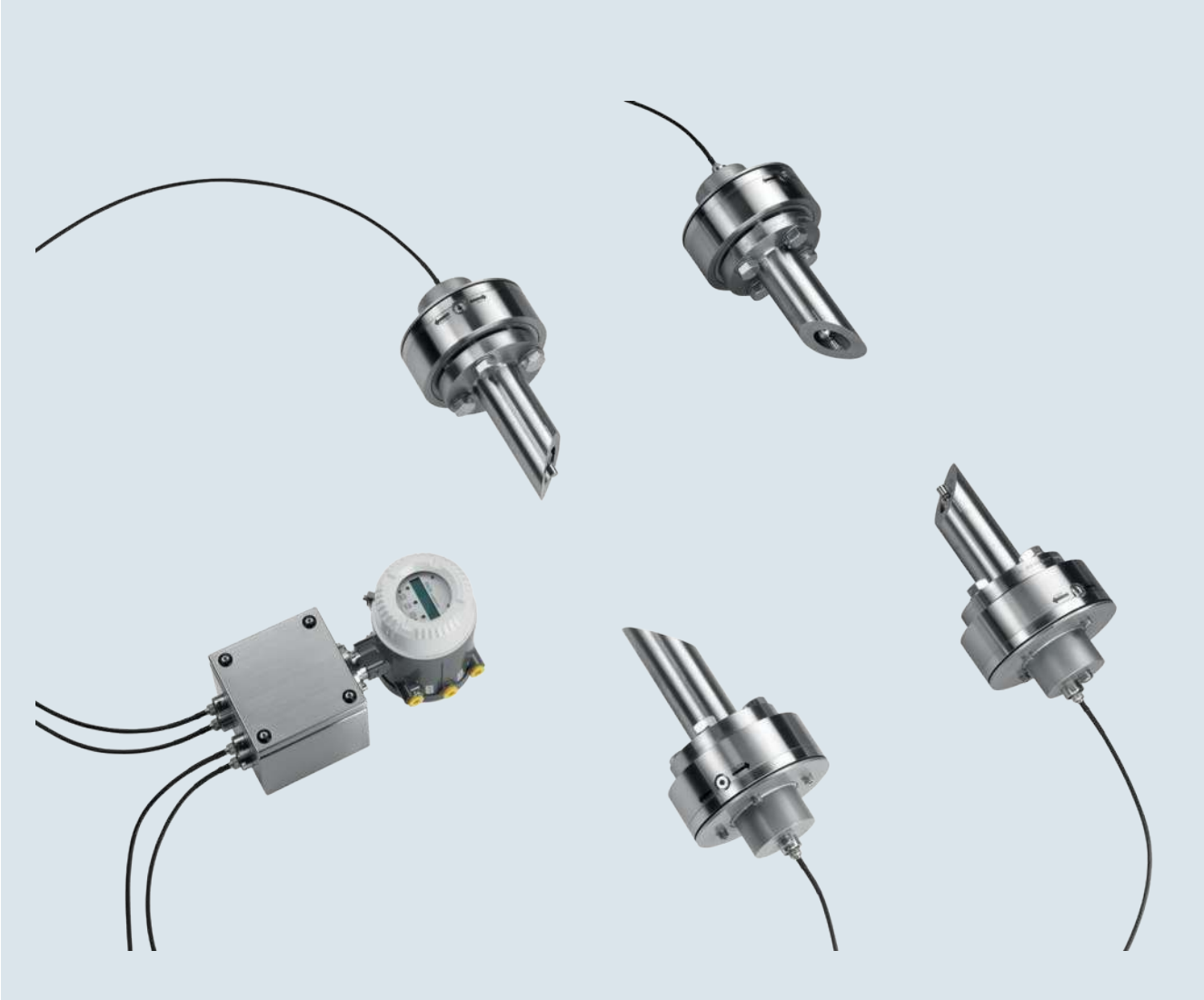

Maximum reliability

The FLOWSIC300 measures gas flow using ultrasonic technology. It operates without mechanically moving parts, and is largely resistant to contamination and wear. FLOWSIC300 incorporates proven technology and components of our custody transfer gas flowmeters. This ensures maximum reliability even in challenging ambient conditions.

Simple installation

The FLOWSIC300 can be installed into existing pipelines in a space-saving layout, it is versatile in usage and installation costs are low. The installation site can be chosen flexibly thanks to remote electronics. Installation in underground compartments is also possible. For installation with the hot-tapping procedure, it is not necessary to interrupt the ongoing process.

Reduced purchase costs

The lack of a meter body reduces investment costs in particular with line sizes over 12 inches. After the installation, only the equipment that is absolutely essential remains on the pipeline. For sensor replacement during operation, a ball valve only forms part of the optional sensor extraction tool that is suitable for different measuring points.

Low operating costs

The ultrasonic measuring principle does not generate any pressure loss, wear and is low maintenance. The integrated diagnostics also continuously monitor the status of the FLOWSIC300 and warn against incorrect measurements before they occur. This means that conditionbased maintenance can be carried out and costs can be reduced. Thanks to the low power consumption, the power supply can even be realized via a solar module.

Integrated volume correction

With the optionally integrated volume correction functionality using recognized algorithms a flow computer is unnecessary in many cases. The pressure and temperature sensors can be fed directly into the FLOWSIC300 to achieve this. An easy-to-implement connection to standard flow computers is still guaranteed where required.

Powerful software

The software offers multiple data and parameter logs, comprehensive reports and continuous self-monitoring of the equipment with early warnings. All this combines to provide an easy-to-understand interface.

Product overview

The FLOWSIC300 is available in 1-path and 2-path configurations. The 1-path configuration is ideal for installation onto pipes with small nominal diameters and for basic control measurements. The 2-path configuration offers a higher level of accuracy, in particular with flow disturbances. Suitable for installation and sensor replacement during ongoing operations is the universal sensor extraction tool that offers maximum security with pressure lock. For the highest possible measurement accuracy and ease-of-use, the FLOWSIC300 can be pre-installed and calibrated in a pipe section (spool).

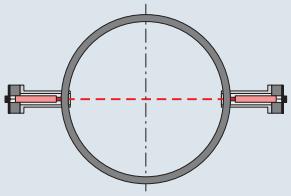

1-path configuration

- Low installation costs
- Ideal for diameters less than 12 inches
- Cost-effective

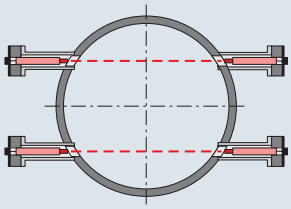

2-path configuration

- Higher measurement accuracy
- Ideal for diameters over 12 inches
- Increased resistance to flow disturbances

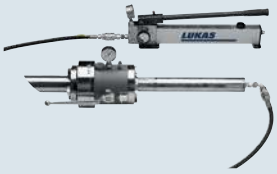

Optional sensor extraction tool

- For installation during ongoing operations (hot-tapping procedure)
- For probe replacement during ongoing operations

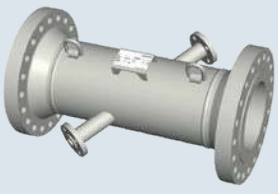

Optional pre-installation into a pipeline

- Can be used universally for all FLOWSIC300 devices
- Maximum measurement accuracy
- Complete configuration at factory
- Easy installation on site

FLOWSIC300: non-custody transfer measurement and process monitoring



Product description

The FLOWSIC300 ultrasonic flowmeter features a unique combination of high quality components, large measuring range, simple installation and low installation costs. It can be used anywhere where custody approval is not required: for internal measurements in the natural gas grid and with process measurements in the petrochemical industry. FLOWSIC300 incorporates proven technology and components of our custody transfer gas flowmeters and combines these to produce a cost-effective flowmeter for a variety of applications. The transmitter at a distance of up to 15 m (49 ft) away from the measuring point facilitates a high level of flexibility in installation and includes continuous self-diagnostics. The ultrasonic measurement principle does not generate any pressure loss, has no moving parts, is resistant to pulsations and pressure regulator noise and is ideal for reliable and drift-free operation.

At a glance

- Quality components
- Modular flexible installation
- Non-contact ultrasonic technology without pressure loss
- Measuring range span greater than 100 : 1
- Sensors can be replaced under pressure
- Low sensitivity to pulsation and pressure regulator noise
- Remote electronics (max. 15 m/49 ft)
- Bi-directional measurement with automated diagnostics

Your benefits

- Reliable flow measurement for checking purposes
- Simple installation into existing pipelines
- Efficient solution, especially for pipe diameters over 12 inches, thanks to installation onto existing pipelines and without need for a meter body
- Reduced acquisition costs – the sensor extraction tool can be used for multiple devices
- Low maintenance, wear and no deterioration
- Low operating costs thanks to automated diagnostics and condition-based maintenance
- Suitable for installation in underground compartments via remote electronics and sensors with enclosure rating IP 68

Fields of application

- Gas flow measurement in non custody transfer applications
- Control measurements in the field of natural gas transfer and storage
- Internal measurements for balancing purposes
- Associated gas measurement
- Efficiency monitoring in gas compressor stations
- Flare gas and process measurements for design pressure of over 16 bar
- Pipeline leakage detection

CE Ex

More Information online

For more information, enter the link or scan the QR code to get direct access to technical data, operating instructions, software, application examples, and much more.
www.endress.com/flowsic300

Technical data

The exact device specifications and product performance data may vary and are dependent on the respective application and customer specifications.

FLOWSIC300

Measured values	Volumetric flow, a. c., volume a. c., gas velocity, sound velocity
Measurement principle	Ultrasonic transit time difference measurement
Number of measuring paths	1, 2
Measuring medium	Natural gas, process gases, high pressure flare gases, air
Measuring ranges	
Gas velocity	0.3 ... 60 m/s (1 ... 196 ft/s); depending on the nominal size of the pipe
Measuring span	Max. 1 : 130
Repeatability	< 0.5 % of the measured value
Uncertainty of measurement	1 % ... 5 % of the measured value (depending on device configuration)
Gas temperature	–40 °C ... +180 °C (–40 °F ... +356 °F)
Operating pressure	10 bar (g) ... 100 bar (g) (145 psi ... 1,450 psi)
Nominal pipe size	4" ... 56"
Ambient temperature	–40 °C ... +60 °C (–40 °F ... +140 °F)
Storage temperature	–40 °C ... +70 °C (–40 °F ... +158 °F)
Ambient humidity	≤ 95 %; relative humidity; non-condensing
Ex-approvals	
ATEX	II 1/2G Ex de iB [ia] IIC Ta
IECEx	Gb/Ga Ex de ib [ia Ga] IIC T4
CSA	On request; the ultrasonic sensors are intrinsically safe: "ia"
Electrical safety	CE
Enclosure rating	
Sender/receiver units	IP 68
SPU control unit	IP 65 / IP 67
Analog outputs	1 output: 4 ... 20 mA, 200 Ω; active/passive, electrically isolated
Digital outputs	3 outputs: passive, electrically isolated, Open Collector or according to NAMUR (EN 50227), f_{max} = 6 kHz (scalable)
Interfaces	1 x RS-485 (for configuration, measured value output and diagnosis)
Bus protocol	Modbus ASCII / RTU; HART
Dimensions (W x H x D)	See dimensional drawings
Weight	
Sender/receiver unit	15 kg (33 lbs)
SPU control unit	6 kg (13 lbs)
Retraction device in case	45 kg (99 lbs)
Adapter 1.5" Cl.600	5 kg (11 lbs)
Mounting	Assembly nozzle 1.5" Cl.600 according ANSI B16.5 for welding on the pipe Length of sensor cables: 5 m or 15 m (16.4 ft or 49 ft) Installation of control unit SPU on 2"-tube or wall mounting
Electrical connection	
Voltage	12 ... 28.8 V; with active analog output: 15 ... 28.8 V
Power consumption	< 1 W

Measuring ranges

FLOWSIC300

Nominal size		Inner diameter, typical	Maximum volume flow a. c.		Maximum velocity
		mm	m^3/h	ft^3/h	m/s
DN 100	4"	102.3	1,700	59,500	60
DN 150	6"	154.1	3,300	115,500	50
DN 200	8"	202.7	5,200	182,000	45
DN 250	10"	254.4	7,300	255,500	40
DN 300	12"	304.8	8,600	301,000	33
DN 350	14"	336.6	10,500	367,500	33
DN 400	16"	387.4	14,000	490,000	33
DN 450	18"	438.2	17,900	626,500	33
DN 500	20"	489	22,300	780,500	33
DN 600	24"	590.6	32,500	1,137,500	33
DN 700	28"	692.2	40,600	1,421,000	30
DN 750	30"	743	46,800	1,638,000	30
DN 800	32"	793.8	53,400	1,869,000	30
DN 900	36"	895.4	68,000	2,380,000	30
DN 1000	40"	992.2	83,500	2,922,500	30
DN 1050	42"	1,043	92,200	3,227,000	30
DN 1100	44"	1,093.8	94,700	3,314,500	28
DN 1200	48"	1,195.4	109,000	3,815,000	27
DN 1300	52" *	1,290	122,300	4,280,500	26
DN 1400	56" *	1,390	136,500	4,777,500	25

The maximum volume flow may be additionally limited by the operation pressure and damping effects.

* Not standardized according to ANSI B36.10.

Ordering information

Our regional sales organization will help you to select the optimum device configuration.

Dimensional drawings

Sender/receiver unit (dimensions in mm (inch))

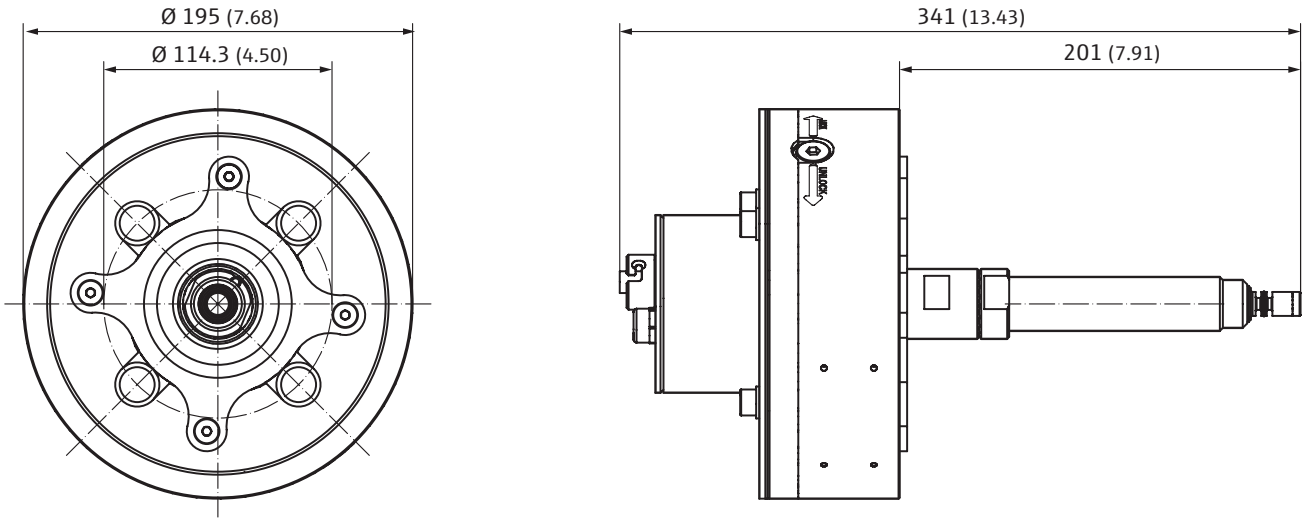

SPU control unit (dimensions in mm (inch))

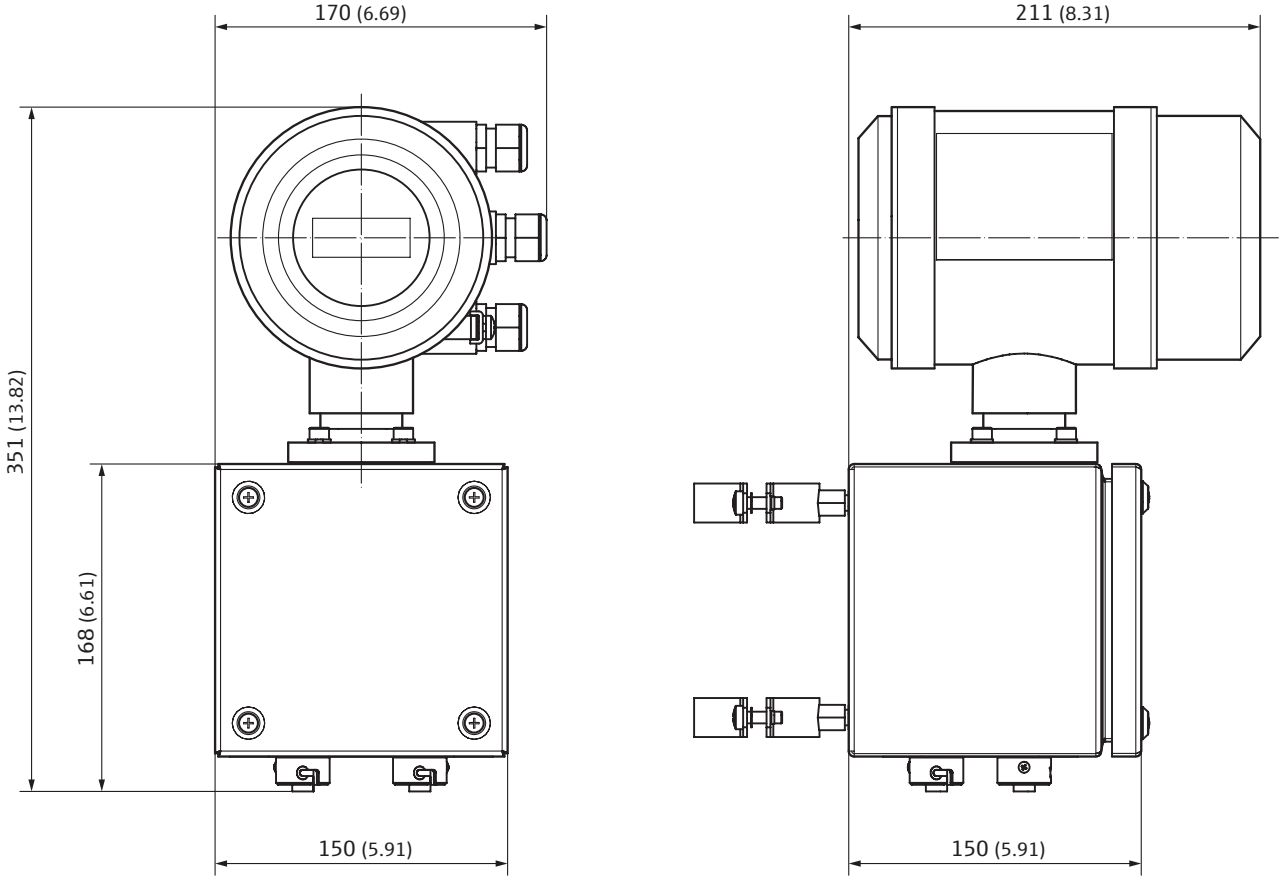

Installation

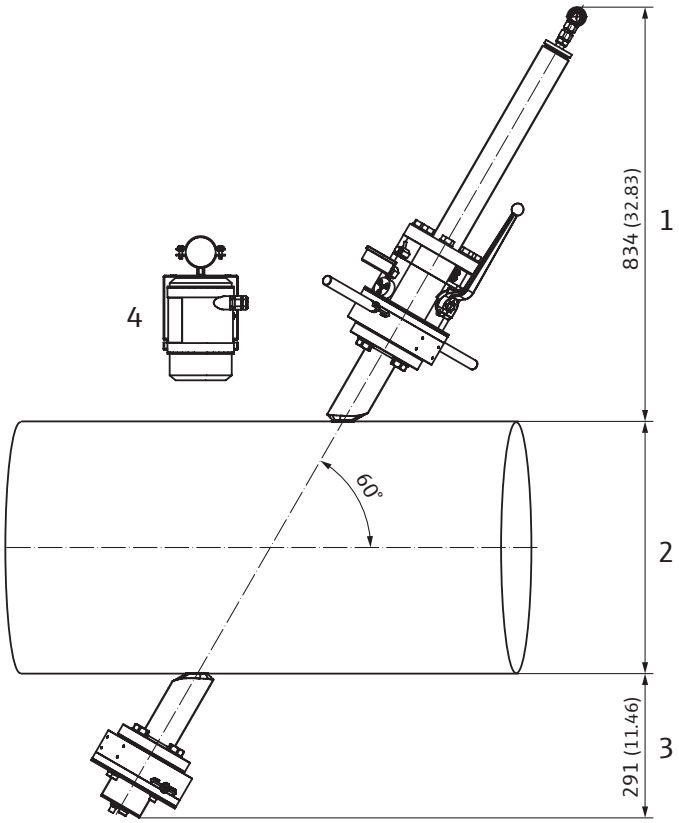

1 Maximum lateral place requirement using the sensor extraction tool
2 Nominal pipe size
3 Maximum lateral place requirement during operation
4 SPU control unit

www.addresses.endress.com

Eco-friendly produced and printed on paper
from sustainable forestry.

IN01389D/90/EN/02.26-00
(8029946 / EN / V4-1)

Endress+Hauser

People for Process Automation