Level | Pressure | Flow | Temperature | Liquid Analysis | Registration | Systems Components | Services | Solutions

Technical Information

Levelflex M FMP41C, FMP45

Guided Level-Radar
Continuous Level Transmitter for
- Level Measurement in Liquids
- Interface Measurement in Liquids



Application

Level measurement

The Levelflex M is used for continuous level measurement of liquids.

FMP41C for corrosive liquids and hygienic requirements

- Highest chemical resistance.
- Rod probes up to 4 m (157"), rope probes up to 30 m (1181") measuring range.
- with rod probe also for food processing and pharmaceuticals.
- All wetted components: PTFE, FDA-listed and USP Class VI compliant, **gap-free**.

FMP45 for highest of pressures and/or temperatures

- Temperature range: -200 °C (-328 °F) to +400 °C (+752 °F).
- Pressure range: -1 to 400 bar (5802 psi).
- With second safety compartment: gas-tight glass feed though.
- Rod and coax probes up to 4 m (157"), rope probes up to 35 m (1378") measuring range.

The following interfaces are available for system integration:

- HART (standard) with 4 to 20 mA analog,
- PROFIBUS PA,
- FOUNDATION Fieldbus.

Interface measurement

Continuous measurement of interfaces between two liquids with very different dielectric constants, such as in the case of oil and water for example.

- Measurement independent of density, conductivity and temperature.
- Electronics version for the simultaneous measurement of the level of interfaces and the total level in liquids. The HART with 4 to 20 mA analog protocol is available for system integration.
- Special version for the measurement of the level of interfaces at a constant total level. The PROFIBUS PA and FOUNDATION Fieldbus protocols are available for system integration.

Your benefits

- **Measurement independent** of product properties as:
  - density,
  - dielectric constant,
  - conductivity.
- **Measurement is also possible in the event of foam or if the surface is very turbulent**.
- Simple, menu-guided onsite operation with four-line plain text display.
- Easy remote operation, diagnosis and measuring point documentation with the free operating program supplied.
- Optional remote display and operation.
- Onsite envelope curve on the display for easy diagnosis.
- Electronics can be replaced without opening the tank.
- Application in safety related systems (overspill protection) with requirements for functional safety up to SIL 2 in accordance with IEC 61508/IEC 61511-1.
- Approvals:
  - Europe: ATEX, EHEDG (FMP41C), PED (FMP45), WHG, steam boiler EN 12952-11/EN 12953-9
  - North America: FM, CSA, boiler act (FMP45).

TI00386F/00/EN/17.12
71198461

Endress+Hauser
People for Process Automation

Table of contents

Function and system design 4
Measuring principle 4
Measuring system 6

Input 11
Measured variable 11
Measuring range 11
Blocking distance 12
Used frequency spectrum 12

Output 13
Output signal 13
Signal on alarm 13
Linearization 13
Data of the FOUNDATION Fieldbus interface 13

Auxiliary energy 15
Electrical connection 15
Ground connection 15
Cable gland 15
Terminals 15
Terminal assignment 16
Connectors 17
Load HART 18
Supply voltage 18
Cable entry 18
Power consumption 18
Current consumption 19
FISCO 19
Overvoltage protection 19

Performance characteristics 20
Reference operating conditions 20
Maximum measured error 20
Resolution 21
Reaction time 21
Influence of ambient temperature 21
Influence of gaslayer 22
Installing FMP45 with Gasphase Compensation (Coax only) 23

Operating conditions: installation with level measurement 24
General information on level measurement 24
Installing FMP45 with heat insulation 28
Special instructions 29

Operating conditions: installation with interface measurement 30
General information on interface measurement 30
Special information on interface measurement 32

Operating conditions: general installation instructions for special installation situations 33
Installation at an angle 33
Replacing a displacer system in an existing displacer chamber . . . 33
Installation for difficult-to-access process connections 34

Operating conditions: Environment 35
Ambient temperature range 35
Ambient temperature limits 35
Storage temperature 36
Climate class 36
Degree of protection 36
Vibration resistance 36
Cleaning the probe 36
Electromagnetic compatibility (EMC) 36

Operating conditions: Process 37
Process temperature range 37
Process pressure limits 38
Dielectric constant 38

Mechanical construction 39
Design, dimensions 39
General information on flanges 42
Tolerance of probe length 42
Weight 42
Material (not in contact with process) 43
Material (in contact with process) 47
Process connection 49
Probe 49

Human interface 50
Operating concept 50
Display elements 50
Operating elements 51
Local operation 52
Remote operation 53

Certificates and approvals 56
CE mark 56
Ex approval 56
Suitability for hygenic processes (Levelflex M FMP41C) 58
Overfill prevention 58
Telecommunications 58
External standards and guidelines 58
Pressure Equipment Directive 58
Steam boiler approval 58

Ordering information 59
Levelflex M FMP41C 59
Levelflex M FMP45 62

Accessories 66
Weather protection cover 66
Welding boss for universal adapter (FMP41C only) 66
Remote display FHX40 67
Center disks 69

Commubox FXA195 HART 70
Commubox FXA291 70
ToF adapter FXA291 70
Mounting-kit isolated (FMP45) 70
Special process connection (only FMP45) 71

Additional documentation 72
Special Documentation 72
Technical Information 72
Operating Instructions 72
Manufacturer declaration 72

Function and system design

Measuring principle

The Levelflex is a "downward-looking" measuring system that functions according to the ToF method (ToF = Time of Flight). The distance from the reference point (process connection of the measuring device, → 🖹 40) to the product surface is measured. High-frequency pulses are injected to a probe and led along the probe. The pulses are reflected by the product surface, received by the electronic evaluation unit and converted into level information. This method is also known as TDR (Time Domain Reflectometry).

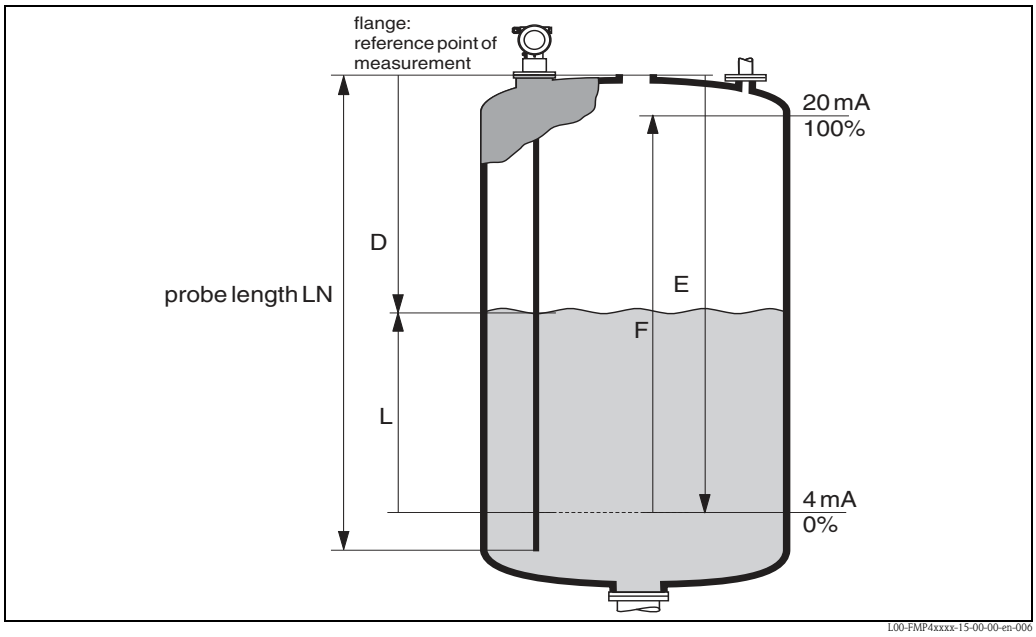

Reference point of measurement, details → 🖹 40

Dielectric constant

The dielectric constant (DC) of the medium has a direct impact on the degree of reflection of the high-frequency pulses. In the case of large DC values, such as for water or ammonia, there is strong pulse reflection while, with low DC values, such as for hydrocarbons, weak pulse reflection is experienced.

Input

The reflected pulses are transmitted from the probe to the electronics. There, a microprocessor analyzes the signals and identifies the level echo which was generated by the reflection of the high-frequency pulses at the product surface. This clear signal detection system benefits from over 30 years' experience with pulse time-of-flight procedures that have been integrated into the development of the PulseMaster® software.
The distance "D" to the product surface is proportional to the time of flight "t" of the impulse:

$D = c \cdot t/2$,
where "c" is the speed of light.

Based on the known empty distance "E", the level "L" is calculated:

$L = E - D$

Reference point for "E" see diagram above.

The Levelflex possesses functions for interference echo suppression that can be activated by the user. They guarantee that interference echoes from e.g. internals and struts are not interpreted as level echoes.

Interface measurement

When the high-frequency pulses hit the surface of the medium, only a percentage of the transmission pulse is reflected. In the case of media with a low DC_1, in particular, the other part penetrates the medium. The pulse is reflected once more at the interface point to a second medium with a higher DC_2. The distance to the interface layer now can also be determined taking into account the delayed time-of-flight of the pulse through the upper medium.

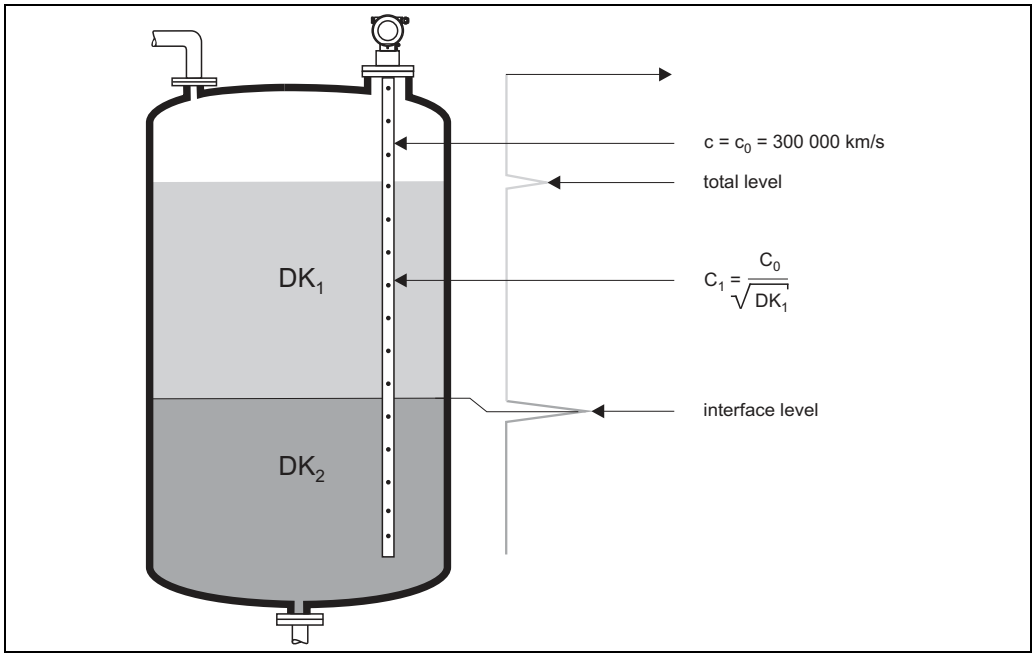

Output

The Levelflex is preset at the factory to the probe length ordered so that in most cases only the application parameters that automatically adapt the device to the measuring conditions need to be entered. For models with a current output, the factory adjustment for zero point "E" and span "F" is 4 mA and 20 mA. For digital outputs and the display module, the factory adjustment for zero point "E" and span "F" is 0 % and 100 %.
A linearization function with max. 32 points, which is based on a table entered manually or semi-automatically, can be activated on site or via remote operation. This function allows the level to be converted into units of volume or mass, for example.

Measuring system

Probe selection

The various types of probe in combination with the process connections are suitable for the following applications:

FMP41C

Completely coated probes for measurement in corrosive/chemically aggressive liquids.

Type of probe:	**Rod probe**	**Rope probe**
		
Wetted materials:	Rod and rope: PFA Flange plating: PTFE (TFM 1600)	
Probe length:	0.3 to 4 m (12" to 157")	1 to 30 m (40" to 1181")
For application:	■ corrosive liquids ■ liquids in the foods/ pharmaceutical sector ■ Interface measurement	■ corrosive liquids
Sideways capacity:	30 Nm	not relevant
Tensile loading capacity (min.):	not relevant	2000 N
Other materials:	Housing: see Ordering information Flange and housing adapter: 316L (1.4435)	
Feature 20:	**Option "K, M"**	**Option "A, B, C, D, E, G"**

FMP45

For the highest of pressures and/or temperatures.

Type of probe:	**Rod probe**	**Separable probe**	**Rope probe**	**Coax probe**
				
Wetted materials:	Stainless steel 316L (1.4404), ceramic Al_2O_3 99.7%, pure graphite, Alloy C22		Stainless steel 316L (1.4435) and 316 (1.4401), ceramic Al_2O_3 99.7%, pure graphite, Alloy C22	Stainless steel 316L (1.4435), ceramic Al_2O_3 99.7%, pure graphite, Alloy C22
Probe length:	0.3 to 4 m (12" to 157")	max. 10 m (394")	1 to 35 m (40" to 1378")	0.3 to 4 m (12" to 157")
For application:	■ Liquids ■ Interface measurement	■ Liquids ■ cramped mountin position (limited head clearance) ■ Interface measurement	■ Liquids	■ Liquids ■ Interface measurement
Sideways capacity:	30 Nm	20 Nm	not relevant	300 Nm
Tensile loading capacity (min.):	not relevant	not relevant	10 kN	not relevant
Other materials:	Housing: see Ordering information Flange and housing adapter: 316L (1.4435)			
Feature 30:	**Option "K, M"**	**Option "S, T, U, V"**	**Option "A, C"**	**Option "L, N"**

Stand-alone

- Power supply directly from power line (4-wire) or from transmitter power supply unit (2-wire).
- Onsite operation with integrated display or remote operation with HART protocol.

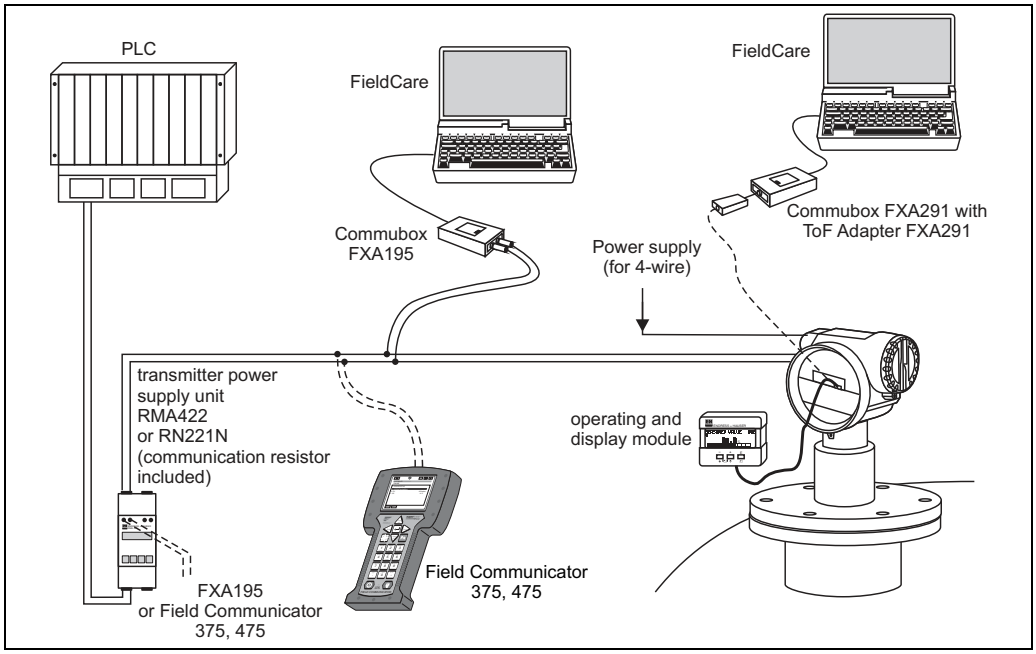

System integration via PROFIBUS PA

Maximum 32 transmitters (depending on the segment coupler, 10 in the Ex ia IIC hazardous area according to the FISCO Model) can be connected to the bus. The Bus voltage is supplied by the segment coupler. Both onsite as well as remote operation are possible.

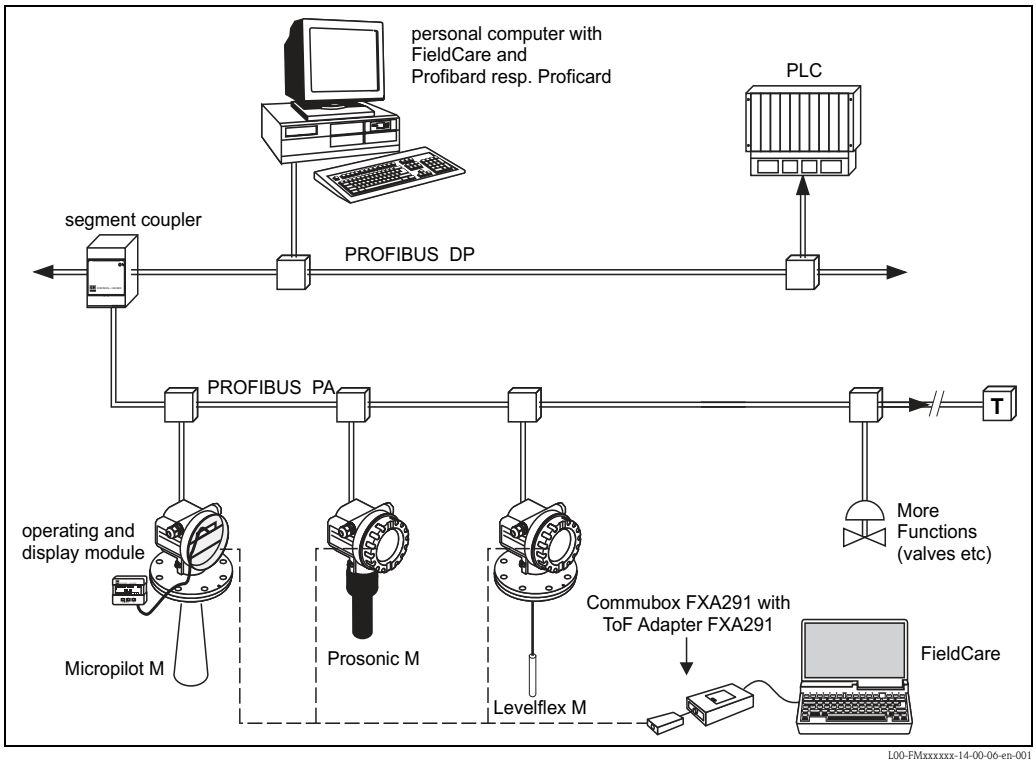

System integration via FOUNDATION Fieldbus

Max. 32 transmitters (standard, Ex em or Ex d) can be connected to the bus. In Ex ia IIC explosion protection: the max. number of transmitters is based on the applicable regulations and standards for interconnecting intrinsically safe circuits (EN 60079-14, proof of intrinsic safety). Both onsite as well as remote operation are possible. The complete measuring system consists of:

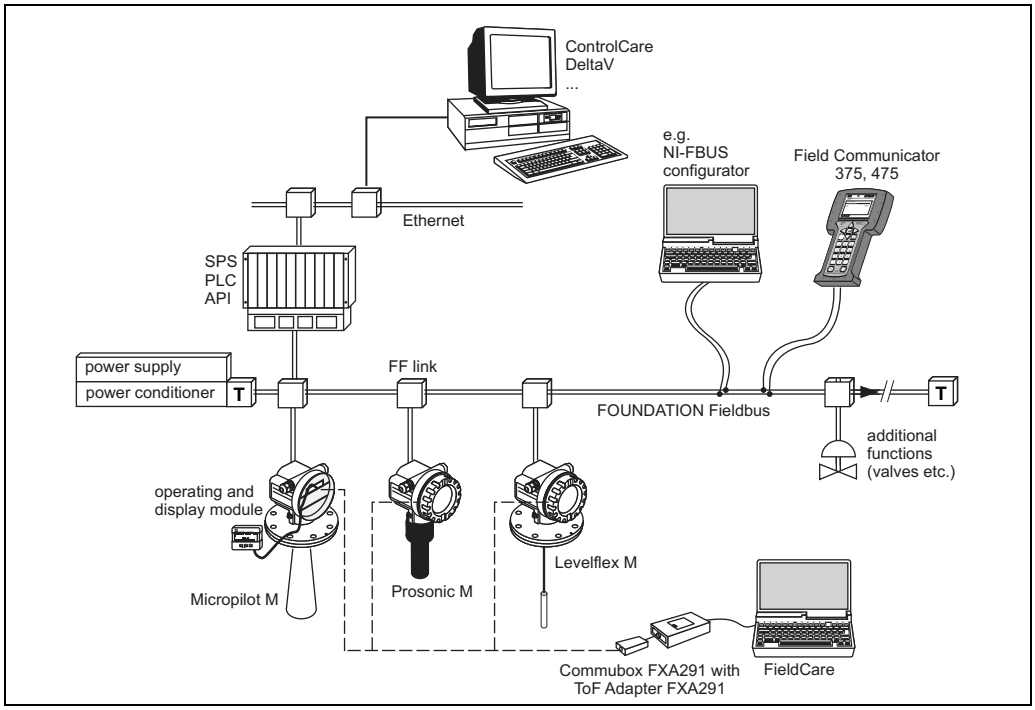

L00-FMxxxxxx-14-00-06-en-011

Integration into the tank gauging system

The Endress+Hauser Tank Side Monitor NRF590 provides integrated communications for sites with multiple tanks, each with one or more sensors on the tank, such as radar, spot or average temperature, capacitive probe for water detection and/or pressure sensors. Multiple protocols out of the Tank Side Monitor guarantee connectivity to nearly any of the existing industry standard tank gauging protocols. Optional connectivity of analog 4 to 20 mA sensors, digital I/O and analog output simplify full tank sensor integration. Use of the proven concept of the intrinsically safe HART bus for all on-tank sensors yields extremely low wiring costs, while at the same time providing maximum safety, reliability and data availability.

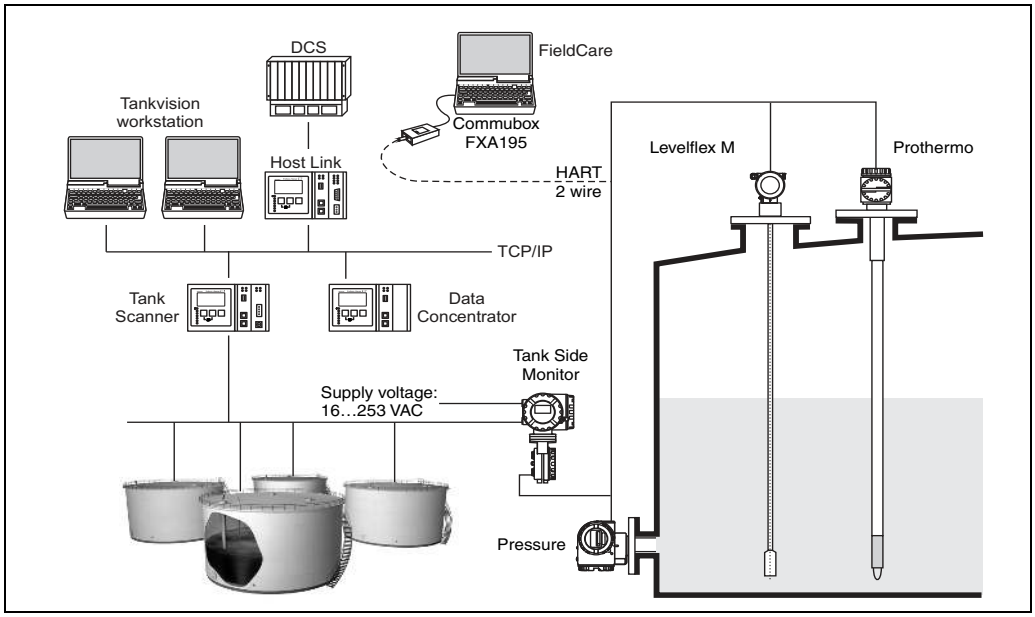

L00-FMPxxxxx-14-00-06-en-004

System integration via Fieldgate

Vendor Managed Inventory

By using Fieldgates to interrogate tank or silo levels remotely, suppliers of raw materials can provide their regular customers with information about the current supplies at any time and, for example, account for them in their own production planning. For their part, the Fieldgates monitor the configured level limits and, if required, automatically activate the next supply. The spectrum of options here ranges from a simple purchasing requisition via e-mail through to fully automatic order administration by coupling XML data into the planning systems on both sides.

Remote maintenance of measuring equipment

Fieldgates not only transfer the current measured values, they also alert the responsible standby personnel, if required, via e-mail or SMS. In the event of an alarm or also when performing routine checks, service technicians can diagnose and configure connected HART devices remotely. All that is required for this is the corresponding HART operating software (e.g. FieldCare) for the connected device. Fieldgate passes on the information transparently, so that all options for the respective operating software are available remotely. Some onsite service operations can be avoided by using remote diagnosis and remote configuration and all others can at least be better planned and prepared.

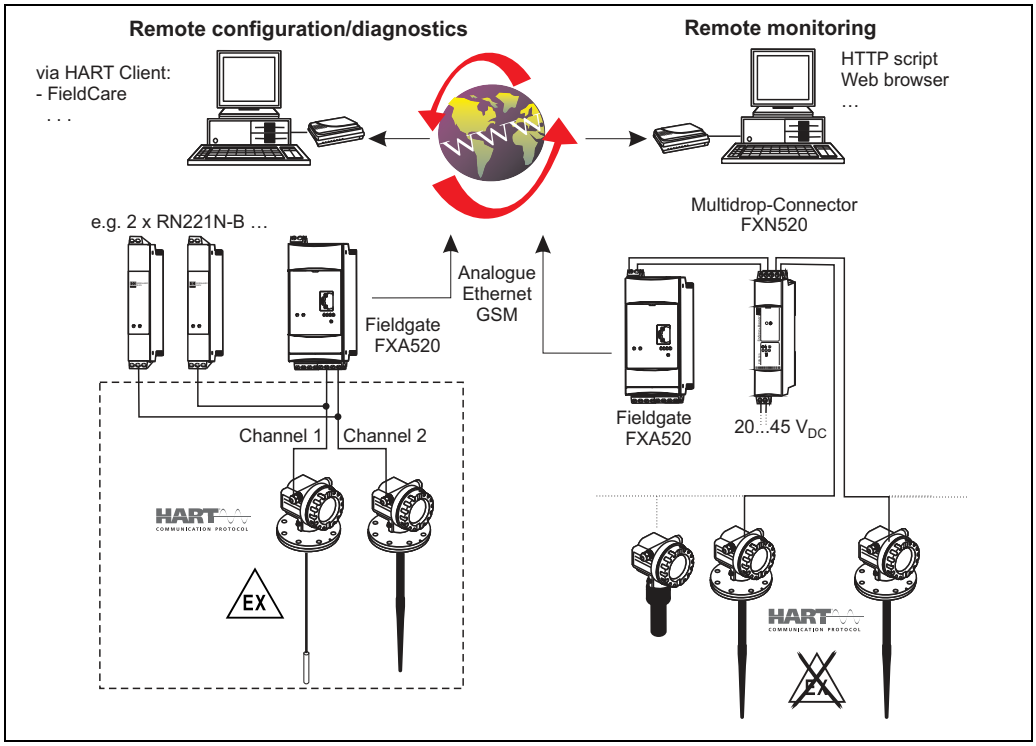

L00-FXA520xx-14-00-06-en-009

Note!
The number of devices which can be connected in multidrop mode can be calculated by the "FieldNetCalc" program. A description of this program can be found in Technical Information TI00400F/00/EN (Multidrop Connector FXN520). The program is available from your Endress+Hauser sales organization or on the Internet at: www.endress.com → select your country → download → search: Fieldnetcalc.

Input

Measured variable

The measured variable is the distance between the reference point (see Fig., → 📄 40) and the product surface. Subject to the empty distance entered "E" (see Fig., → 📄 4), the level is calculated. Alternatively, the level can be converted into other variables (volume, mass) by means of linearization (32 points).

Measuring range

Level measurement

The following table describes the media groups and the possible measuring range as a function of the media group.

Medium group	DC (Εr)	Typical liquids	Typical measuring range FMP41C	Typical measuring range FMP45
1	1.4 to 1.6	– Condensed gases, e.g. N_2, CO_2	4 m (157"), when installed in metallic pipes	4 m (157"), coax probe, rod probe when installed in metallic pipes
2	1.6 to 1.9	– Liquefied gas, e.g. propane – Solvent – Freon – Palm oil	9 m (354")	25 m (984")
3	1.9 to 2.5	– Mineral oils, fuels	12 m (472")	30 m (1181")
4	2.5 to 4	– Benzene, styrene, toluene – Furan – Naphthalene	16 m (629")	35 m (1377")
5	4 to 7	– Chlorobenzene, chloroform – Cellulose spray – Isocyanate, aniline	25 m (984")	35 m (1377")
6	> 7	– Aqueous solutions – Alcohols – Acids, alkalis	30 m (1181")	35 m (1377")

Note!
Due to the high diffusion rate of ammonia it is recommended to use the FMP45 with gas-tight bushing for measurements in this medium.

Interface measurement

The measuring range for interface measurement is limited to 10 m. Larger measuring range available on request.

Blocking distance

The upper blocking distance (=UB) is the minimum distance from the reference point of the measurement (mounting flange) to the maximum level. At the lowest part of the probe an exact measurement is not possible, see "Performance characteristics", → 📄 20.

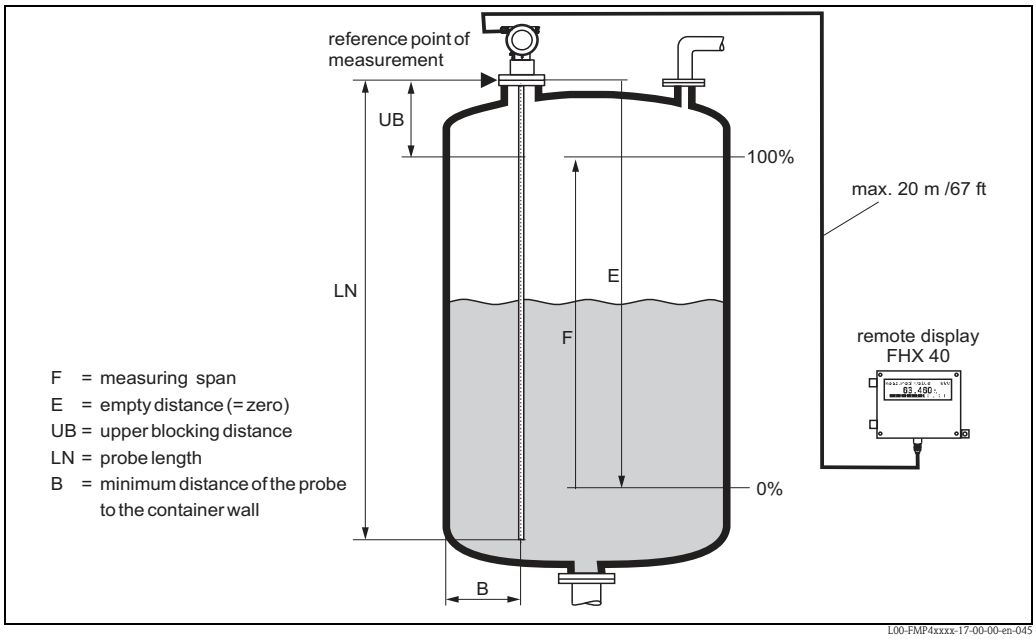

Reference point of the measurement, details → 📄 40

Blocking distances and measuring range depending on probe type, for DC ≥ 1.6 for FMP41C and FMP45:

Probe type	LN [m] min	LN [m] max	UB [m] min
Rod probe	0.3	4	0.2 [1]
Rope probe	1	35 [2] (FMP41C: 30)	0.2 [1]
Coax probe (not FMP41C)	0.3	4	0

1) The indicated blocking distances are preset. At media with DC > 7, the upper blocking distance UB can be reduced for rod and rope probes on 0.1 m. The upper blocking distance UB can be entered manually.

2) Larger measuring range available on request.

Note!
Within the blocking distance, a reliable measurement can not be guaranteed.

Blocking distances and measuring range depending on probe type (interface)

Probe type	LN [m] min	LN [m] max	UB [m] min
Rod probe in bypass	0.3	4	0.1 [1]
Rope probe in free field (not FMP41C)[2]	1	35 [3]	0.1[1]
Coax probe (not FMP41C)	0.3	4	0

1) The indicated blocking distances are preset.

2) Measurements in free field available on request.

3) Larger measuring range available on request.

Used frequency spectrum

100 MHz to 1.5 GHz

Output

Output signal

- 4 to 20 mA (invertible) with HART protocol
- PROFIBUS PA:
  - signal coding: Manchester Bus Powered (MBP)
  - data transmission rate: 31.25 KBit/s, voltage mode
- FOUNDATION Fieldbus (H1):
  - signal coding: Manchester Bus Powered (MBP)
  - data transmission rate: 31.25 KBit/s, voltage mode

Signal on alarm

Error information can be accessed via the following interfaces:
- Local display:
  - Error symbol
  - Plain text display
- Current output, signal on error can be selected (e.g. according to NAMUR Recommendation NE43)
- Digital interface

Linearization

The linearizsation function of the Levelflex M allows the conversion of the measured value into any unit of length or volume and mass or %. Linearization tables for calculating the volume in cylindrical tanks are preprogrammed. Other tables of up to 32 value pairs can be entered manually or semi-automatically.
The creation of a linearization table with FieldCare is particularly convenient.

Data of the FOUNDATION Fieldbus interface

Basic Data

Device Type	1012 (hex)
Device Revision	04 (hex)
DD Revision	02 (hex)
CFF Revision	02 (hex)
ITK Version	4.61
ITK-Certification Driver-No.	www.endress.com / www.fieldbus.org
Link-Master (LAS) cabable	Yes
Link Master / Basic Device selectable	Yes; Default: Basic Devce
Number VCRs	24
Number of Link-Objects in VFD	24

Virtual communication references (VCRs)

Permanent Entries	1
Client VCRs	0
Server VCRs	24
Source VCRs	23
Sink VCRs	0
Subscriber VCRs	23
Publisher VCRs	23

Link Settings

Slot time	4
Min. Inter PDU delay	6
Max. response delay	10

Transducer Blocks

Block	Content	Output values
Sensor Block	Contains all parameters related to the measurement	■ level or volume[1] (channel 1) ■ distance (channel 2)
Diagnsotic Block	Contains diagnostiv information	No output values
Display Block	Contains parameters to configure the local display	No output values

1) Depending on the configuration of the sensor-block.

Function Blocks

Block	Content	Execution time	Functionality
Resource Block	The Resource Block contains all the data that uniquely identifies the field device. It is an electronic version of a nameplate of the device.		enhanced
Analog Input Block 1 Analog Input Block 2	The AI block takes the manufacturer's input data, selected by channel number, and makes it available to other function blocks at its output.	30 ms	standard
PID Block	The PID block serves as proportional-integral-derivative controller and is used almost universally to do closed-loop-control in the field including cascade and feedforward.	80 ms	standard
Arithmetic Block	This block is designed to permit simple use of popular measurement math functions. The user does not have to know how to write equations. The math algorithm is selected by name, chosen by the user for the function to be done.	50 ms	standard
Input Selector Block	The input selector block provides selection of up to four inputs and generates an output based on the configured action. This block normally receives its inputs from AI blocks. The block performs maximum, minimum, middle, average and 'first good' signal selection.	30 ms	standard
Signal Characterizer Block	The signal characterizer block has two sections, each with an output that is a non-linear function of the respective input. The non-linear function is determined by a single look-up table with 21 arbitrary x-y pairs.	40 ms	standard
Integrator Block	The Integrator Function Block integrates a variable as a function of the time or accumulates the counts from a Pulse Input block. The block may be used as a totalizer that counts up until reset or as a batch totalizer that has a setpoint, where the integrated or accumulated value is compared to pre-trip and trip settings, generating discrete signals when these settings are reached.	60 ms	standard

Auxiliary energy

Electrical connection

Connection compartment

Three housings are available:
- Aluminum housing F12 with additionally sealed connection compartment for:
  - standard
  - Ex ia.
- Aluminum housing T12 with separate connection compartment for:
  - standard
  - Ex e
  - Ex d
  - Ex ia (with overvoltage protection).
- Stainless steel 316L (1.4435) housing F23 for:
  - standard
  - Ex ia.

After mounting, the housing can be turned 350° in order to make it easier to access the display and the connection compartment.

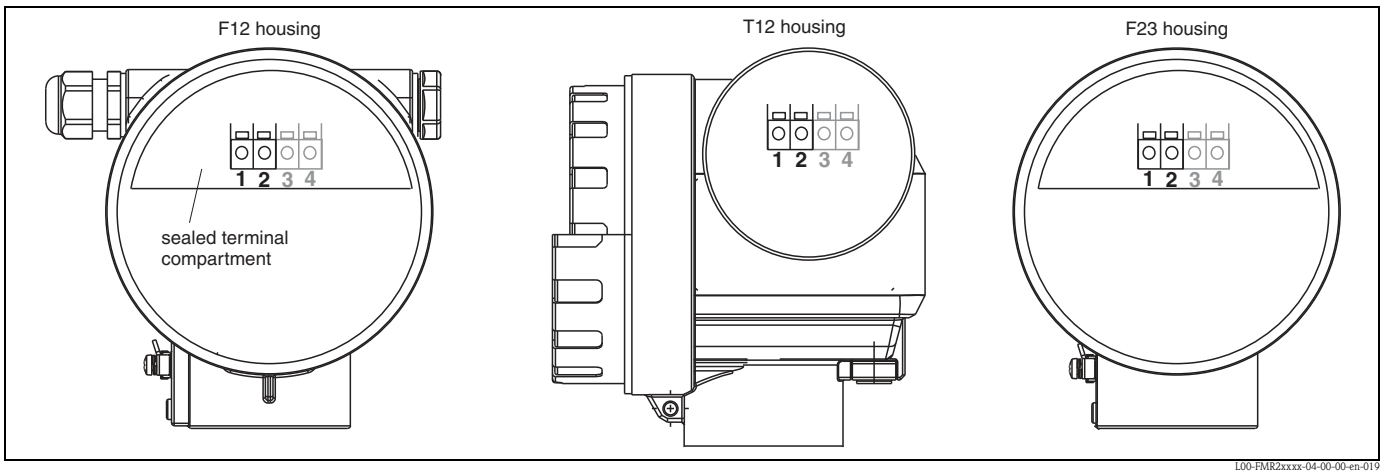

Ground connection

It is necessary to make a good ground connection to the ground terminal on the outside of the housing, in order to achieve EMC security.

Cable gland

Type		Clamping area
Standard, Ex ia, IS	Plastic M20x1.5	5 to 10 mm
Ex em, Ex nA	Metal M20x1.5	7 to 10.5 mm

Terminals

For wire cross-sections of 0.5 to 2.5 mm^2.

Terminal assignment

2-wire, 4 to 20 mA with HART

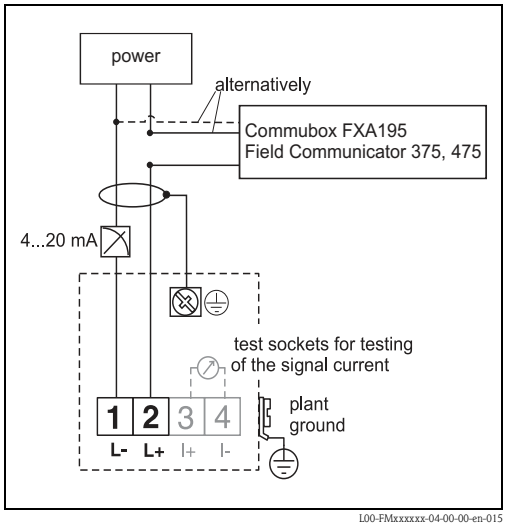

4-wire, 4 to 20 mA active with HART

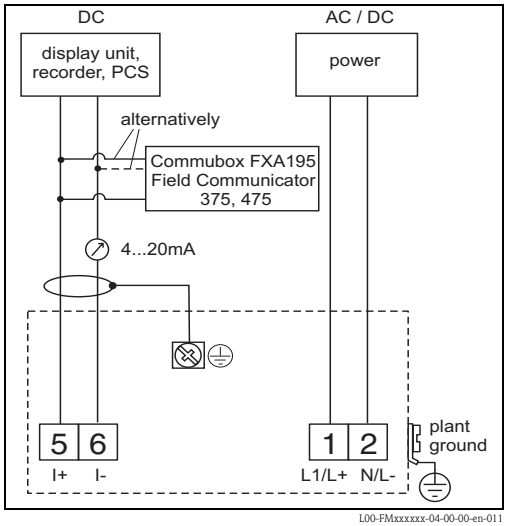

Note!
If 4-wire for dust-Ex-applications is used, the current output is intrinsically save.

Connect the connecting line to the screw terminals in the terminal compartment.

Cable specification:
A standard installation cable is sufficient if only the analog signal is used. Use a shielded cable when working with a superimposed communications signal (HART).

Note!
- Protective circuitry against reverse polarity, RFI and over-voltage peaks is built into the device (see also TI00241F/00/EN "EMC Test Procedures").
- See TI00402F/00/EN for connection to Tank Side Monitor NRF590.

PROFIBUS PA
The digital communication signal is transmitted to the bus via a 2-wire connection. The bus also provides the auxiliary energy. For further information on the network structure and grounding and for further bus system components such as bus cables, see the relevant documentation, e.g. Operating Instructions BA034S/04/EN "Guidelines for planning and commissioning PROFIBUS DP/PA" and the PNO Guideline.

Cable specification:
Use a twistes, shielded two-wire cable, preferably cable type A.

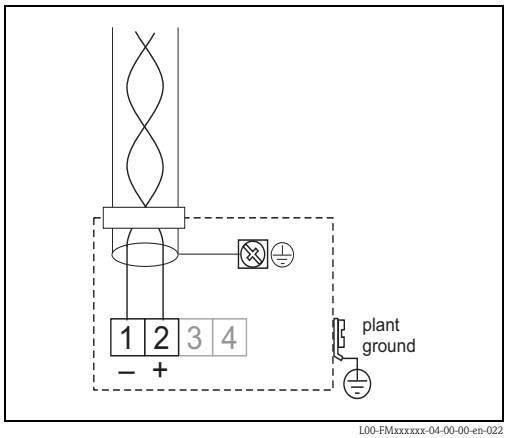

Note!
For further information on the cable specifications, see Operating Instructions BA034S/04/EN Guidelines for planning and commissioning PROFIBUS DP/PA", PNO Guideline 2.092 " PROFIBUS PA User and Installation Guideline" and IEC 61158-2 (MBP).

FOUNDATION Fieldbus
The digital communication signal is transmitted to the bus via a 2-wire connection. The bus also provides the auxiliary energy. For further information on the network structure and grounding and for further bus system components such as bus cables, see the relevant documentation, e.g. Operating Instructions BA013S/04/EN "FOUNDATION Fieldbus Overview" and the FOUNDATION Fieldbus Guideline.

Cable specification:
Use a twisted, shielded two-wire cable, preferably cable type A.

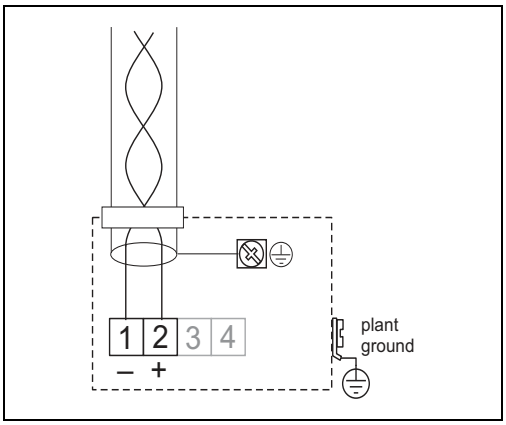

L00-FMxxxxxx-04-00-00-en-022

Note!
For further information on the cable specifications, see Operating Instructions BA013S/04/EN "FOUNDATION Fieldbus Overview", FONDATION Fieldbus Guideline and IEC 61158-2 (MBP).

Connectors

For the versions with a connector M12 or 7/8", the housing does not have to be opened for connecting the signal line.

PIN assignment for M12 connector

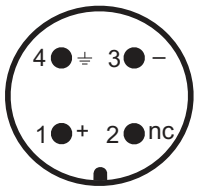

A0011175

PIN	Meaning
1	Signal +
2	Not assigned
3	Signal –
4	Earth

PIN assignment for 7/8" connector

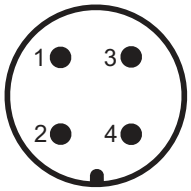

A0011176

PIN	Meaning
1	Signal –
2	Signal +
3	Shield
4	Not assigned

Load HART

Minimum load for HART communication: 250 Ω

Supply voltage

HART, 2-wire

All the following values are the terminal voltages directly at the device:

Communication		Current consumption	Terminal voltage
HART	Standard	4 mA	16 V to 36 V
		20 mA	7.5 V to 36 V
	Ex ia	4 mA	16 V to 30 V
		20 mA	7.5 V to 30 V
	Ex em Ex d	4 mA	16 V to 30 V
		20 mA	11 V to 30 V
	Ex ic	4 mA	16 V ... 32 V
		20 mA	7,5 V ... 32 V
Fixed current, adjustable e.g. for solar power operation (measured value transmitted via HART)	Standard	11 mA	10 V to 36 V
	Ex ia	11 mA	10 V to 30 V
Fixed current for HART Multidrop mode	Standard	4 mA[1)]	16 V to 36 V
	Ex ia	4 mA[1)]	16 V to 30 V

1) Startup current 11 mA.

HART residual ripple, 2-wire: $U_{ss} \leq 200$ mV

HART, 4-wire active

Version	Voltage	max. load
DC	10.5 to 32 V	600 Ω
AC, 50/60 Hz	90 to 253 V	600 Ω

Residual ripple HART, 4-wire, DC version: $U_{ss} \leq 2$ V, voltage incl. ripple within the permitted voltage (10.5 to 32 V)

PROFIBUS PA and FOUNDATION Fieldbus

Type	Terminal voltage
standard	9 V to 32 V
Ex ia (FISCO model)	9 V to 17.5 V
Ex ia (Entity concept)	9 V to 24 V

Supply voltage	9 V to 32 V [1)]
Lift-off voltage	9 V

1) There may be additional restrictions for devices with an explosion protection certificate. Refer to the notes in the appropriate Safety Instructions (XA).

Cable entry

- Cable gland: M20x1.5 (only cable entry for Ex d)
- Cable entry: G½ or ½NPT
- PROFIBUS PA M12 plug
- FOUNDATION Fieldbus 7/8" plug

Power consumption

Min. 60 mW, max. 900 mW.

Current consumption

HART

Communication	Output current	Current consumption	Power consumption
HART, 2-wire	3.6 to 22 mA[1)]	—	min. 60 mW, max. 900 mW
HART, 4-wire (90 to 250 V_{AC})	2.4 to 22 mA	~ 3 to 6 mA	~ 3,5 VA
HART, 4-wire (10.5 to 32 V_{DC})	2.4 to 22 mA	~ 100 mA	~ 1 W

1) For HART-Multidrop: start up current is 11 mA.

PROFIBUS PA

Max. 11 mA.

FOUNDATION Fieldbus

Nominal current	15 mA
Starting current	≤ 15 mA
Error current	0 mA
FISCO/FNICO conformal	Compliant
Polarity sensitive	No

FISCO

U_i	17,5 V
I_i	500 mA; with overvoltage protection 273 mA
P_i	5,5 W; with overvoltage protection 1,2 W
C_i	5 nF
L_i	0,01 mH

Overvoltage protection

If the measuring device is used for level measurement in flammable liquids which requires the use of overvoltage protection according to EN/IEC 60079-14 or EN/IEC 60060-1 (10 kA, pulse 8/20 µs), it has to be ensured that:

- the measuring device with integrated overvoltage protection with 600 V gas discharge tubes within the T12-enclosure is used, refer to "Ordering information", → 🖹 59
  or
- This protection is achieved by the use of other appropriate measures (external protection devices e.g. HAW562Z).

Performance characteristics

Reference operating conditions

- Temperature = +20 °C ±5 °C
- Pressure = 1013 mbar abs. ±20 mbar
- Humidity = 65 % ±20 %
- Reflection factor ≥ 0.8 (surface of the water for coax probe, metal plate for rod and rope probe with min. 1 m ∅)
- Flange for rod or rope probe ≥ 30 cm ∅
- Distance to obstructions ≥ 1 m
- For interface measurement:
  - Coax probe
  - DC of the lower medium = 80 (water)
  - DC of the upper medium = 2 (oil)

Maximum measured error

Typical statements for reference conditions:
DIN EN 61298-2, percentage of the span.

Output:	Digital	Analog
Sum of non-linearity, non-repeatability and hysteresis	**Level (electronic version level and interface measurement): measuring range FMP41C:** – up to 10 m: ±5 mm – > 10 m: ±0.05 % **Measuring range FMP45:** – up to 10 m: ±3 mm – > 10 m: ±0.03 % **FMP45 with coax probe:** – ±5 mm	±0.06 %
	Interface (only for electronic version "K" interface measurement): – Measuring range up to 10 m: ±10 mm If the thickness of the interface is <60 mm, the interface can no longer be differentiated from the overall level such that both output signals are identical.	
Offset / Zero	±4 mm	±0.03 %

If the reference conditions are not met, the offset/zero point arising from the mounting situation may be up to ±12 mm for rope and rod probes. This additional offset/zero point can be compensated for by entering a correction (function **"Offset" (057)**) during commissioning.

Differing from this, the following measuring error is present in the vicinity of the level (electronic version level and interface measurement):

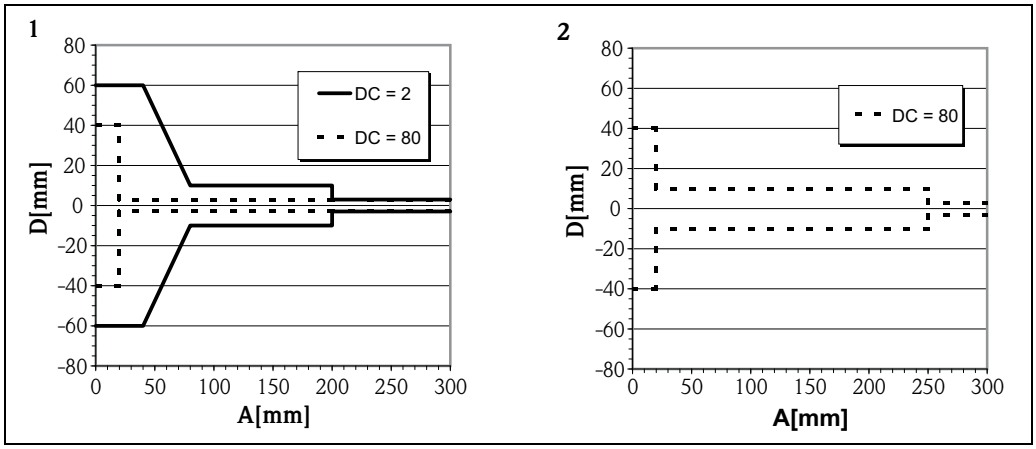

1 Rod and coax probe
2 Rope probe
A Distance from end of probe
D Sum of non-linearity, non-repeatability and hysteresis

Note!
If for rope probes the DC value is less than 7, then measurement is not possible in the area of the straining weight (0 to 250 mm from end of probe; lower blocking distance).

Differing from this, the following measuring error is present for thin interfaces (only for electronic version "K" interface measurement):

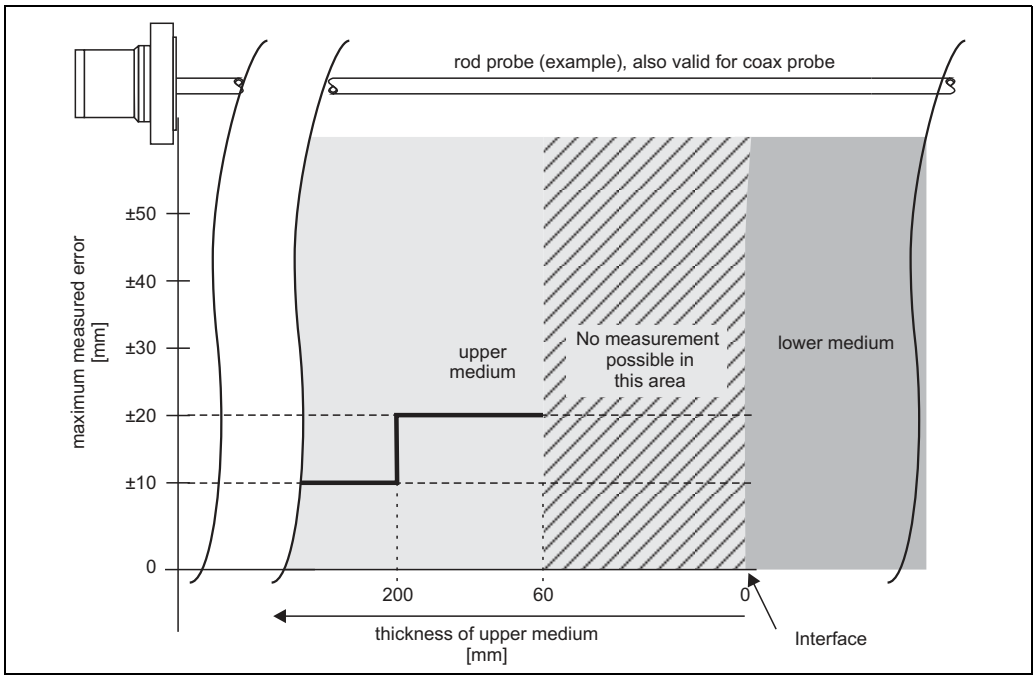

Resolution

- Digital: 1 mm
- Analog: 0.03 % of the measuring range

Reaction time

The reaction time depends on the configuration.

Shortest time:
- 2-wire electronics: 1 s
- 4-wire electronics: 0.7 s

Influence of ambient temperature

The measurements are carried out in accordance with EN 61298-3:
- digital output (HART, PROFIBUS PA, FOUNDATION Fieldbus):
  - Average T_K: 0.6 mm/10 K, max. ±3.5 mm over the entire temperature range -40 °C to +80 °C

2-wire:
- Current output (additional error, in reference to the span of 16 mA):
  - **Zero point (4 mA)**
    Average T_K: 0.032 %/10 K, max. 0.35 % over the entire temperature range -40 °C to +80 °C
  - **Span (20 mA)**
    Average T_K: 0.05 %/10 K, max. 0.5 % over the entire temperature range -40 °C to +80 °C

4-wire:
- Current output (additional error, in reference to the span of 16 mA):
  - **Zero point (4 mA)**
    Average T_K: 0.02 %/10 K, max. 0.29 % over the entire temperature range -40 °C to +80 °C
  - **Span (20 mA)**
    Average T_K: 0.06 %/10 K, max. 0.89 % over the entire temperature range -40 °C to +80 °C

Influence of gaslayer

High pressures reduce the propagation velocity of the measuring signals in the gas/vapor above the fluid. This effect depends on the kind of gas/ vapor and of its temperatur. This results in a measuring error that gets bigger as the distance increases between the device zero point (flange) and product surface. The following table illustrates this measured error for a few typical gases/vapors (with regard to the distance; a positive value means that too large a distance is being measured):

Gaslayer	Temperature		Pressure					
	°C	°F	1 bar (14.5 psi)	10 bar (145 psi)	50 bar (725 psi)	100 bar (1450 psi)	200 bar (2900 psi)	400 bar (5801 psi)
Air	20	68	0,00 %	0,22 %	1,2 %	2,4 %	4,9 %	9,5 %
	200	392	-0,01 %	0,13 %	0,74 %	1,5 %	3,0 %	6,0 %
	400	752	-0,02 %	0,08 %	0,52 %	1,1 %	2,1 %	4,2 %
Hydrogen	20	68	-0,01 %	0,10 %	0,61 %	1,2 %	2,5 %	4,9 %
	200	392	-0,02 %	0,05 %	0,37 %	0,76 %	1,6 %	3,1 %
	400	752	-0,02 %	0,03 %	0,25 %	0,53 %	1,1 %	2,2 %

Gaslayer	Temperature		Pressure				
	°C	°F	1 bar (14.5 psi)	10 bar (145 psi)	50 bar (725 psi)	100 bar (1450 psi)	200 bar (2900 psi)
Water (saturated steam)	100	212	0,20 %	-	-	-	-
	180	356	-	2,10 %	-	-	-
	263	507	-	-	8,6 %	-	-
	310	592	-	-	-	22,0 %	-
	364	691	-	-	-	-	58 %

Installing FMP45 with Gasphase Compensation (Coax only)

Application

For level measurement in steam application at high pressures and temperatures.
At high pressures and temperatures, the speed at which microwave signals are propagated in steam (polar media) is reduced above the liquid being measured. Automatic gas phase compensation allows this physical effect to be corrected from a measurement technology point of view. The accuracy of measurement is the higher the larger the reference Lref and the smaller the measuring range is:

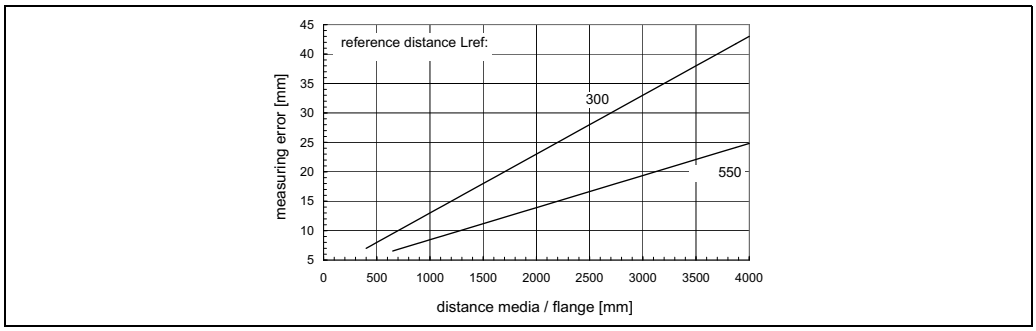

L00-FMP4xxxx-05-00-00-yy-003

If there are fast changes in pressure, there may be an additional error, since the measured reference distance is filtered with twice the time constant of the level measurement. In addition, condition of imbalance (e.g. due to heating) may cause density and pressure gradients within the medium and condensation of steam at the probe. As a result, the level readings at different locations inside the tank may very slightly.
Caused by this application influences the measuring error may be increased by a factor up to 2 to3.

Note!
Coax probes with reference reflection can be installed in any tank (free in the tank or into a bypass). Coax probes are completely mounted and adjusted ex work. After mounting they are ready for use, additional settings are not necessary.

Installation

This version of Levelflex M generates a reference reflection in the distance Lref from the flange (→ 🖹 59, "Ordering information" option U: 300 mm (11"); option V: 550 mm (21")). The reference reflection must be at least 150 mm above the highest level. By means of the shift of the reference reflection the actual propagation speed is measured and the level value will be automatically corrected.

Limitations for coax probes

Maximum probe length LN	LN ≤ 4000 mm
Minimum probe length LN	LN > Lref + 200 mm
Reference distance Lref	300 mm / 550 mm
Maximum level relative to sealing surface of flange:	Lref + 150 mm
Minimum DC-value of medium:	$D_K > 7$

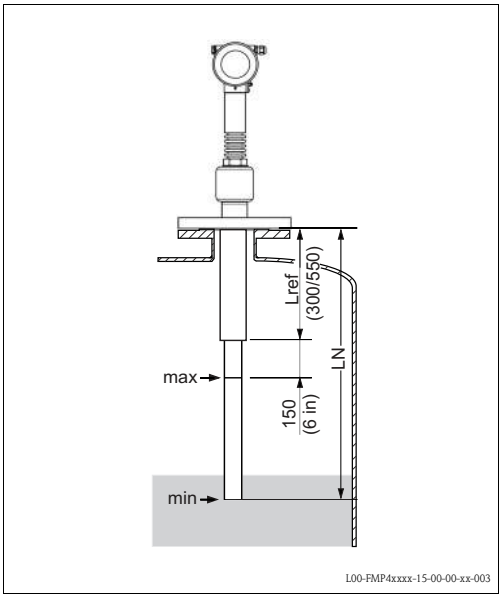

L00-FMP4xxxx-15-00-00-xx-003

Operating conditions: installation with level measurement

General information on level measurement

Probe selection (→ 🖹 6)

In normal cases, use rod probes. Rope probes are used for measuring ranges > 4 m and with restricted ceiling clearance which does not allow the installation of rigid probes.

Probe length

Note!
The measuring range is directly dependent on the probe length. It is better to order probes too long than too short since it is possible to shorten the probe if necessary. In the case of the rope probe for interface measurement, shortening is possible at the probe end weight. The probe end weight can be shortened up to a minimum length of 500 mm.

Mounting location

- Do not mount rod or rope probes in the filling curtain (2).
- Mount rod and rope probes away from the wall (B) at such a distance that, in the event of buildup on the wall, there is still a minimum distance of 100 mm between the probe and the build-up.
- Mount rod and rope probes as far away as possible from installed fittings. "Mapping" must be carried out during commissioning in the event of distances < 300 mm.
- Minimum distance of probe end to the container floor (C):
  – Rope probe: 150 mm
  – Rod probe: 50 mm
  – Coax probe (FMP45 only): 10 mm
- When installing outdoors, it is recommended that you use a protective cover (1).
  ("Accessories", → 🖹 66).

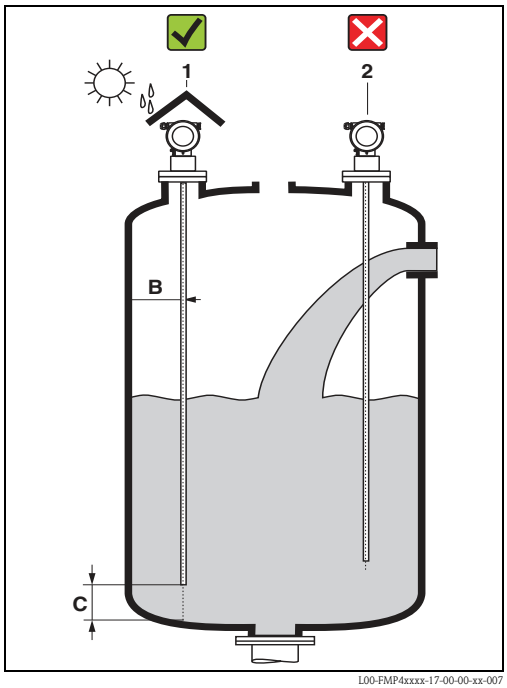

L00-FMP4xxxx-17-00-00-xx-007

Note!

Seal for devices with G1½" thread

Sealing form at the FMP45 corresponds the DIN 3852 Part 1, screwed end form A. The screwed end has an overall length of 45 mm (→ 🖹 41). In addition, suitable sealing rings as per DIN 7603 with dimensions 48x55 mm. Please use a sealing ring according to this standard in the form A, C or D and of a material that is resistant to the application.

Other installations

- Select the mounting location such that the distance to internals (5) (e.g. limit switch, struts) is > 300 mm over the entire length of the probe, also during operation.
- During operation, the probe must not touch any internals within the measuring range. If necessary, when using rope probes the probe end (4) may be fixed to secure it.

Optimization options

- Interference echo suppression: measurement can be optimized by electronically tuning out interference echoes.

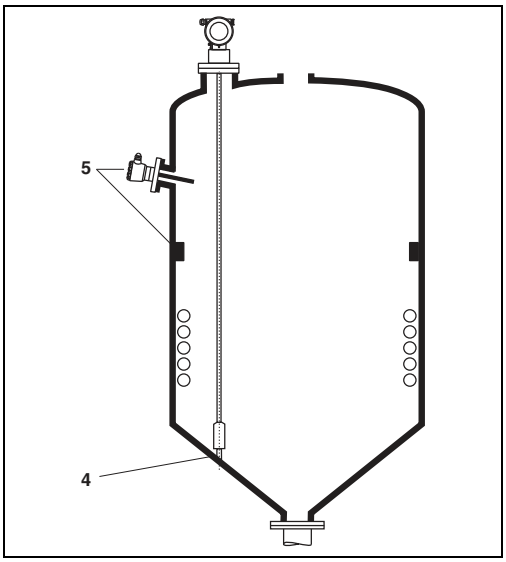

L00-FMP4xxxx-17-00-00-xx-008

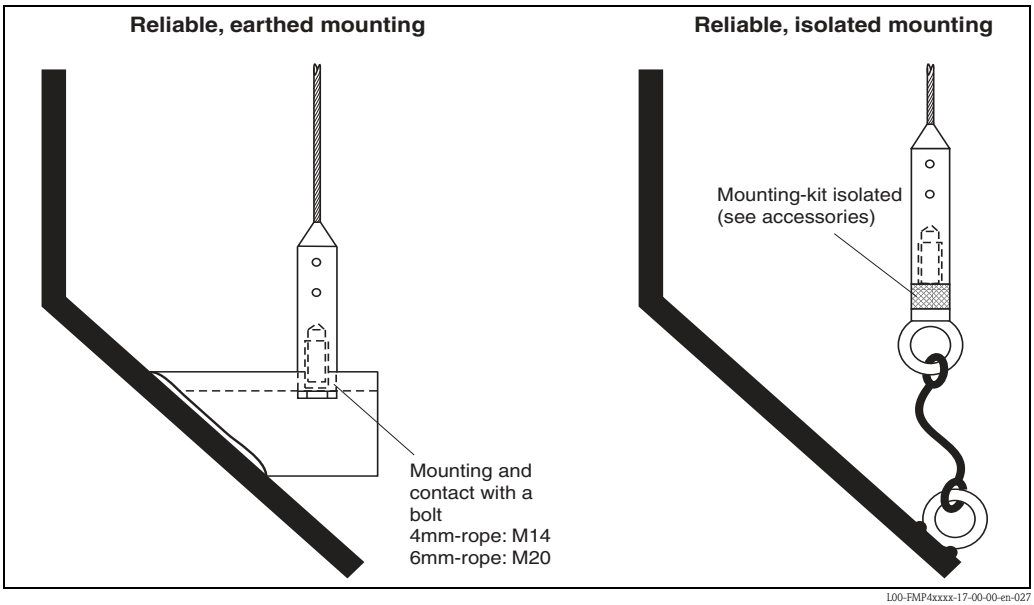

L00-FMP4xxxx-17-00-00-en-027

Separable probes

If there is little mounting space (distance to the ceiling), it is advisable to use separable rod probes (∅16 mm).

- max. probe length: 10 m (394 in)
- max. sideways capacity: 20 Nm
- probes are separable several times with the lengths:
  - 500 mm (19.68 in)
  - 1000 mm (39.37 in)
- torque: 15 Nm

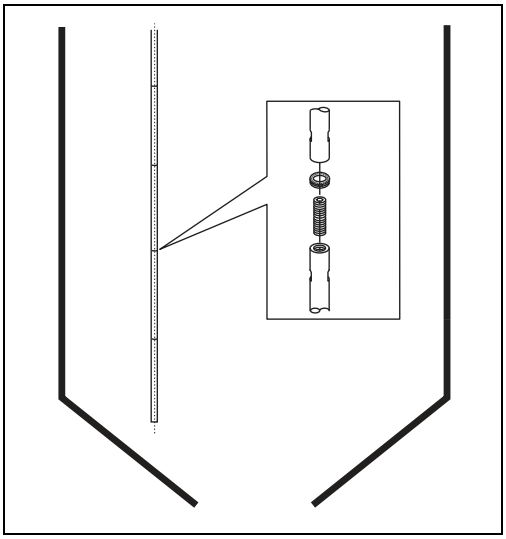

L00-FMP4xxxx-17-00-00-xx-015

Centering of probe end (FMP45 only)
If the centering disk is mounted at the end of the probe, it enables a reliable measuring.
See "Ordering information", → 📄 64.

- Centering disk for rod probes:
  – d = 45 mm (for DN50 (2"))
  – d = 75 mm (for DN80 (3") + DN100 (4"))

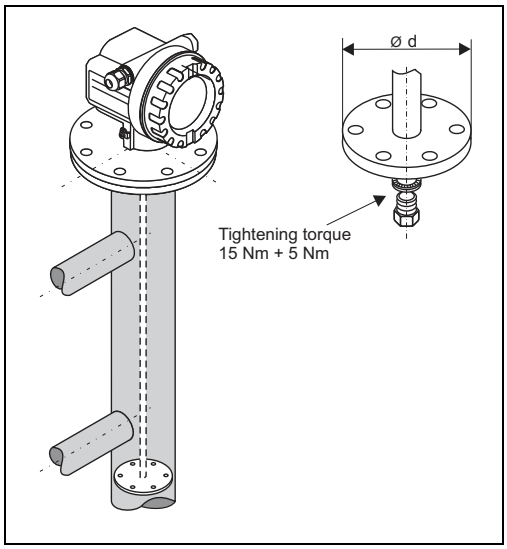

L00-FMP4xxxx-17-00-00-en-068

Type of probe installation

FMP41C
- When installing in plastic tanks, the nozzle must have at least DN50 (2"). The appropriate flange must be used as the process connection.
- For nozzles up to 450 mm high, select the length of the centering rod appropriate for the nozzle height when using rope probes.
- Observe installation instructions on, → 📄 24.
- Use spring washers (1) (see Figure below).
  Note!
  It is recommended to retighten the flange bolts periodically, depending on process temperature and pressure. Recommended torque: 60 to 100 Nm.
- After moing, the housing can be turned 350° in order to make it easier to access the display and the connection compartment.

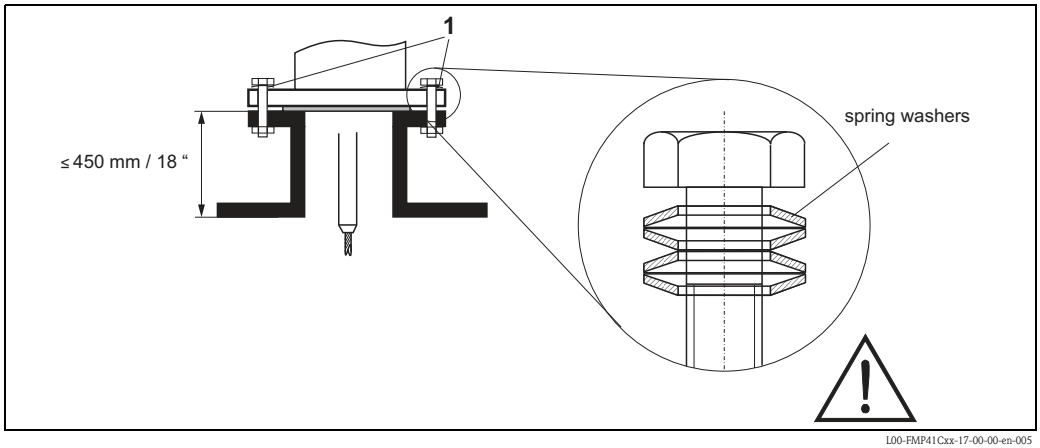

L00-FMP41Cxx-17-00-00-en-005

Note!
The PTFE plating of the FMP41C is used for sealing to the process. Usually no other sealing is necessary.

Supporting probes against warping

a. Rod probes: FMP41C and FMP45

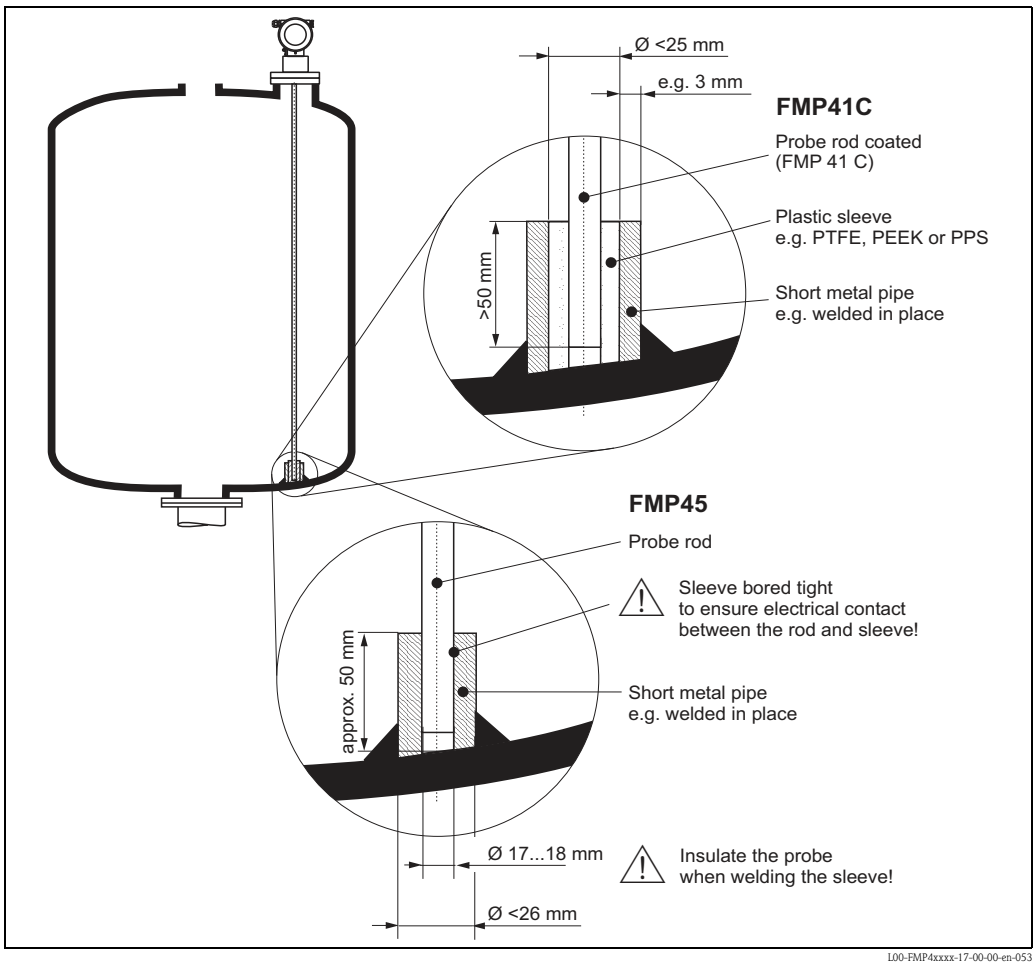

b. Coax probes: FMP45

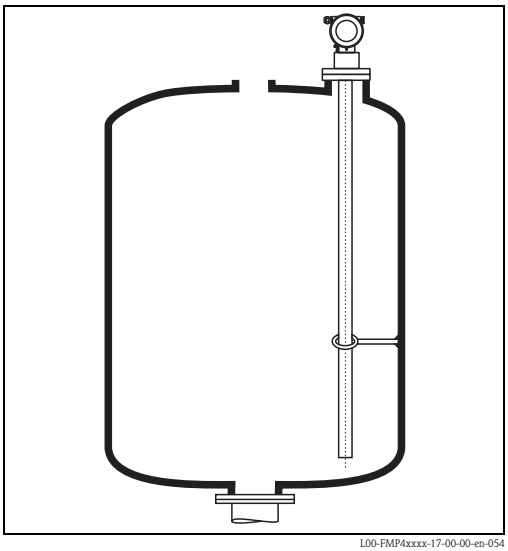

Installing FMP45 with heat insulation

- If process temperatures are high (≥ 200 °C), FMP45 must be included in normal tank insulation to prevent the electronics heating up as a result of heat radiation or convection.
- The insulation may not exceed beyond the points labeled "**MAX**" in the drawings.

Process connection with flange DN50 to DN100

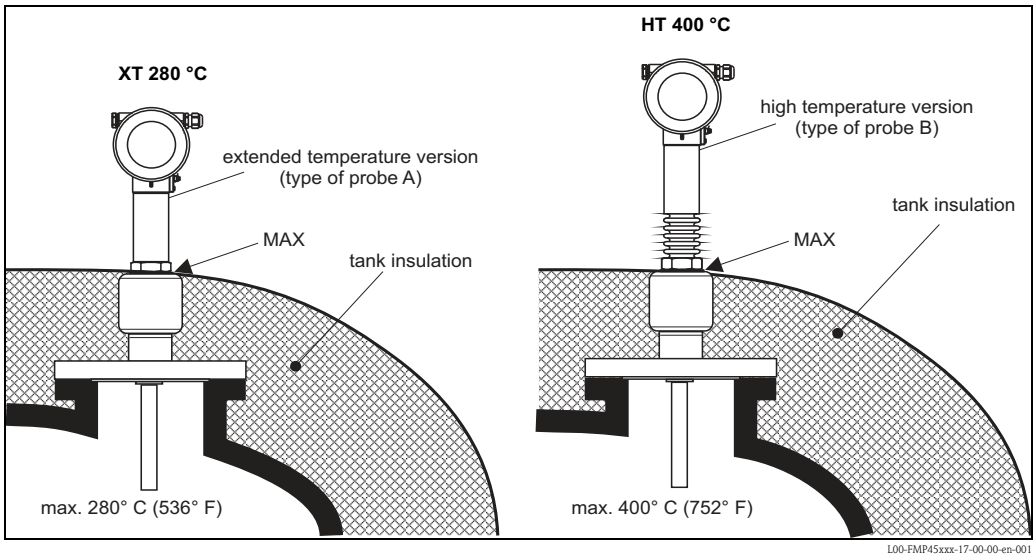

Process connection with adapter G1½" and 1½"NPT

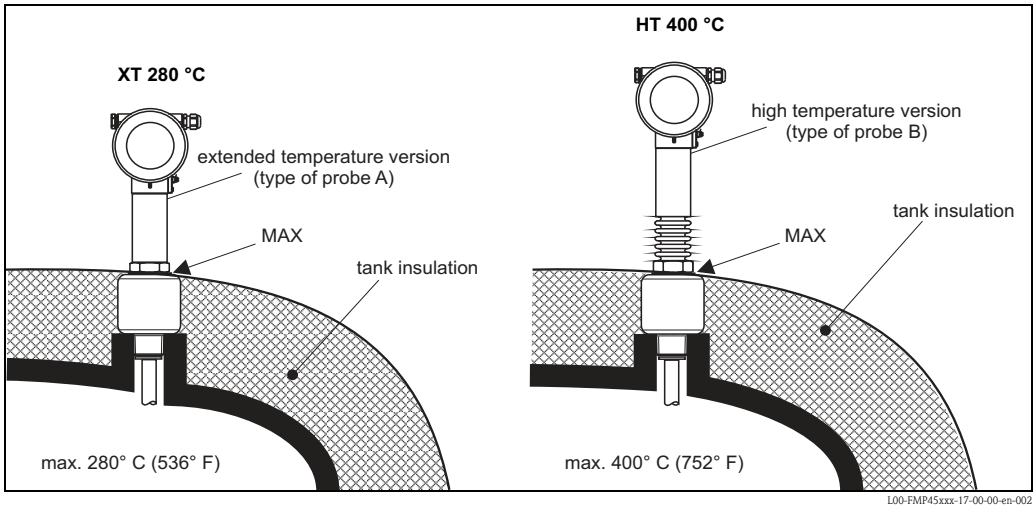

Note!
For saturated steam applications with FMP45 XT the process temperature should not exceed 200 °C (392 °F). For higher process temperatures use the HT version.

Special instructions

When installing in agitator tanks, observe lateral load-bearing capacity of rod probes (→ 🖹 6). Possibly check whether a non-contact process, Ultrasonic or Level-Radar would not be better suited, above all if the agitator generates large mechanical loads on the probe.

Installation in horizontal and upright cylindrical tanks

- Use a rod probe for measuring ranges up to 4 m. For anything over this, or if there is not enough overhead clearance, use a rope probe.
- Any distance from wall, as long as occasional contact is prevented.
- When using metal tanks, it is preferable to mount probes (1) eccentrically.

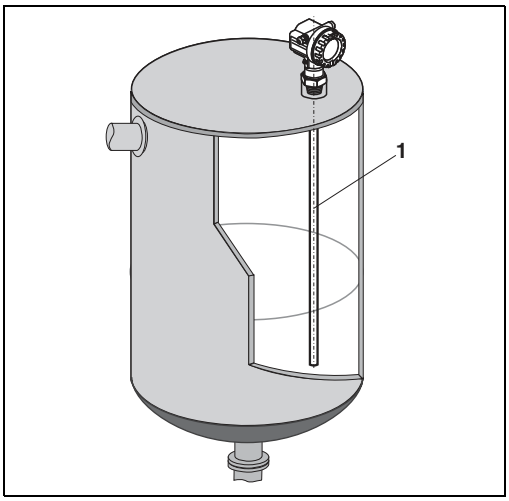

L00-FMP4xxxx-17-00-00-yy-049

Installation in stilling well or bypass

- Rod and rope probes can also be installed in pipes (stilling well, bypass).
- When installing in metal pipes up to DN150 (6"), the measuring sensitivity of the device increases such that liquids as of DC 1.4 can be measured.
- Welded joints that protrude up to approx. 5 mm inwards do not influence measurement.
- If a rod probe is used, the probe length must be 100 mm longer than the lower disposal.
- It must be ensured that the probe does not come into contact with the side wall. Where necessary, use a centering disk at the lower end of the probe (FMP45 only: "Type of probe:", → 🖹 62).

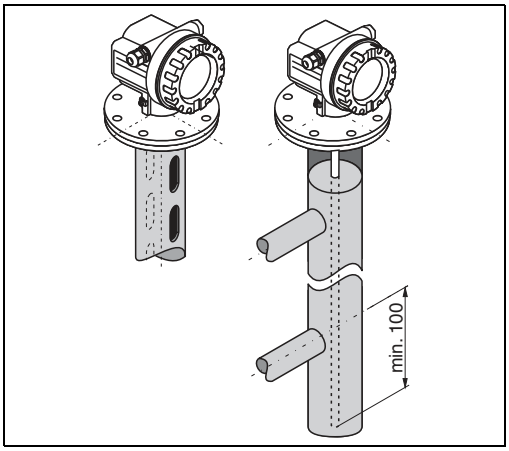

L00-FMP4xxxx-17-00-00-yy-023

Operating conditions: installation with interface measurement

General information on interface measurement

The Levelflex M with the "Interface" electronics version ("power supply, output" feature) it the ideal choice for measuring interfaces. However, it is also possible to measure interfaces with a special version of the standard device but the total level has to remain constant here. This version is available on request.

	"Interface" electronics version	Special version
	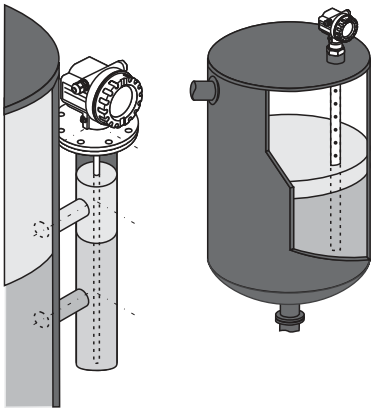 L00-FMP4xxxx-15-00-00-xx-001	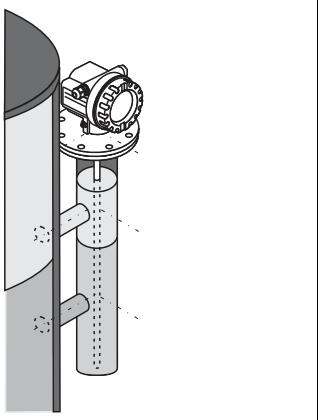 L00-FMP4xxxx-15-00-00-xx-002
Function	■ Measurement of variable interfaces and variable total levels. ■ Variable assignment of the output parameters. ■ Extended interface function	Measurement of variable interfaces with the prerequisite of a constant total level
Commissioning	Interface-specific menu guidance via onsite display or DTM	Special configuration, see modification information SV0107F/00/A2
Digital Communication	HART	HART, PROFIBUS PA, FOUNDATION Fieldbus
Ordering information	FMP41C - ## ### K ##### FMP45 - ### ### K #####	FMP41C/45 - ... D ####Y (PROFIBUS PA) FMP41C/45 - ... F ####Y (FOUNDATION Fieldbus) Y = Special version available on request

In addition, the following general conditions must be observed for interface measurement:
- The DC of the upper medium must be known and constant. The DC can be determined with the aid of the DC manual CP00019F/00/EN. In addition, whenever the interface thickness is existing and known, the DC can be calculated automatically via FieldCare.
- The DC of the upper medium may not be greater than 10.
- The DC difference between the upper medium and lower medium must be >10.
- The interface must have a minimum thickness of 60 mm (interface electronics version) or 100 mm (special version).
- Emulsion layers in the vicinity of the interface can severely dampen the signal. However, emulsion layers up to 50 mm are permitted.

Interface electronics version:

The device with the "Interface" electronics version makes it possible to measure the total level and the interface level simultaneously. The resulting process variables are output using the dynamic variables of the HART protocol. The process variables can be flexibly assigned to the dynamic variables (primary, secondary, tertiary, quaternary value).

Dynamic variables of the HART protocol	Possible process variable assignment	Comment
Primary Value	■ Interface ■ Total level ■ Thickness of the upper layer	The "primary value" is permanently assigned to the 4 to 20 mA current output
Secondary Value	■ Interface ■ Total level ■ Thickness of the upper layer	-
Tertiary Value	■ Interface ■ Total level ■ Thickness of the upper layer ■ Amplitude of the total level signal	-
Quaternary (4th) Value	Amplitude of the interface level signal	No variable assignment

Using the HART loop converter HMX50:

The dynamic variables of the HART protocol can be converted into individual 4 to 20 mA sections using the HART Loop Converter HMX50. The variables are assigned to the current output and the measuring ranges to the individual parameters in the HMX50.

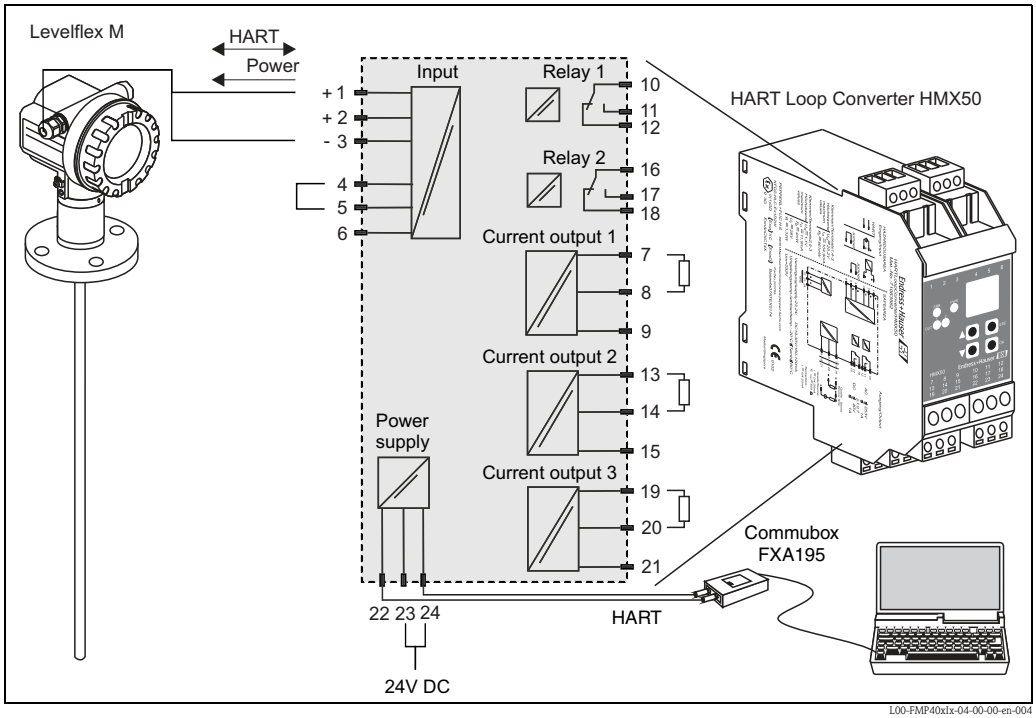

Connection diagram for HART loop converter HMX50
(example: passive 2-wire device and current outputs connected as power source)

The HART loop converter HMX50 can be acquired using the order number 71063562.
Additional documentation: TI00429F/00/EN and BA00371F/00/EN.

Probe selection (see also page 6)

- For interface measurement, ideally coax probes or rod probes are used in the bypass/stilling well.
- Coax probes are suited to liquids with viscosities of up to approx. 500 cst. Coax probes can measure most liquefied gases, as of a dielectric constant of 1.4. Moreover, installation conditions, such as nozzles, tank internal fittings etc., have no effect on the measurement when a coax probe is used. A coax probe offers maximum EMC safety when used in plastic tanks.
- Rod or rope probes for free installation in the tank available on request. Rope probes may not be used in the bypass/stilling well since the end weight always causes interference reflection which can be misinterpreted during interface measurement.

Special information on interface measurement

Installation in horizontal cylindrical, upright and underground tanks

- Use coax probes or rod probes in the bypass/stilling well. A separable probe is available as a special version for longer measuring ranges (only FMP45).
- Any distance from the wall is possible for coax probes or rod probes in the stilling well. In the case of rod probes, it must be ensured that the probe does not come into contact with the wall.

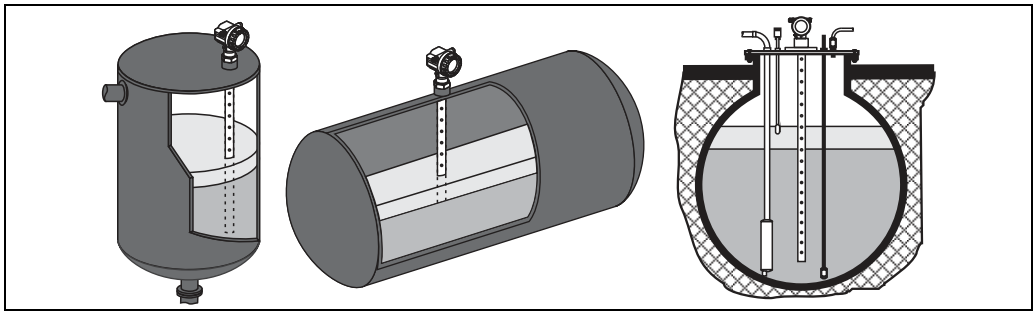

L00-FMP4xIxx-17-00-00-xx-002

Installation in stilling well or bypass

- A rod probe can be used for pipe diameters bigger than 40 mm.
- Rod probe installation can take place up to a diameter size of 100 mm. In the event of larger diameters, a coax probe is recommended.
- Welded joints that protrude up to approx. 5 mm inwards do not influence measurement.
- The pipe may not exhibit any steps in diameter.
- If a rod probe is used, the probe length must be 100 mm longer than the lower disposal.
- In the case of rod probes, it must be ensured that the probe does not come into contact with the wall. If necessary, use a centering disk at the end of the probe.

Note!
A plastic centering disk has to be used for interface measurement ("Accessories", → 🖹 69).

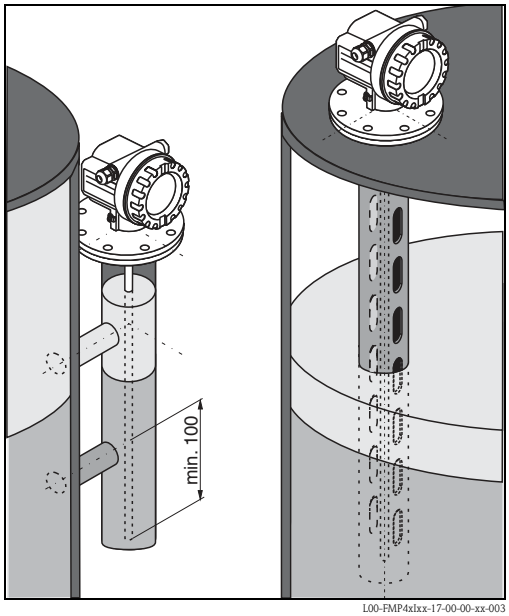

L00-FMP4xIxx-17-00-00-xx-003

Operating conditions: general installation instructions for special installation situations

Installation at an angle

- For mechanical reasons, the probe should be installed as vertically as possible.
- With inclined installations the probe length has to be adjusted in dependence to the installation angle.
  - up to 1 m = 30°
  - up to 2 m = 10°
  - up to 4 m = 5°.

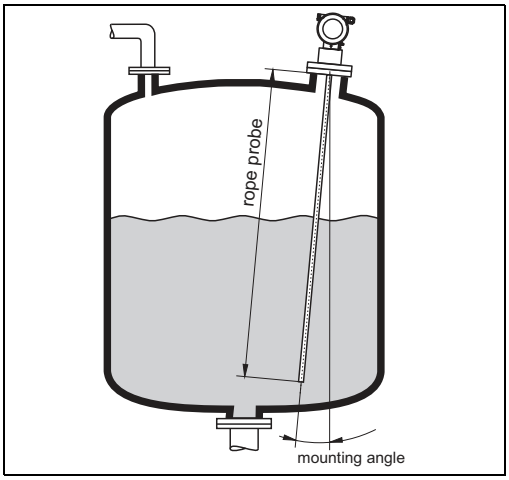

L00-FMP4xlxx-17-00-00-en-048

Replacing a displacer system in an existing displacer chamber

The Levelflex M is a perfect replacement for a conventional displacer system in an existing displacer chamber. In addition to the DIN and ANSI flanges, which are available as standard, Endress+Hauser also offers flanges that suit Fischer and Masoneilan displacer chamber (special product) for this purpose. Thanks to menu-guided local operation, commissioning the Levelflex M only takes a few minutes. Replacement is also possible when partially filled, and wet calibration is not required.

Your benefits:
- No moving parts, thus zero-maintenance operation.
- Not sensitive to process influences such as temperature, density, turbulence and vibrations.
- The rod probes can be shortened or replaced easily. In this way, the probe can be easily adjusted on site.

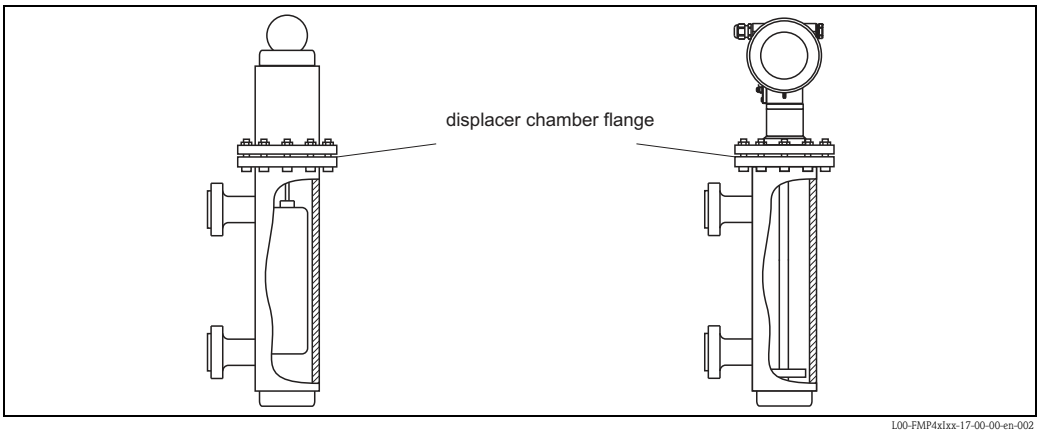

L00-FMP4xlxx-17-00-00-en-002

Planning instructions:
- In normal cases, use a rod probe. When installing into a metallic displacer chamber up to 150 mm, you have all the advantages of a coax probe ("Probe selection", → 📄 6).
- It must be ensured that the probe does not come into contact with the side wall. Where necessary, use a centering disk at the lower end of the probe ("Type of probe:", → 📄 62).
- A centering disk must be adapted as accurately as possible to the internal diameter of the displacer chamber to also ensure perfect operation in the area of the probe end.

Additional information on interface measurement

- The pipe may not exhibit any steps in diameter. Use the coax probe where necessary.
- In the case of rod probes, it must be ensured that the probe does not come into contact with the wall. If necessary, use a centering disk at the end of the probe.

Note!
A plastic centering disk has to be used for interface measurement ("Accessories", → 📄 69).

Installation for difficult-to-access process connections

Installation with remote electronics

- Wall and pipe bracket is contained in the scope of delivery and is already mounted.
- When installing, follow the instructions, → 24.
- Mount housing on a wall or pipe (vertically or horizontally) as shown in the diagram.

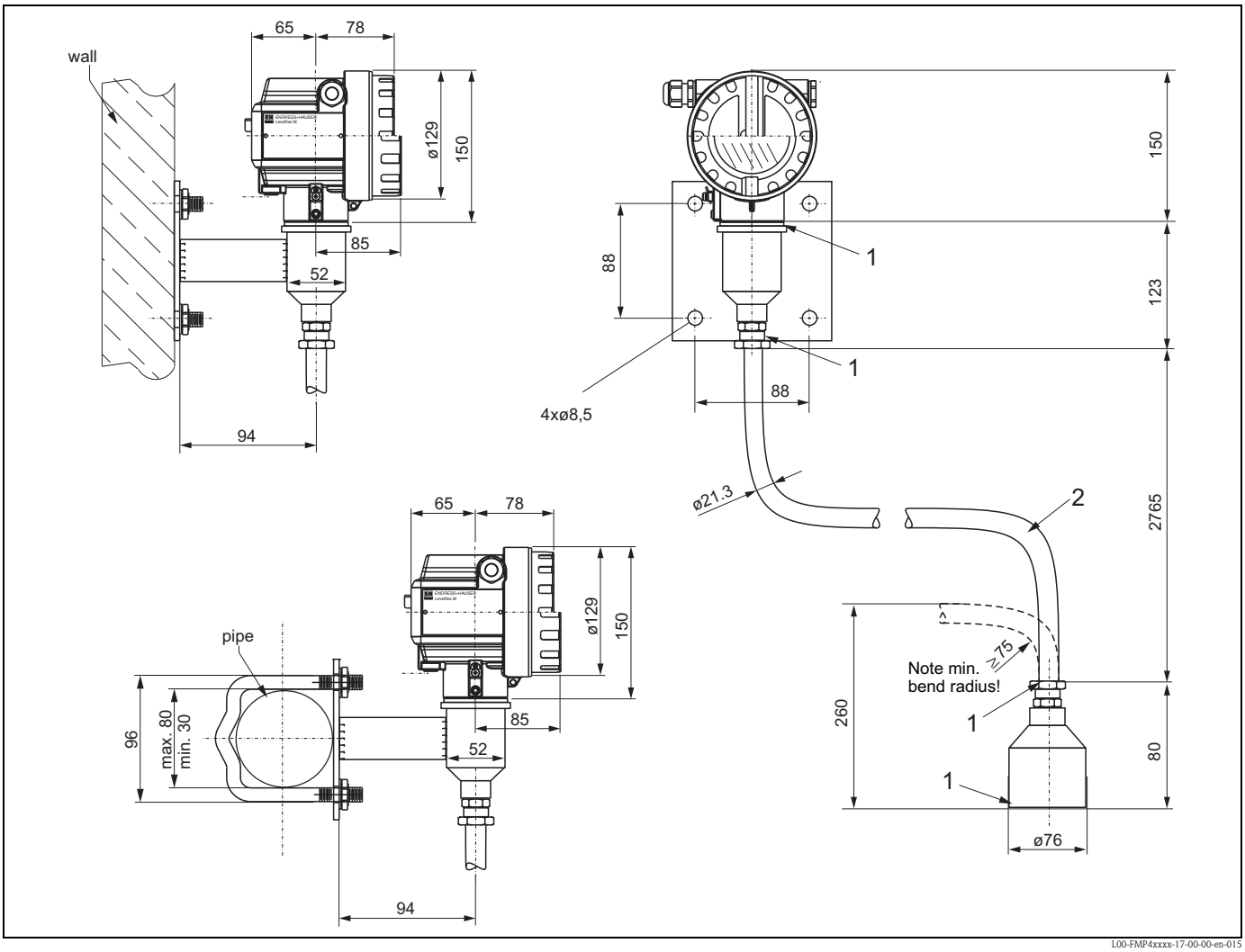

Note!
The protective hose cannot be disassembled at these points (1).

The ambient temperature for the connecting pipe (2) between the probe and the electronics must not be greater than 105 °C.
FMP45: For the remote electronics, temperatures up to 280 °C or 400 °C (depending on the device version) are admissible at the process connection. The version with remote electronics consists of the probe, a connecting cable and the housing. If they are ordered as a complete unit they are assembled when delivered.

Operating conditions: Environment

Ambient temperature range

Ambient temperature at the electronics: –40 °C to +80 °C. The function of the LCD display is restricted at T_A < –20 °C and T_A > +60 °C. A weather protection cover should be used for outdoor operation if the device is exposed to direct sunlight.

Ambient temperature limits

FMP41C

If the temperature (T_2) at the process connection is above 80 °C, the permitted ambient temperature (T_1) decreases as per the following diagram (temperature derating):

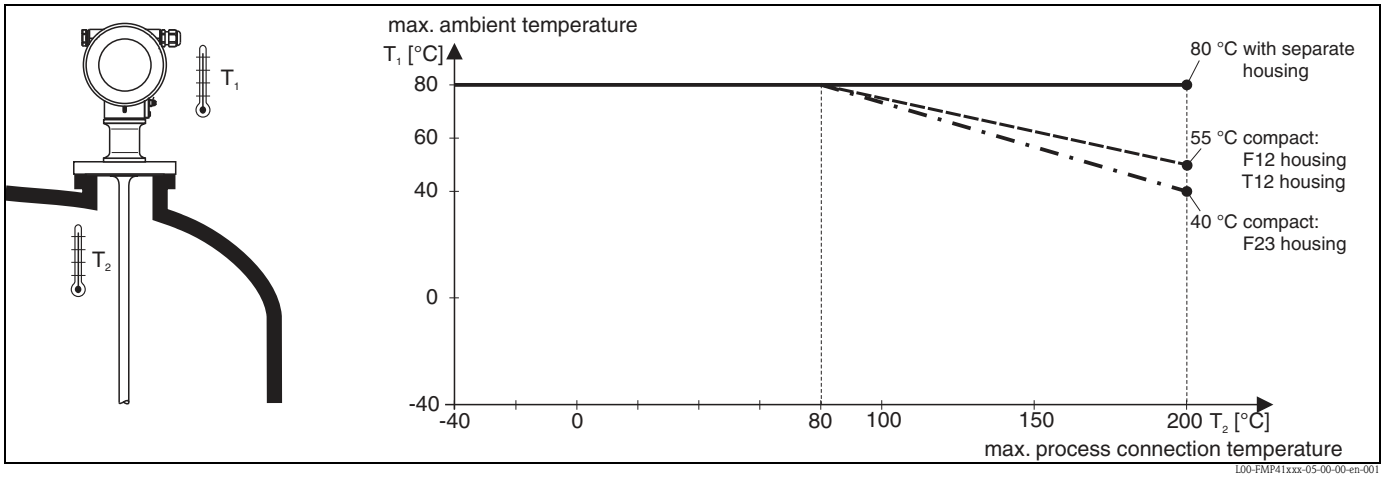

FMP45 (HT 400 °C)

If the temperature (T_2) at the process connection is below –40 °C or above +80 °C, the permitted ambient temperature (T_1) is limited as shown in the following diagram (temperature derating):

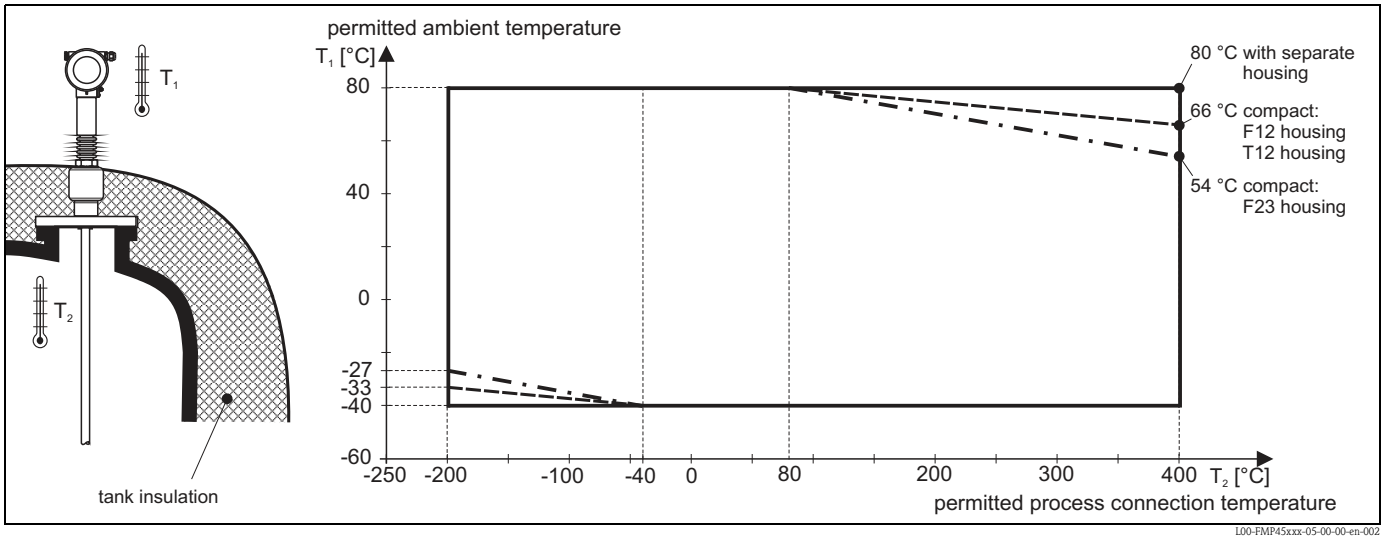

FMP45 (XT 280 °C)

If the temperature (T_2) at the process connection is below -40 °C or above +80 °C, the permitted ambient temperature (T_1) is limited as shown in the following diagram (temperature derating):

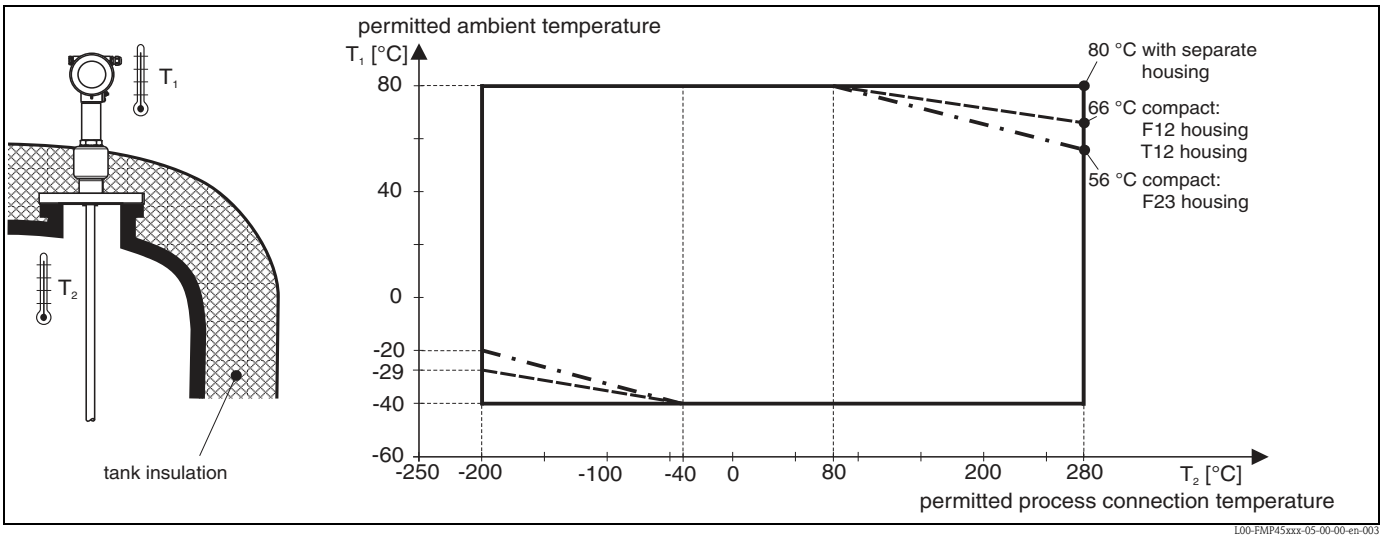

Note! For saturated steam applications with FMP45 XT the process temperature should not exceed 200 °C (392 °F). For higher process temperatures use the HT version.

Storage temperature

-40 °C to +80 °C

Climate class

DIN EN 60068-2-38 (test Z/AD)

Degree of protection

- With closed housing tested according to:
  - IP68, NEMA6P (24 h at 1.83 m under water surface)
  - IP66, NEMA4X
- With open housing: IP20, NEMA1 (also ingress protection of the display)

Caution!
Degree of protection IP68 NEMA6P applies for M12 PROFIBUS PA plugs only when the PROFIBUS cable is plugged in.

Vibration resistance

DIN EN 60068-2-64 / IEC 68-2-64: 20 to 2000 Hz, 1 $(m/s^2)^2/Hz$

Cleaning the probe

Depending on the application, contamination or build-up can accumulate on the probe. A thin, even layer only influences measurements slightly. Thick layers can dampen the signal and then reduce the measuring range. Severe, uneven build-up, adhesion e.g. through ctystallization, can lead to incorrect measurement. In this case, we recommend that you use a non-contact measuring principle, or check the probe regularly for soiling.

Electromagnetic compatibility (EMC)

Electromagnetic compatibility to EN 61326 and NAMUR Recommendation EMC (NE21). Details are provided in the Declaration of Conformity. A standard installation cable is sufficient if only the analog signal is used. Use a shielded cable when working with a superimposed communications signal (HART).

When installing the probes in metal and concrete tanks and when using a coax probe:
- Interference emission to EN 61326 - x series, electrical equipment Class B.
- Interference immunity to EN 61326 - x series, requirements for industrial areas and NAMUR Recommendation NE21 (EMC)

The measured value can be affected by strong electromagnetic fields when installing rod and rope probes without a shielding/metallic wall, e.g. plastic, and in wooden silos.
- Interference emission to EN 61326 - x series, electrical equipment Class A.
- Interference Immunity: the measured value can be affected by strong electromagnetic fields.

Operating conditions: Process

Process temperature range

The maximum permitted temperature at the process connection (see Figure for measuring point) is determined by the process connection ordered:

FMP41C

Min. temperature	Max. temperature	
-40 °C (-40 °F)	+200 °C (392 °F)	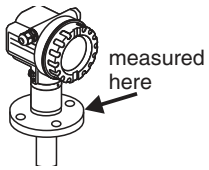

High process temperatures (> 150 °C (302 °F)) may possibly accelerate diffusion of the process medium through the probe coating, which may reduce the operating time.
Recommendation: Use FMP45

For FMP41C with Endress+Hauser universal adapter: 0 °C to +150 °C (32 °F to +302 °F).

FMP45

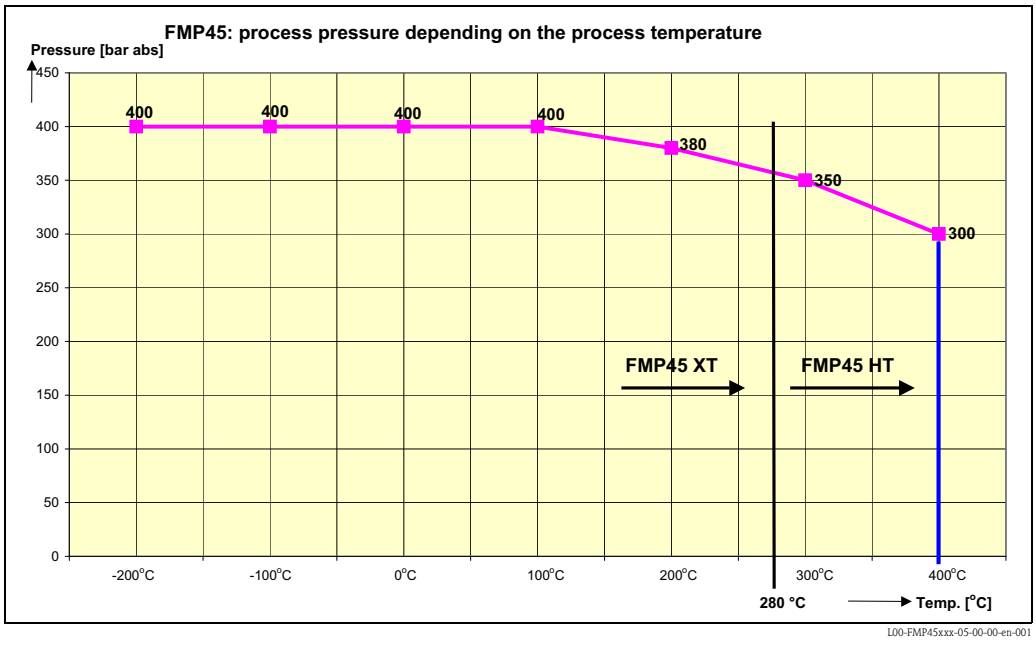

Note!
For saturated steam applications with FMP45 XT the process temperature should not exceed 200 °C (392 °F). For higher process temperatures use the HT version.

Process pressure limits

The specified range may be reduced by the selected process connection. The pressure rating (PN) specified on the nameplates / flanges refers to a reference temperature of 20 °C, for ASME flanges 100 °F. Observe pressure-temperature dependency.

Please refer to the following standards for the pressure values permitted for higher temperatures:
- EN 1092-1: 2001 Tab. 18
  With regard to their temperature stability properties, the materials 1.4404 and 1.4435 are grouped under 13E0 in EN 1092-1 Tab. 18. The chemical composition of the two materials can be identical.
- ASME B 16.5a - 1998 Tab. 2-2.2 F316
- ASME B 16.5a - 1998 Tab. 2.3.8 N10276
- JIS B 2220

FMP41C

Depends on process connection, -1 to +40 bar (over the entire temperature range).
For FMP41C with Endress+Hauser universal adapter: max. 6 bar (87 psi).
For FMP41C with Clamp:

Version		Pressure (bar/psi)
TCK	Tri-Clamp ISO2852 1-1/2", PTFE >316L	16 (232)
TDK	Tri-Clamp ISO2852 2", PTFE >316L	16 (232)
TFK	Tri-Clamp ISO2852 3", PTFE >316L	10 (145)
TJK	Tri-Clamp ISO2852 1-1/2", PTFE >316L, 3A EHEDG	16 (232)
TLK	Tri-Clamp ISO2852 2", PTFE >316L, 3A EHEDG	16 (232)
TNK	Tri-Clamp ISO2852 3", PTFE >316L, 3A EHEDG	10 (145)

FMP45

See pressure/temperature diagram in chapter "Operating conditions: Process".

Dielectric constant

FMP41C

- Rod and rope probe: $\varepsilon r \geq 1.6$
- When installing in metallic pipes DN ≤ 150 mm: $\varepsilon r \geq 1.4$

FMP45

- Rod and rope probe: $\varepsilon r \geq 1.6$, when installing in pipes DN ≤ 150 mm: $\varepsilon r \geq 1.4$
- Coax probes: $\varepsilon r \geq 1.4$

Mechanical construction

Design, dimensions

Housing dimensions

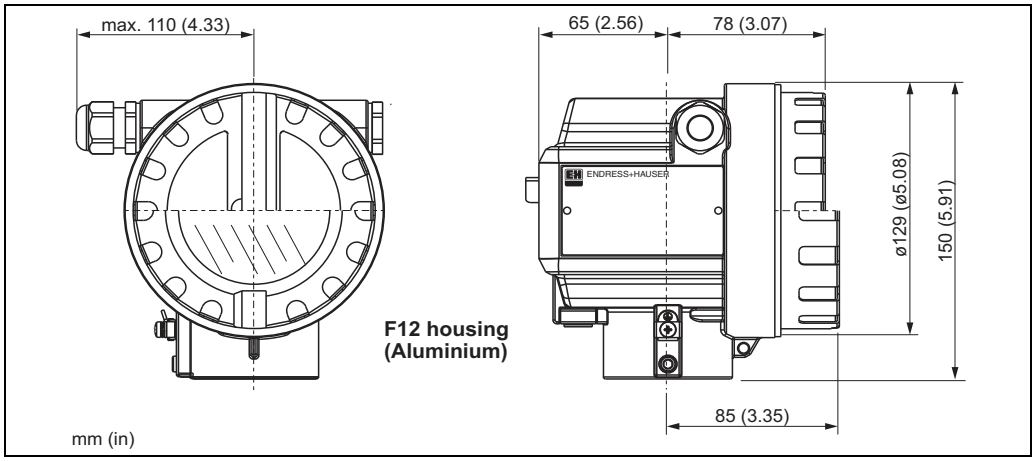

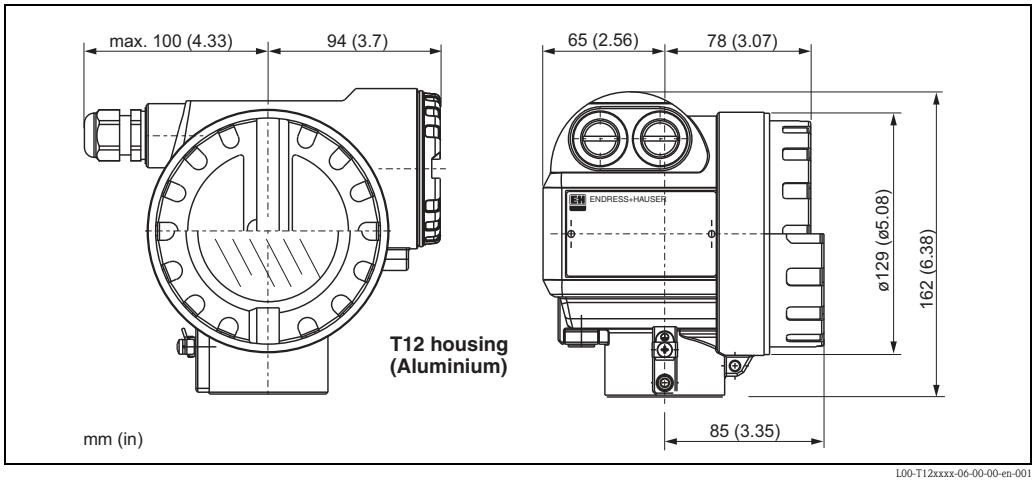

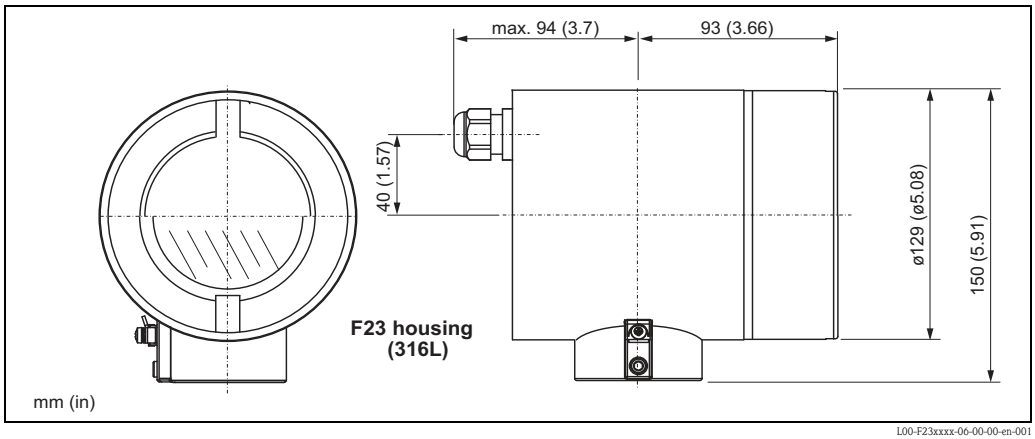

Levelflex M FMP41C - Process connection, type of probe

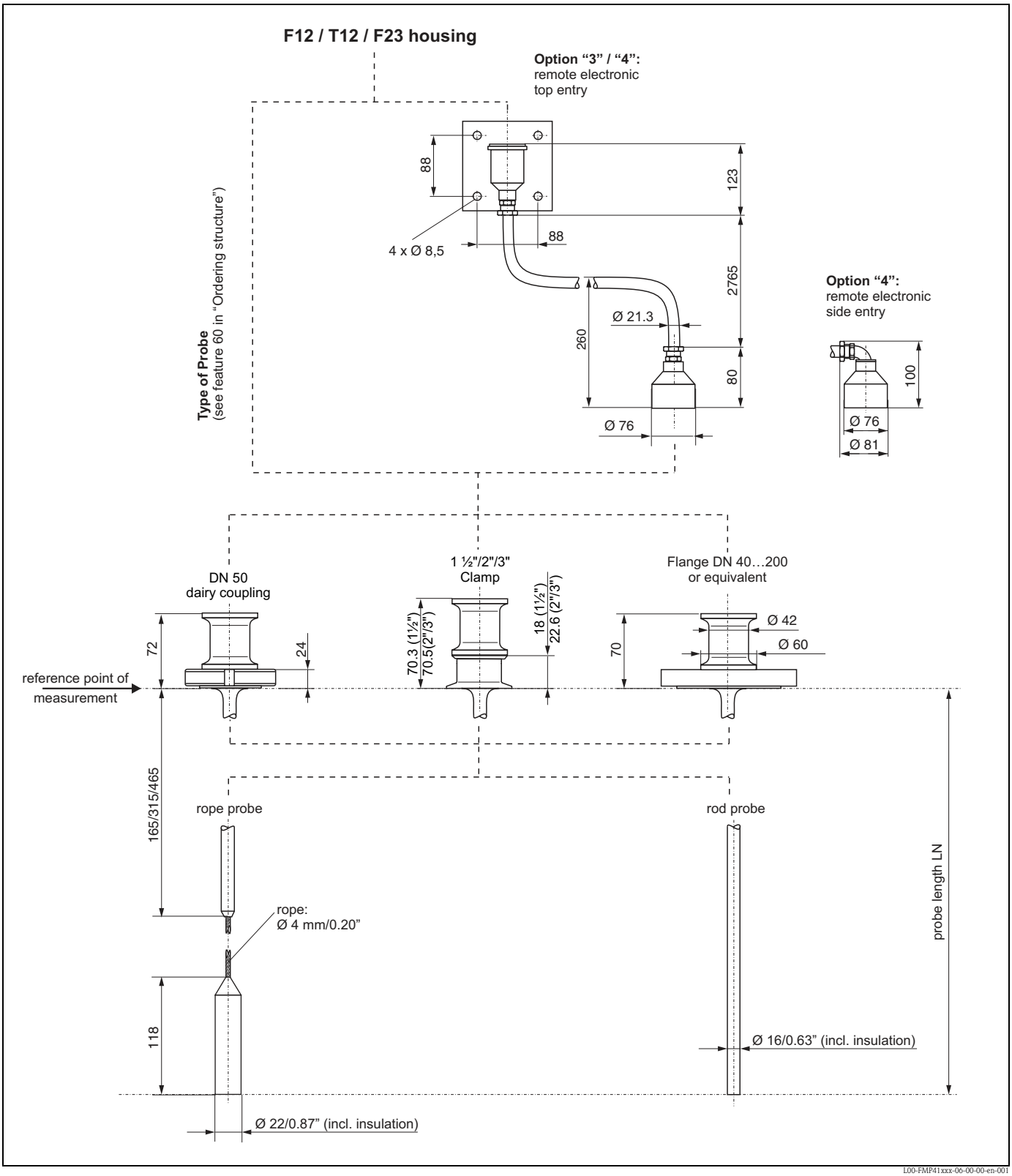

Levelflex M FMP45 - Process connection, type of probe

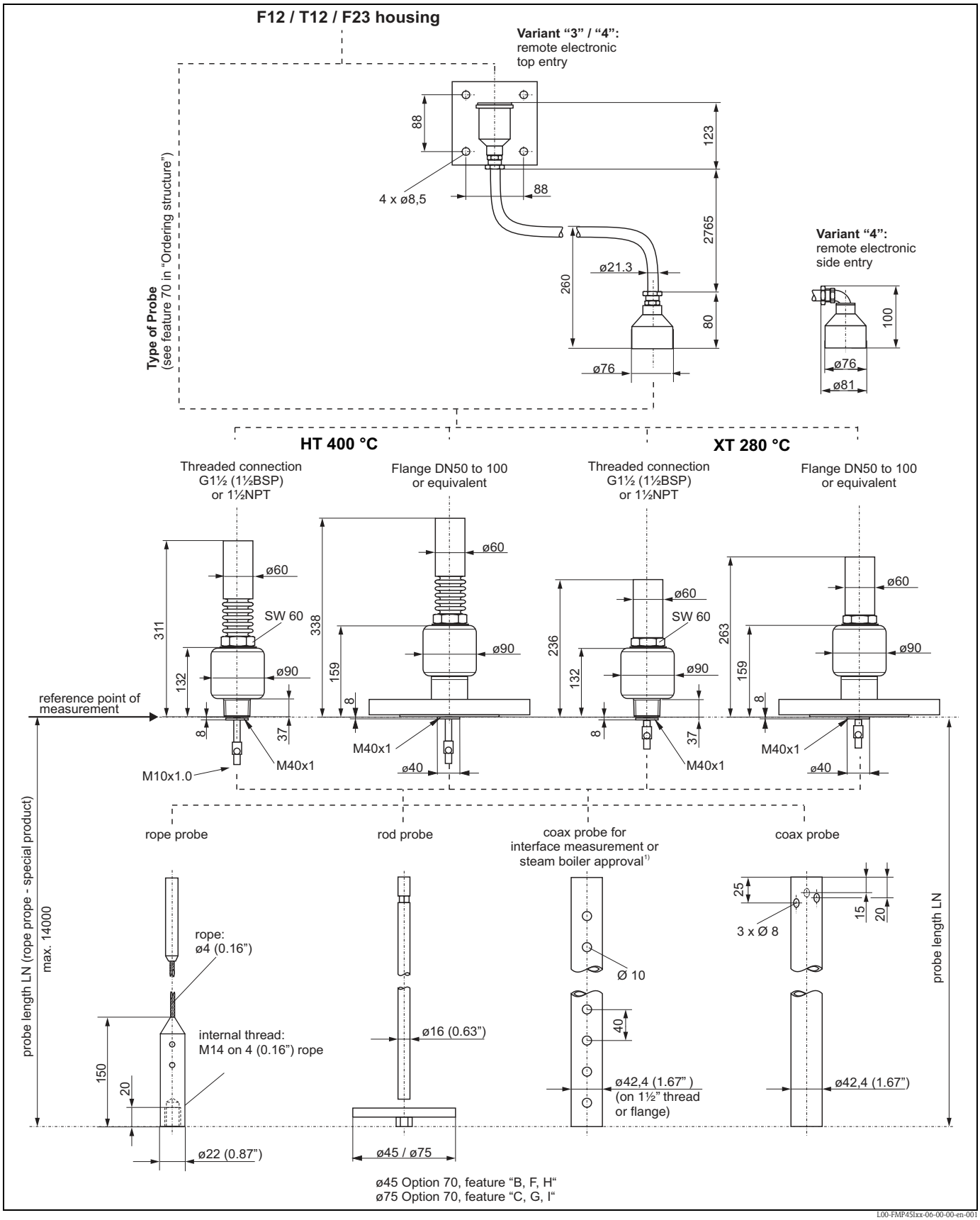

1) see SD00288F/00/EN "Steam boiler approval".

General information on flanges

The surface roughness of the surface in contact with the medium, including the sealing surface of the glanges (all standards) made of Hastelloy C, Monel or Tantas, is Ra 3.2. Lower roughness levels are available on request.

Tolerance of probe length

	Rod probes/coax probes				Rope probes			
Over	-	1 m	3 m	6 m	-	1 m	3 m	6 m
Up to	1 m	3 m	6 m	-	1 m	3 m	6 m	-
Admissible tolerance (mm)	- 5	- 10	- 20	- 30	- 10	- 20	- 30	- 40

Weight

Levelflex M FMP41C	**Rod probe**	**Rope probe**
Weight with F12 or T12 housing	approx. 3.5 kg + approx. 1.1 kg/m Probe length +weight of flange	approx. 3.5 kg + approx. 0.5 kg/m Probe length + weight of flange
Weight with F23 housing	approx. 6.8 kg + approx. 1.1 kg/m Probe length + weight of flange	approx. 6.8 kg + approx. 0.5 kg/m Probe length + weight of flange

Levelflex M FMP45	**XT version (max. 280 °C)**		
	Rod probe	**Rope probe**	**Coax probe**
Weight with F12 or T12 housing	approx. 8.5 kg + Approx. 1.6 kg/m Probe length + weight of flange	approx. 8.5 kg + Approx. 0.1 kg/m Probe length + weight of flange	approx. 8.5 kg + Approx. 3.5 kg/m Probe length + weight of flange
Weight with F23 housing	approx. 12 kg + Approx. 1.6 kg/m Probe length + weight of flange	approx. 12 kg + Approx. 0.1 kg/m Probe length + weight of flange	approx. 12 kg + Approx. 3.5 kg/m Probe length + weight of flange

Levelflex M FMP45	**HT version (max. 400 °C)**		
	Rod probe	**Rope probe**	**Coax probe**
Weight with F12 or T12 housing	approx. 9.5 kg + Approx. 1.6 kg/m Probe length + weight of flange	approx. 9.5 kg + Approx. 0.1 kg/m Probe length + weight of flange	approx. 9.5 kg + Approx. 3.5 kg/m Probe length + weight of flange
Weight with F23 housing	approx. 13 kg + Approx. 1.6 kg/m Probe length + weight of flange	approx. 13 kg + Approx. 0.1 kg/m Probe length + weight of flange	approx. 13 kg + Approx. 3.5 kg/m Probe length + weight of flange

Material (not in contact with process)

T12 and F12 housing (seawater-resistant*, powder-coated)

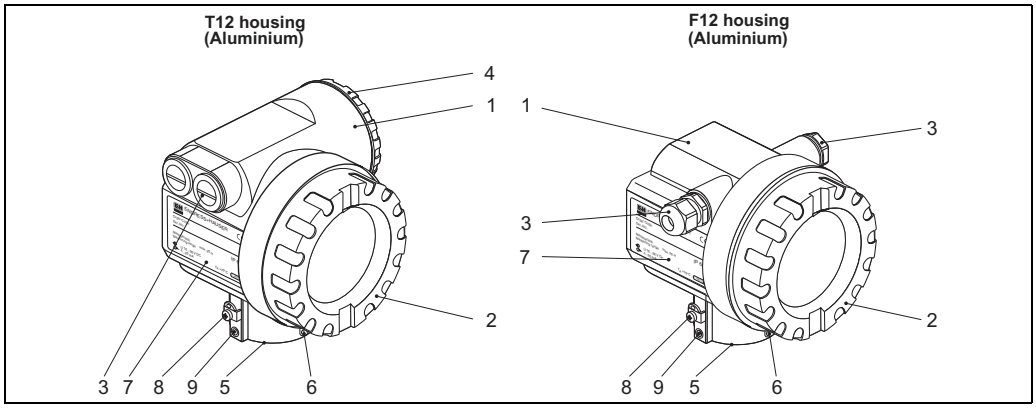

Pos.	Part	Material	
1	T12 and F12 housing	AlSi10Mg	
2	Cover (Display)	AlSi10Mg	
	Sealing	Fa. SHS: EPDM 70pW FKN	
	Window	ESG-K-Glass (Toughened safety glass)	
	Sealing of the glass	Silicone sealing compound Gomastit 402	
3	Sealing	Fa. SHS: EPDM 70 pW FKN	Trelleborg: EPDM E7502
	Cable gland	Polyamid (PA), CuZn nickel-plated	
	Plug	PBT-GF30	1.0718 galvanized
		PE	3.1655
	Adapter	316L (1.4435)	AlMgSiPb (anodized)
4	Cover (Connection compartment)	AlSi10Mg	
	Sealing	Fa. SHS: EPDM 70pW FKN	Trelleborg: EPDM E7502/E7515
	Clamp	Screws: A4; Clamp: Ms nickel-plated; Spring washer: A4	
5	Sealing ring	Fa. SHS: EPDM 70pW FKN	Trelleborg: EPDM E7502/E7515
6	Tag*	304 (1.4301)	
	Rope	316 (1.4401)	
	Crimp sleeve	Aluminium	
7	Nameplate*	304 (1.4301)	
	Groove pin*	A2	
8	Ground terminal*	Screws: A2; Spring washer: A4; Clamp: 304 (1.4301); Holder: 301 (1.4310)	
9	Screws*	A2-70	

* Seawater-resistant on request (complete in 316L (1.4404)).

F23 housing (seawater-resistant*, corrosion-resistant)

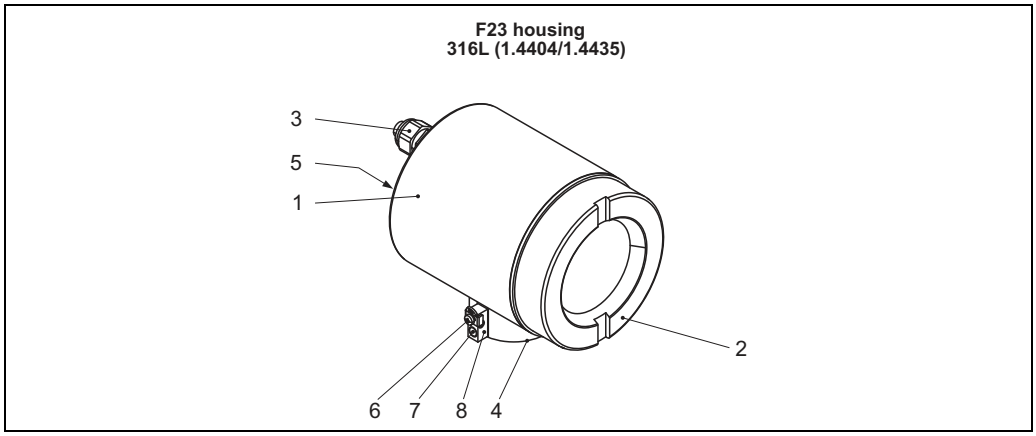

Pos.	Part	Material	
1	F23 housing	Housing body: 316L (1.4404); Sensor neck: 316L (1.4435); Earth connection block: 316L (1.4435)	
2	Cover	316L (1.4404)	
	Sealing	Fa. SHS: EPDM 70pW FKN	
	Window	ESG-K-Glass (Toughened safety glass)	
	Sealing of the glass	Silicone sealing compound Gomastit 402	
3	Sealing	Fa. SHS: EPDM 70pW FKN	Trelleborg: EPDM E7502
	Cable gland	Polyamid (PA), CuZn nickel-plated	
	Plug	PBT-GF30	1.0718 galvanized
		PE	3.1655
	Adapter	316L (1.4435)	
4	Sealing ring	Fa. SHS: EPDM 70pW FKN	Trelleborg: EPDM E7502
5	Nameplate*	304 (1.4301)	
	Groove pin*	A2	
6	Grounding terminal*	Screws: A2; Spring washer: A4; Clamp: 304 (1.4301); Holder: 301 (1.4310)	
7	Screw*	A2-70	
8	Tag*	304 (1.4301)	
	Rope	316 (1.4401)	
	Crimp sleeve	Aluminium	

* Seawater-resistant on request (complete in 316L (1.4404)).

Wall and pipe bracket

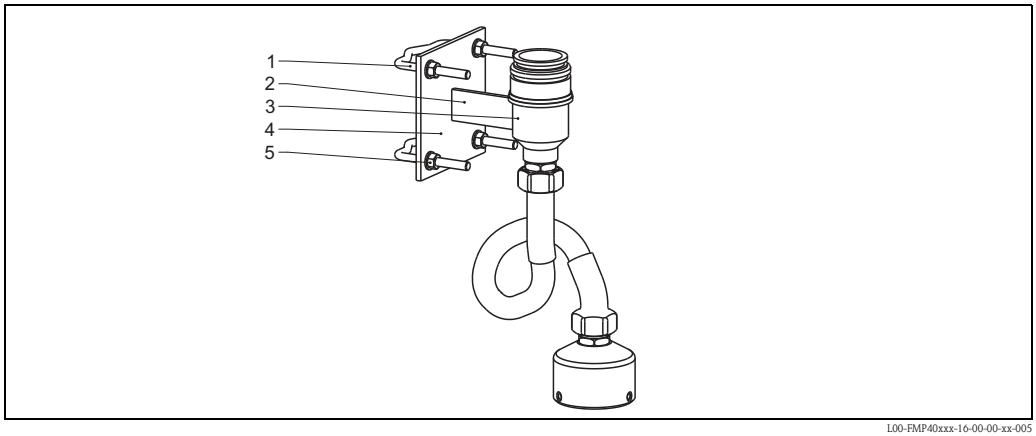

L00-FMP40xxx-16-00-00-xx-005

Pos.	Part	Material
1	Bracket	304 (1.4301)
2	Bar	304 (1.4301)
3	Housing adapter	316L (1.4435)
4	Disc	304 (1.4301)
5	Screw nut	A4
	Washer	A2

Connecting parts FMP41C

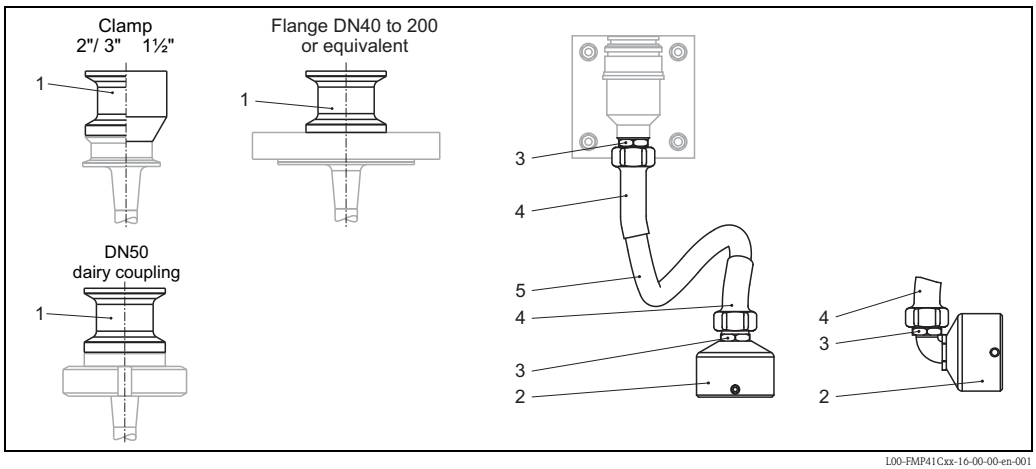

L00-FMP41Cxx-16-00-00-en-001

Pos.	Part	Material
1	Adapter	316L (1.4435)
2	Adapter	316L (1.4404/1.4435)
	Setscrew	A2
3	Hose fitting	CuZn nickel-plated
4	Shrink hose	Polyolefin
5	Hose	PVC

Connecting parts FMP45

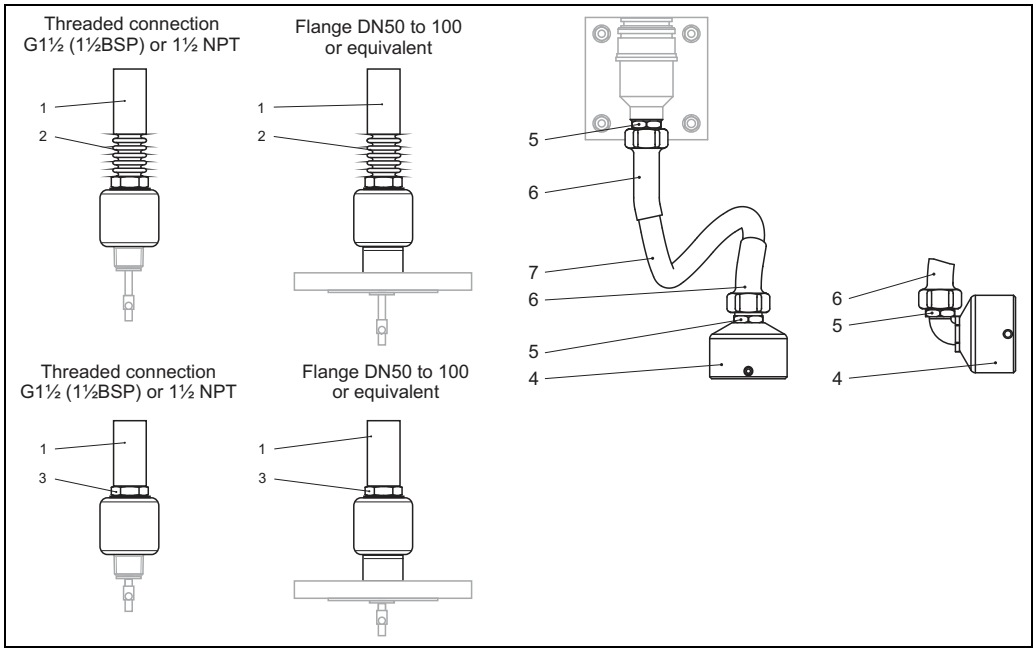

Pos.	Part	Material
1	Housing adapter	304 (1.4301)
2	Temperature reduction (400 °C)	316L (1.4404)
3	Temperatur reduction (280 °C)	316L (1.4404)
4	Adapter	316L (1.4404/1.4435)
	Setscrew	A2
5	Hose fitting	CuZn nickel-plated
6	Shrink hose	Polyolefin
7	Hose	PVC

Material (in contact with process)

FMP41C

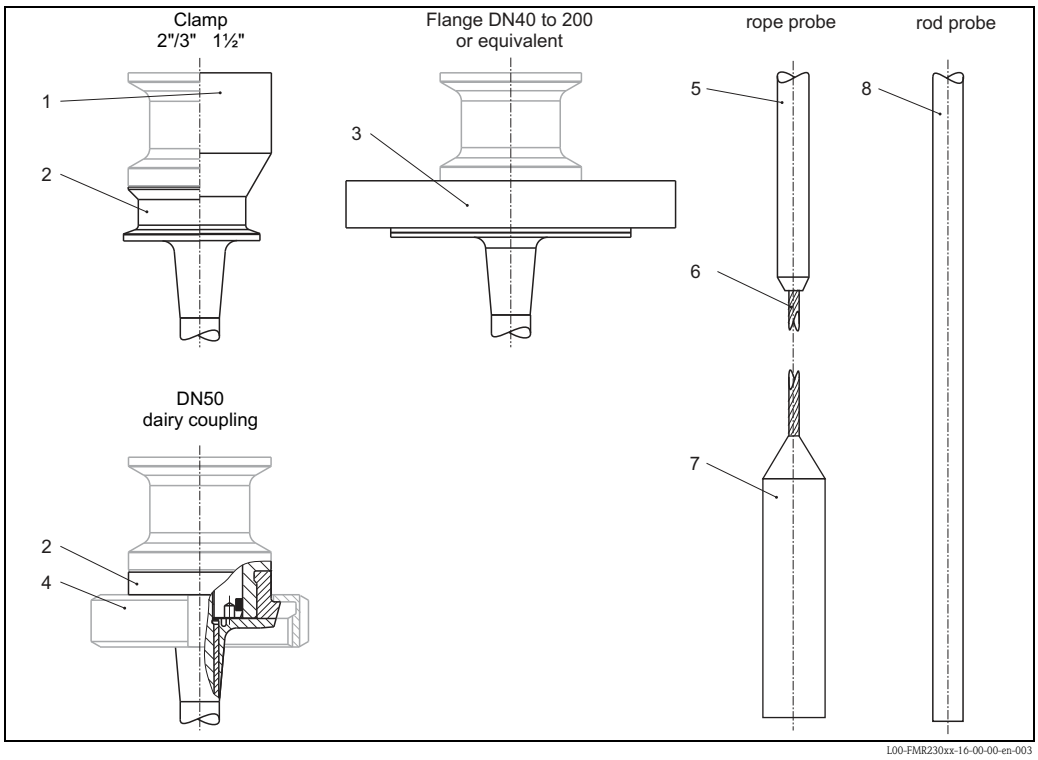

Pos.	Part	Material	
1	Process adapter	316L (1.4435)	
2	Process connection (clamp)	316L (1.4435)	Coating: PFA (2.6 mm)/PTFE
	Process connection (dairy coupling)	316L (1.4435)	Coating: PFA (4 mm)/PTFE
3	Flange	316L (1.4404/1.4435)	Coating: PFA (2 mm)/PTFE
4	Coupling nut	1.4307	
5	Press in sleeve	316L (1.4404/1.4435)	Coating: PFA (2 mm)/PTFE
6	Rope	316 (1.4401)	Coating: PFA (0.75 mm)/PTFE
7	Ballast weight	316L (1.4435)	Coating: PFA (2 mm)/PTFE
8	Rod probe	316L (1.4404)	Coating: PFA (2 mm)/PTFE

Note!
Plastic parts in contact with the process have been tested according to USP <88> Class VI-70°C.

FMP45

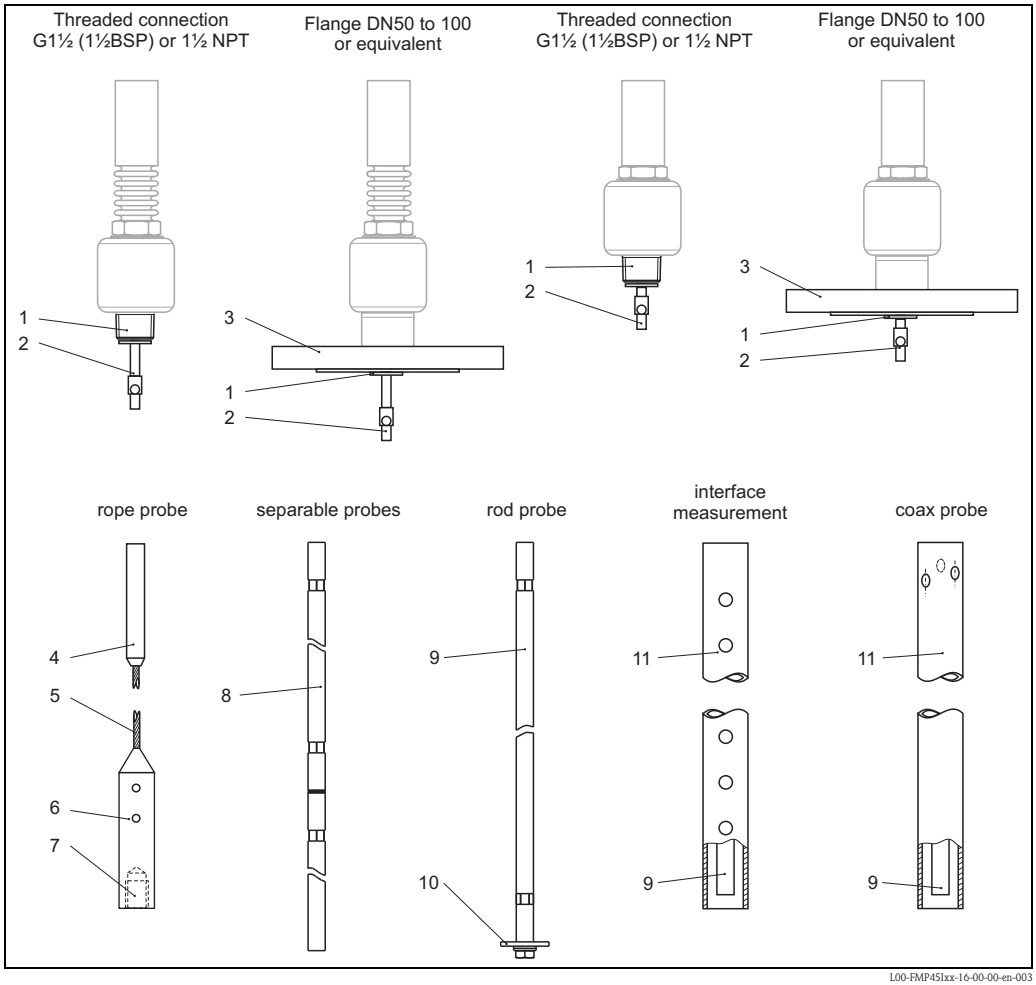

Pos.	Part	Material	
1	Coupling	316L (1.4404)	
2	Inner conductor	2.4602	
	Counter nut	316L (1.4435)	
	Nordlock-washer	1.4547	
3	Flange	316L (1.4404/1.4435)	
4	Press in sleeve	316L (1.4404/1.4435)	
5	Rope	316 (1.4401)	
6	Ballast weight	316L (1.4435)	
	Setscrew	A4-70	
7	Screw	A2-70	
8	Rod	316L (1.4404/1.4435)	
	Connecting bolt	318LN (1.4462)	
	Nordlock-washer	1.4547	
9	Rod	316L (1.4404/1.4435)	
10	Centering of probe end	Disk: 316L (1.4404); Screw: A4; Nordlock: 1.4547	
11	Coax probe	316L (1.4435)	Interface measurement: 316L (1.4404)
	Spacer	Keramik Al_2O_3; Retaining ring: 1.4568	

	DIN/EN flanges Endress+Hauser supplies DIN/EN flanges made of stainless steel according to AISI 316L (DIN/EN material number 1.4404 or 1.4435). With regard to their temperature stability properties, the materials 1.4404 and 1.4435 are grouped under 13E0 in EN 1092-1 Tab. 18. The chemical composition of the two materials can be identical.
Process connection	See "Ordering information", → 59-57.
Probe	See "Ordering information", → 59-57.

Human interface

Operating concept

The display of the measured value and the configuration of the Levelflex occur locally by means of a large 4-line plain-text display. The guided menu system with integrated help texts ensures quick and safe commissioning. To access the display the cover of the electronic compartment may be removed even in hazardous area (IS and XP). Remote commissioning, including documentation of the measuring point and in-depth analysis functions, is supported by FieldCare, the graphical operating software for Endress+Hauser time-of-flight systems.

Display elements

Liquid crystal display (LCD):

Four lines with 20 characters each. Display contrast adjustable through key combination.

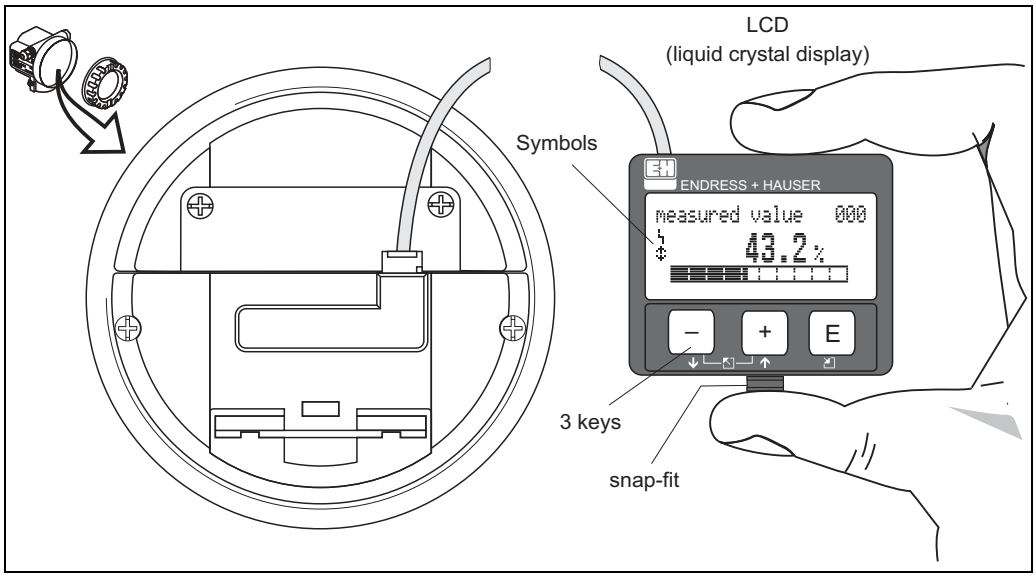

L00-FMxxxxxx-07-00-00-en-001

The VU331 LCD display can be removed to ease operation by simply pressing the snap-fit (see graphic above). It is connected to the device by means of a 500 mm cable.

The following table describes the symbols that appear on the liquid crystal display:

Symbol	Meaning
	ALARM_SYMBOL This alarm symbol appears when the device is in an alarm state. If the symbol flashes, this indicates a warning.
	LOCK_SYMBOL This lock symbol appears when the device is locked, i.e. if no input is possible.
	COM_SYMBOL This communication symbol appears when a data transmission via e.g. HART, PROFIBUS PA or FOUNDATION Fieldbus is in progress.
	SIMULATION_SWITCH_ENABLE This communication symbol appears when simulation in FOUNDATION Fieldbus is enabled via the DIP switch.

Operating elements

The operating elements are located inside the housing and are accessible for operation by opening the lid of the housing.

Function of the keys

Key(s)	Meaning
[+] or [↑]	Navigate upwards in the selection list. Edit numeric value within a function.
[−] or [↓]	Navigate downwards in the selection list. Edit numeric value within a function.
[Esc] [−] [+] or [←]	Navigate to the left within a function group.
[E]	Navigate to the right within a function group, confirmation.
[+] and [E] or [−] and [E]	Contrast settings of the LCD.
[+] and [−] and [E]	Hardware lock / unlock After a hardware lock, operation of the device via display or communication is not possible! The hardware can only be unlocked via the display. A release code must be entered to do so.

Local operation

Operation with VU331

The LC-Display VU331 allows configuration via 3 keys directly at the device. All device functions can be set through a menu system. The menu consists of function groups and functions. Within a function, application parameters can be read or adjusted. The user is guided through a complete configuration procedure.

Display for level measurement

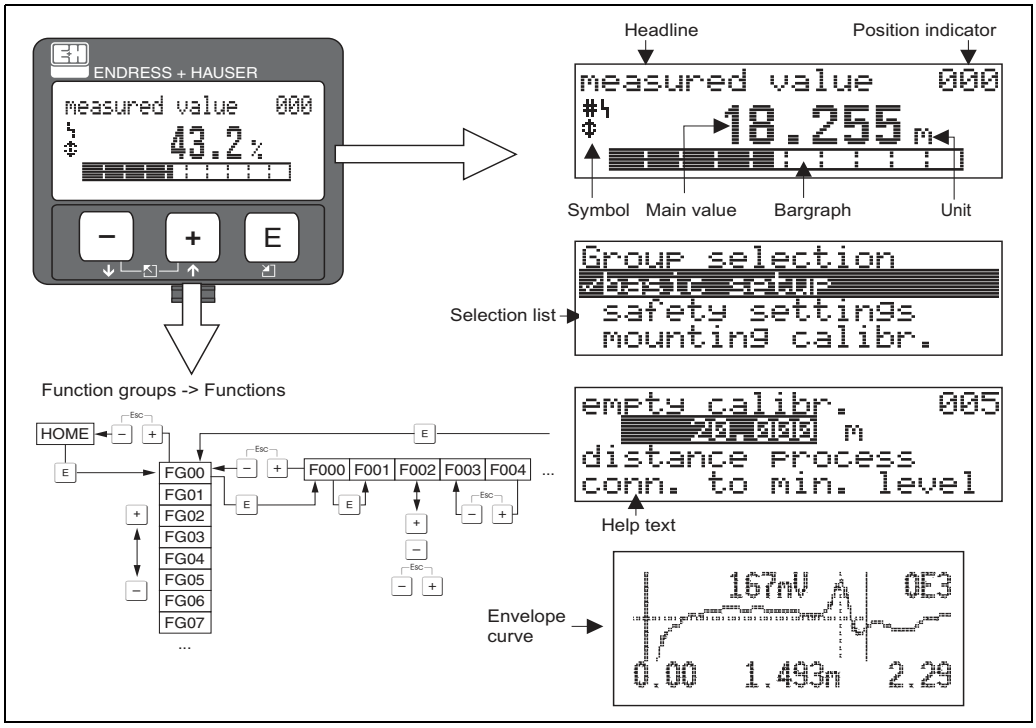

L00-FMRxxxxx-07-00-00-en-002

Display for interface measurement

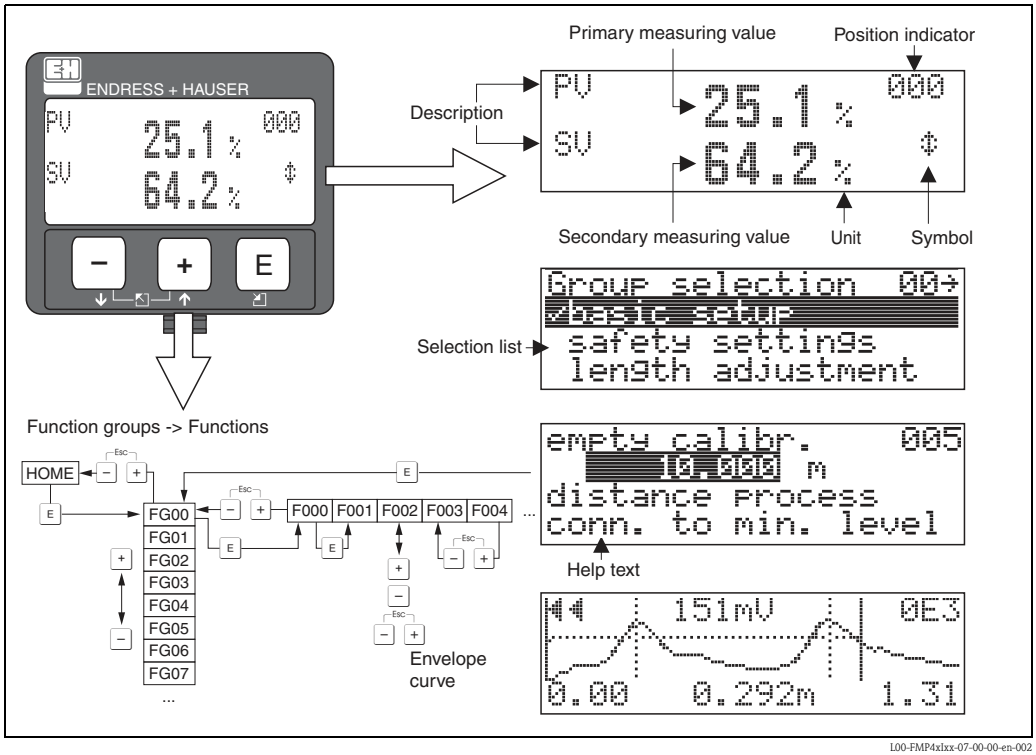

L00-FMP4xIxx-07-00-00-en-002

Remote operation

The Levelflex M can be remotely operated via HART, PROFIBUS PA and FOUNDATION Fieldbus. Onsite adjustments are also possible.

Operation with FieldCare

FieldCare is an Endress+Hauser Plant Asset Management Tool based on FDT technology. You can use FieldCare to configure all your Endress+Hauser devices, as well as devices from other manufacturers that support the FDT standard. Hardware and software requirements you can find on the internet:
www.endress.com → select your country → search: FieldCare → FieldCare → Technical Data.

FieldCare supports the following functions:
- Online configuration of transmitters
- Signal analysis via envelope curve
- Tank linearization
- Loading and saving of device data (upload/download)
- Documentation of the measuring point

Connection options:
- HART via Commubox FXA195 and the USB port of a computer
- PROFIBUS PA via segment coupler and PROFIBUS interface card
- Commubox FXA291 with ToF Adapter FXA291 via service interface

Menu-guided commissioning

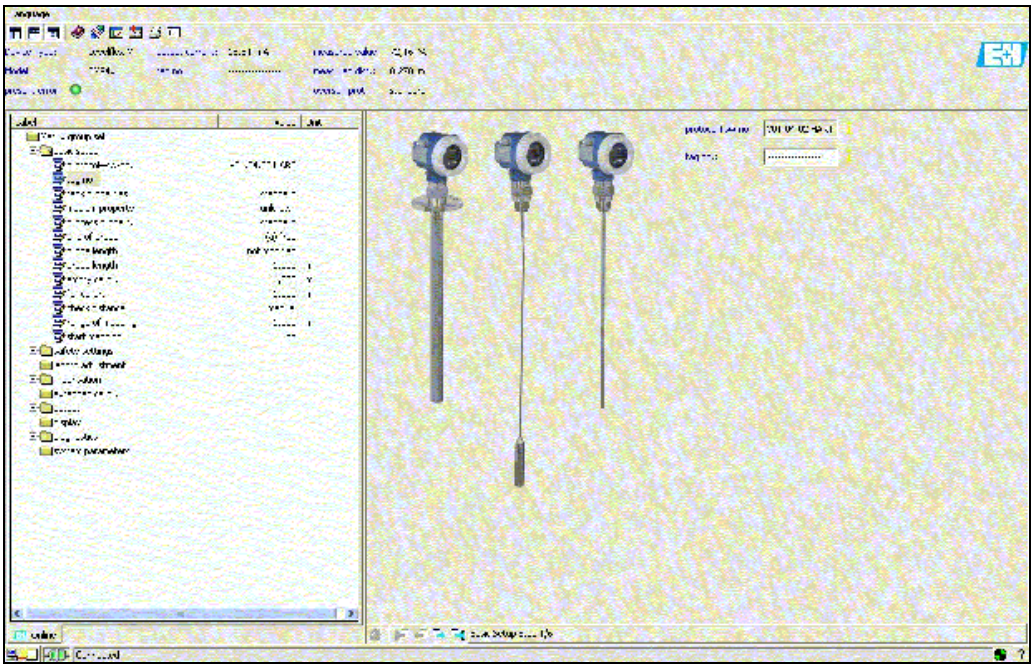

L00-FMP4xxxx-20-00-00-en-001

Signal analysis via envelope curve

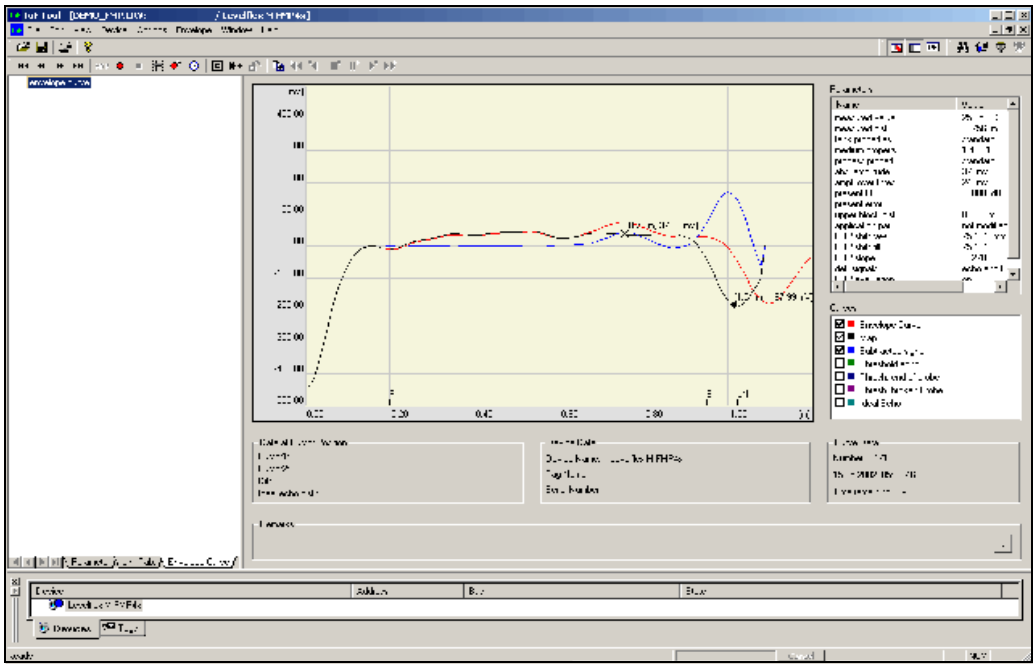

L00-FMP4xxxx-20-00-00-en-007

Tank linearization

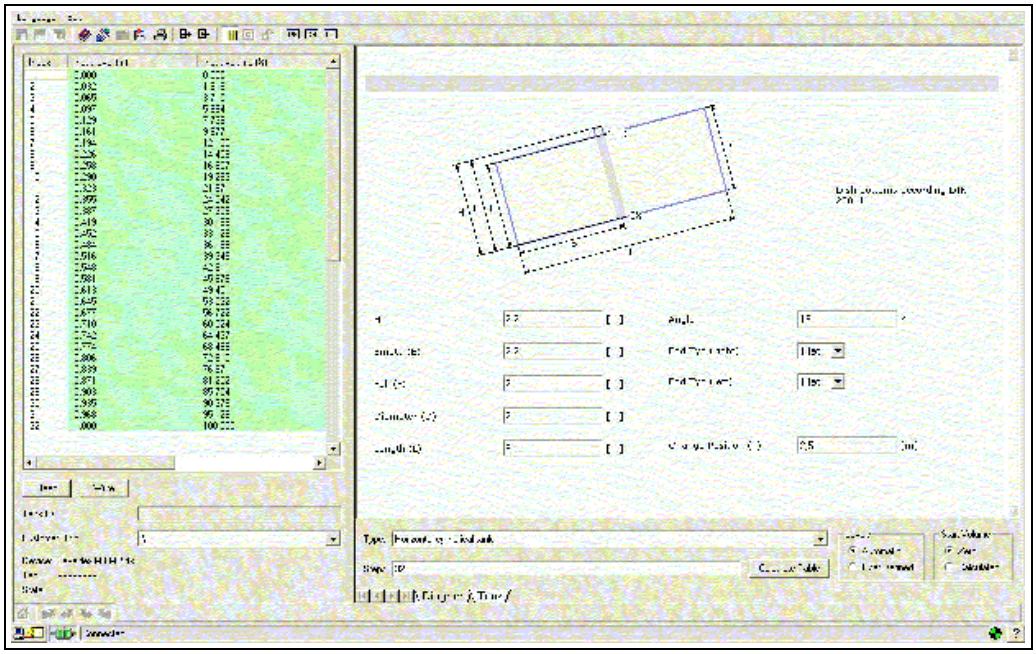

L00-fmp-lxxx-20-00-00-en-041

Operation with NI-FBUS Configurator (only FOUNDATION Fieldbus)

The NI-FBUS Configurator is an easy-to-use graphical environment for creating linkages, loops, and a schedule based on the fieldbus concepts.

You can use the NI-FBUS Configurator to configure a fieldbus network as follows:
- Set block and device tags
- Set device addresses
- Create and edit function block control strategies (function block applications)
- Configure vendor-defined function and transducer blocks
- Create and edit schedules
- Read and write to function block control strategies (function block applications)
- Invoke Device Description (DD) methods
- Display DD menus
- Download a configuration
- Verify a configuration and compare it to a saved configuration
- Monitor a downloaded configuration
- Replace devices
- Save and print a configuration

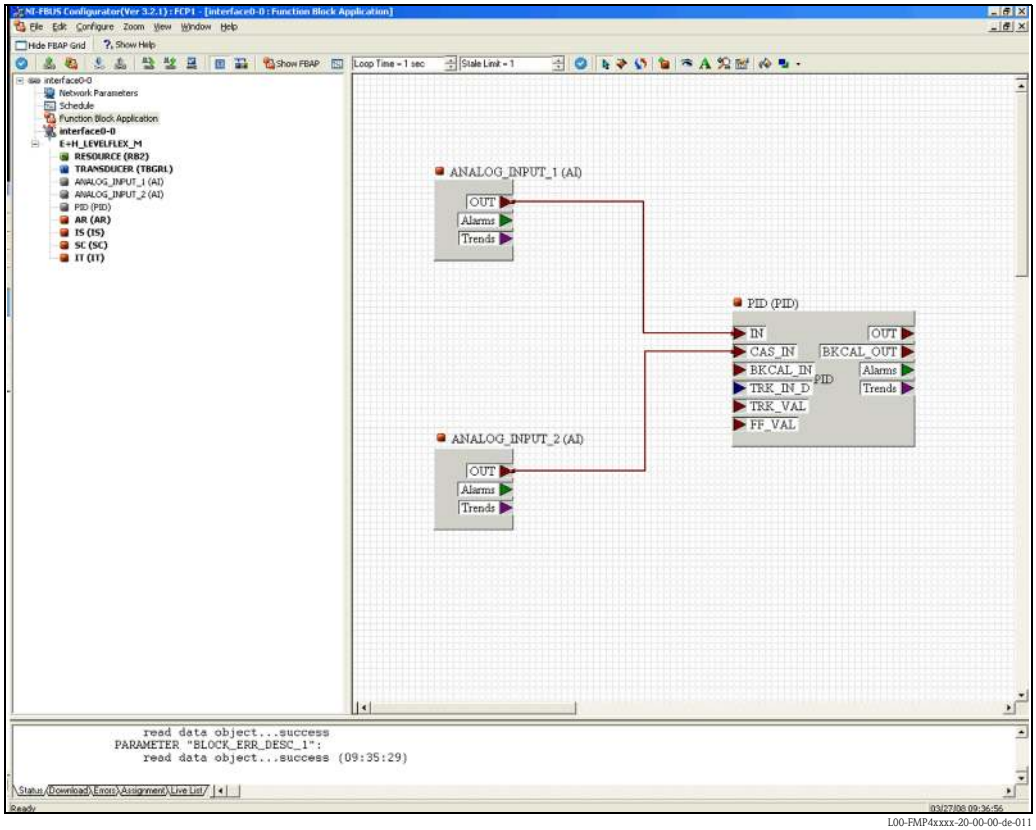

L00-FMP4xxxx-20-00-00-de-011

Operation with the Field Communicator 375, 475

With the Field Communicator 375, 475 , you can configure all the device functions via menu operation.

Note!
Further information on the HART handheld terminal is given in the appropriate Operating Instructions included in the carrying case of the Field Communicator 375, 475.

Certificates and approvals

CE mark

The measuring system meets the legal requirements of the applicable EC guidelines. These are listed in the corresponding EC Declaration of Conformity together with the standards applied. Endress+Hauser confirms successful testing of the device by affixing to it the CE mark.

Ex approval

The devices are certified for use in hazardous areas. The Safety Instructions to be observed are enclosed and referenced on the nameplate:

- Europe: EC type-examination certificate, Safety Instructions XA
- USA: FM Approval, Control Drawing
- Canada: CSA Certificate of Compliance, Control Drawing
- China: NEPSI Explosion Protection Certificate of Conformity, Safety Instructions XA
- Japan: TIIS Certificate for Ex-apparatus

Correlation of the certificates (XA, ZD, ZE) to the device:

FMP41C

Feature		Variant	ZE256F	ZD199F	ZD198F	ZD177F	ZD176F	ZD174F	ZD173F	ZD172F	ZD021F	ZD166F	ZD165F	ZD163F	ZD162F	ZD159F	ZD158F	ZD157F	XA405F	XA404F	XA388F	XA387F	XA377F	XA329F	XA274F	XA273F	XA272F	XA270F	XA269F	XA268F	XA266F	XA264F	XA263F	XA262F	XA261F
10 Approval:	Non-hazardous area	A																																	
	NEPSI Ex emb (ia) IIC T6	C																					X												
	Non-hazardous area, WHG	F	X																																
	ATEX II 3G Ex nA II T6	G																						X											
	NEPSI Ex ia IIC T6	I																	X	X															
	NEPSI Ex d(ia) IIC T6	J																				X													
	*TIIS Ex ia IIC T4	K																																	
	TIIS Ex d (ia) IIC T4	L																																	
	CSA General Purpose	N																																	
	*NEPSI DIP	Q																																	
	NEPSI Ex nA II T6	R																			X														
	FM IS Cl.I,II,III Div.1 Gr. A-G N.I., Zone 0, 1, 2	S									X	X	X	X	X		X	X																	
	FM XP Cl.I,II,III Div.1 Gr. A-G, Zone 1, 2	T														X																			
	CSA IS Cl.I,II,III Div.1 Gr. A-D, G + coal dust, N.I., Zone 0, 1, 2	U		X	X	X	X		X	X																									
	CSA XP Cl.I,II,III Div.1 Gr. A-D, G + coal dust, N.I., Zone 1, 2	V						X																											
	ATEX II 1/2G Ex ia IIC T6 Note safety instruction (XA) (electrostatic charging)!	1																							X	X		X	X				X	X
	ATEX II 2G Ex emb (ia) IIC T6 Note safety instruction (XA) (electrostatic charging)!	3																													X				
	ATEX II 1/2G Ex ia IIC T6, ATEX II 1/3D Note safety instruction (XA) (electrostatic charging)!	5																							X			X			X				
	ATEX II 1/2G Ex ia IIC T6, WHG Note safety instruction (XA) (electrostatic charging)!	6	X																							X	X		X	X				X	X
	ATEX II 1/2G Ex d (ia) IIC T6 Note safety instruction (XA) (electrostatic charging)!	7																															X		
	ATEX II 1/2G Ex ia IIC T6, ATEX II 1/3D, WHG Note safety instruction (XA) (electrostatic charging)!	8	X																							X			X			X			
40 Power supply Output:	2-wire 4-20mA SIL HART	B			X		X	X		X			X		X	X		X		X	X	X	X	X	X	X		X	X		X	X	X	X		X
	2-wire PROFIBUS PA	D		X		X		X	X		X	X		X		X	X		X		X	X	X	X	X	X		X	X		X	X	X	X	
	2-wire FOUNDATION Fieldbus	F		X		X		X	X		X	X		X		X	X		X		X	X	X	X	X	X		X	X		X	X	X	X	
	4-wire 90-250VAC 4-20mA SIL HART	G																																	
	4-wire 10.5-32VDC 4-20mA SIL HART	H																																	
	2-wire 4-20mA HART, Interface	K			X		X	X		X			X		X	X		X		X	X	X	X	X	X		X	X		X	X	X		X
70 Housing:	F12 Alu, coated IP68 NEMA 6P	A							X	X	X						X	X	X	X			X							X			X	X
	F23 316L IP68 NEMA 6P	B				X	X				X			X	X				X	X	X			X				X	X	X					
	T12 Alu, coated IP68 NEMA 6P	C						X								X					X	X	X									X	X		
	T12 Alu, coated IP68 NEMA 6P + OVP	D		X	X						X	X	X						X	X	X			X	X	X	X								
80 Cable entry:	thread M20 (Ex d > thread M20)	2																	X	X	X	X	X												
	thread G1/2	3																	X	X	X	X	X												
	thread NPT1/2	4																	X	X	X	X	X												
	Plug M12	5																	X	X	X														
	Plug 7/8"	6																	X	X	X														

FMP45:

Feature		Variant	ZE256F	ZD117F	ZD116F	ZD114F	ZD113F	ZD083F	ZD082F	ZD081F	ZD080F	ZD021F	ZD110F	ZD109F	ZD107F	ZD106F	ZD078F	ZD077F	ZD076F	ZD075F	XA386F	XA380F	XA379F	XA378F	XA376F	XA330F	XA217F	XA216F	XA215F	XA213F	XA212F	XA211F	XA173F	XA172F	XA168F	XA167F	XA166F	XA165F	XA164F
10 Approval:	Non-hazardous area	A																																				
	NEPSI Ex emb (ia) IIC T6	C																							X														
	Non-hazardous area, WHG	F	X																																				
	ATEX II 3G Ex nA II T6	G																							X														
	NEPSI Ex ia IIC T6	I																					X	X															
	NEPSI Ex d(ia) IIC T6	J																				X																	
	TIIS Ex d (ia) IIC T1	K																																				
	TIIS Ex d (ia) IIC T2	L																																				
	FM DIP Cl.II Div.1 Gr. E-G N.I.	M															X																					
	CSA General Purpose	N																																				
	CSA DIP Cl.II Div.1 Gr. G + coal dust, N.I.	P						X																														
	*NEPSI DIP	Q																																				
	NEPSI Ex nA II T6	R																			X																	
	FM IS Cl.I,II,III Div.1 Gr. A-G N.I., zone 0, 1, 2	S										X	X	X	X	X			X	X																		
	FM XP Cl.I,II,III Div.1 Gr. A-G, zone 1, 2	T																X																				
	CSA IS Cl.I,II,III Div.1 Gr. A-D, G + coal dust, N.I., zone 0, 1	U		X	X	X	X			X	X																											
	CSA XP Cl.I,II,III Div.1 Gr. A-D, G + coal dust, N.I., zone 1, 2	V							X																													
	ATEX II 1/2G Ex ia IIC T6/IECEx Zone0/1	1																									X	X		X	X					X	X
	ATEX II 1/2D/IEC Ex td A20/21, Alu blind cover	2																								X			X			X	X	X			
	ATEX II 1/2G Ex emb (ia) IIC T6/IECEx	3																																	X			
	ATEX II 1/3D/IEC Ex td A20/22 [1)]	4																								X			X			X	X	X			
	ATEX II 1/2G Ex ia IIC T6, ATEX II 1/3D	5																								X			X				X					
	ATEX II 1/2G Ex ia IIC T6, WHG	6	X																								X	X		X	X					X	X
	ATEX II 1/2G Ex d (ia) IIC T6/IEC Ex d (ia) IIC T6	7																																		X		
	ATEX II 1/2G Ex ia IIC T6, ATEX II 1/3D, WHG	8	X																							X			X				X					
50 Power supply Output:	2-wire 4-20mA SIL HART	B			X		X		X		X			X		X		X		X	X	X		X	X	X	X		X	X		X	X	X		X	
	2-wire PROFIBUS PA	D		X		X			X	X		X	X		X			X	X		X	X	X		X	X	X	X		X	X		X	X	X	X	
	2-wire FOUNDATION Fieldbus	F		X		X			X	X		X	X		X			X	X		X	X	X		X	X	X	X		X	X		X	X	X	X	
	4-wire 90-250VAC 4-20mA SIL HART	G						X									X																		X			
	4-wire 10.5-32VDC 4-20mA SIL HART	H						X									X																		X			
	2-wire 4-20mA HART, Interface	K			X		X		X		X			X		X		X		X	X	X		X	X	X	X		X	X		X	X	X		X	
80 Housing:	F12 Alu, coated IP68 NEMA6P	A						X		X	X	X					X		X	X	X		X	X		X								X	X		X	X
	F23 316L IP68 NEMA6P	B				X	X					X			X	X					X		X	X		X				X	X	X						
	T12 Alu, coated IP68 NEMA6P,	C							X									X			X	X			X								X				X	X	
	T12 Alu, coated IP68 NEMA6P + OVP	D		X	X							X	X	X							X		X	X		X	X	X	X									
90 Cable entry:	thread M20 (EEx d > thread M20)	2																			X	X	X	X	X													
	thread G1/2	3																			X	X	X	X	X													
	thread NPT1/2	4																			X	X	X	X	X													
	Plug M12	5																			X		X	X														
	Plug 7/8"	6																			X		X	X														

1) Housing F12/F23/T12-OVP: In combination with electronics B, D or F supply intrinsically safe.

** in preparation*

Suitability for hygenic processes (Levelflex M FMP41C)

Overview of permitted process connections from, → 59.

Note!
The gap-free connections can be cleaned without residue using the usual cleaning methods.

Many versions of the Levelflex M meet the requirements of 3A-Sanitary Standard No. 74. Endress+Hauser confirms this by attaching the 3A symbol.

Overfill prevention

WHG. See "Ordering information", → 59 (see ZE00256F/00/DE).
SIL 2, for 4 to 20 mA output signal (see SD00174F/00/EN "Functional Safety Manual").

Telecommunications

Complies with "Part 15" of the FCC rules for an "Unintentional Radiator". All probes meet the requirements for a "Class A Digital Device".
In addition, all probes in metallic tanks as well as the coax probe of the FMP45 meet the requirements for a "Class B Digital Device".

External standards and guidelines

The European directives and standards applied can be taken from the associated EC Declarations of Conformity. In addition, the following also applied for Levelflex M:

EN 60529
Protection class of housing (IP-code)

NAMUR - international user association of automation technology in process industries.
- NE21
  Electromagnetic compatibility (EMC) of industrial process and laboratory control equipment.
- NE43
  Standardization of the signal level for the failure information of digital transmitters.

Pressure Equipment Directive

The FMP45 corresponds to the 97/23/EC Directive (Pressure Equipment Directive). It is a pressure accessory with a volume < 0.1 l, corresponding to Category I. Conformity assessment was carried out as per Module A, the design as per EN 13445 and AD 2000 technical specifications. FMP45 is not suitable for use with unstable gases at nominal pressures above 200 bar.

Steam boiler approval

The FMP45 is approved as a limiting device for high water (HW) and low water (LW) for liquids in containers which are subject to the requirements of EN 12952-11 and EN 12953-9 (certified by TÜV Nord).
See "Ordering information", → 64. Further information can be found in the safety instructions for steam boiler approval (SD00288F/00/EN).

Ordering information

Levelflex M FMP41C **Device selection**

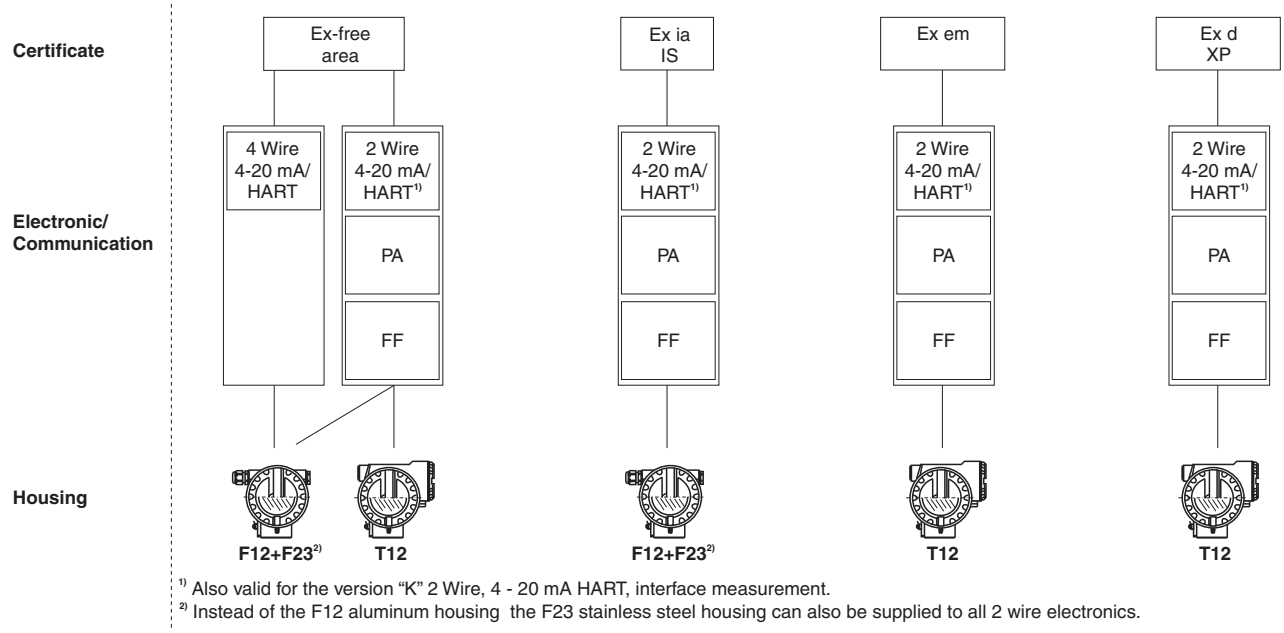

L00-FMP41xxx-16-00-00-en-002

Note!
For orders with a display, the housing cover is delivered with an inspection glass. For orders without a display, a dummy cover is delivered.

Exception: For orders with the ATEX II 1/2 D dust ignition-proof certificate, a dummy cover is always delivered, even for orders with a built-in display.

Ordering information Levelflex M FMP41C

10	Approval:	
	A	Non-hazardous area
	F	Non-hazardous area, WHG
	1	ATEX II 1/2G Ex ia IIC T6 Note safety instruction (XA) (electrostatic charging)!
	3	ATEX II 2G Ex em (ia) IIC T6 Note safety instruction (XA) (electrostatic charging)!
	5	ATEX II 1/2G Ex ia IIC T6, ATEX II 1/3D Note safety instruction (XA) (electrostatic charging)!
	6	ATEX II 1/2G Ex ia IIC T6, WHG Note safety instruction (XA) (electrostatic charging)!
	7	ATEX II 1/2G Ex d (ia) IIC T6 Note safety instruction (XA) (electrostatic charging)!
	8	ATEX II 1/2G Ex ia IIC T6, ATEX II 1/3D, WHG Note safety instruction (XA) (electrostatic charging)!
	G	ATEX II 3G Ex nA II T6
	C	NEPSI Ex emb (ia) IIC T6
	I	NEPSI Ex ia IIC T6
	J	NEPSI Ex d(ia) IIC T6
	Q	NEPSI DIP (in preparation)
	R	NEPSI Ex nA II T6
	S	FM IS Cl.I,II,III Div.1 Gr.A-G N.I., zone 0, 1, 2
	T	FM XP Cl.I,II,III Div.1 Gr.A-G, zone 1, 2
	N	CSA General Purpose
	U	CSA IS Cl.I,II,III Div.1 Gr.A-D,G + coal dust, N.I., zone 0, 1, 2
	V	CSA XP Cl.I,II,III Div.1 Gr.A-D,G + coal dust, N.I., zone 1, 2
	K	TIIS Ex ia IIC T4 (in preparation)
	L	TIIS Ex d (ia) IIC T4
	Y	Special version, TSP-No. to be spec.

20		Probe:	
		A	..... mm, rope PFA>316, 150mm, Center rod, nozzle height max 150mm
		B	..... mm, rope PFA>316, 300mm, Center rod, nozzle height max 300mm
		C	..... mm, rope PFA>316, 450mm, Center rod, nozzle height max 450mm
		D	..... inch, rope PFA>316, 6inch, Center rod, nozzle height max 6inch
		E	..... inch, rope PFA>316, 12inch, Center rod, nozzle height max 12inch
		G	..... inch, rope PFA>316, 18inch, Center rod, nozzle height max 18inch
		K	..... mm, rod PFA>316L
		M	..... inch, rod PFA>316L
		Y	Special version, TSP-No. to be spec.

30			Process connection:	
			AEK	1-1/2" 150lbs, PTFE >316/316L flange ANSI B16.5
			AFK	2" 150lbs, PTFE >316/316L flange ANSI B16.5
			AGK	3" 150lbs, PTFE >316/316L flange ANSI B16.5
			AHK	4" 150lbs, PTFE >316/316L flange ANSI B16.5
			AJK	6" 150lbs, PTFE >316/316L flange ANSI B16.5
			AQK	1-1/2" 300lbs, PTFE >316/316L flange ANSI B16.5
			ARK	2" 300lbs, PTFE >316/316L flange ANSI B16.5
			ASK	3" 300lbs, PTFE >316/316L flange ANSI B16.5
			ATK	4" 300lbs, PTFE >316/316L flange ANSI B16.5
			CEK	DN40 PN16-40, PTFE >316L flange EN1092-1 (DIN2527 C)
			CFK	DN50 PN10-40, PTFE >316L flange EN1092-1 (DIN2527 C)
			CGK	DN80 PN10/16, PTFE >316L flange EN1092-1 (DIN2527 C)
			CHK	DN100 PN10/16, PTFE >316L flange EN1092-1 (DIN2527 C)
			CJK	DN150 PN10/16, PTFE >316L flange EN1092-1 (DIN2527 C)
			CSK	DN80 PN25/40, PTFE >316L flange EN1092-1 (DIN2527 C)
			CTK	DN100 PN25/40, PTFE >316L flange EN1092-1 (DIN2527 C)
			KEK	10K 40A, PTFE >316L flange JIS B2220
			KFK	10K 50A, PTFE >316L flange JIS B2220
			KGK	10K 80A, PTFE >316L flange JIS B2220
			KHK	10K 100A, PTFE >316L flange JIS B2220
			MRK	DIN11851 DN50 PN40 slotted-nut, PTFE >316L
			TCK	Tri-Clamp ISO2852 1-1/2", PTFE >316L
			TDK	Tri-Clamp ISO2852 2", PTFE >316L
			TFK	Tri-Clamp ISO2852 3", PTFE >316L

30		**Process connection:**
	TJK	Tri-Clamp ISO2852 1-1/2", PTFE >316L, 3A EHEDG
	TLK	Tri-Clamp ISO2852 2", PTFE >316L, 3A EHEDG
	TNK	Tri-Clamp ISO2852 3", PTFE >316L, 3A EHEDG
	YY9	Special version, TSP-No. to be spec.
40		**Power Supply; Output:**
	B	2-wire; 4-20mA SIL HART
	D	2-wire; PROFIBUS PA
	F	2-wire; FOUNDATION Fieldbus
	G	4-wire 90-250VAC; 4-20mA SIL HART
	H	4-wire 10.5-32VDC; 4-20mA SIL HART
	K	2-wire; 4-20mA HART, interface measurement
	Y	Special version, TSP-No. to be spec.
50		**Operation:**
	1	W/o display, via communication
	2	4-line display VU331, envelope curve display on site
	3	Prepared for FHX40, remote display (accessory)
	9	Special version, TSP-No. to be spec.
60		**Type of probe:**
	1	Compact, basic version
	3	Remote, cable 3m, top entry
	4	Remote, cable 3m, side entry
	9	Special version, TSP-No. to be spec.
70		**Housing:**
	A	F12 Alu, coated IP68 NEMA6P
	B	F23 316L IP68 NEMA6P
	C	T12 Alu, coated IP68 NEMA6P, separate conn. compartment
	D	T12 Alu, coated IP68 NEMA6P + OVP[1], separate conn. compartment
	Y	Special version, TSP-No. to be spec.
80		**Cable Entry:**
	2	Gland M20 (EEx d > thread M20)
	3	Thread G1/2
	4	Thread NPT1/2
	5	Plug M12
	6	Plug 7/8"
	9	Special version, TSP-No. to be spec.
90		**Additional options:**
	A	Basic version
	C	EN10204-3.1 material, pressurized, (316/316L pressurized) inspection certificate
	H	5-point, linearity protocol, see additional spec.
	K	5-point, 3.1, pressurized, 5-point linearity protocol, see additional spec., EN10204-3.1material, perssurized (316/316L pressurized), inspection certificate
	Y	Special version, TSP-No. to be spec.
995		**Marking:**
	1	Tagging (TAG), see additional spec.
	2	Bus address, see additional spec.
FMP41C-		Complete product designation

[1] OVP = overvoltage protection

Levelflex M FMP45 **Device selection**

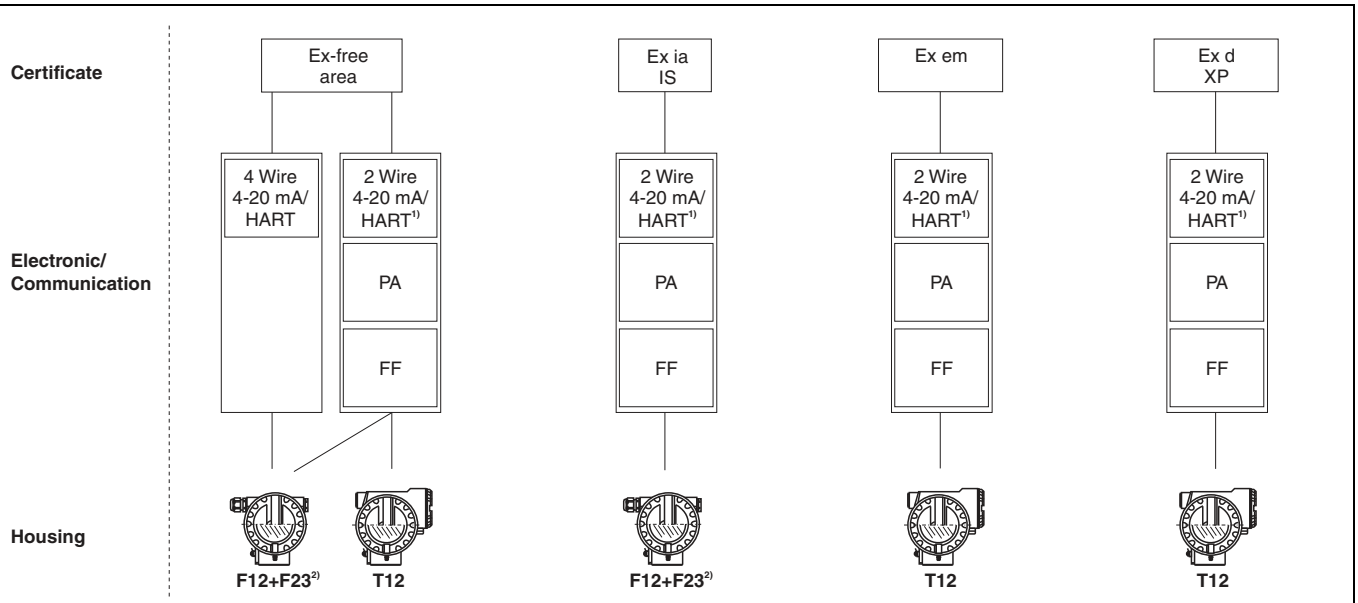

1) Also valid for the version "K" 2 Wire, 4 - 20 mA HART, interface measurement.
2) Instead of the F12 aluminum housing the F23 stainless steel housing can also be supplied to all 2 wire electronics.

L00-FMP45Ixx-16-00-00-en-002

Note!
For orders with a display, the housing cover is delivered with an inspection glass. For orders without a display, a dummy cover is delivered

Exception: For orders with the ATEX II 1/2 D dust ignition-proof certificate, a dummy cover is always delivered, even for orders with a built-in display.

Ordering information Levelflex M FMP45

10	Approval:	
	A	Non-hazardous area
	F	Non-hazardous area, WHG
	1	ATEX II 1/2G EEx ia IIC T6/IECEx Zone 0/1
	2	ATEX II 1/2D / IEC Ex td A20/21, Alu blind cover
	3	ATEX II 1/2G EEx emb (ia) IIC T6/IECEx Zone 0/1
	4	ATEX II 1/3D / IEC Ex td A20/22
	5	ATEX II 1/2G EEx ia IIC T6, ATEX II 1/3D
	6	ATEX II 1/2G EEx ia IIC T6, WHG
	7	ATEX II 1/2G EEx d (ia) IIC T6 / IEC Ex d(ia) IIC T6
	8	ATEX II 1/2G EEx ia IIC T6, ATEX II 1/3D, WHG
	G	ATEX II 3G EEx nA II T6
	H	ATEX II 3G ic IIC T6 Gc
	C	NEPSI Ex emb (ia) IIC T6
	I	NEPSI Ex ia IIC T6
	J	NEPSI Ex d(ia) IIC T6
	Q	NEPSI DIP (in preparation)
	R	NEPSI Ex nA II T6
	M	FM DIP Cl.II Div.1 Gr. E-G N.I.
	S	FM IS Cl.I,II,III Div.1 Gr. A-G N.I., zone 0, 1, 2
	T	FM XP Cl.I,II,III Div.1 Gr. A-G, zone 1, 2
	N	CSA General Purpose
	P	CSA DIP Cl.II Div.1 Gr. G + coal dust, N.I.
	U	CSA IS Cl.I,II,III Div.1 Gr. A-D,G + coal dust, N.I., zone 0, 1, 2
	V	CSA XP Cl.I,II,III Div.1 Gr. A-D,G + coal dust, N.I., zone 1, 2
	K	TIIS Ex d (ia) IIC T1
	L	TIIS Ex d (ia) IIC T2
	Y	Special version, TSP-No. to be spec.

20		Process temperature:	
		A	-200...+280 °C / -328...+536 °F (XT); saturated steam max. 200 °C (392 °F)
		B	-200...+400 °C / -328...+752 °F (HT)
		Y	Special version, TSP-No. to be spec.

30			Probe:	
			A	..... mm, rope 4mm, 316
			C	..... inch, rope 1/6", 316
			K	..... mm, rod 16 mm, 316L
			L	..... mm, coax, 316L
			M	..... inch, rod 16 mm, 316L
			N	..... inch, coax, 316L
			S	..... mm, rod 16 mm, 316L, 500 mm divisible
			T	..... mm, rod 16 mm, 316L, 1000 mm divisible
			U	..... inch, rod 16 mm, 316L, 20 in divisible
			V	..... inch, rod 16 mm, 316L, 40 in divisible
			Y	Special version, TSP-No. to be spec.

40				Process connection:	
				AFJ	2" 150lbs RF, 316/316L flange ANSI B16.5
				AGJ	3" 150lbs RF, 316/316L flange ANSI B16.5
				AHJ	4" 150lbs RF, 316/316L flange ANSI B16.5
				ARJ	2" 300/600lbs RF, 316/316L flange ANSI B16.5
				ASJ	3" 300/600lbs RF, 316/316L flange ANSI B16.5
				ATJ	4" 300lbs RF, 316/316L flange ANSI B16.5
				A1J	2" 1500lbs RF, 316/316L flange ANSI B16.5
				A2J	3" 1500lbs RF, 316/316L flange ANSI B16.5
				A3J	4" 600lbs RF, 316/316L flange ANSI B16.5
				A4J	4" 900lbs RF, 316/316L flange ANSI B16.5
				A5J	4" 1500lbs RF, 316/316L flange ANSI B16.5
				CHJ	DN100 PN10/16 B1, 316L flange EN1092-1 (DIN2527 C)
				CRJ	DN50 PN10-40 B1, 316L flange EN1092-1 (DIN2527 C)
				CSJ	DN80 PN10-40 B1, 316L flange EN1092-1 (DIN2527 C)
				CTJ	DN100 PN25/40 B1, 316L flange EN1092-1 (DIN2527 C)
				C1J	DN50 PN63 B2, 316L flange EN1092-1 (DIN2527 E)
				C2J	DN50 PN100 B2, 316L flange EN1092-1 (DIN2527 E)
				C3J	DN80 PN63 B2, 316L flange EN1092-1 (DIN2527 E)
				C4J	DN80 PN100 B2, 316L flange EN1092-1 (DIN2527 E)
				C5J	DN100 PN63 B2, 316L flange EN1092-1 (DIN2527 E)

40	Process connection:
C6J	DN100 PN100 B2, 316L flange EN1092-1 (DIN2527 E)
KFJ	10K 50A RF, 316L flange JIS B2220
KGJ	10K 80A RF, 316L flange JIS B2220
KHJ	10K 100A RF, 316L flange JIS B2220
K3J	63K 50A RF, 316L flange JIS B2220
K4J	63K 80A RF, 316L flange JIS B2220
K5J	63K 100A RF, 316L flange JIS B2220
GGJ	Thread ISO228 G1-1/2, 200bar, 316L
GJJ	Thread ISO228 G1-1/2, 400bar, 316L
RGJ	Thread ANSI NPT1-1/2, 200bar, 316L
RJJ	Thread ANSI NPT1-1/2, 400bar, 316L
YY9	Special version, TSP-No. to be spec.

50	Power supply; output:
B	2-wire; 4-20mA SIL HART
D	2-wire; PROFIBUS PA
F	2-wire; FOUNDATION Fieldbus
G	4-wire 90-250VAC; 4-20mA SIL HART
H	4-wire 10.5-32VDC; 4-20mA SIL HART
K	2-wire; 4-20mA HART, interface measurement
Y	Special version, TSP-No. to be spec.

60	Operation:
1	W/o display, via communication
2	4-line display VU331, envelope curve display on site
3	Prepared for FHX40, remote display (accessory)
9	Special version, TSP-No. to be spec.

70	Type of probe:
B	Compact, centering disc d=45 mm, 316L, pipe diameter DN50/2"
C	Compact, centering disc d=75 mm, 316L, pipe diameter DN80/3" + DN100/4"
F	Remote, cable 3m, top, center d=45 mm, centering disk d=45 mm, 316L, pipe diameter DN50/2"
G	Remote, cable 3m, top, center d= 75 mm, centering disk d=75 mm, 316L, pipe diameter DN80/3" + DN100/4"
H	Remote, cable 3m, side, center d=45 mm, centering disk d=45 mm, 316L, pipe diamter DN50/2"
I	Remote, cable 3m, side, center d=75 mm, centering disc d=75 mm, 316L, pipe diamter DN80/3" + DN100/4"
1	Compact, basic version
3	Remote, cable 3m, top entry
4	Remote, cable 3m, side entry
9	Special version, TSP-No. to be spec.

80	Housing:
A	F12 Alu, coated IP68 NEMA6P
B	F23 316L IP68 NEMA6P
C	T12 Alu, coated IP68 NEMA6P, separate conn. compartment
D	T12 Alu, coated IP68 NEMA6P + OVP[1], separate conn. compartment
Y	Special version, TSP-No. to be spec.

90	Cable Entry:
2	Gland M20 (EEx d > thread M20)
3	Thread G1/2
4	Thread NPT1/2
5	Plug M12
6	Plug 7/8"
9	Special version, TSP-No. to be spec.

100	Additional options:
A	Basic version
B	EN10204-3.1 material, wetted parts, (316L wetted parts for rod/coax) inspection certificate
C	EN10204-3.1 material, wetted parts, (316L pressurized for rope version) inspection certificate
D	Steam boiler app.+EN10204-3.1 material, Steam boiler approval EN12952-11/12953-9, EN10204-3.1 material, wetted parts (316L wetted parts for rod/coax) inspection certificate
H	5-point linearity protocol, see additional spec.

100											**Additional options:**		
											J	5-point, 3.1, NACE, 5-point linearity protocol, see additional spec., EN10204-3.1 material, NACE MR0175 (316L wetted parts) inspection certificate
											N	EN10204-3.1 material, NACE MR0175, (316L wetted parts) inspection certificate
											U	Steam boiler app. 300 mm / 11" gas phase, Steam boiler approval EN12952-11/12953-9, Gas phase comp. 300 mm / 11" reference rod, EN10204-3.1 material, NACE MR0175 (316L wetted parts) inspection certificate
											V	Steam boiler app. 550 mm / 21" gas phase, Steam boiler approval EN12952-11/12953-9, Gas phase comp. 550 mm / 21" reference rod, EN10204-3.1 material, NACE MR0175 (316L wetted parts) inspection certificate
											Y	Special version, TSP-No. to be spec.
995												**Marking:**	
												1	Tagging (TAG), see additional spec.
												2	Bus address, see additional spec.
FMP45-													Complete product designation

[1] OVP = overvoltage protection

Accessories

Weather protection cover

A weather protection cover made of stainless steel is available for outdoor installation (order code: 543199-0001). The shipment includes the protective cover and tension clamp.

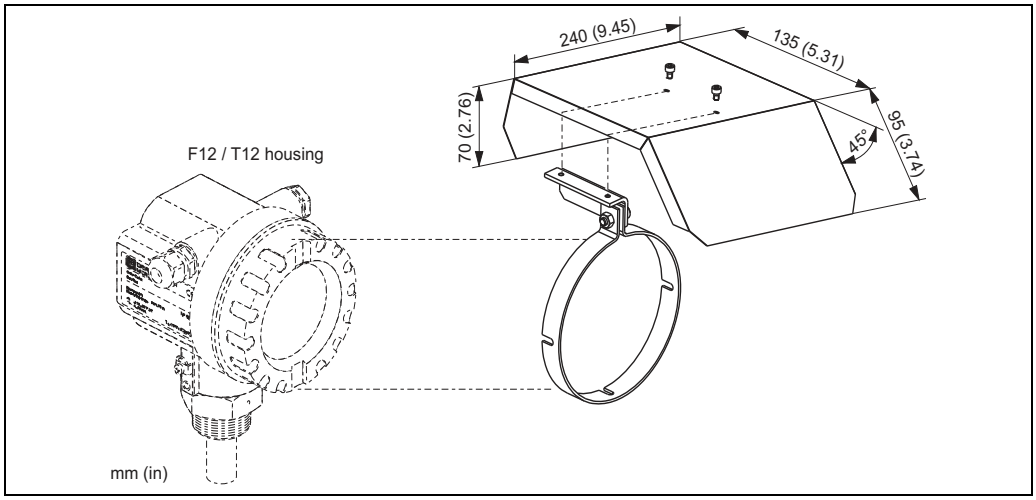

L00-FMR2xxxx-00-00-06-en-001

Welding boss for universal adapter (FMP41C only)

Dimensions of the welding ring		Order-No.
Diameter D [mm]	Height H [mm]	
85	12	52006262
65	8	214880-0002
Material: 316L (1.4435)		

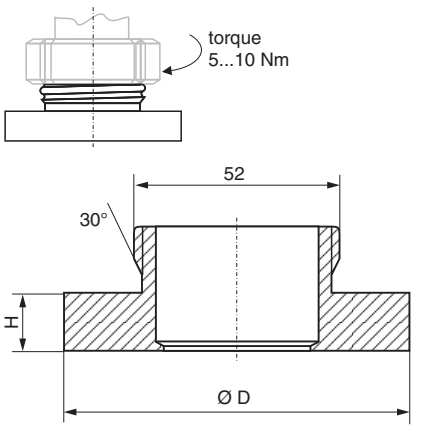

L00-FMP4xxxx-00-00-06-en-006

Remote display FHX40

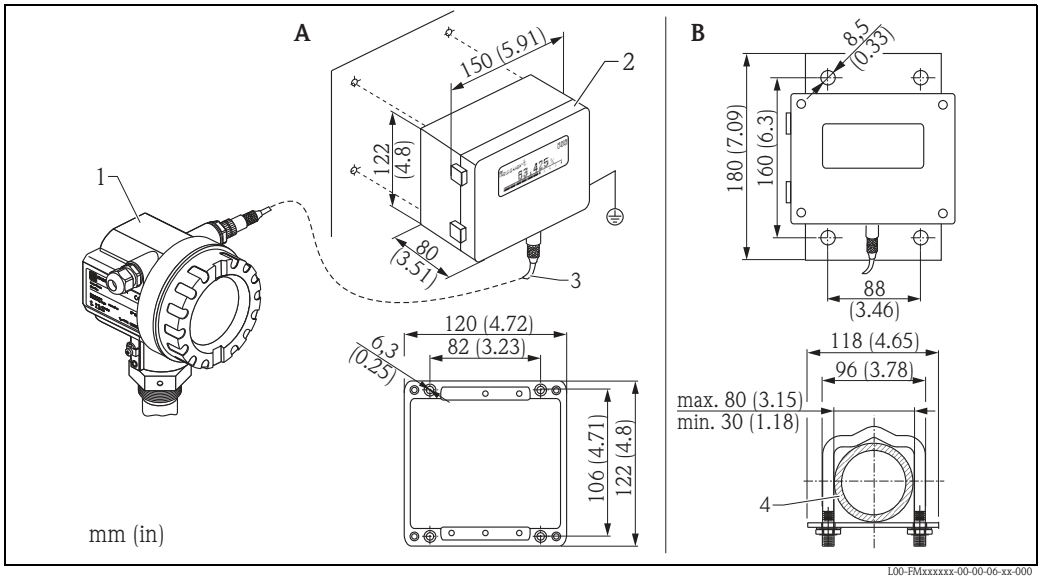

1 Micropilot M, Levelflex M, Prosonic M
2 Separate housing FHX40 (IP65)
3 Cabel
4 Pipe

A Wall mounting (without mounting bracket)
B Pipe mounting (mounting bracket and plate supplied optionally, see product structure)

Note!
For the device families Micropilot FMR2xx, Levelflex FMP4x and Prosonic FMU4x, the remote display FHX40 must be only used for the HART communication version.

Ordering information:

010	**Approval**				
	A	Non-hazardous area			
	2	ATEX II 2G Ex ia IIC T6			
	3	ATEX II 2D Ex ia IIIC T80°C			
	G	IECEx zone1 Ex ia IIC T6/T5			
	S	FM IS Cl.I Div.1 Gr.A-D, zone 0			
	U	CSA IS Cl.I Div.1 Gr.A-D, zone 0			
	N	CSA General Purpose			
	K	TIIS Ex ia IIC T6			
	C	NEPSI Ex ia IIC T6/T5			
	Y	Special version, TSP-no. to be spec.			
020		**Cable**			
	1	20m/65ft; for HART			
	5	20 m/65 ft (> PROFIBUS PA / FOUNDATION Fieldbus)			
	9	Special version, TSP-no. to be spec.			
030			**Additional option**		
			A	Basic version	
			B	Mounting bracket, pipe 1"/ 2"	
			Y	Special version, TSP-no. to be spec.	
995				**Marking**	
				1	Messstelle (TAG), see additional spec.
FHX40 -					Complete product designation

For connection of the remote display FHX40 use the cable which fits the communication version of the respective instrument.

Technical data (cable and housing)

Max. cable length	20 m (66 ft) (fixed length including the cast-on plugs)
Temperature range	–40 to +60 °C (–40 to +140 °F)
Degree of protection	IP65/67 (housing); IP68 (cable) acc. to IEC 60529
Materials	Housing: AlSi12; cable glands: nickle plated brass
Dimensions [mm (in)	122x150x80 (4.8x5.91x3.15) / HxWxD

Materials

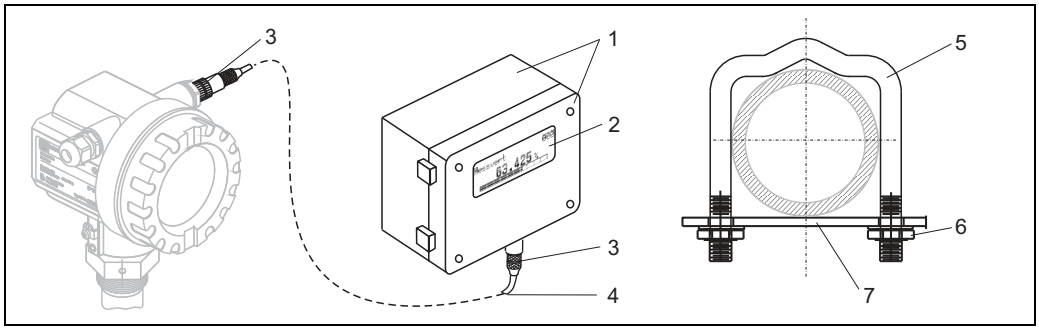

L00-FMxxxxxx-00-00-06-de-003

Position	Part	Material
1	Housing/Cover	AlSi12, Screw: V2A
	Ground terminal	CuZn nickel-plated, Screw: V2A
2	Display	Glass
3	Cable gland	CuZn nickel-plated
4	Cable	PVC
5	Mounting bracket	316 Ti (1.4571) or 316 L (1.4435) or 316 (1.4401)
6	Nut	V4A
7	Plate) Screw set (M5	316 Ti (1.4571) Spring washer: 301 (1.4310) or V2A Screw: V4A, Nut: V4A

Center disks

If the probes with rod version are used in stilling well or bypass, it must be ensured that the probe does not come into contact with the wall. The centering disk fixes the rod probe in the middle of the pipe.

Center disk PEEK Ø1.89-3.74 inch (FMP45 only)

The centering disk is suitable for probes with a rod diameter of 16 mm and can be used in pipes from DN50 (2") up to DN100 (4"). Markings on the 4-leg centering disk ensure a simple tailoring. Hence the centering disk can be adapted to the pipe diameter. See also Operating Instruction BA00377F/00/EN.

- PEEK (statically dissipative)
- Measuring range: –60 °C to +200 °C

Order-no. 71069064

Note!
If the centering disk is inserted in an bypass, it must be positioned below the lower bypass outlet. The has to be accounted for when choosing the probe length.
Generally, the centering disk should not be mounted higher than 50 mm from the probe end.
It is recommended not to insert the PEEK centering disk in the measuring range of the rod probe.

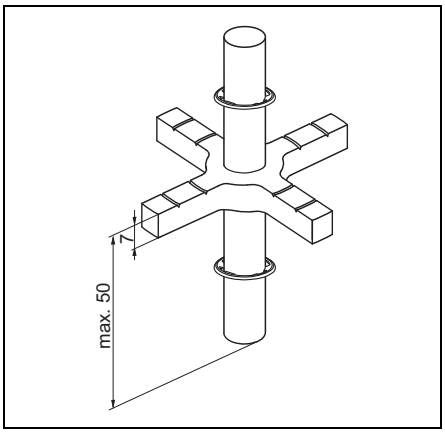

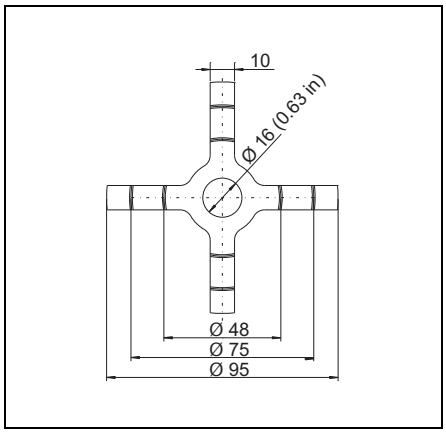

Centering disk PFA Ø1.46 inch

The centering disk is suitable for probes with a rod diameter of 0.63 inch (also coated rod probes) and can be used in pipes from DN40 (1½") upto DN50 (2"). See also Operating Instruction BA00378F/00/EN.

- Measuring range: -200 °C to +150 °C

Order-no. 71069065

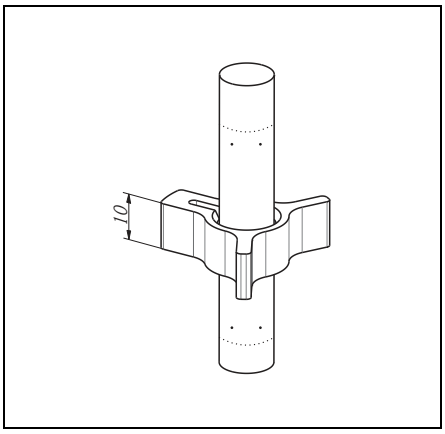

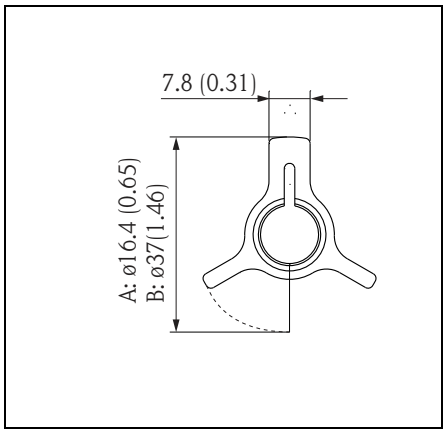

Commubox FXA195 HART

For intrinsically safe HART communication with FieldCare via the USB interface.
For details refer to TI00404F/00/EN.

Commubox FXA291

The Commubox FXA291 connects Endress+Hauser field devices with a CDI interface (= Endress+Hauser Common Data Interface) to the USB port of a personal computer or laptop.
For details refer to TI00405C/07/EN.

Note!
For the device you need the "ToF adapter FXA291" as an additional accessory.

ToF adapter FXA291

The ToF adapter FXA291 connects the Commubox FXA291 via the USB port of a personal computer or laptop to the device. For details refer to KA00271F/00/A2.

Mounting-kit isolated (FMP45)

Mounting-kit	Order-No.
for 4mm rope probe	52014249
for 6mm rope probe	52014250

If a rope probe has to be fixed and a secure grounded mounting is not possible, we recommend using the insulating sleeve made of PEEK GF-30 with accompanying DIN 580 eye-bolt made of stainless steel.
Max. process temp. 150 °C.

Due to the risk of electrostatic charge, the insulating sleeve is not suitable for use in hazardous areas. In these cases the fixing must be reliably grounded (→ 🖹 33).

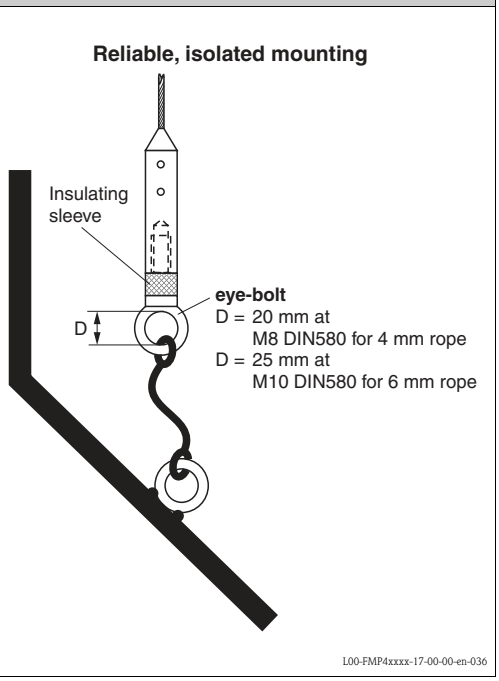

Special process connection (only FMP45)

Fisher flange 249B/259B (MVTF N0123)

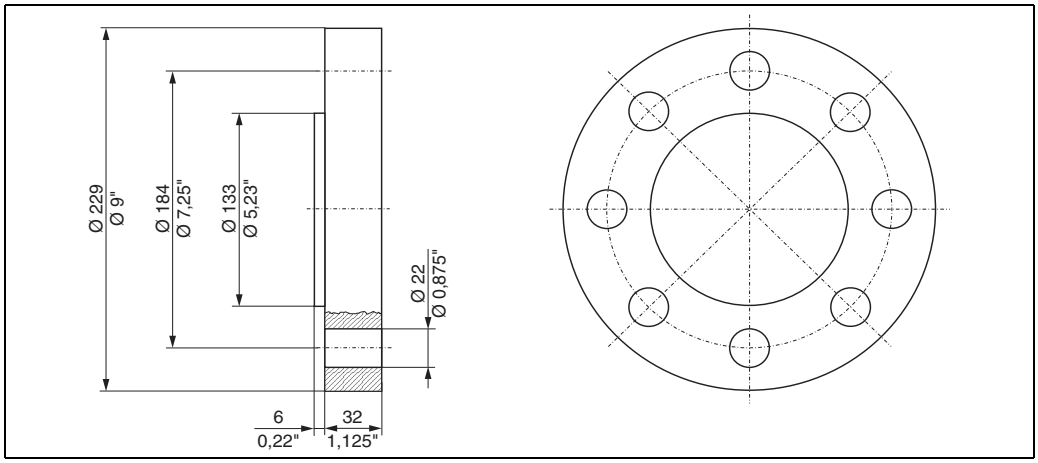

L00-FMP45xxx-00-00-06-en-001

Fisher flange 249C (MVTF N0124)

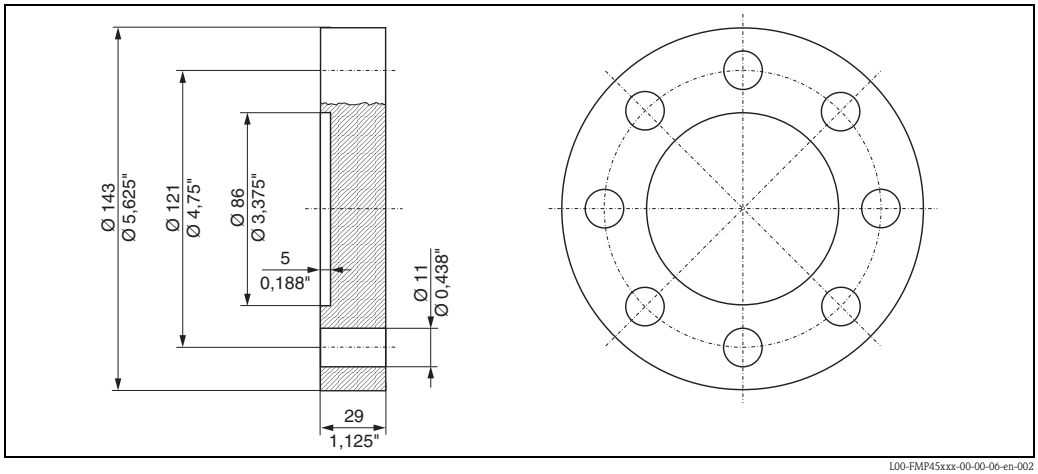

L00-FMP45xxx-00-00-06-en-002

Masoneillan flange (MVTF N0125)

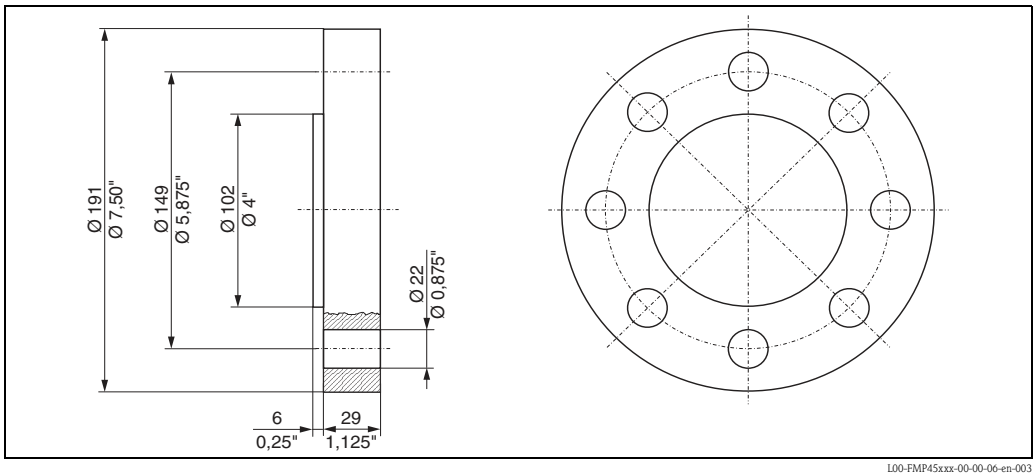

L00-FMP45xxx-00-00-06-en-003

Additional documentation

This Additional documentation can be found on our product pages on "www.endress.com".

Special Documentation

Time of Flight Liquid Level Measurement

Selection and engineering for the process industry, SD00157F/00/EN.

Radar Tank Gauging brochure

For inventory control and custody transfer applications in tank farms and terminals, SD00001V/00/EN.

Safety instructions for steam boiler approval

Guided level radar as limiting for high level water and low level water, SD00288F/00/EN.

Technical Information

Tank Side Monitor NFR590

Technical Information for Tank Side Monitor NRF590, TI00402F/00/EN.

Fieldgate FXA520

Technical Information for Fieldgate FXA520, TI00369F/00/EN.

Operating Instructions

Levelflex M

Correlation of operating instructions to the device:

Device	Output[1)]	Communication	Operating Instructions	Description of Device Functions	Brief Operating Instructions (in the device)
FMP41C	B, G, H	HART	BA00276F/00/EN	BA00245F/00/EN	KA00189F/00/A2
	D	PROFIBUS PA	BA00277F/00/EN	BA00245F/00/EN	KA00189F/00/A2
	F	FOUNDATION Fieldbus	BA00278F/00/EN	BA00245F/00/EN	KA00189F/00/A2
	K	HART (interface)	BA00364F/00/EN	BA00366F/00/EN	KA00283F/00/A2
FMP45	B, G, H	HART	BA00279F/00/EN	BA00245F/00/EN	KA00189F/00/A2
	D	PROFIBUS PA	BA00280F/00/EN	BA00245F/00/EN	KA00189F/00/A2
	F	FOUNDATION Fieldbus	BA00281F/00/EN	BA00245F/00/EN	KA00189F/00/A2
	K	HART (interface)	BA00365F/00/EN	BA00366F/00/EN	KA00283F/00/A2

1) Assignment, see ordering information: 40 electronic insert/communication.

Tank Side Monitor NFR590

Operating Instructions for Tank Side Monitor NRF590, BA00256F/00/EN.
Description of Instrument Functions for Tank Side Monitor NRF590, BA00257F/00/EN.

Engineering hints PROFIBUS PA

Guidelines for planning and commissioning, BA034S/04/EN.

Manufacturer declaration

Permitted pressures, temperatures and load cycles as per EN 13445 and AD- data sheet S2 (for FMP45).

Instruments International

Endress+Hauser
Instruments International AG
Kaegenstrasse 2
4153 Reinach
Switzerland

Tel.+41 61 715 81 00
Fax+41 61 715 25 00
www.endress.com
info@ii.endress.com

Endress+Hauser

People for Process Automation

TI00386F/00/EN/17.12
71198461
FM+SGML 9

71198461