Level | Pressure | Flow | Temperature | Liquid Analysis | Registration | Systems Components | Services | Solutions

Technical Information

Ecograph T

Multi Channel Recorder RSG30
Display, record, communicate



Applications

The instrument can be used in many processes and industries:

- Quality and quantity monitoring in the water/ wastewater industry
- Monitoring of processes in power stations
- Food and dairy industry processes
- Displaying and recording critical parameters in production cycles
- Tank and level monitoring
- Temperature monitoring in metal working
- Cold storage and transportation monitoring

Your benefits

- Informative: interim, daily, monthly and yearly analysis; counters, operation time and quantities; min-, max- and average value recording
- Versatile: up to 6 universal inputs record all measuring signals
- Clear layout: multi-coloured display, digital, bargraph and curve display
- Compact: low installation depth, saves space and money
- Safe: reliable data archiving with internal memory and separate CompactFlash card (mechanically locked). No data loss even in event of power failure!
- System-enabled: network integration and remote data transmission via Ethernet, RS232/RS485 (modem) and USB
- Available worldwide: integrated Web server function for remote monitoring e.g. with E+H Fieldgate Viewer®
- Intelligent: calculations by mathematic functions
- Reliable: inputs are galvanically isolated from the system
- Complete: ReadWin® 2000 PC software package contained in scope of supply for professional, tamper-proof data processing
- Flexible: direct access to archived data also with MS® Excel, in ReadWin® 2000 or in the SQL based Field Data Manager Software for example

TI115R/09/en
No. 51009568

Endress+Hauser
People for Process Automation

Function and system design

Measuring principle

Electronic acquisition, display, recording, analysis, remote transmission and archiving of analog and digital input signals.

Measuring system

Multi-channel data recording system with multi-coloured LCD display (120 mm / 4.7" screen size), galvanically isolated universal inputs (U, I, TC, RTD), digital input, transmitter power supply, limit relay, communication interfaces (USB, Ethernet, RS232/485), internal Flash memory and CompactFlash card. 100 ms scan rate for all channels. ReadWin® 2000 PC software for comprehensive offline device configuration and data analysis, Field Data Manager Software for SQL assisted data analysis at a PC.

Block diagram

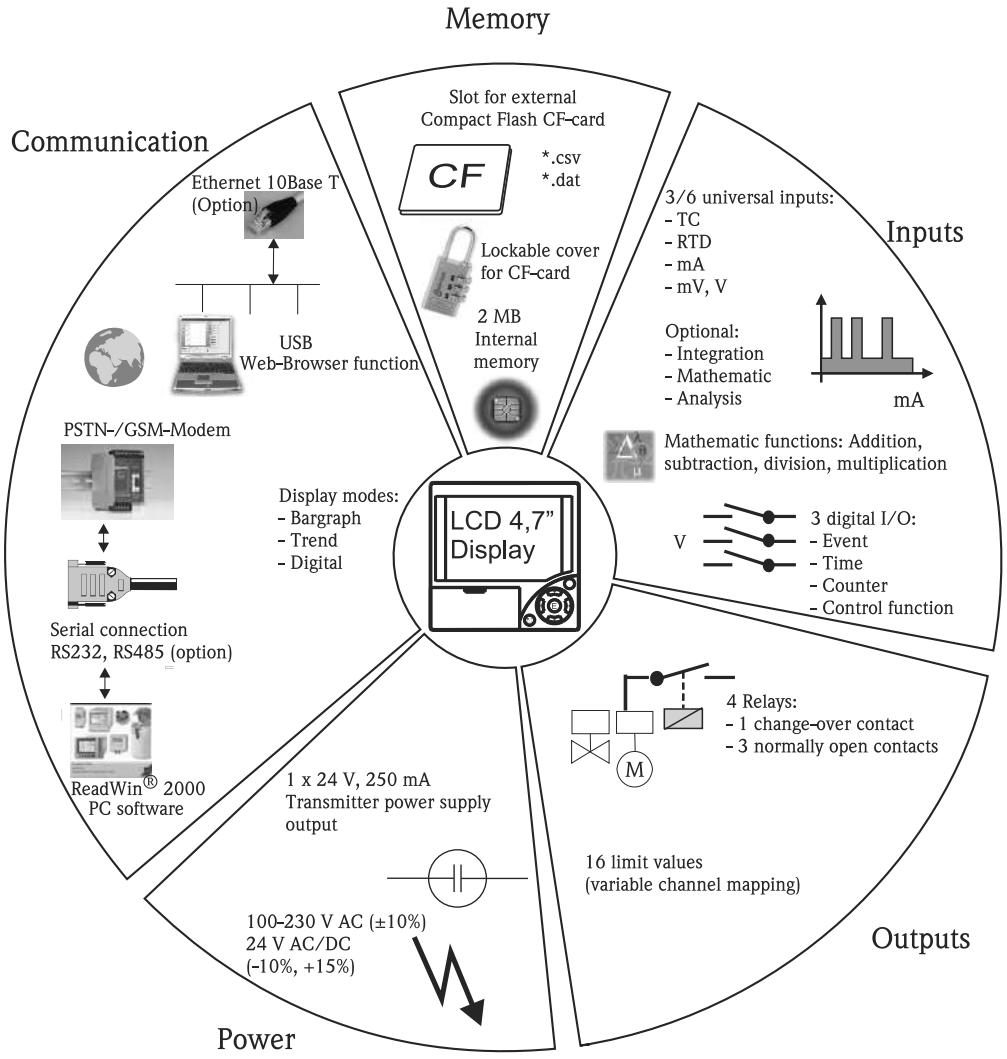

This block diagram is only indicative of the functionality.

Input

Analog multi-function input channel 1-6

Measured variable, measuring range

To IEC 60873-1:
An additional display error of -/+ 1 digit is permitted for every measured value.
Measuring ranges which can be selected per channel:

Measured variable	Measuring range	Maximum measured error of measuring range (oMR)	Input impedance
Current	0...20 mA 0...5 mA 4...20 mA Overrange: up to 22 mA	± 0.10 %	Load: = 50 Ohm
Voltage > 1 V	0...10 V 0...5 V 1...5 V ± 10 V ± 30 V	± 0.10 %	≃ 980 kOhm
Voltage ≤ 1 V	0...1 V ± 1 V ± 150 mV	± 0.10 %	≃ 2.7 MOhm
Resistance thermometer (RTD)	Pt100: -200 to 850 °C (-328 to 1562 °F) (IEC751, JIS1604, GOST) Pt500: -200 to 850 °C (-328 to 1562 °F) (IEC751, JIS1604) Pt1000: -200 to 600 °C (-328 to 1112 °F) (IEC751, JIS1604)	4-wire: ± 0.10 % oMR 3-wire: ± (0.10 % oMR + 0.8 K) 2-wire: ± (0.10 % oMR + 1.5 K)	
	Cu100: -200 to 200 °C (-328 to 392 °F) (GOST) Cu50: -200 to 200 °C (-328 to 392 °F) (GOST) Pt50: -200 to 850 °C (-328 to 1562 °F) (GOST)	4-wire: ± 0.20 % oMR 3-wire: ± (0.20 % oMR + 0.8 K) 2-wire: ± (0.20 % oMR + 1.5 K)	
	Cu53: -50….180 °C (-58 bis 356 °F) (GOST) Pt46: -200 to 650 °C (-328 to 1202 °F) (GOST)	4-wire: ± 0.30 % oMR 3-wire: ± (0.30 % oMR + 0.8 K) 2-wire: ± (0.30 % oMR + 1.5 K)	
Thermocouples (TC)	Type J (Fe-CuNi): -210 to 999.9 °C (-346 to 1832 °F) (IEC581-1) Type K (NiCr-Ni): -200 to 1372 °C (-328 to 2501.6 °F) (IEC581-1) Type T (Cu-CuNi): -270 to 400 °C (-454 to 752 °F) (IEC581-1) Type N (NiCrSi-NiSi): -270 to 1300 °C (-454 to 2372 °F) (IEC581-1) Type L (Fe-CuNi): -200 to 900 °C (-328 to 1652 °F) (DIN43710, GOST)	± 0.10 % oMR from -100 °C (-148 °F) ± 0.10 % oMR from -130 °C (-202 °F) ± 0.10 % oMR from -200 °C (-328 °F) ± 0.10 % oMR from -100 °C (-148 °F) ± 0.10 % oMR from -100 °C (-148 °F)	≃ 2.7 MOhm
	Type D (W3Re-W25Re): 0 to 2315 °C (32 to 4199 °F) (ASTME998) Type C (W5Re-W26Re): 0 to 2315 °C (32 to 4199 °F) (ASTME998) Type B (Pt30Rh-Pt6Rh): 0 to 1820 °C (32 to 3308 °F) (IEC581-1) Type S (Pt10Rh-Pt): 0 to 1768 °C (32 to 3214 °F) (IEC581-1) Type R (Pt13Rh-Pt): -50 to 1768 °C (-58 to 3214 °F) (IEC581-1)	± 0.15 % oMR from 500 °C (932 °F) ± 0.15 % oMR from 500 °C (932 °F) ± 0.15 % oMR from 600 °C (1112 °F) ± 0.15 % oMR from 100 °C (212 °F) ± 0.15 % oMR from 100 °C (212 °F)	≃ 2.7 MOhm

Limit values

Limit values for input voltage and current as well as cable open circuit detection/line influence/temperature compensation

Measured variable	Limit values (steady-state, without destroying input)	Cable open circuit detection/line influence/temperature compensation
Current	Maximum permitted input voltage: 2.5 V Maximum permitted input current: 50 mA	4...20 mA range with cable open circuit monitoring to NAMUR NE43. Activate/deactivate the 4...20 mA loop monitoring as per NAMUR recomendation NE43. On activation: ≤ 3.8 mA: Under range (indicate: vvvvvv) ≥ 20.5 mA: Over range (indicate: ^^^^^^) ≤ 3.6 mA or ≥ 21.0 mA: Open Circuit (indicate: - - - -)
Voltage > 1 V	Maximum permitted input voltage: 35 V	1...5 V range with cable open circuit monitoring: < 0.8 V or > 5.2 V: Open Circuit (indicate: - - - -)
Voltage ≤ 1 V	Maximum permitted input voltage: 12 V	

Measured variable	Limit values (steady-state, without destroying input)	Cable open circuit detection/line influence/temperature compensation
Resistance thermometer (RTD)	Measuring current: ≤ 1 mA	Disengageable cable open circuit detection Maximum barrier resistance (or line resistance): Max. 200 Ohm (4-wire) Max. 40 Ohm (3-wire) Maximum influence of barrier resistance (or line resistance) for Pt100, Pt500 and Pt1000: 4-wire: ±0.0002%/Ohm, 3-wire: ±0.002%/Ohm Maximum influence of barrier resistance (or line resistance) for Pt46, Pt50, Cu100, Cu50 and Cu53: 4-wire: ±0.0006%/Ohm, 3-wire: ±0.006%/Ohm
Thermocouples (TC)	Maximum permitted input voltage: 12 V	Disengageable cable open circuit detection from 50 kOhm Error, internal temperature compensation: ≤ 2 K

Channel isolation

All analog inputs are galvanically isolated from one another. The testing voltage between the channels is 500 V (no safety isolation)

Scan rate

All channels are scanned within 100 ms.

Resolution

For all ranges: ≥ 18 bit

Integration, analysis, mathematic (option package)

Integration (Quantity calculation of analog channels): It is possible to calculate an intermediate, daily, monthly, yearly or total value (13-digit, 64 bit).

Analysis: Quantity-/operating time recording (standard function), additionally a min/max/average value evaluation within the preset period.

Mathematic: Up to 5 mathematics channels. Mathematic calculation of analog channels using basic arithmetic operands (+, -, *,/), constants. In addition either the sum or the average value of several channels can be calculated. If the mathematics channel is used then 1 analog channel is lost.

Digital inputs

Number

3 digital inputs

Input level

To IEC 61131-2:
Logical "0" (corresponds to -3 to +5 V), activation with logical "1" (corresponds to +12 to +30 V)

Input frequency

Max. 25 Hz

Pulse length

Min. 20 ms

Input current

Max. 2 mA

Input voltage

Max. 32 V (steady-state, without destroying input)

Selectable functions

Control input, ON/OFF message, pulse counter (13-digit, 64 bit), operating time, message+operating time. Functions of the control input: start recording, rear illumination OFF, setup lock, time synchronization.

Output

Auxiliary voltage output

The auxiliary voltage is provided to activate the digital input (or sensors) with floating contacts and is galvanically isolated from the system and the inputs (testing voltage 500 V). The ground of the auxiliary voltage and the ground of the digital input are electrically interconnected.

Output voltage:

Approx. 24 V, max. 28 V

Output current:

Maximum 250 mA, short-circuit proof, not stabilised

Relay outputs

Alarm relay:

1 Alarm relay with changeover contact

Standard relay:

3 relays with NO contact for limit value messages (can be configured as NC contact).



Note!
It is not permitted to mix low voltage and safety extra low voltage (do not mix SELV circuits and low voltage).

Response time:

≤ 1 s

Maximum DC contact load:

50 V / 300 mA (steady-state, without destroying input)

Maximum AC contact load:

230 V / 3 A (steady-state, without destroying input)

Power supply / terminal diagram

Electrical connection (wiring diagram)

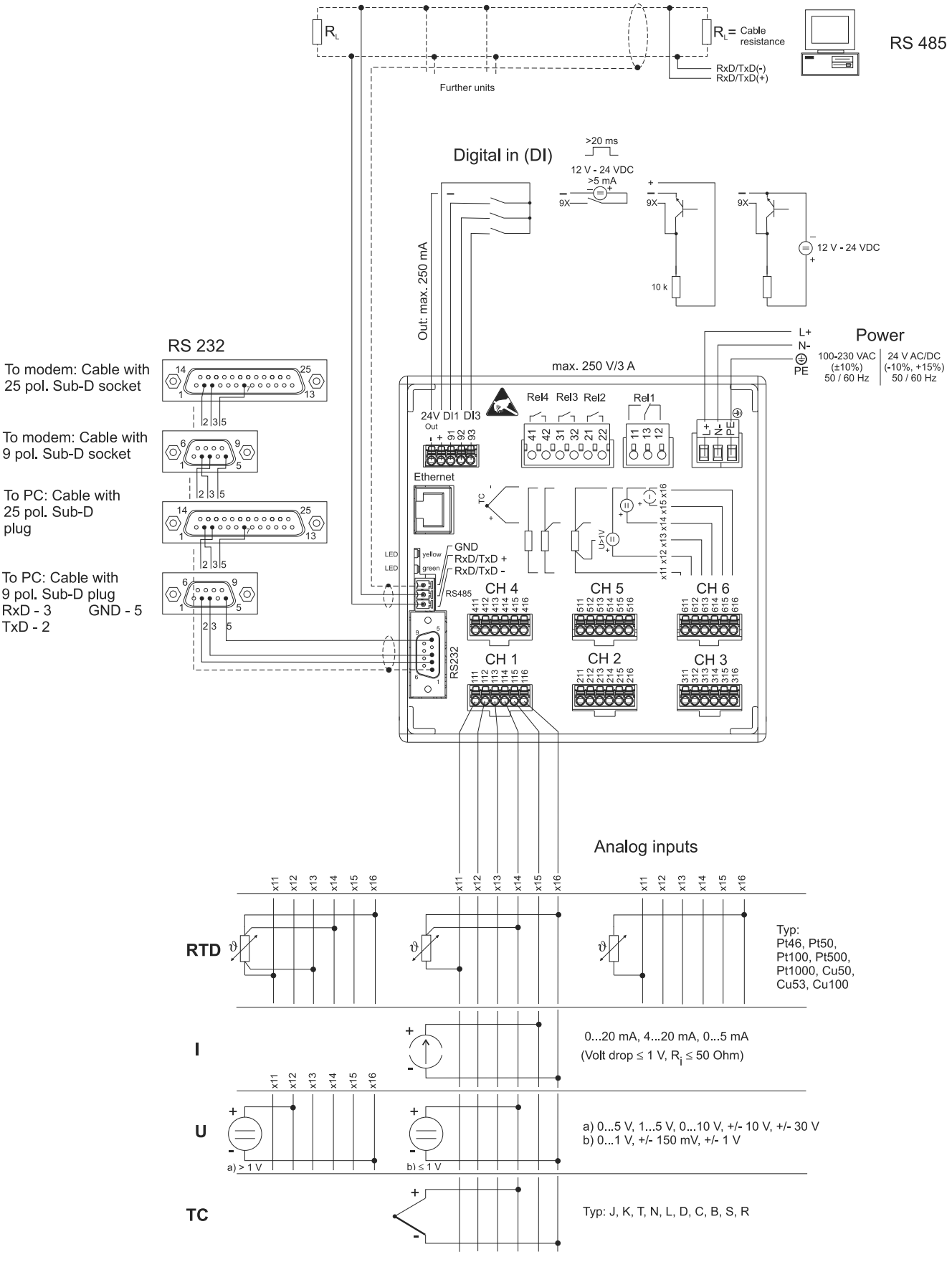

Supply voltage	Low voltage power supply: 100...230 V_{AC} (±10%) Extra-low voltage power supply: 24 $V_{AC/DC}$ (-10%, +15%)
Frequency	Nominal frequency: 50 / 60 Hz
Cable specification	Screw or spring terminal blocks with reverse polarity protection: Digital I/O wire cross-section, RS485 and analog inputs: max. 1.5 mm^2 (14 AWG) (spring terminals) Power wire cross-section: max. 2.5 mm^2 (13 AWG) (screw terminals) Relay wire cross-section: max. 2.5 mm^2 (13 AWG) (spring terminals)
Power consumption	100...230 V: max. 30 VA 24 V: max. 24 VA
Connection data interface, communication	**USB port (standard):** Front-mounted USB-B socket (V1.1) for connecting a laptop or computer using a shielded USB cable. The USB port can be used for program transmission and unit configuration (printers or modems cannot be connected here). **Ethernet interface (option):** Rear-mounted Ethernet interface 10BaseT, plug type RJ45, connection via shielded cable, allocation of IP address via setup menu in unit. The unit can be connected to units in an office environment with this interface. For safe spacing distances, observe the office equipment standard IEC 60950-1. Direct connection to a PC is possible with a "crossover" cable. The unit can be used in the network as a "Web server". Two Ethernet function LEDs on the rear of the unit. **Serial RS232/RS485 interface (option):** Rear-mounted RS232 SUB-D9 socket or RS485 interface (terminal connection) for data/program transmission or as modem connection. The following baudrates are supported: 1200, 2400, 4800, 9600, 19200, 38400, 57600, 115200 Max. line length with shielded cable: 2 m (6.6 ft) (RS232), or 1000 m (3281 ft) (RS485) Both interfaces are galvanically isolated from the system. The RS232/RS485 interfaces cannot be used simultaneously.

Performance characteristics

Reference operating conditions	Ambient temperature: 25 °C ± 5 K (77 °F ± 9 °F) Air humidity: 55 % ± 10 % r.h.
Maximum measured error	(See Input)
Temperature drift	Cu100, Cu50, Cu53, Pt46 and Pt50: max. ± 0.02 %/K (of measuring range) All other ranges: max. ± 0.01 %/K (of measuring range)
Long-term drift	To IEC 61298-2: max. ± 0.01 %/month (of measuring range)

Installation conditions

Orientation

Position of use as per DIN 16 257, NL 90 ± 30°

Installation instructions

Panel cutout and installation / design, dimensions:

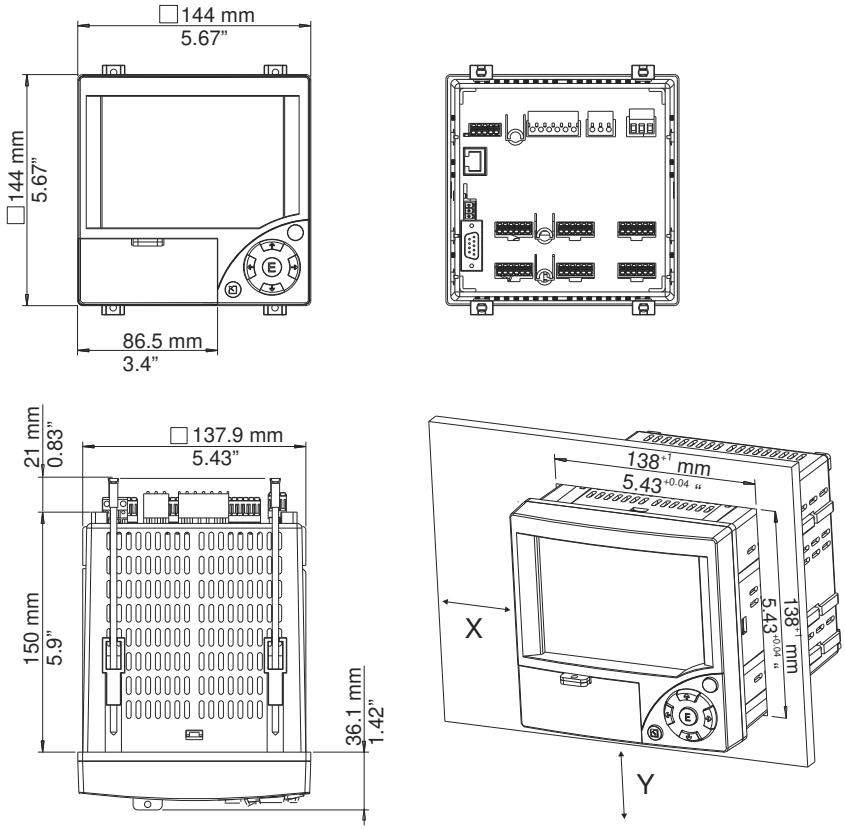

- Installation depth: approx. 171 mm (6.73 inch) (incl. terminals and fastening clips)
- Panel cutout: 138^{+1} x 138^{+1} mm ($5.43^{+0.04}$ x $5.43^{+0.04}$ inch)
- Panel thickness: 2 to 40 mm (0.08 to 1.57 inch)
- Maximum point of view range: From the display center 50° to the left and right, 20° upward, 30° downward.
- Securing to DIN 43 834

Note!
A distance of min. 15 mm (0.59 in) between the units has to be observed if aligning the units in the Y-direction (vertically above one another).
The units can be arranged horizontally beside one another in the X direction without any spacing between the units.

Environment

Ambient temperature range

0 to 50 °C (32 to 122 °F)

Storage temperature

-20 to +60 °C (-4 to 140 °F)

Relative air humidity

0 to 50 °C (32 to 122 °F), max. 75% humidity without condensation.

Climate class

To IEC 60654-1: B1

Degree of protection	Front-panel IP 54 (IEC 60529, Cat. 2) NEMA 2 rear-panel IP 20 (IEC 60529, Cat. 2)
Electrical safety	IEC 61010-1, protection class I Low voltage: overvoltage category II Environment < 3000 m (< 9843 ft) above MSL (mean sea level)
Electromagnetic compatibility (EMC)	**Interference immunity:** To IEC 61326: Class B (industrial environment) and NAMUR NE21: ■ ESD (electrostatic discharge): IEC 61000-4-2 severity 3 (6/8 kV) ■ HF field (electromagnetic interference fields): IEC 61000-4-3: severity 3 (10 V/m) ■ Burst (quick transient disturbance variables): IEC 61000-4-4 severity 3 (1 kV signal, 2 kV power supply) ■ Surge on power line: IEC 61000-4-5: 2 kV asymmetrical, 1 kV symmetrical ■ Surge on signal line: IEC 61000-4-5: 1 kV asymmetrical (with external protection element) ■ Conducted HF: IEC 61000-4-6: 150 kHz to 80 MHz, 10 V ■ Power failure: IEC 61000-4-11 (> 20 ms/0%) ■ Voltage variation: IEC 61000-4-11 (40% / 0%) **Emission:** To IEC 61326: Class A (operation in industrial environment) **Interference voltage:** Power line: To CISPR 16-1/-2: Class A **Interference current:** Ethernet line: To EN 50022: Class A **Interference field intensity:** Housing/all connections: to CISPR 16: Class A **Interference voltage suppression:** ■ Common mode interference voltage suppression: IEC 61298-3: Analog inputs: 80 dB at 60 V and 50 Hz / 60 Hz ■ Push-pull interference voltage suppression: IEC 61298-3: Analog inputs: 40 dB at 50 Hz / 60 Hz, for measuring range/10

Mechanical construction

Design, dimensions	See Installation conditions
Weight	Panel-mounted instrument: approx. 700 g (1.54 lb)
Materials	Front frame / removable media door: plastic (ABS) Housing: fibre-glass reinforced plastic (PC) Protective cover in front of display: plastic (PC)

Human interface

Display elements	**Type:** LC color graphic display **Size (screen size, measured diagonally):** 120 mm (4.7")

Resolution:

76,800 pixels (320 x 240 pixels)

Rear illumination:

50,000 h half value time (= half brightness)

Number of colors:

64 colors

Point of view:

Maximum point of view range: From the display center 50° to the left and right, 20° upward, 30° downward.

Display modes:

Curves/load curves, curves in ranges, digital display, bar graph, events list (set points/power failure), status display, history display in curve form with display of digital measured values, date and time

Operating elements

Keyboard:

Option of operation and configuration via 7 push buttons on the front side in interactive dialog with the screen or using the provided PC software. Display of integrated operating instructions at the push of a button.

Data storage

Save cycle:

- Selectable save cycle: 1s / 2s / 3s / 4s / 5s / 10s / 15s / 20s / 30s / 1min / 2min / 3min / 4min / 5min / 10min / 30min / 1h

Selected save cycle	Equal to a feed rate in mm/h	Equal to a feed rate in inch/h
1s	1000	40
2s	600	24
3s	300	12
4s	240	10
10s	120	4.8
20s	60	2.4
30s	30	1.2
1min (60s)	20	0.8
2min (120s)	10	0.4
4min (240s)	5	0.2

Internal memory:

- Program memory: 2 MB Flash (nonvolatile)
- Setup data memory, measured data memory: permanent back-up of setup data and measured data in internal Flash memory (nonvolatile)
- Main memory: 2 MB SRAM
  Data buffering and RTC buffering with lithium cell (replace after 10 years)

External memory:

- Cyclic copying of the measured data for archiving on CompactFlash card
  (CompactFlash base: type I)
- Supported CF memory cards : 32 MB, 64 MB, 128 MB, 256 MB and 512 MB. Please use the CF memory cards recommended by the manufacturer (see "Accessories").

- A green LED beside the CF slot indicates data access. During this process, the CF card must not be removed. Risk of losing data!

Typical recording lengths:

Requirements for the following tables:

- No alarm point violation/event storage
- Digital input not used
- Signal analysis deactivated

✎ Note!
Frequent entries in the events list reduce the memory availability!

Internal memory (weeks = w, days = d, hours = h):

Analog inputs	Save cycle 5 min.	Save cycle 1 min.	Save cycle 30 s.	Save cycle 10 s.	Save cycle 1 s.
1	68 w, 5 d, 0 h	15 w, 1 d, 23 h	7 w, 4 d, 11 h	2 w, 3 d, 19 h	1 d, 18 h
3	34 w, 2 d, 12 h	7 w, 1 d, 20 h	3 w, 4 d, 10 h	1 w, 1 d, 11 h	20 h
6	19 w, 4 d, 10 h	4 w, 0 d, 11 h	2 w, 0 d, 5 h	4 d, 17 h	11 h

CompactFlash 128 MB (weeks = w, days = d, hours = h):

Analog inputs	Save cycle 5 min.	Save cycle 1 min.	Save cycle 30 s.	Save cycle 10 s.	Save cycle 1 s.
1	5738 w, 6 d, 14 h	1276 w, 4 d, 7 h	638 w, 2 d, 3 h	212 w, 5 d, 9 h	21 w, 1 d, 22 h
3	2869 w, 4 d, 2 h	606 w, 4 d, 10 h	303 w, 2 d, 5 h	101 w, 0 d, 17 h	10 w, 0 d, 18 h
6	1639 w, 6 d, 0 h	339 w, 4 d, 18 h	169 w, 5 d, 21 h	56 w, 4 d, 7 h	5 w, 4 d, 15 h

CompactFlash 256 MB (weeks = w, days = d, hours = h):

Analog inputs	Save cycle 5 min.	Save cycle 1 min.	Save cycle 30 s.	Save cycle 10 s.	Save cycle 1 s.
1	11526 w 3 d, 0 h	2564 w, 0 d, 5 h	1282 w, 0 d, 2 h	427 w, 2 d, 8 h	42 w, 5 d, 3 h
3	5763 w, 3 d, 2 h	1218 w, 2 d, 20 h	609 w, 1 d, 10 h	203 w, 0 d, 11 h	20 w, 2 d, 3 h
6	3293 w, 4 d, 3 h	682 w, 1 d, 16 h	341 w, 0 d, 20 h	113 w, 4 d, 22 h	11 w, 2 d, 14 h

Calculation of recording duration:

Calculation of recording duration using "storage calculator" (can be found under "tools" on the CD-ROM of the PC software supplied).

Real time clock (RTC)

Switchable summer time/normal time automated system
Power reserve: buffering via lithium battery
Deviation: < 10 min./year
Time synchronization possible

Remote operation

Configuring and archiving the unit settings with CompactFlash or with supplied PC software via rear-mounted serial interface RS232/RS485 (e.g. modem), Ethernet, or front-mounted USB port.

Certificates and approvals

CE mark	The measuring system meets the legal requirements of the EC directives. The manufacturer confirms successful testing of the device by affixing the CE mark.
UL listed for Canada and USA	The device was examined by Underwriters Laboratories Inc. (UL) in accordance with the standards UL 61010-1 and CSA C22.2 No. 61010-1 and listed under the number E225237 UL.
Other standards and guidelines	CSA approval CAN/CSA-C22.2 No. 61010-1-04 Safety requirements for electrical equipment for measurement, control, and laboratory use - General requirements, Second Edition.

Ordering information

Product structure

Basic features:
4.7" LC colour graphic display (320 x 240 pixels)
Analog inputs, 3 digital inputs, 4 relays
Interactive dialogue operation with 7 push buttons
24 V auxiliary output voltage
USB connection incl. connecting cable
16 limit values, can be freely defined
PC software package
CompactFlash (CF) slot

	Input signal
A	3 universal (U, I, TC, RTD)
B	6 universal (U, I, TC, RTD)

		Power supply
1		100-230 V AC (±10%), 50/60 Hz
2		24 V AC/DC (-10%, +15%), 50/60 Hz

			Interface
A			USB
B			USB + RS232/485 + Ethernet

				Memory medium
1				without CF card
3				CF card industrial grade, 256 MB
4				CF card industrial grade, 128 MB

					Housing
A					Panel 144x144 mm (5.67 x 5.67"), IP54, NEMA 2
C					Desk top, cable plug earth. type
D					Desk top, cable plug US
E					Desk top, cable plug Suisse
F					Field housing, IP65, NEMA 4x

						Operation language
A						Standard (German, English)
B						Central/western Europe (German, English, French, Spanish, Italian, Dutch)
C						Northern Europe (German, English, Danish, Swedish)
D						Eastern Europe (German, English, Polish, Russian, Czech, Slovak)
E						America (German, English, French, Spanish, American, Portuguese)
F						Japan (German, English, Japanese)
G						China (German, English, Chinese)

							Additional option
A							Standard
C							Integration + Analysis + Maths

								Approval
1								Non-hazardous area, standard with logo
2								Non-hazardous area, neutral without label

									Marking
A									Tagging (TAG), metall
C									Commissioning label, paper
F									Tagging (TAG), by customer

RSG30-										⇐ **Order code**

Accessories

Scope of delivery

- Unit (with terminals, as per your order)
- 4 fastening clips
- USB cable
- Optional CompactFlash CF card (CF card is enclosed separately.)
- PC operating and configuration software on CD-ROM
- Delivery note
- Multilanguage Brief Operating Instructions as hard copy
- Operating Instructions on CD-ROM
- locking plate

Anything missing? Then please inform your supplier.

Accessory parts

The following accessories are available:

Order code	Accessory
50078843	Terminal, pluggable, 3-pole, for power supply
51009211	Terminal, pluggable, 6-pole, for analog input
51009214	Terminal, pluggable, 3-pole, for relay
51009215	Terminal, pluggable, 6-pole, for relay
71062537	Terminal, pluggable, 5-pole, for digital I/O
71043991	CompactFlash (CF) memory card 128 MB
51009640	CompactFlash (CF) memory card 256 MB
71007465	Cable USB-A - USB-B, 2 m (6.56 ft)
RXU10-A1	Cable set for connection PC or modem
MS20-	Field Data Manager Software for SQL assisted data analysis at a PC
RSG30A-H1	Field housing IP65 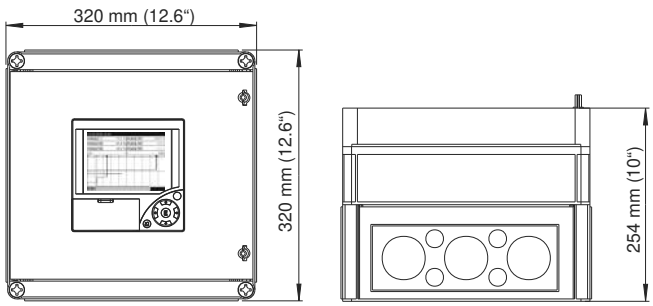

Documentation

❑ Brochure on recording technology (FA014R/09/en)
❑ Operating Instructions (BA194R/09/en)
❑ Brief Operating Instructions (KA199R/09/c5)

Instruments International

Endress+Hauser
Instruments International AG
Kaegenstrasse 2
4153 Reinach
Switzerland

Tel. +41 61 715 81 00
Fax +41 61 715 25 00
www.endress.com
info@ii.endress.com

Endress+Hauser

People for Process Automation

TI115R/09/en/13.10
51009568
FM+SGML 6.0 ProMoDo